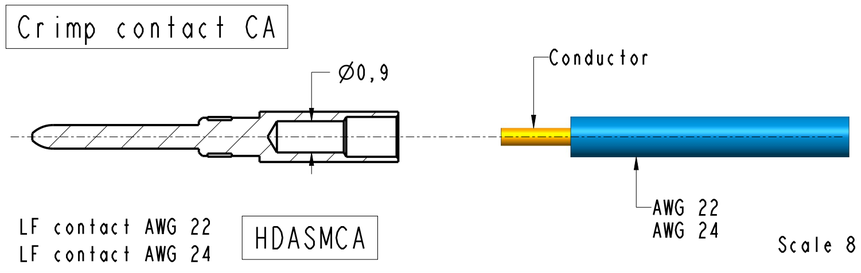

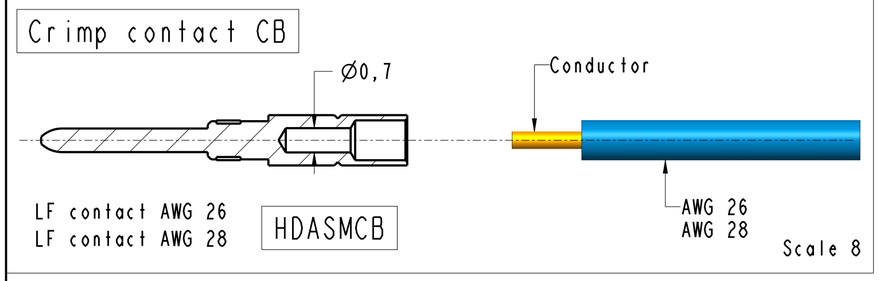

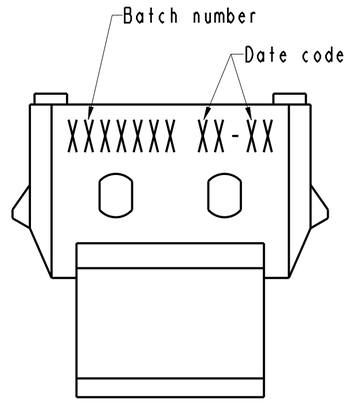

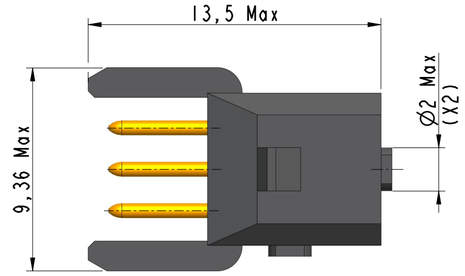

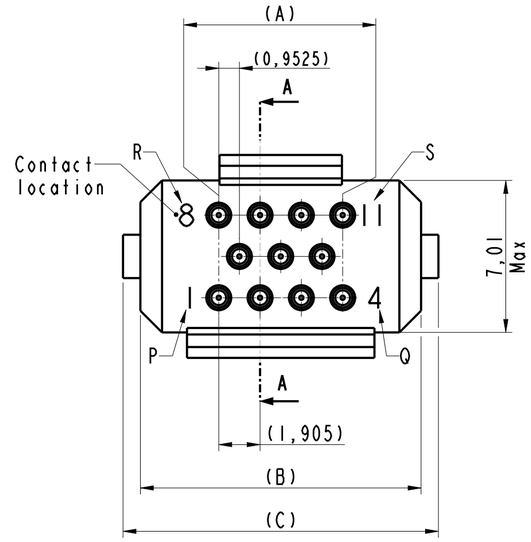

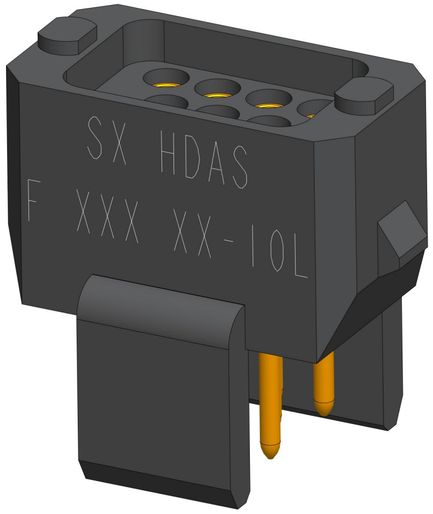

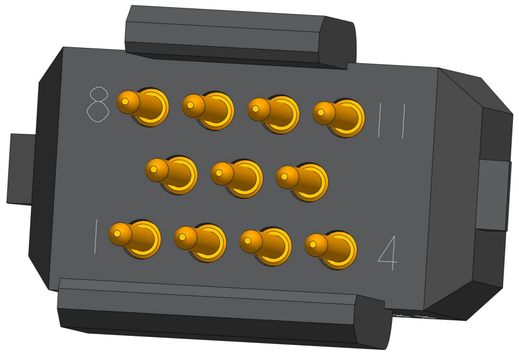

Scale 7

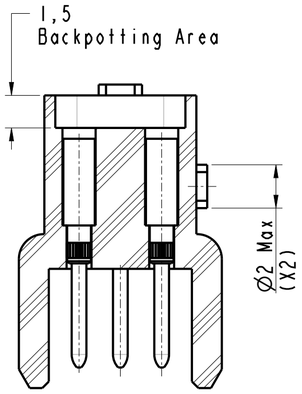

Section A-A

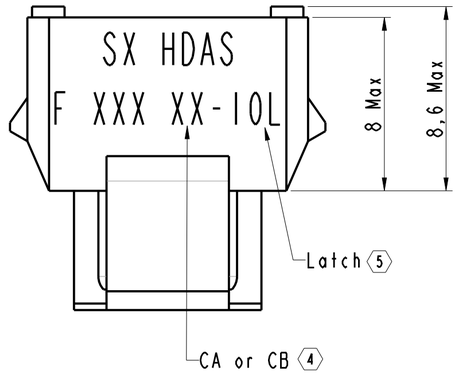

1- This is generic drawing for HDAS crimp plug connector latch version.
II contacts version is represented for example.

2- Designation of part:

HDAS	F	XXX	XX	-10L
		3	4	5

3- Number of crimp contacts : 011, 020, 029, 041

4- Type of LF crimp contacts :
CA: Crimp pin gauge AWG 22-24
CB: Crimp pin gauge AWG 26-28

5- 10L : Stainless steel fitting type Latch

6- Connector delivered with contacts not assembled

7- Insertion tool: HDASODIC , Extraction tool: HDASODEC

8- Reference to crimping, insertion & extraction and potting instruction : PCB-ER-017-EXT, PCB-ER-018-EXT and PCB-ER-019-EXT.

9-To order spare contacts: Part no: HDASMCA (172-PLC-266-00) and
Part no: HDASMCB (172-PLC-267-00)

LF Contacts number	Distance in mm between axes		Length in mm	LF Contacts reference mark number			
XXX	A ±0,2	B ±0,2	C $^{+0}_{-0,2}$	P	Q	R	S
011	5,715	12,95	14,55	1	4	8	11
020	11,43	18,66	20,26	1	7	14	20
029	17,145	24,38	25,98	1	10	20	29
041	24,765	32	33,6	1	14	28	41

Crimp HDAS -Male connector
HDAS F XXX XX-10L

DRAWN BY : S Satpute | UPDATED BY: Amit Patil | LAST APPROVED BY: Kevin Qi

ALL DIMENSIONS ARE IN MM

SCALE : 4

AMPHENOL SOCAPEX
B.P. 29 74311 THYEZ CEDEX

ORIGINAL DRAWING DATE : 23/03/2022

CONFIGURATION DATA ARE AVAILABLE IN PDM

REV : D | PAGE : 1/1

169-PLC-1590-00

EXPORT CONTROL CLASSIFICATION NOT CONTROLLED/EAR99
Information contained in this document is not subject to Export Control Regulations of the European Union, USA or other countries. Each recipient of this document is responsible for ensuring that transfer or use of any information contained in this document complies with all relevant Export Control regulations and EAR99 regulations.

IN THE CONSTANT PURPOSE OF IMPROVING ITS PRODUCTS, Amphenol Socapex RESERVES THE RIGHT TO MODIFY ANY DIMENSION OR CHARACTERISTICS.
FM.NPD.0037.THYEZ.PUNE rev C