ITEM	MOLEX P/N	DESCRIPTION	QTY	UOM
A,B	5046930201	CP 3.3 W/W CONN SglRw Rec Hsg BLACK 2P	2	PC
C	503978000	2.5/3.3 CONN CRIMP RECEPT (CHAIN)	4	PC
D	5046950207	CP 3.3 W/W CONN. RETAINER BROWN 2P	2	PC
PL	--	PART ID LABEL	1	PC

FROM	TO	WIRE SIZE	WIRE TYPE	COLOR
A-1	B-1	22 AWG	UL 1007	BLACK
A-2	B-2	22 AWG	UL 1007	BLACK

TABLE 1		
LABEL ID	LABEL CONTENT	REMARK
PL	MOLEX PN MOLEX BATCH WK/YR	LABEL TEXT MUST BE 2MM MAX IN HEIGHT WITH ARIAL FONT AND WRAPPED IN A FLAG TYPE ON A SINGLE WIRE.

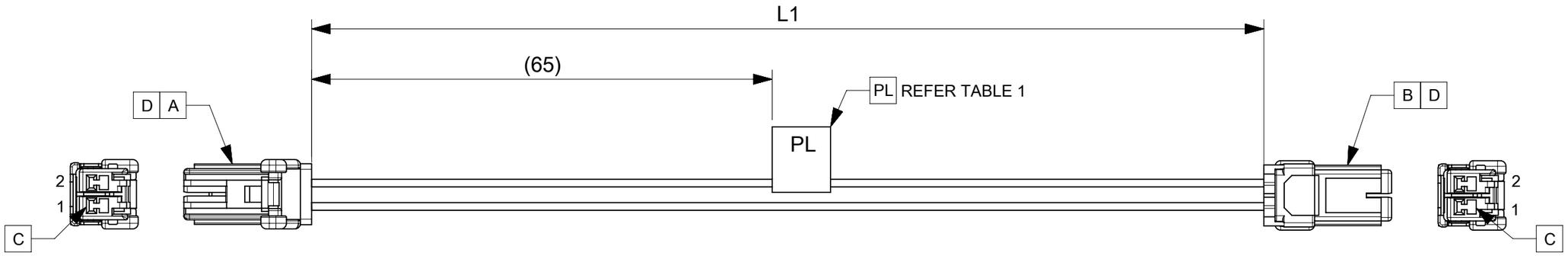

TABLE		
FG PART #	L1	TITLE
2317502022	150±5	CP3.3 CA R-R 2CKT 22AWG 150MM
2317504022	450±5	CP3.3 CA R-R 2CKT 22AWG 450MM

NOTE:
1. CONNECTOR VIEW/CIRCUIT NOS SHOWN FROM THE MATING SIDE OF THE CONNECTOR, CONNECTOR VIEW IS SHOWN ONLY FOR REFERENCE.

PRODUCT REQUIREMENT		
TEST NAME/COMPONENT NAME	TEST PARAMETER	REQUIREMENT
Continuity/Short/Open	AS PER PIN OUT TABLE	TO BE MET

REVISION	CHANGE NOTE	EC NO	DATE	CUSTOMER P/N	CUSTOMER REV
A	INITIAL RELEASE	ER	7-JAN-2025	NA	NA

REVISION HISTORY

DETAIL	DESCRIPTION	DETAIL	DESCRIPTION
	Continues Taping		PVC sleeve or Silicon sleeve
	HST	13 +5.0 0.0	T Dimension
	Woven Braid		Convoluted Tube
	Spot Taping	CSR	Customer Specific requirements

FUNCTIONAL SYMBOLS: EA = 0, EC = 0, EP = 0

DIVISIONAL SYMBOLS

THIS DRAWING CONTAINS INFORMATION THAT IS PROPRIETARY TO MOLEX ELECTRONIC TECHNOLOGIES, LLC AND SHOULD NOT BE USED WITHOUT WRITTEN PERMISSION

DIMENSION UNITS	SCALE
mm	NTS

GENERAL TOLERANCES (UNLESS SPECIFIED)

ANGULAR TOL	± °
4 PLACES	±
3 PLACES	±
2 PLACES	±
1 PLACE	±
0 PLACES	±

DRAFT WHERE APPLICABLE MUST REMAIN WITHIN DIMENSIONS

CURRENT REV DESC:

EC NO: 844315
DRWN: SRAJAG 2026/01/07
CHK'D: RPAI01 2026/01/08
APPR: RPAI01 2026/01/08

INITIAL REVISION:
DRWN: SRAJAG 2026/01/07
APPR: RPAI01 2026/01/08

molex

SEE TABLE

PRODUCT CUSTOMER DRAWING

DOCUMENT NUMBER	DOC TYPE	DOC PART	REVISION
2317502022	PSD	000	A

THIRD ANGLE PROJECTION	DRAWING	SERIES	MATERIAL NUMBER	CUSTOMER	SHEET NUMBER
	A3-SIZE	231750	SEE TABLE	GENERAL MARKET	1 OF 1

DOCUMENT STATUS	P1	RELEASE DATE	2026/01/08 14:13:52

FORMAT: master-Sheet-A3
REVISION: J1
DATE: 2021/05/07