THIS DRAWING IS SUPPLIED FOR INFORMATION ONLY. DESIGN FEATURES, SPECIFICATIONS AND PERFORMANCE DATA SHOWN HEREON ARE THE PROPERTY OF THE AMPHENOL CORPORATION. NO RIGHTS OF REPRODUCTION ARE IMPLIED. ALL DIMENSIONS ARE SUBJECT TO NORMAL MANUFACTURING VARIATIONS.

Customer Drawing

REVISIONS						
REV	ZONE	ECO	DESCRIPTION	DATE	BY	APPR
B	--	-	修改线缆OD错误	7/06/18	ST	JL
C	--	-	Add Rating Current	10/31/18	ST	JL
D	--	-	Add Model No	02/25/19	ST	JL

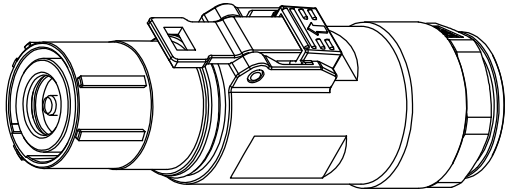

订购信息 Ordering Information

PL18 X - 30 1 - 70 - 5

△C 键位及颜色 Key & Color
- "X", 橙色 Orange
- "Y", 黑色 Black
- "U", 黄色 Yellow
- "V", 绿色 Green
- "W", 红色 Red
- "T", 蓝色 Black

高压互锁 HVIL
- 0 ,不带互锁 No HVIL
- 1 ,带互锁 With HVIL

线缆大小 Cable Size
- "70"=70mm²
- "50"=50mm²
- "35"=35mm²

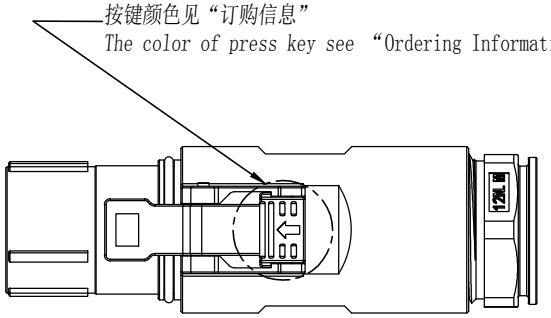

△D

Model NO.	overall-diameter nominal(mm)	Dia Primary Insuulation(mm)	outside-diameter of terminal(mm):"A"	inside-diameter of terminal(mm):"B"
PL18X-30()-35-5	12.7±0.3	△B 9.7±0.3	11.8±0.3	8.8±0.3
PL18Y-30()-35-5				
PL18U-30()-35-5				
PL18V-30()-35-5				
PL18W-30()-35-5				
PL18T-30()-35-5				
PL18X-30()-50-5	14.9±0.3	△B 11.5±0.3	14.5±0.3	10.3±0.3
PL18Y-30()-50-5				
PL18U-30()-50-5				
PL18V-30()-50-5				
PL18W-30()-50-5				
PL18T-30()-50-5				
PL18X-30()-70-5	17.0±0.3	△B 13.7±0.3	16.5±0.3	12.5±0.3
PL18Y-30()-70-5				
PL18U-30()-70-5				
PL18V-30()-70-5				
PL18W-30()-70-5				
PL18T-30()-70-5				

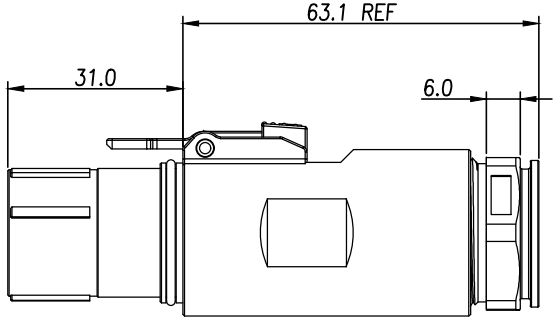

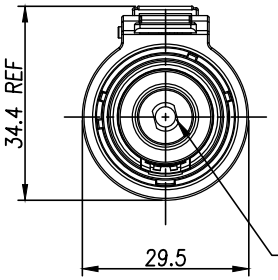

防触摸塑料盖
Touch Proof Pin

规格参数(Spec.):
1. 工作温度 Operating temperature: -40° C~+125° C.
2. 额定电流 Current rating(Connector Only): △C
35mm2-150A,50mm2-200A,70mm2-250 A.
3. 额定电压 Operating voltage:1000 VDC.
4. 耐 电 压 Dielectric withstanding voltage: 5000 VDC.
5. 防护等级 Protection class:IP67 & IP2X.
6. 电磁屏蔽 Shielding.
7. 机械寿命 Mating cycle:100 Min.
8. 带自动二次锁扣 Automatic secondary lock.
9. 带高压互锁 Electrical interlock (HVIL).
10. 配对插座 Mating receptacle : See drawing "PL00-300"

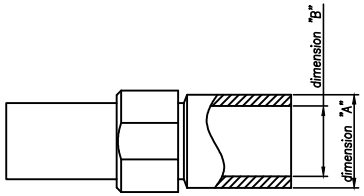

Terminal

AMPHENOL TPI

Amphenol Technical Products International GZ

第三角投影 THIRD ANGLE PROJECTION	页面 SHEET	幅面 SIZE	版次 REV.	比例 SCALE
	1 OF 1	A3	D	

PART NAME: PowerLok 10mm 1POS Plug Assy

签名 SIGNATURE		日期 DATE
制图 DRAWN	Steven	02/25/19
审核 CHECKED		
批准 APPROVAL		

UNLESS OTHERWISE SPECIFIED
1) All dimensions are in metric(mm).
2) Tolerances are as follows:
0 PL DEC ±1.00
1 PL DEC ±0.50
2 PL DEC ±0.20
Angles ±1°

DWG NO: PL18()-30()-()-5

CUST PART #: N/A

CUST REV.: -