CUSTOMER DRAWING

Jesse Hu
2025.12.25 13:53:55 +08'00'

REVISION			
ZONE	REV.	DESCRIPTION	DATE
ALL	A	INITIAL RELEASE	2020-09-08
ALL	B	DESIGN UPDATE	2021-02-01
A1,B1	C	ADD K9 KEYWAY OPTION	2025-09-16
B2,C2,B3	D	ADD 25SQMM OPTION	2025-12-12

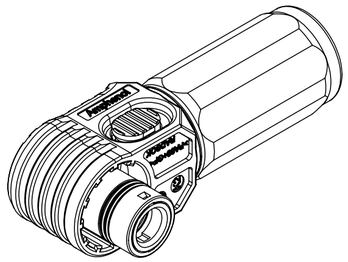

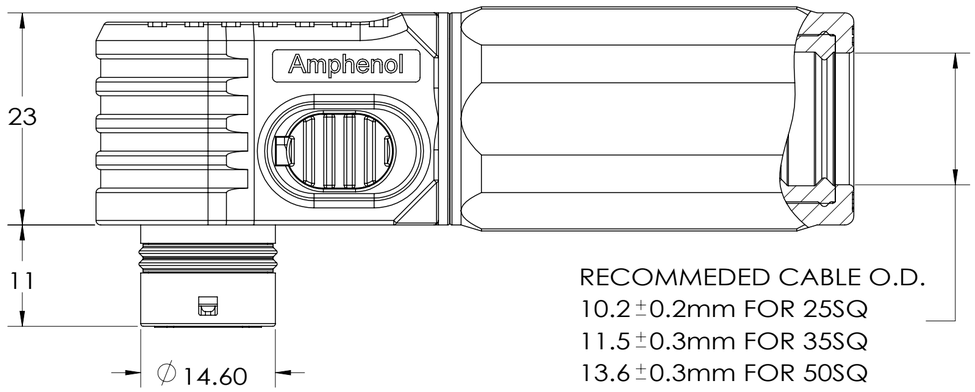

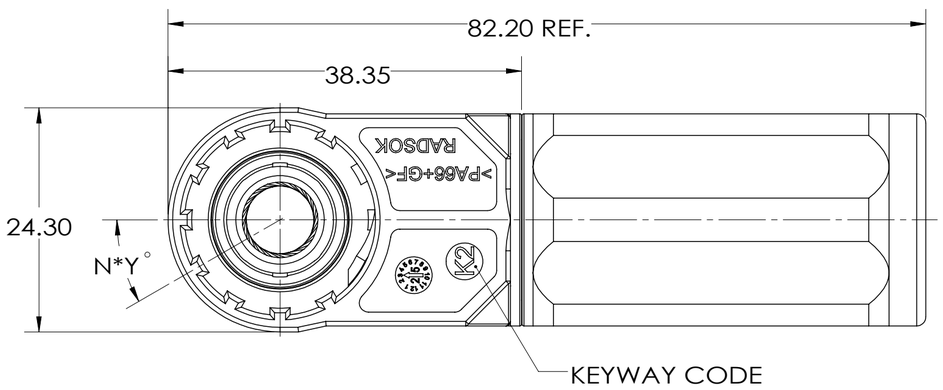

MFG NUMBER: C10-765467-( )( )( )( )

COLOR
WIRE SIZE
SEALING
KEYWAY

CODE NUMBER: SLPHPB ( ) B ( ) ( ) ( )

WIRE SIZE
SEALING
COLOR
KEYWAY

SPECIFICATIONS

CURRENT RATING	200A MAX. FOR 50MM2 150A MAX. FOR 35MM2 120A MAX. FOR 25MM2
OPERATING VOLTAGE	≤1500V DC
OPERATING TEMPERATURE	-40°C~125°C
AMBIENT TEMPERATURE	-40°C~80°C
CONTACT RESISTANCE	≤0.5mΩ
PROTECTION CLASS	IP67(MATED)
DURABILITY	100 CYCLES

D

ITEM	OPTION	CODE NUMBER	MFG NUMBER
COLOR	ORANGE	O	0
	BLACK	B	1
	RED	R	2
WIRE SIZE	50 SQMM	50	0
	35 SQMM	35	3
	25 SQMM	25	2
SEALING	IP67(MATED)	S	0
	NO SEALING	N	1
KEYWAY (Y°)	20°	1	1
	30°	2	2
	22.5°	9	9

D

KEYWAY(Y°)	KEYWAY CODE	N
20°	K1	18
30°	K2	12
22.5°	K9	16

3. THE BENDING RADIUS OF CABLE SHOULD BE GREATER THAN 5 TIMES OF APPLIED CABLE OD.
   THE CABLE SHOULD KEEP STRAIGHT GREATER THAN 20MM FROM THE REAR END OF PLUG.
2. IF CHOOSE NO SEALING TYPE,
   THERE WILL BE NO SEALING RING AND O-RING AND GROMMET.
1. THE REFERENCED PRODUCT SHALL BE COMPLIANT TO RoHS DIRECTIVE.

NOTES

THIS DOCUMENT CONTAINS PROPRIETARY AND CONFIDENTIAL INFORMATION BELONGING TO AMPHENOL CORPORATION OR ITS SUBSIDIARIES. ANY DISCLOSURE OR USE IS PROHIBITED EXCEPT WITH AMPHENOL'S PRIOR WRITTEN CONSENT. ©AMPHENOL CORPORATION. ALL RIGHTS RESERVED.

Next Assembly

UNLESS OTHERWISE SPECIFIED
LINEAR DIMENSIONS ARE IN MILLIMETERS
TOLERANCES:

DIM. RANGE	0.5-3	>3-6	>6-30	>30-120	>120-400
TOLERANCE	±0.1	±0.1	±0.2	±0.3	±0.5

ANGLES = ±2°
DIM. & TOL. PER ASME Y14.5M-1994;
DRM PER MIL-DTL-31000;
OTHER AMPHENOL STANDARDS: 9-9318
THIRD ANGLE PROJECTION

APPROVALS		DATE
PREPARED BY:	SEVEN XIE	2020/09/28
LEAD/PRODUCT ENGINEER:	SEVEN XIE	
ENGINEERING MANAGER:	ROB WENG	
PRODUCT GROUP:	C&I	
AIPG DIVISION:	AIO	

MATERIAL SPEC	PROCESS SPEC
N/A	N/A

AMPHENOL CORPORATION
Amphenol Technology (Zhuhai) Co. Ltd.
No. 63 Xinghan Road, Sanzao Town, Jinwan, Zhuhai, PRC

8.0MM SURLOK-PLUS PLUG
1500V/DC
RIGHT-ANGLE TYPE

U

SIZE	CAGE CODE	DOCUMENT NUMBER	REV
C	90MJ5	10-765467-( )	D

SCALE: 2:1 | REF: 10-730188-( ) | SHEET 1 OF 1