Jun.1.2026 Copyright 2026 HIROSE ELECTRIC CO., LTD. All Rights Reserved.
In case of consideration for using Automotive equipment / device which demand high reliability, kindly contact our sales window correspondents.

Mated Figure

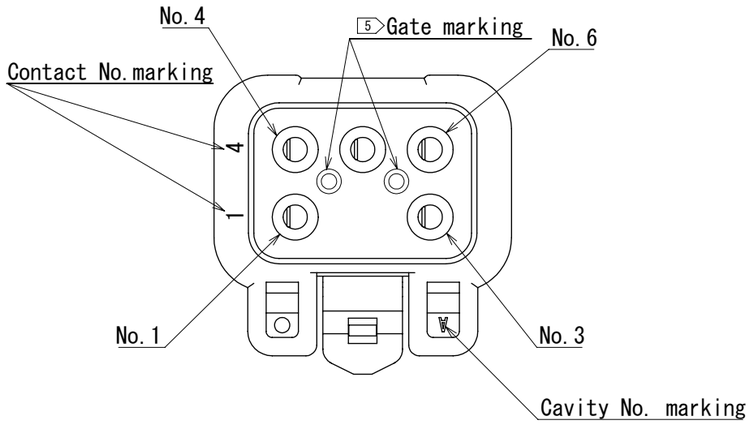

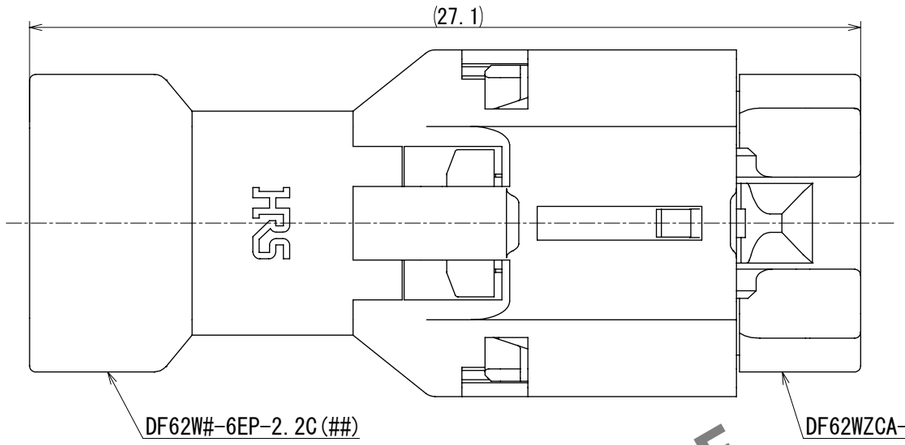

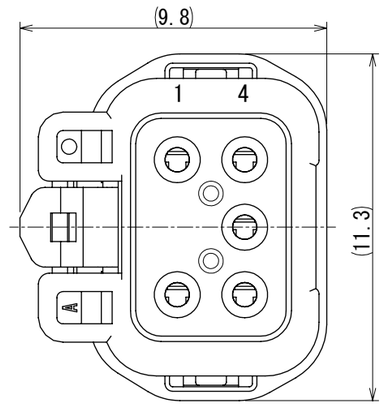

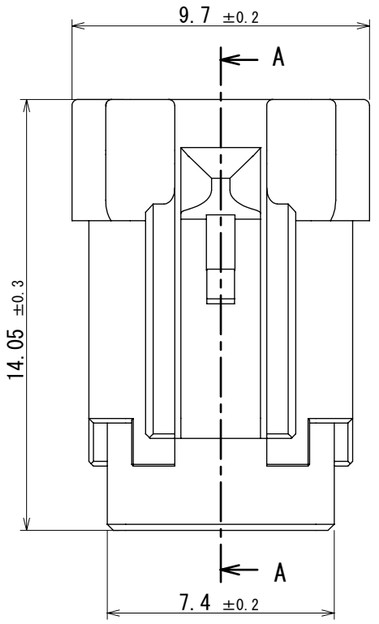

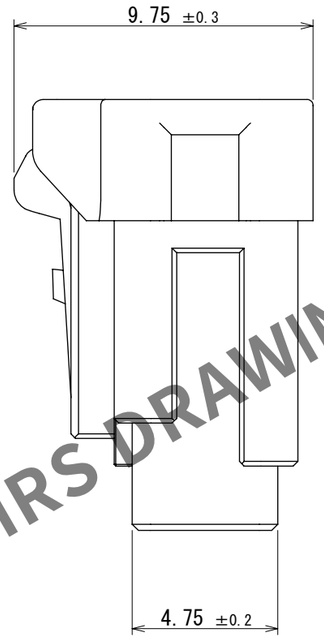

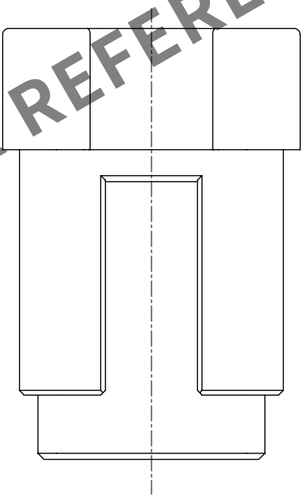

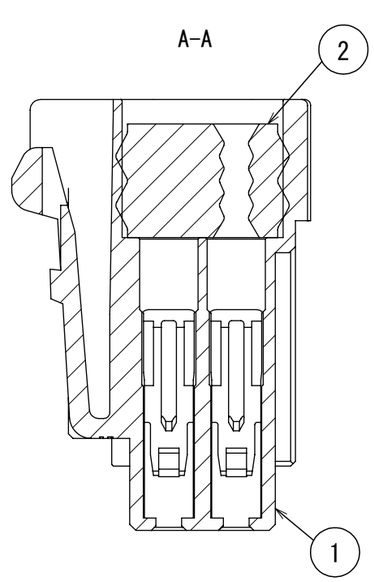

HRS DRAWING FOR REFERENCE

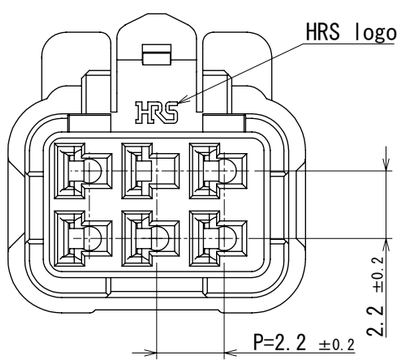

Notes.
1. 100 pcs. / bag
2. The dimensions in parenthesis are reference dimensions.
3. Always refer to the manuals below for operation of this product.
   For cable assembly /Cable assembly procedure ETAD-H0760
   For mating,unmating / Operation manual ETAD-H0761
   For operation / Board-to-wire Connector Guidelines ETAD-H1023
4. Applicable insulation diameter : ϕ0.98 to 1.2mm

5 Although the gate mark on the waterproof wire seal may be mounted upside down, there is no difference in performance.

NO.	MATERIAL	FINISH , REMARKS	NO.	MATERIAL	FINISH , REMARKS
1	PBT	UL94V-0(WHITE)	2	Silicone rubber	Gray

UNITS	SCALE		COUNT	DESCRIPTION OF REVISIONS	DESIGNED	CHECKED	DATE
mm	5:1	△0					

HIROSE ELECTRIC CO., LTD.

APPROVED : SJ. OKAMURA	2024. 09. 20	DRAWING NO. EDC-407687-00-00
CHECKED : HT. SATO	2024. 09. 20	PART NO. DF62WZCA-6S-2.2C
DESIGNED : YT. NIITSUMA	2024. 09. 20	
DRAWN : YT. NIITSUMA	2024. 09. 20	CODE NO. CL0544-1123-0-00 △0 1/1