RoHS Compliant

REV	SIGN	DATE	DESCRIPTION	APPROVER
A0		2025.11.27	Initial Release	Yours

THIS IS CAD DRAWING, DO NOT REVISE MANUALLY!!!

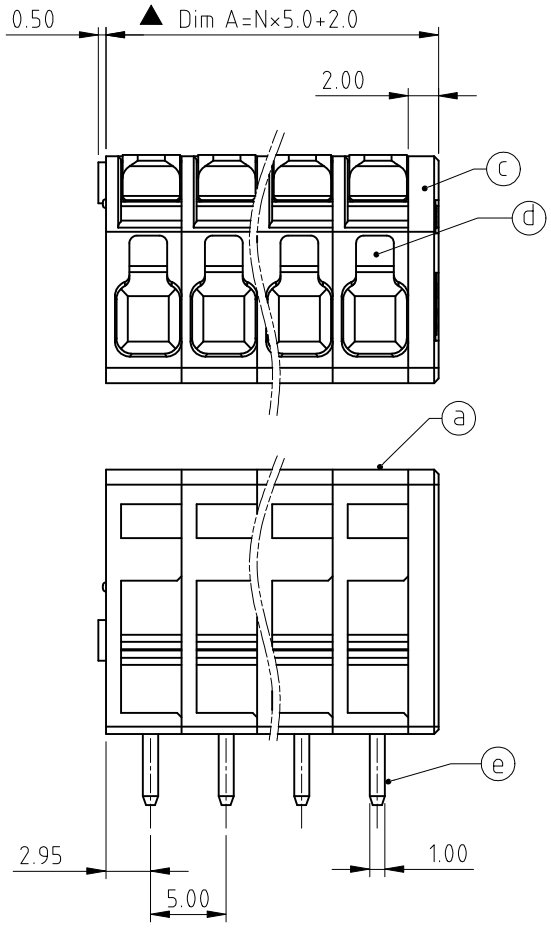

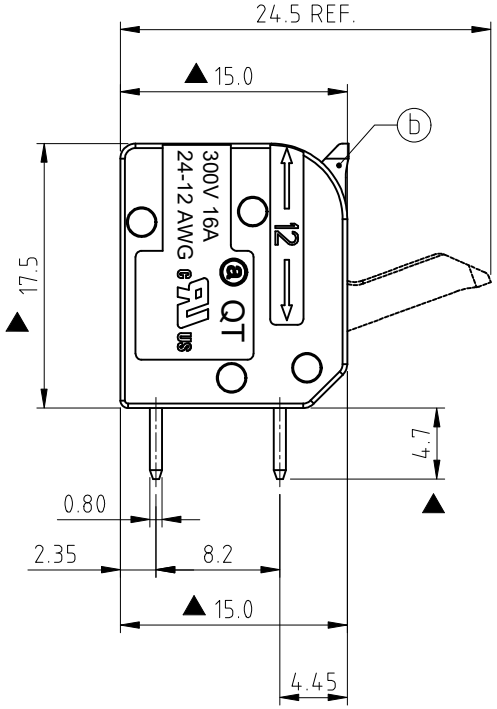

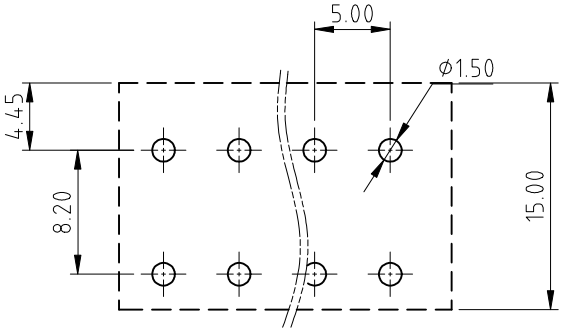

PCB layout
Top View

N = Number of poles

POLES	Tolerence
2p-6P	±0.2
7p-12P	±0.3
13p-18P	±0.4
19p-24P	±0.45

Material:
- Item ⓐ Terminal Body: PA66,
- Item ⓑ Terminal lever: PBT ,
- Item ⓒ Terminal Cover: PA66 ,
- Item ⓓ Spring: Stainless
- Item ⓔ Terminal Contact: Copper alloy,

Electrical:	UL1059 Group B.G	Group D	Group F
Voltage rating:	300 V	300V	250V
Current rating:	16A	10A	16A

- Wire range:
  Solid wire: 24-12AWG
  Stranded wire: 24-12AWG
- Wire strip length: 11-13 mm
- Withstanding Voltage: 1.6KV AC
- Insulation Resisance: DV500V 500MΩ min
- Operating temperature: -20°C to +105°C
- Assembling temperature: -5°C to +105°C
- Safety Approval: cULus

Part No. QT xx A DP x x V xxxx G

NO. OF POLES
02: 2 POLES
03: 3 POLES
... ...
24: 24 POLES

Body color
0 : Black 黑色
1 : Natural Color 本色
2 : Red 紅色
3 : Orange 橘色
4 : Yellow 黃色
5 : Green (RAL 6018/T) 綠色
6 : Blue 藍色
8 : Grey 灰色
9 : White 白色
C : Green (RAL 6018/U) 綠色

Lever color
0 : Black 黑色
1 : Natural Color 本色
2 : Red 紅色
3 : Orange 橘色
4 : Yellow 黃色
5 : Green (RAL 6018/T) 綠色
6 : Blue 藍色
8 : Grey 灰色
9 : White 白色
C : Green (RAL 6018/U) 綠色

RoHS compliant (lead<4%) In copper Alloy

00x0: "@" Logo (Standard)
00xA: "ANYTEK" Mark
Any special item by customer requst. please contact sales department.

Amphenol ANYTEK

CUSTOMER COPY

ALL RIGHTS RESERVED. REPRODUCTION OR ISSUE TO THIRD PARTIES IN ANY FORM WHATEVER IS NOT PERMITTED WITHOUT WRITTEN AUTHORITY FROM THE PROPRIETOR. PROPERTY OF ANYTEK TECHNOLOGY CO., LTD

TITLE	QT series 90D pitch 5.0mm PCB terminal block,				
PART NO.	QTxxADPxxVxxxxG			DWG NO.	8QT0004
APPROVED	CHECKED	DESIGNED	DRAWN	CUST NO.	Tolerance
		Yours 2025.11.27	Yours 2025.11.27	UNIT: mm SCALE: 2:1 SHEET: 01/01	REV.: A0

Tolerance	
X.	±0.50
X.X	±0.30
X.XX	±0.10
X°	±1°