PART NO.	ENGINEERING NO.	FINISHED LENGTH
1300060269	103000A01M1501	15M [49FT 3 IN]
1300060267	103000A01F8008	80FT [24.4M]

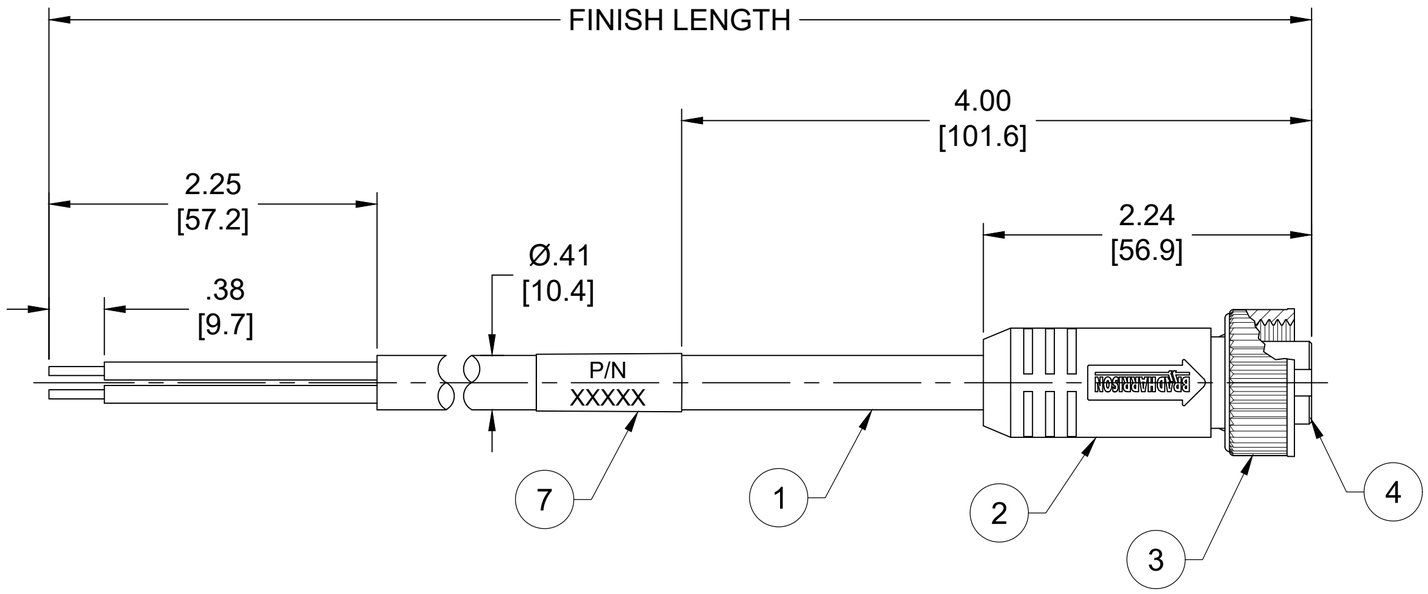

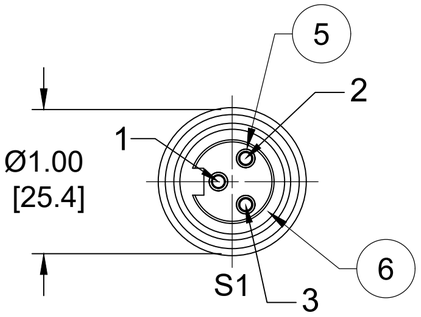

FEMALE FACE VIEW

NOTES:

1. MATERIAL: AS NOTED
2. FINISH: AS NOTED
3. ELECTRICAL:
   VOLTAGE : 500V PER IEC60664
   600V PER UL2238
   CURRENT: 13A
4. TEMP RATING: -20° TO +105°C
5. PROTECTION: IP67 (WHEN MATED)
6. COUPLING THREAD: 7/8"-16UN
7. UL RECOGNIZED FILE: E152210
   CSA CERTIFIED FILE: LR6837
8. ALL DIMENSIONS ARE FOR REFERENCE UNLESS TOLERANCED OR NOTED OTHERWISE

PART NUMBER LEGEND

103000A01F8008

FINISHED LENGTH:
F010= 1 FEET
F100= 10 FEET

M005= 0.5 METER
M010= 1 METER
M100= 10 METER

COUPLING NUT OPTIONS:
MATERIAL / FINISH:
BLANK = ZINC DIE CAST / BLACK E-COAT
1 = 303 ST. STEEL / PASSIVATED
8 = 313 ST. STEEL / PASSIVATED

	S1
GREEN/YELLOW-GND	1
BLACK	2
WHITE	3

WIRING DIAGRAM

CABLE LENGTH TOLERANCES
<.3M [1FT]: +19mm-0 [+.75in-0]
.3 - .9M [1 - 3FT]: +44.5mm-0 [+1.75in-0]
.9 - 1.8M [3 - 6FT]: +55.6mm-0 [+2.19in-0]
1.8 - 3.7M [6 - 12FT: +88.9mm-0 [+3.50in-0]
3.7 - 7.3M [12 - 24FT]: +165.1mm-0 [+6.50in-0]
7.3-14.6M [24 - 48FT]: +317.5mm-0 [+12.50in-0]
14.6 - 30.5M [48-100FT]: +622.3mm-0 [+24.50in-0]
OVER 30M [100FT] +2% OF FINISHED LENGTH

ITEM	COMPONENT	MATERIAL	FINISH
7	WRAP LABEL	VINYL	YELLOW
6	FRICTION RING	NYLON	WHITE
5	CONTACT SOCKET	COPPER ALLOY	GOLD PLATED
4	INSERT	TPE	YELLOW
3	COUPLING NUT	SEE P/N LEGEND	SEE P/N LEGEND
2	OVERMOLD	TPE	YELLOW
1	CABLE, 16 AWG, STOOW/ST	PVC	YELLOW

THIS DRAWING CONTAINS INFORMATION THAT IS PROPRIETARY TO MOLEX ELECTRONIC TECHNOLOGIES, LLC AND SHOULD NOT BE USED WITHOUT WRITTEN PERMISSION

DIMENSION UNITS	SCALE
INCH/MM	NTS

GENERAL TOLERANCES (UNLESS SPECIFIED)

	mm	INCH
4 PLACES	±----	±----
3 PLACES	±----	±----
2 PLACES	±----	±----
1 PLACE	±----	±----
0 PLACES	±----	±----
ANGULAR TOL ± ---- °		

DRAFT WHERE APPLICABLE MUST REMAIN WITHIN DIMENSIONS

CURRENT REV DESC: REMOVED OBSOLETED PART NUMBERS AS PER PCN#516685

EC NO:	830097	
DRWN:	SANATK1	2025/07/29
CHK'D:	GGA	2025/08/06
APPR:	GGA	2025/08/06
INITIAL REVISION:		
DRWN:	TWOLDEGE	2009/07/10
APPR:	JFMURPHY	2009/08/10

molex

MINI-CHANGE CORDSET, A-SIZE
3-POLE, FEMALE, STRAIGHT, SINGLE KEY,
#16 AWG

PRODUCT CUSTOMER DRAWING

DOCUMENT NUMBER	DOC TYPE	DOC PART	REVISION
SD-130006-008	PSD	001	C2

THIRD ANGLE PROJECTION	DRAWING	SERIES	MATERIAL NUMBER	CUSTOMER	SHEET NUMBER
	C-SIZE	130006	SEE P/N TABLE	GENERAL MARKET	1 OF 1

DOCUMENT STATUS	P1	RELEASE DATE	2025/08/06 10:03:40

FORMAT: IN-ACAD-tb-prod-C
REVISION: B
DATE: 2020/01/14