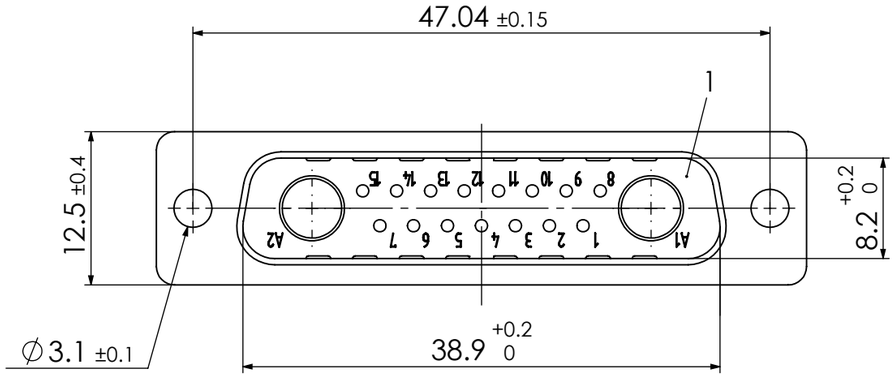

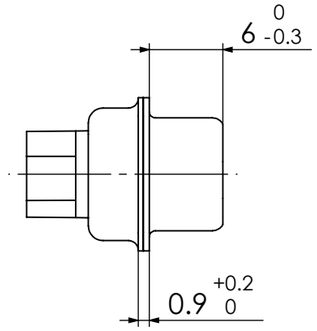

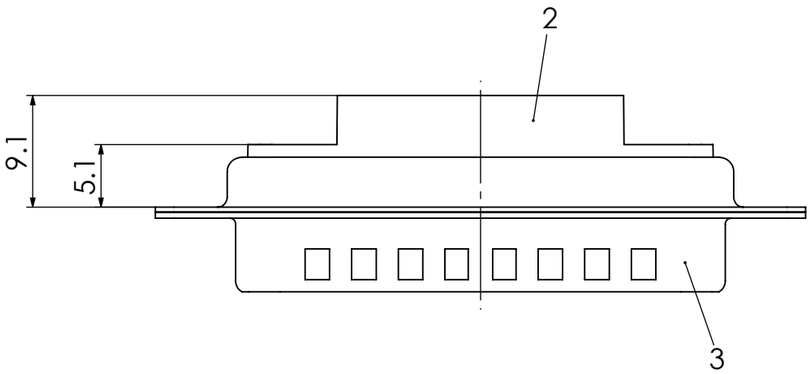

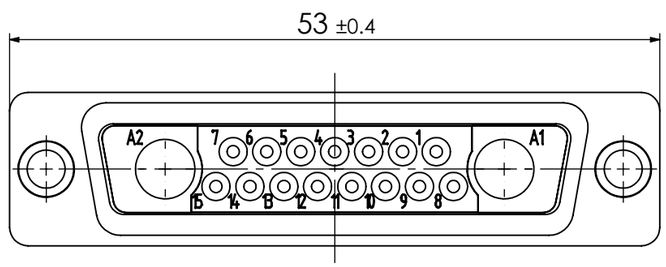

*) y for series FU or FL

Material Number	y *)
1731070247	U
1731070172	L

RoHS compliant
by exemption

Technical data for modifikation (FU)

Crimp contacts FK20P (AWG 20-24/1.3µm Au) included in delivery.

3	1	Shell	Steel	tin plated
2	1	Insulator rear part	PEI (-55°C to +130°C) acc. UL94V-0	green
1	1	Insulator front part	PBT acc. UL94V-0	green
No.	*St.*	*Part*	*Type Description/Material*	*Surface plating/Colour/Class*

RoHS compliant

Technical data for modifikation (FL)

Crimp contacts not supplied with connector. Contacts must be ordered separately.

3	1	Shell	Steel	tin plated
2	1	Insulator rear part	PA (-55°C to +115°C) acc. UL94V-0	black
1	1	Insulator front part	PBT acc. UL94V-0	black
No.	*St.*	*Part*	*Type Description/Material*	*Surface plating/Colour/Class*

COMMENT:
ALL RIGHTS ARE RESERVED BY US FOR THIS DRAWING. WITHOUT OUR PRIOR CONSENT, IT MAY NEITHER BE DUBLICATED NOR MADE AVAILABLE TO A THIRD PARTY, AND IT ALSO MAY NOT BE IMPROPERLY USED BY TE RECEIVER, OR A THIRD PARTY.

FUNCTIONAL SYMBOLS
F = 0
C = 0
S = 0

THIS DRAWING CONTAINS INFORMATION THAT IS PROPRIETARY TO MOLEX ELECTRONIC TECHNOLOGIES, LLC AND SHOULD NOT BE USED WITHOUT WRITTEN PERMISSION

DIMENSION UNITS: mm
SCALE: 2:1
MEASUREMENTS WITHOUT TOLERANCE ACC. TO: ISO 2768-m

REV.	CH.-NO.
4	24130
3	23769
2	22026
1	21782

CURRENT REVISION
DRWN: DRAWN BY msteinbrueck 03-05-2023
APPR: APPR BY fvetter 04-05-2023

INITIAL REVISION
DRWN: DRAWN BY ADenzinger 27-07-2006
APPR: APPR BY sschref 28-07-2006

REPLACEMENT FOR:
FRIST ANGLE PROJECTION
DRAWING: A3-SIZE

molex

FCT D-Sub Crimp Connector

PRODUCT CUSTOMER DRAWING
MATERIAL NUMBER: see table
REVISION: 4
DOCUMENT NUMBER: Fy17W2P7-K120
CUSTOMER: GENERAL MARKET
SHEET NUMBER: 1 OF 1