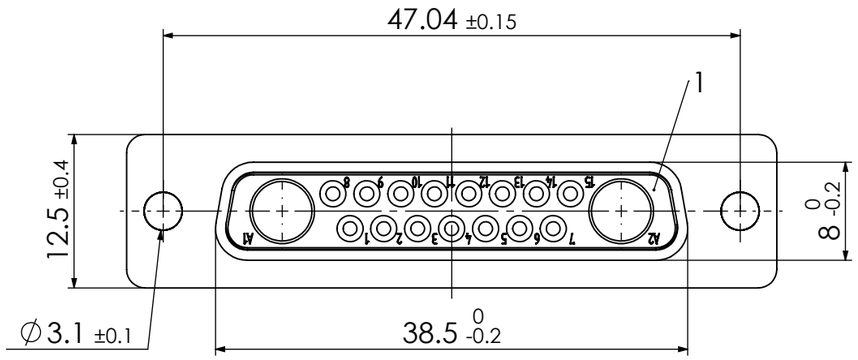

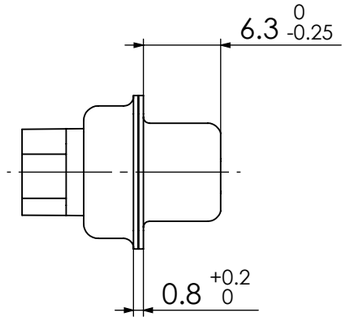

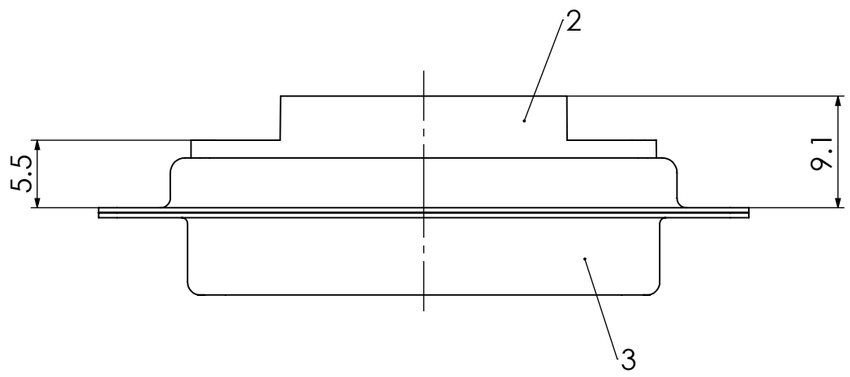

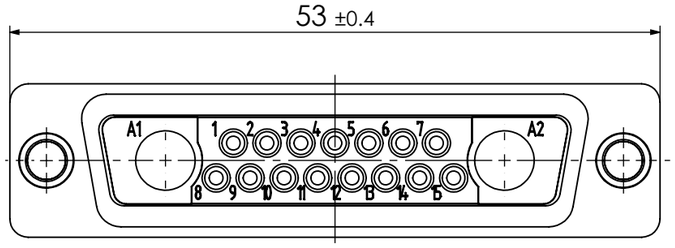

*) y for series FU or FL

Material Number	y *)
1731070585	U
1731070181	L

RoHS compliant
by exemption

Technical data for standard (FU)

Crimp contacts FK20S (AWG 20-24/1,3µm Au) included in delivery

3	1	Shell	Steel	tin plated
2	1	Insulator rear part	PEI (-55°C to +130°C) acc. UL94V-0	green
1	1	Insulator front part	PBT acc. UL94V-0	green
No.	*St.*	*Part*	*Type Description/Material*	*Surface plating/Colour/Class*

RoHS compliant

Technical data for standard (FL)

Crimp contacts not supplied with connector. Contacts must be ordered separately.

3	1	Shell	Steel	tin plated
2	1	Insulator rear part	PA (-55°C to +115°C) acc. UL94V-0	black
1	1	Insulator	PBT acc. UL94V-0	black
No.	*St.*	*Part*	*Type Description/Material*	*Surface plating/Colour/Class*

COMMENT:
ALL RIGHTS ARE RESERVED BY US FOR THIS DRAWING, WITHOUT OUR PRIOR CONSENT, IT MAY NEITHER BE DUBLICATED NOR MADE AVAILABLE TO A THIRD PARTY, AND IT ALSO MAY NOT BE IMPROPERLY USED BY TE RECEIVER, OR A THIRD PARTY.

FUNCTIONAL SYMBOLS
F1 = 0
F2 = 0
F3 = 0

THIS DRAWING CONTAINS INFORMATION THAT IS PROPRIETARY TO MOLEX ELECTRONIC TECHNOLOGIES, LLC AND SHOULD NOT BE USED WITHOUT WRITTEN PERMISSION

DIMENSION UNITS: mm | SCALE: 2:1
MEASUREMENTS WITHOUT TOLERANCE ACC. TO: ISO 2768-m

REV.	CH.-NO.
3	24130
2	23769
1	

CURRENT REVISION
DRWN: DRAWN BY msteinbrueck 03-05-2023
APPR: APPR BY fvetter 04-05-2023

INITIAL REVISION
DRWN: DRAWN BY MJobst 11-01-2008
APPR: APPR BY ADenzinger 14-01-2008

REPLACEMENT FOR:
FRIST ANGLE PROJECTION
DRAWING: A3-SIZE

molex

FCT D-Sub Crimp Connector

PRODUCT CUSTOMER DRAWING

MATERIAL NUMBER: see table
REVISION: 3
DOCUMENT NUMBER: Fy17W2S7-K121
CUSTOMER: GENERAL MARKET
SHEET NUMBER: 1 OF 1