LOOSE PIECE		SPECIFICATIONS	
MATERIAL NUMBER	ENGINEERING NUMBER	STUD SIZE	"S" ±.005 [0.13]
190670103	H-981-14	1/4	.265 [6.73]
190670104	H-981-56	5/16	.328 [8.33]
190670359	H-981-38	3/8	.390 [9.91]

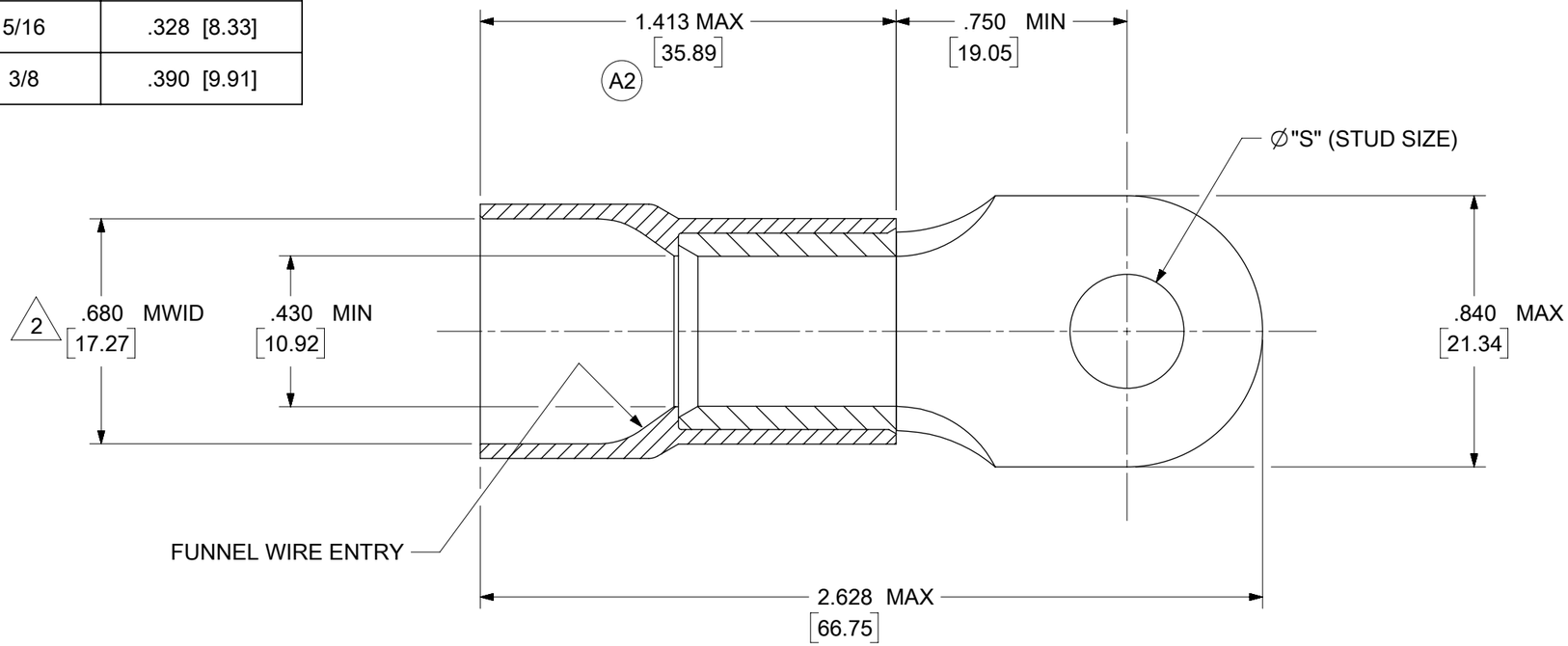

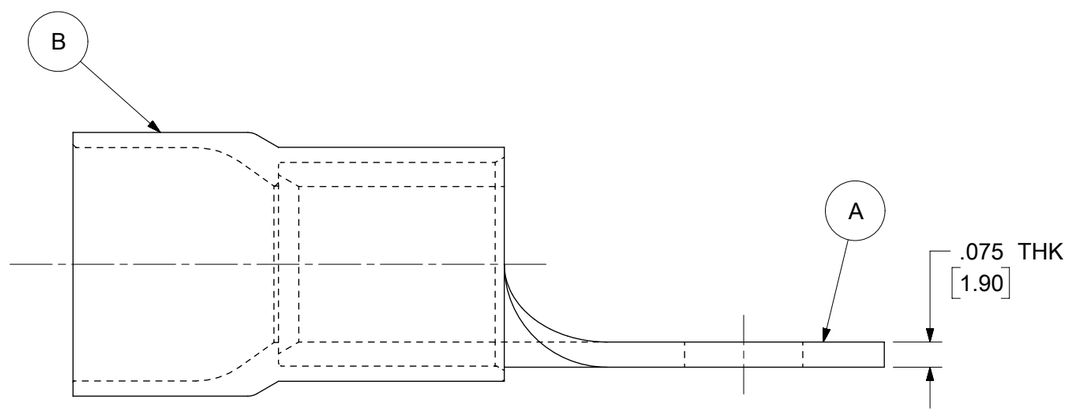

NOTES:

1. MATERIAL:
   (A). TERMINAL: COPPER ALLOY
   PLATING: ELECTRO-TIN (.0003 MIN.)
   (B). INSULATION: NYLON 6/6, COLOR CODED BLUE
2. MWID: MAXIMUM WIRE INSULATION DIAMETER
3. WIRE SIZE: 1/0 AWG
   55 MM^2
4. ALL COMPONENTS ARE RoHS COMPLIANT.
5. DIMS. SHOWN ARE FOR REFERENCE ONLY.

THIS DRAWING CONTAINS INFORMATION THAT IS PROPRIETARY TO MOLEX ELECTRONIC TECHNOLOGIES, LLC AND SHOULD NOT BE USED WITHOUT WRITTEN PERMISSION

FUNCTIONAL SYMBOLS: E/A = 0; E/C = 0; E/P = 0

DIVISIONAL SYMBOLS

DIMENSION UNITS: INCH/MM
SCALE: NTS

GENERAL TOLERANCES (UNLESS SPECIFIED)

	MM	INCH
4 PLACES	± ---	± ---
3 PLACES	± ---	± ---
2 PLACES	± ---	± ---
1 PLACE	± ---	± ---
0 PLACES	± ---	± ---
ANGULAR TOL	± ---	

DRAFT WHERE APPLICABLE MUST REMAIN WITHIN DIMENSIONS

CURRENT REV DESC: INSUL OAL DIM UPDATE: 1.408 WAS 1.398

EC NO: 712551
DRWN: DMYRICK 2022/06/29
CHK'D: JMACNEIL 2022/06/29
APPR: JMACNEIL 2022/06/29

INITIAL REVISION:
DRWN: PBUNNELL 2001/03/01
APPR: RDEROSS 2001/03/07

THIRD ANGLE PROJECTION | DRAWING: B-SIZE | SERIES: 19067

molex

NYLAKRIMP FUNNEL ENTRY
RING TONGUE TERMINAL 1/0 AWG

PRODUCT CUSTOMER DRAWING

DOCUMENT NUMBER	DOC TYPE	DOC PART	REVISION
SD-19067-007	PSD	001	A2

MATERIAL NUMBER	CUSTOMER	SHEET NUMBER
SEE CHART	GENERAL MARKET	1 OF 1

DOCUMENT STATUS	P1	RELEASE DATE	2022/06/29 23:36:18

FORMAT: Eng-lega-portrait-prod-B
REVISION: E
DATE: 2020/01/14