UNPLATED MATERIAL NUMBER	UNPLATED ENG. NUMBER	UNPLATED MAT. NO. ON TAPE	UNPLATED ENG. NO. ON TAPE	PLATED MATERIAL NUMBER	PLATED ENGINEERING NUMBER	PLATED MAT. NO. ON TAPE	PLATED ENG. NO ON TAPE	SEE DETAIL	STUD SIZE	WIRE RANGE	"S" ±.015/0.38	"L" ±.050/1.27	"W" ±.050/1.27	"C" ±.050/1.27	"B" ±.020/0.51	"T" ±.020/0.51
192210408	BCL-810	---	---	192210223	BCL-810-PL	190820011	BCL-810-PLT	A	10/4.8mm	8 AWG/10mm ^{2}	.214/5.45	1.187/30.15	.438/11.13	.376/9.55	.185/4.70	.070/1.78
192210409	BCL-814	190820014	BCL-814T	192210224	BCL-814-PL	190820013	BCL-814-PLT	A	1/4"/M6	8 AWG/10mm ^{2}	.278/7.06	1.187/30.15	.438/11.13	.376/9.55	.185/4.70	.070/1.78
192210562	BCL-814-WP	---	---	192210563	BCL-814-WP-PL	---	---	---	1/4"/M6	8 AWG/10mm ^{2}	.278/7.06	1.313/33.35	.594/15.09	.422/10.72	.185/4.70	.070/1.78
192210411	BCL-8516	---	---	192210225	BCL-8516-PL	190820016	BCL-8516-PLT	A	5/16"/M8	8 AWG/10mm ^{2}	.340/8.63	1.187/30.15	.438/11.13	.376/9.55	.185/4.70	.070/1.78
192210482	BCL-8516-WP	---	---	192210483	BCL-8516-WP-PL	190820034	BCL-8516-WP-PLT	B	5/16"/M8	8 AWG/10mm ^{2}	.340/8.63	1.313/33.35	.594/15.09	.422/10.72	.185/4.70	.070/1.78
192210410	BCL-838-WP	190820015	BCL-838-WPT	192210226	BCL-838-WP-PL	192210566	BCL-838-WP-PLT	B	3/8"/M9	8 AWG/10mm ^{2}	.400/10.16	1.313/33.35	.594/15.09	.422/10.72	.185/4.70	.070/1.78
192210481	BCL-838-XWP	---	---	192210484	BCL-838-XWP-PL	---	---	---	3/8"/M9	8 AWG/10mm ^{2}	.400/10.16	1.469/37.31	.766/19.46	.394/10.01	.185/4.70	.070/1.78
192210415	BCL-812-XWP	---	---	192210414	BCL-812-XWP-PL	---	---	---	1/2"/M12	8 AWG/10mm ^{2}	.520/13.21	1.469/37.31	.766/19.46	.394/10.01	.185/4.70	.070/1.78
192210425	BCL-610	---	---	192210424	BCL-610-PL	190820003	BCL-610-PLT	c	10/4.8mm	6 AWG/16mm ^{2}	.214/5.45	1.281/32.54	.438/11.13	.381/9.68	.232/5.89	.075/1.90
192210406	BCL-614-WP	---	---	192210227	BCL-614-WP-PL	190820005	BCL-614-PLT	B	1/4"/M6	6 AWG/16mm ^{2}	.278/7.06	1.406/35.72	.594/15.09	.427/10.85	.232/5.89	.080/2.03
192210494	BCL-614	---	---	192210495	BCL-614 -PL	192210498	BCL-6141-PLT	c	1/4"/M6	6 AWG/16mm ^{2}	.278/7.06	1.281/32.54	.438/11.13	.381/9.68	.232/5.89	.075/1.90
192210407	BCL-6516-WP	---	---	192210228	BCL-6516-WP-PL	190820009	BCL-6516-PLT	B	5/16"/M8	6 AWG/16mm ^{2}	.340/8.63	1.406/35.72	.594/15.09	.427/10.85	.232/5.89	.080/2.03
192210493	BCL-6516	190820010	BCL-6516T	192210492	BCL-6516-PL	---	---	c	5/16"/M8	6 AWG/16mm ^{2}	.340/8.63	1.281/32.54	.438/11.13	.381/9.68	.232/5.89	.075/1.90
192210384	BCL-638-WP	---	---	192210229	BCL-638-WP-PL	190820007	BCL-638-PLT	B	3/8"/M9	6 AWG/16mm ^{2}	.400/10.16	1.406/35.72	.594/15.09	.427/10.85	.232/5.89	.080/2.03
---	---	---	---			---	---	---	3/8"/M9	6 AWG/16mm ^{2}	.400/10.16	1.563/39.70	.766/19.46	.472/11.99	.232/5.89	.080/2.03
192210417	BCL-612-XWP	---	---	192210416	BCL-612-XWP-PL	---	---	---	1/2"/M12	6 AWG/16mm ^{2}	.520/13.21	1.563/39.70	.766/19.46	.472/11.99	.232/5.89	.080/2.03

M1

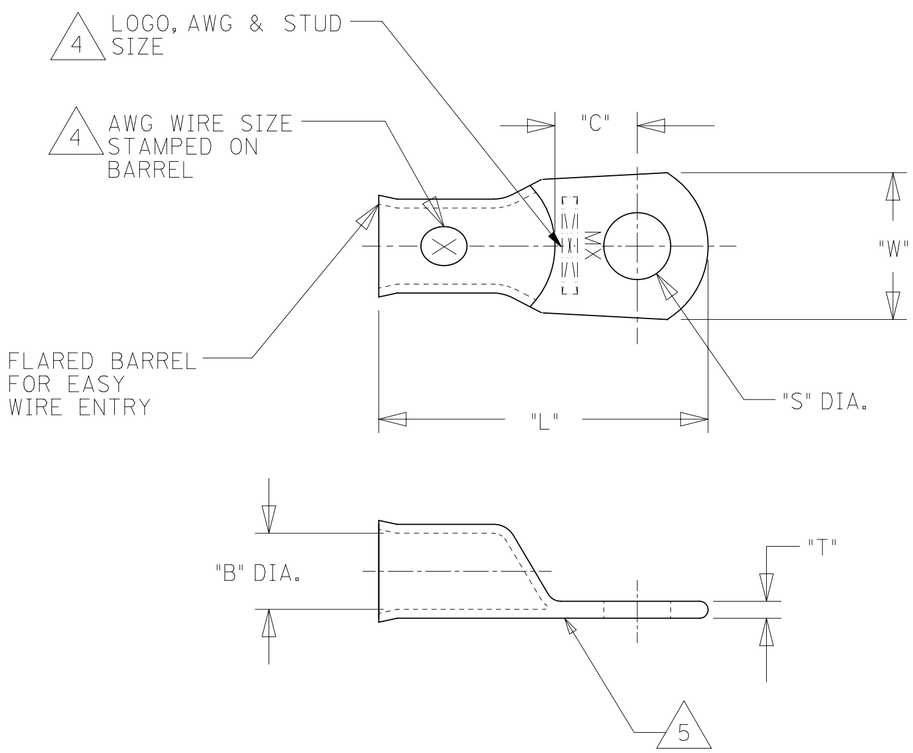

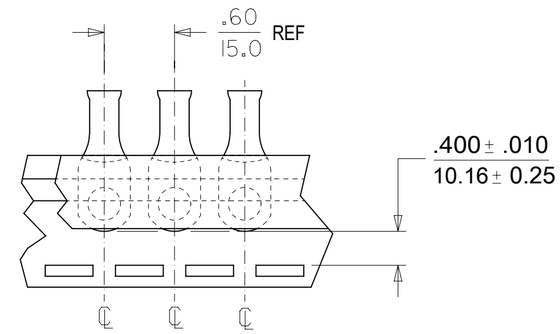

DETAIL C

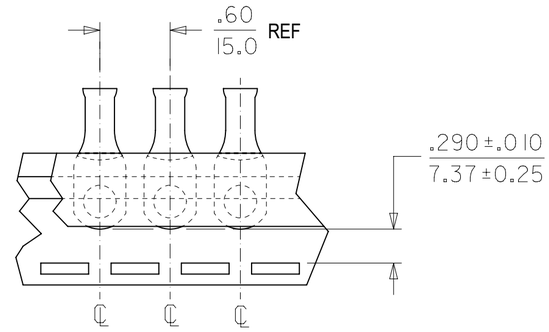

DETAIL A

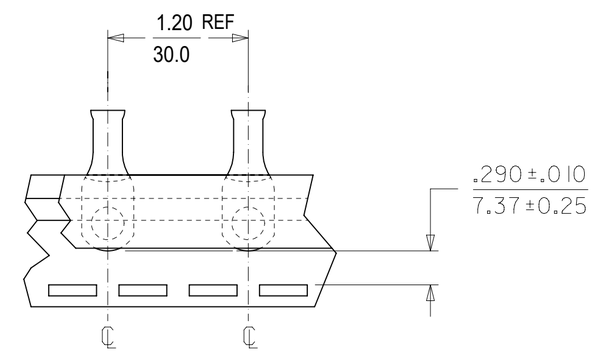

DETAIL B

NOTES:
1. FOR INSPECTION SIGHT HOLE, PLEASE CONSULT FACTORY.
2. OTHER STUD SIZES MAY BE AVAILABLE, PLEASE CONSULT FACTORY.
3. MATERIAL: COPPER
   PLATING: TIN
4. MARKINGS CAN BE AT EITHER LOCATION SHOWN.
5. IF TONGUE IS TO BE BENT AT ANY ANGLE, IT MUST BE BENT AROUND A RADIUS ONE HALF THE TONGUE THICKNESS.
6. ALL PARTS ARE RoHS COMPLIANT.

THIS DRAWING CONTAINS INFORMATION THAT IS PROPRIETARY TO MOLEX ELECTRONIC TECHNOLOGIES, LLC AND SHOULD NOT BE USED WITHOUT WRITTEN PERMISSION

DIMENSION UNITS	SCALE
INCH/MM	NTS

GENERAL TOLERANCES (UNLESS SPECIFIED)

	MM	INCH
4 PLACES	±	±
3 PLACES	±	±
2 PLACES	±	±
1 PLACE	±	±
0 PLACES	±	±
ANGULAR TOL	± °	

DRAFT WHERE APPLICABLE MUST REMAIN WITHIN DIMENSIONS

CURRENT REV DESC: ADDED PN 190820034

EC NO: 758223
DRWN: DEANNM1 2023/07/31
CHK'D: ETHRODAHL 2023/07/31
APPR: ETHRODAHL 2023/07/31

INITIAL REVISION:
DRWN: DMYRICK 2005/05/03
APPR: RDEROSS 2005/05/03

THIRD ANGLE PROJECTION | DRAWING: C-SIZE | SERIES: 19221

molex

EYELET STYLE
COPPER TERMINALS 8 AND 6 AWG LUGS

PRODUCT CUSTOMER DRAWING

DOCUMENT NUMBER	DOC TYPE	DOC PART	REVISION
SD-19221-001	PSD	001	M2

MATERIAL NUMBER	CUSTOMER	SHEET NUMBER
SEE TABLE	GENERAL MARKET	1 OF 1

DOCUMENT STATUS	P1	RELEASE DATE	2023/07/31 18:54:08

FORMAT: Eng-lega-master-tb-prod-C
REVISION: E
DATE: 2020/01/14