MATERIAL NUMBER	FCT Part Number	Shell Size / for No. of Contacts	A ±0.3	B ±0.1	C ±0.3	D ±0.3	E ±0.3	øF1 without Rubber bushing	øF2 with max I Rubber bushing		G ±0.3	H ±0.3	J ±0.3	K ±0.3	L ±0.3	M ±0.5	N ±0.3	Q	R ±0.3
1731110071	FMK1G-K774	1 / 9	14.9	25	31.6	39.5	15.2	3 - 9.5	6.5	FKT1-2	20.1	42	12.1	17	19.4	23.5	12	-	-
1731110072	FMK2G-K774	2 / 15	15.9	33.3	40	41	15.2	3 - 8.5	6.5	FKT1-2	23.3	43.5	12.1	25.8	27.9	19	16	84°	-
1731110073	FMK3G-K774	3 / 25	27.8	47	53.7	45	15.2	3 - 8.5	8	FKT1-2A	31.7	47.5	12.1	39	41.4	28	16	80°	12.9
1731110074	FMK4G-K774	4 / 37	44.3	63.5	70.2	48	18.2	3 - 12	9	FKT3-4	48.2	50.5	15.1	55.5	57.8	32.5	21	80°	16.1
1731110075	FMK5G-K774	5 / 50	41.9	61.1	67.8	48	18.2	3 - 12	9.7	FKT3-4A	45.8	50.5	15.1	53.1	55.5	32.5	21	80°	16.1

RoHS compliant
by exemption

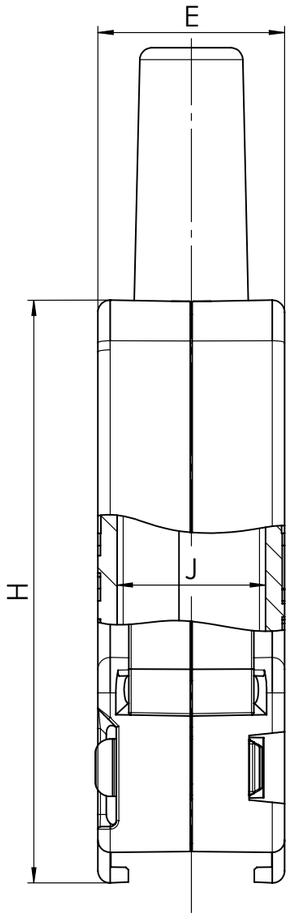

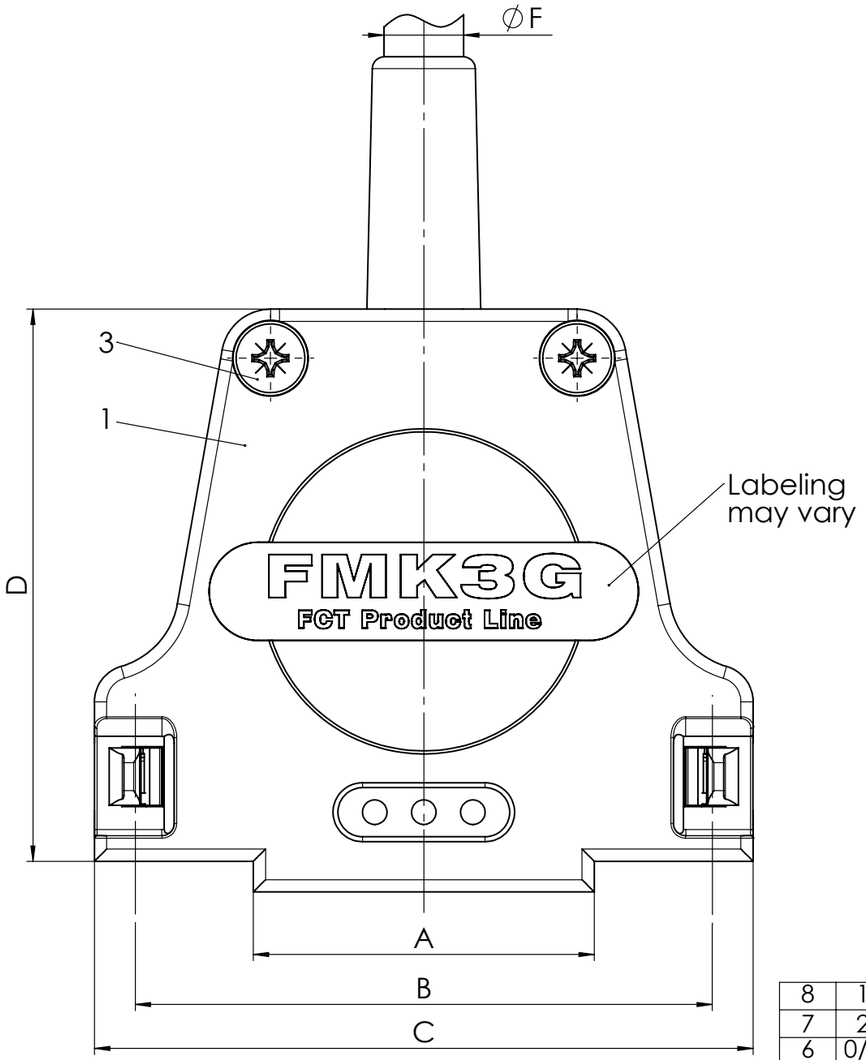

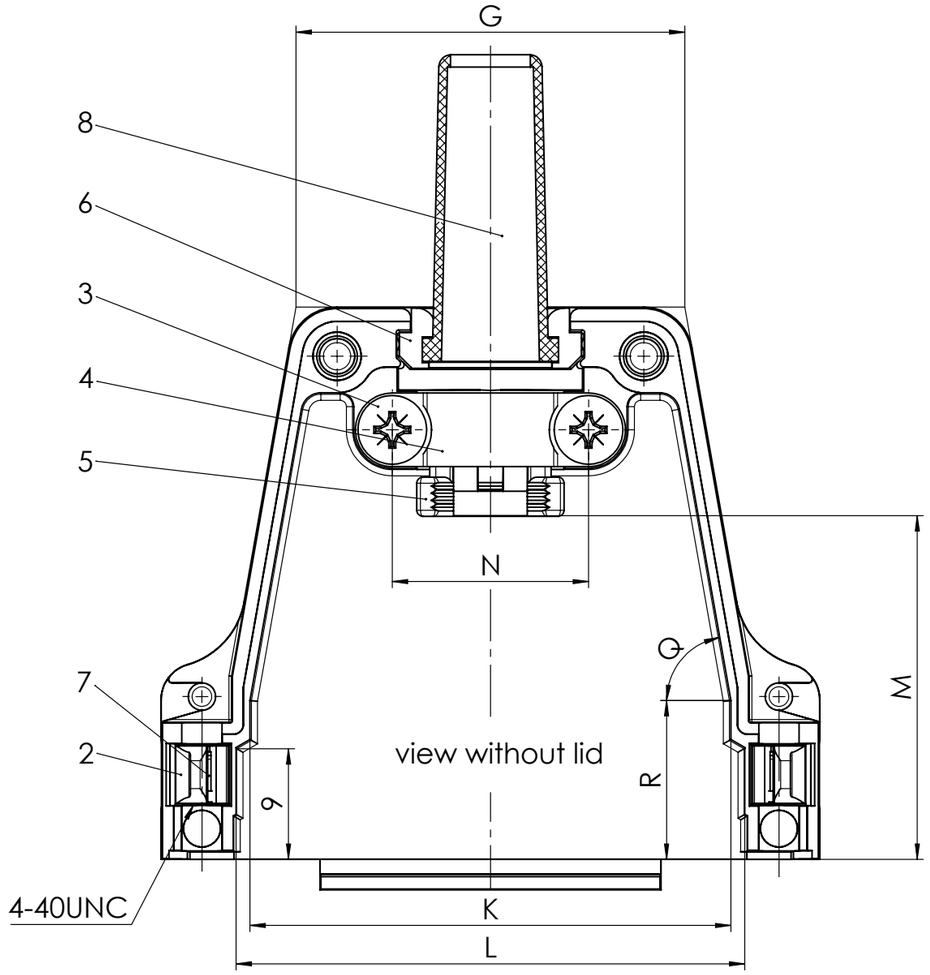

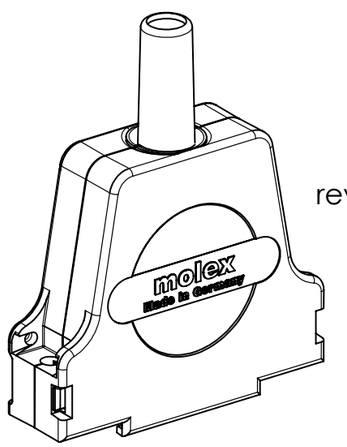

reverse side
1 : 1

max. torque are 40 Ncm
Part-No. 8 not mounted
FMK1G-K774 with Part-No. 5 alternatively
in Zinc die-cast, tin plated
FMK1G-K774 without Part-No. 6

No.	St.	Part	Type Description/Material	Surface plating/Colour/Class
8	1	Rubber bushing	TPE	black
7	2	Threaded insert	4-40 / Brass	blank
6	0/2	Cable reduction plate	Zinc die-cast	nickel plated
5	1	Strain relief	ABS / PC+ABS	nickel plated
4	1	Cable clamp	Steel	tin plated
3	4	Screw	Case hardened steel	zinc plated
2	2	Catch spring	ABS / PC+ABS	black
1	1	Hood	FMK1-5G / Zinc die-cast	nickel plated

FUNCTIONAL SYMBOLS
E = 0
E = 0
E = 0

THIS DRAWING CONTAINS INFORMATION THAT IS PROPRIETARY TO MOLEX ELECTRONIC TECHNOLOGIES, LLC AND SHOULD NOT BE USED WITHOUT WRITTEN PERMISSION

DIMENSION UNITS: mm
SCALE: 2:1
MEASUREMENTS WITHOUT TOLERANCE ACC. TO: ISO 2768-mK

molex

CURRENT REVISION
DRWN: DRAWN BY gkrimshandl 16-04-2026
APPR: APPR BY bwittek 29-04-2026

REV.	CH.-NO.
8	24635
7	24131

INITIAL REVISION
DRWN: DRAWN BY ADenzinger 30-11-2005
APPR: APPR BY okappla 01-12-2005

FCT Metal Hood

PRODUCT CUSTOMER DRAWING

MATERIAL NUMBER: see table
REVISION: 8

REPLACEMENT FOR:
FIRST ANGLE PROJECTION
DRAWING: A3-SIZE
DOCUMENT NUMBER: FMK1-5G-K774
CUSTOMER: GENERAL MARKET
SHEET NUMBER: 1 OF 1

COMMENT:
ALL RIGHTS ARE RESERVED BY US FOR THIS DRAWING, WITHOUT OUR PRIOR CONSENT,
IT MAY NEITHER BE DUBLICATED NOR MADE AVAILABLE TO A THIRD PARTY,
AND IT ALSO MAY NOT BE IMPROPERLY USED BY TE RECEIVER, OR A THIRD PARTY.