Material-No.	Order-No.	Shell Size / for No. of Contacts	A ±0.3	B ±0.1	C ±0.3	D ±0.3	E ±0.3	øF min - max	G ±0.3	H ±0.3	J ±0.3	K ±0.3	L ±0.3	M ±0.3	N ±0.5	P ±0.3
1731110165	FKC1GA-K994	1 / 9	10	25	31.8	39.3	16.7	4 - 11	20	41.6	13.2	17	19	20	22.8	14
1731110132	FKC1GA-K994E															
1731110526	FKC2GA-K994	2 / 15	16	33.3	41.2	45	16.2	4 - 11	28.4	47.8	11.6	24.8	26.9	27.9	26.3	18
1731110133	FKC2GA-K994E															
-	FKC3GA-K994	3 / 25	28	47	54.9	52	16.2	4 - 12	42.1	54.8	11.6	38.2	40.5	41.4	32.8	18
-	FKC3GA-K994E															
-	FKC4GA-K994	4 / 37	44.4	63.5	71.4	55	18.9	6 - 13	58.6	57.8	12.1	55	57.2	58.1	38.4	21
-	FKC4GA-K994E															

øF = Cable diameter

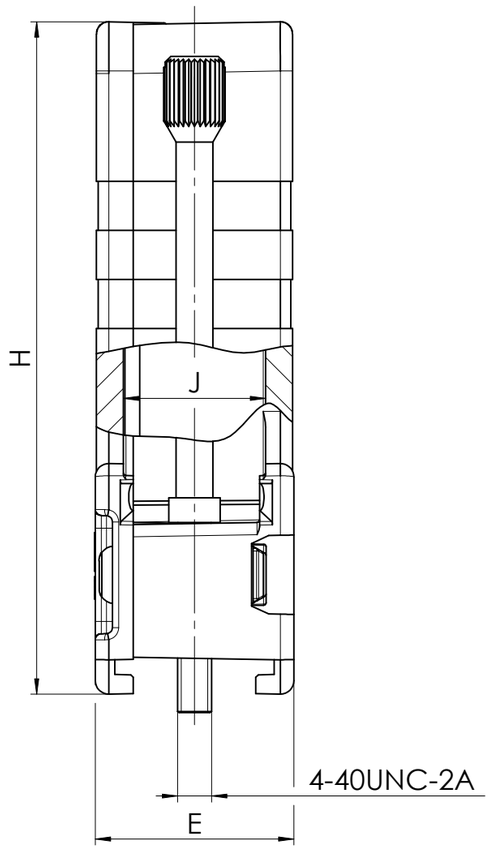

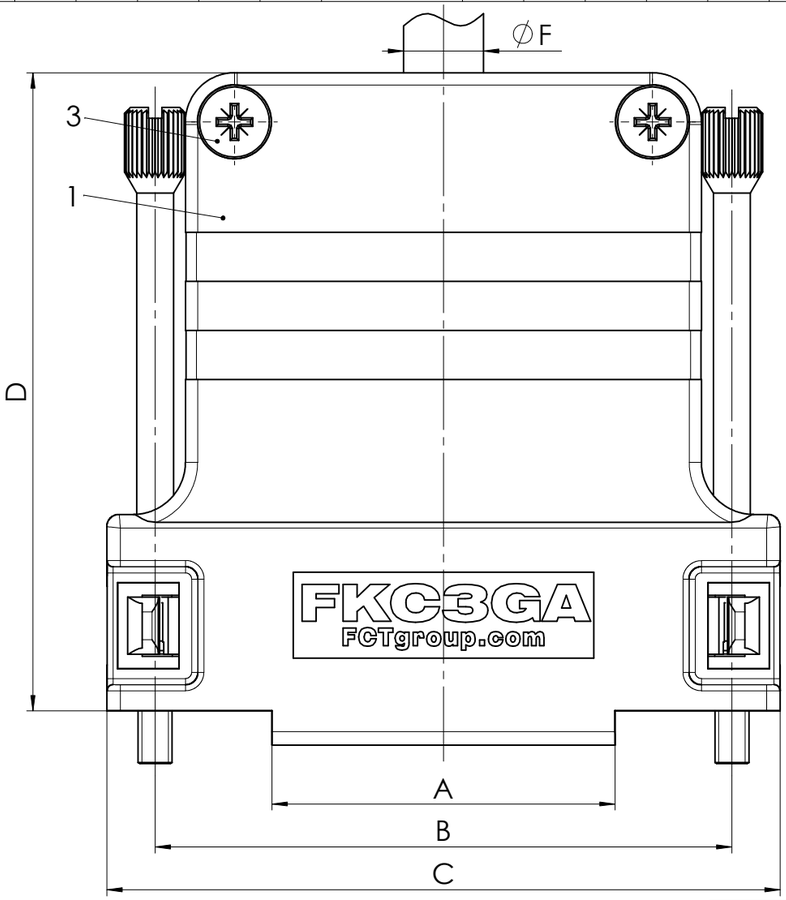

view of the hoods without lid

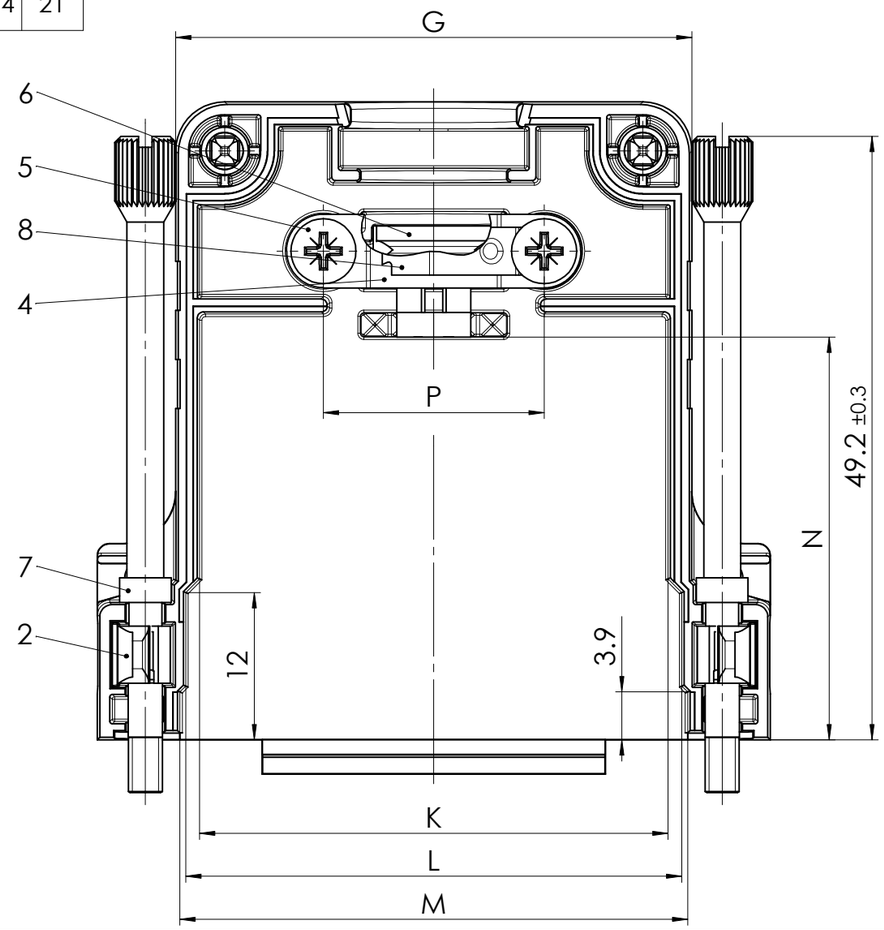

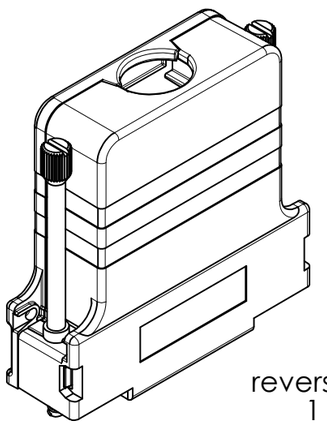

reverse side
1 : 1

RoHS compliant
by exemption

max. torque are 40 Ncm
Hood is snapped together
Part-No. 3, 4, 5, 6 and 8 not mounted

FKC1-4GA-K994 - Units per carton
FKC1-4GA-K994E - Individually packed

No.	St.	Part	Type Description/Material	Surface plating/Colour/Class
8	1	Contact spring	Spring steel	blank
7	2	Knurled thumb screw	FRS1/5-K190 4-40 / Brass	nickel plated
6	1	Strain relief	ABS	nickel plated
5	2	Cable clamp screw	Steel	zinc plated
4	1	Cable clamp	Steel	tin plated
3	2	Shell screw	Steel	zinc plated
2	2	Catch spring	PEI	black
1	1	Hood	FKC1-4GA / ABS / PC+ABS	nickel plated

SYMBOLS: F1 = 0, F2 = 0, F3 = 0, 5 = 0, ▼ = 0, C = 0, ☒ = 0, ■ = 0, ▽ = 0

THIS DRAWING CONTAINS INFORMATION THAT IS PROPRIETARY TO MOLEX ELECTRONIC TECHNOLOGIES, LLC AND SHOULD NOT BE USED WITHOUT WRITTEN PERMISSION

DIMENSION UNITS: mm | SCALE: 2:1 | MEASUREMENTS WITHOUT TOLERANCE ACC. TO: ISO 2768-m

REV.	CH.-NO.
5	24131
4	24041
3	23275
2	22470
1	22224

CURRENT REVISION
DRWN: DRAWN BY BWittek 15-01-2020
APPR: APPR BY HStanisch 16-01-2020

INITIAL REVISION
DRWN: DRAWN BY Meyer-RichterMUC 14-04-2008
APPR: APPR BY Gabriele.Wagner 03-07-2008

REPLACEMENT FOR: FKC1-4GA-K994C_AC.AD
THIRD ANGLE PROJECTION
DRAWING: A3-SIZE

molex

FCT-Plastic Hood

PRODUCT CUSTOMER DRAWING

MATERIAL NUMBER: see table | REVISION: 5

DOCUMENT NUMBER: FKC1-4GA-K994 | CUSTOMER: GENERAL MARKET | SHEET NUMBER: 1 OF 1

COMMENT:
ALL RIGHTS ARE RESERVED BY US FOR THIS DRAWING, WITHOUT OUR PRIOR CONSENT,
IT MAY NEITHER BE DUBLICATED NOR MADE AVAILABLE TO A THIRD PARTY,
AND IT ALSO MAY NOT BE IMPROPERLY USED BY TE RECEIVER, OR A THIRD PARTY.