ITEM	MOLEX P/N	DESCRIPTION	QTY	UOM
A	2239850001	3.4mm SideWize RA Receptacle, Black	1	PC
B	--	SOLDER BAR	AR	KG
PL	--	PART ID LABEL	1	PC

FROM	TO	WIRE SIZE	WIRE TYPE	COLOR
A	--	8AWG	UL1028	BLACK

TABLE 1

LABEL ID	LABEL CONTENT	REMARK
PL	MOLEX PN MOLEX BATCH WK/YR	LABEL TEXT MUST BE 2MM MAX IN HEIGHT WITH ARIAL FONT AND TO BE APPLIED IN A WRAP TYPE

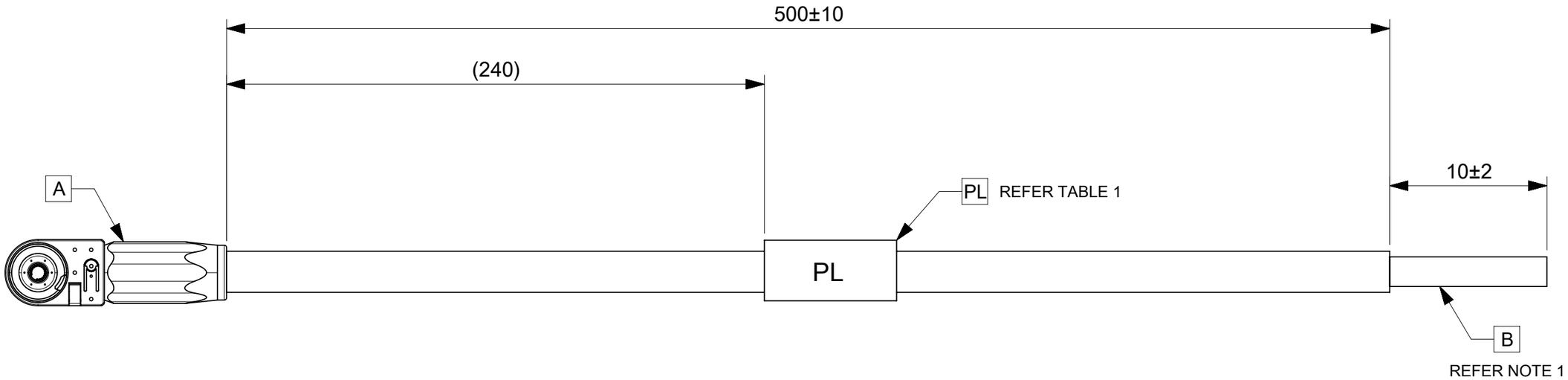

1. FREE ENDS MUST BE STRIPPED, TWISTED & TINNED. TINNING DIA IS 5.2MM MAX.

PRODUCT REQUIREMENT		
TEST NAME/COMPONENT NAME	TEST PARAMETER	REQUIREMENT
Continuity/Short/Open	AS PER PIN OUT TABLE	TO BE MET

REVISION	CHANGE NOTE	EC NO	DATE	CUSTOMER P/N	CUSTOMER REV
B	1. LABEL WRAPPING TYPE UPDATED 2. TINNING DIA UPDATED	ER	02-MAR-2026	NA	NA
A	INITIAL RELEASE	ER	21-JAN-2026	NA	NA

REVISION HISTORY

DETAIL	DESCRIPTION	DETAIL	DESCRIPTION
	Continues Taping		PVC sleeve or Silicon sleeve
	HST	13 +5.0 0.0	T Dimension
	Woven Braid		Convoluted Tube
	Spot Taping	CSR	Customer Specific requirements

FUNCTIONAL SYMBOLS: FA = 0, FC = 0, FP = 0

DIVISIONAL SYMBOLS

THIS DRAWING CONTAINS INFORMATION THAT IS PROPRIETARY TO MOLEX ELECTRONIC TECHNOLOGIES, LLC AND SHOULD NOT BE USED WITHOUT WRITTEN PERMISSION

DIMENSION UNITS: mm
SCALE: NTS
GENERAL TOLERANCES (UNLESS SPECIFIED)
ANGULAR TOL ± °
4 PLACES ±
3 PLACES ±
2 PLACES ±
1 PLACE ±
0 PLACES ±
DRAFT WHERE APPLICABLE MUST REMAIN WITHIN DIMENSIONS

CURRENT REV DESC:
EC NO: 849929
DRWN: SRAJAG 2026/03/02
CHK'D: RPAI01 2026/03/10
APPR: RPAI01 2026/03/10
INITIAL REVISION:
DRWN: SRAJAG 2026/01/21
APPR: RPAI01 2026/01/21

THIRD ANGLE PROJECTION | DRAWING: A3-SIZE | SERIES: 231953

molex

SIDEWIZE 3.40MM R-S 8AWG 500MM BK

PRODUCT CUSTOMER DRAWING

DOCUMENT NUMBER	DOC TYPE	DOC PART	REVISION
2319532015	PSD	000	B

MATERIAL NUMBER	CUSTOMER	SHEET NUMBER
2319532015	GENERAL MARKET	1 OF 1

DOCUMENT STATUS	P1	RELEASE DATE	2026/03/10 11:06:39

FORMAT: master_molex-A3
REVISION: J1
DATE: 2021/05/06