© – TE Connectivity. All Rights Reserved.

REVISIONS					
P	LTR	DESCRIPTION	DATE	DWN	APVD
	A1	ECN–26–402700; PLATING UPDATED	02SEP2026	TP	AV

NOTES:
1. REELS (1000 PCS./ REEL);
2. 8 REEL/BOX
3. SINGLE WEIGHT :0.55 g
4. WEIGHT PER BOX: 7.07 Kg

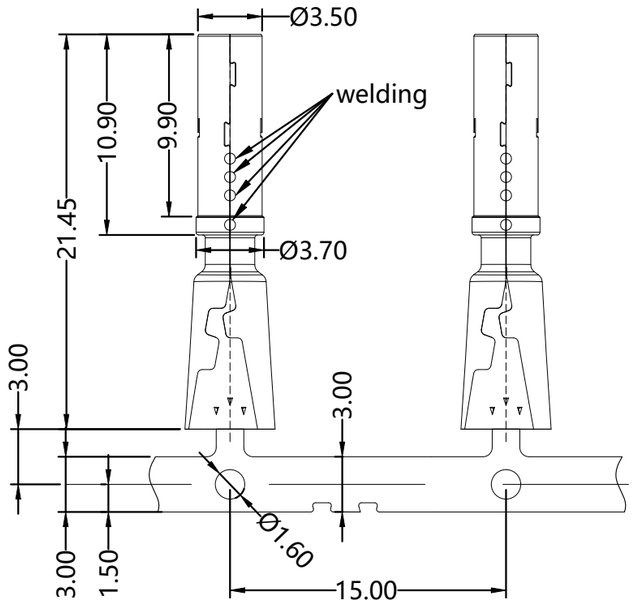



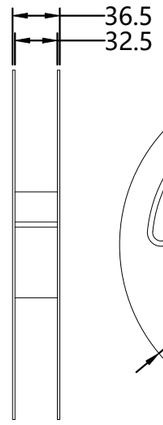

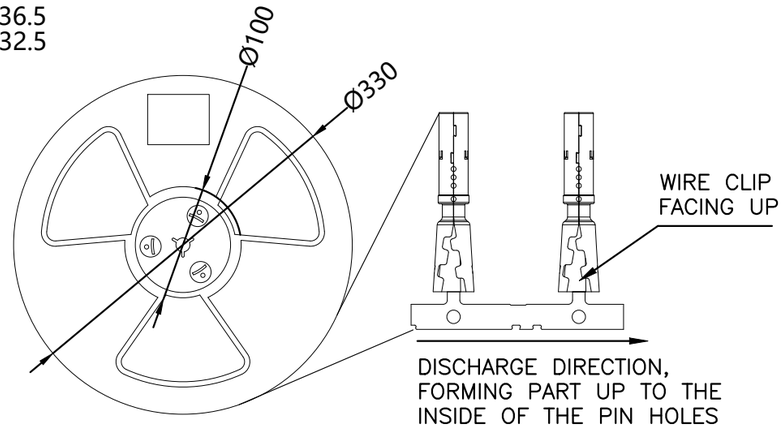

1000 PCS / REEL.

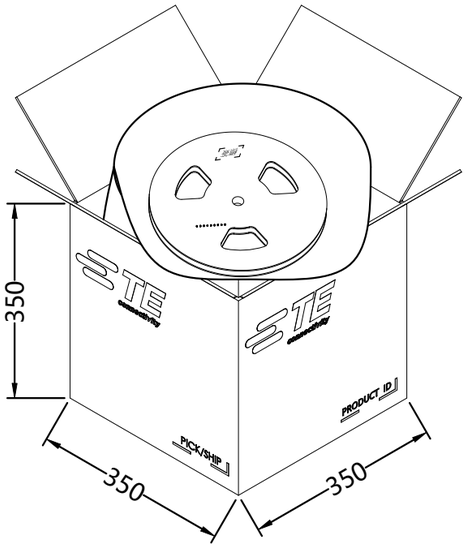

8 REEL/BOX.

NOTES:
FINISH (PLATING THICKNESS IN MICRO–INCHES)
1 100 MICROINCHES MIN MATTE TIN PLATED.
(10WT%P) MIN OVER NICKEL UNDERPLATED.
50 MICROINCHES MIN OVER COPPER UNDERPLATED

ITEM	DESCRIPTION	MATERIAL	FINISH/PLATING	QUANTITY PER ASSY
2	INSULATOR	POLYMER	N/A	1
1	OUTER CONTACT – BODY	PHOSPHOR BRONZE	NOTE 1	1

PARTS LIST

THIS DRAWING IS A CONTROLLED DOCUMENT.

DIMENSIONS: mm

TOLERANCES UNLESS OTHERWISE SPECIFIED:
0 PLC ± –
1 PLC ± 0.2
2 PLC ± 0.1
3 PLC ± 0.05
4 PLC ± –
ANGLES ± 10

MATERIAL: REFER NOTES

FINISH: –

DWN	SARGUNAM, YAZHINI	08APR2026
CHK	CHEE, TSHUPIN	08APR2026
APVD	ZI, WILL	08APR2026
PRODUCT SPEC	—	
APPLICATION SPEC	—	
WEIGHT	—	

TE Connectivity

NAME: CONTACT SUB–ASSY MINI–FAKRA PLUG RG174
–
–

SIZE	CAGE CODE	DRAWING NO	RESTRICTED TO
A3	00779	C–2554544	—

CUSTOMER DRAWING

SCALE	SHEET	REV
1:1	1 OF 1	A1