© – TE Connectivity. All Rights Reserved.

REVISIONS					
P	LTR	DESCRIPTION	DATE	DWN	APVD
	A1	ECN–26–402700; PLATING UPDATED	02SEP2026	TP	AV

NOTES:
1. REELS (4000 PCS./ REEL);
2. 6 REEL/BOX
3. SINGLE WEIGHT :0.05 g
4. WEIGHT PER BOX: 3.7 Kg

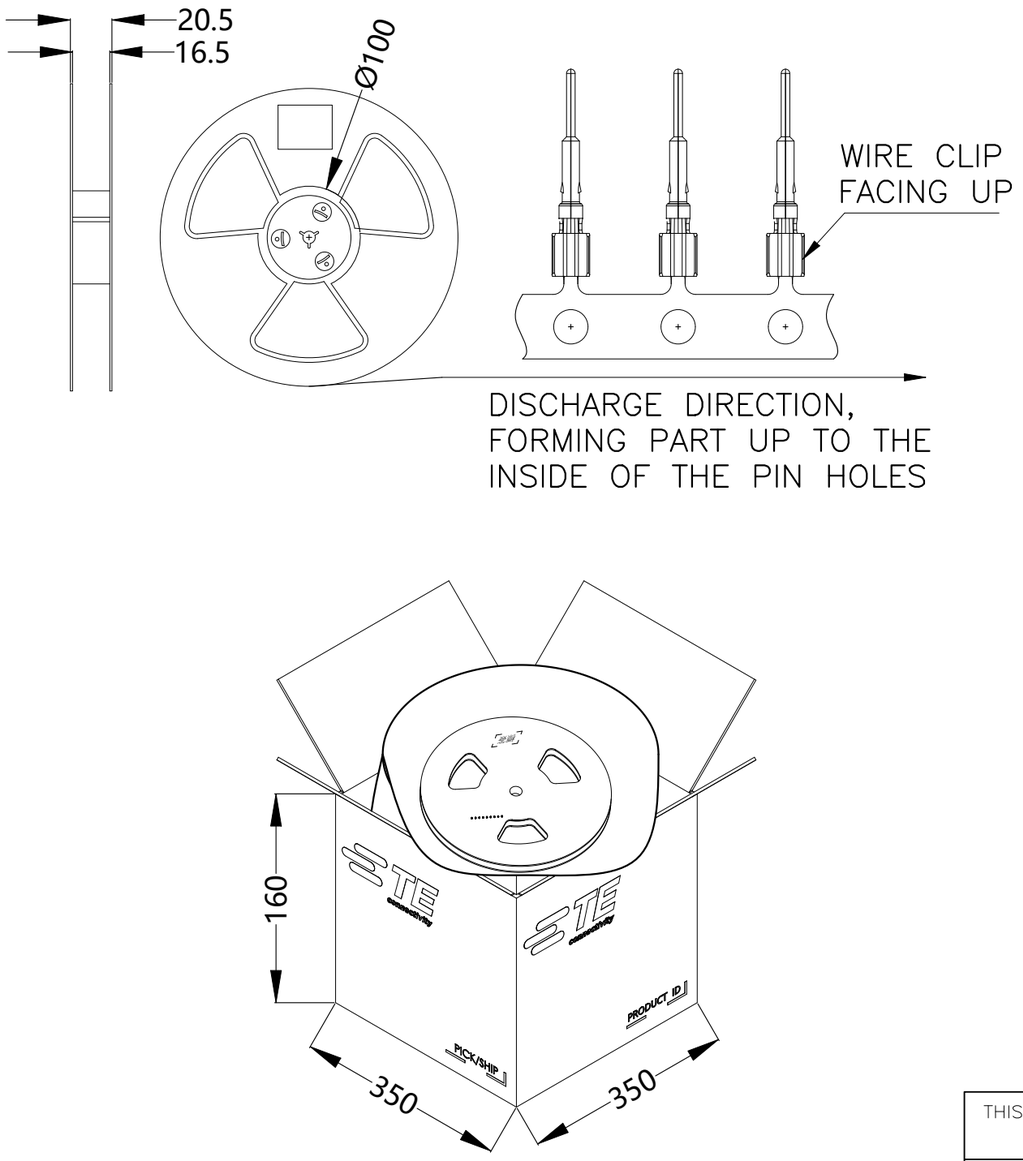

6 REEL/BOX.

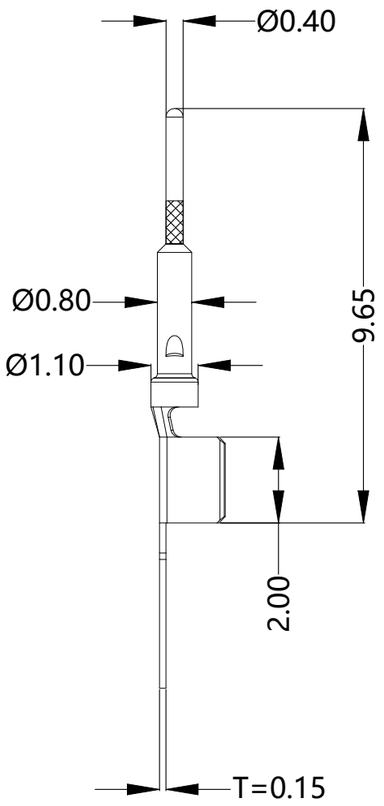

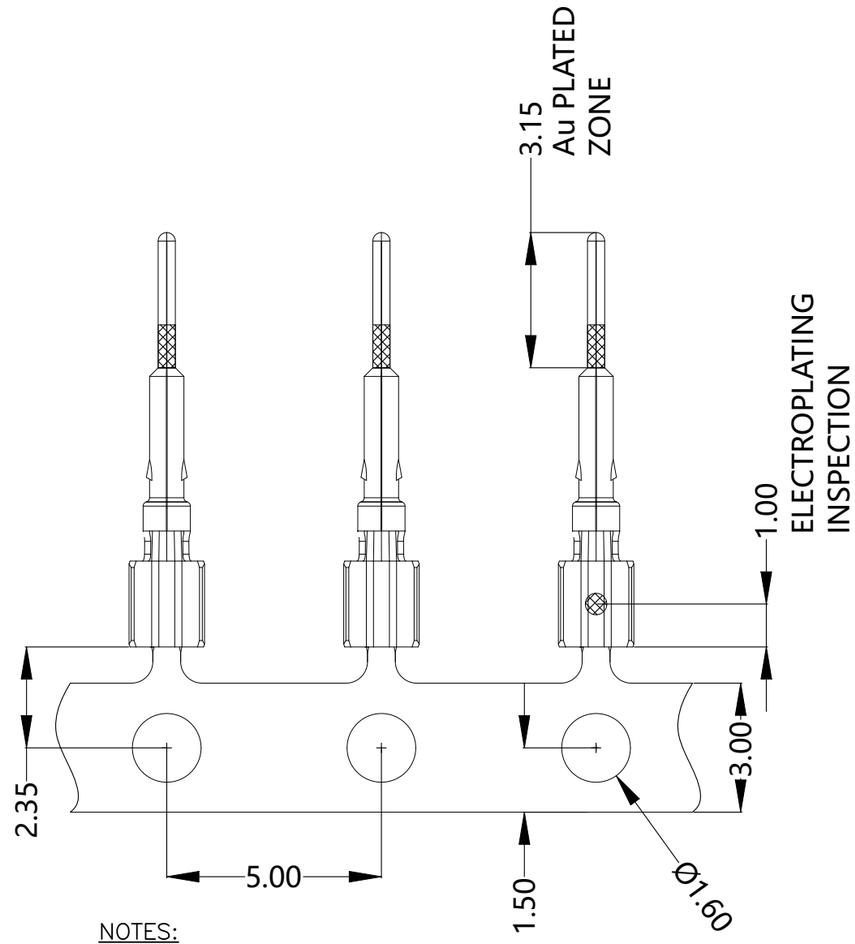

NOTES:
FINISH (PLATING THICKNESS IN MICRO–INCHES)
1 5 MICROINCHES MIN GOLD PLATED,
(10WT%P) MIN OVER NICKEL UNDERPLATED.
50 MICROINCHES MIN OVER COPPER UNDERPLATED

1	NOTE 1	C5191R–H; T=0.15±0.02	CONTACT PIN	1
2554546-1	FINISH/PLATING	MATERIAL	DESCRIPTION	ITEM
QUANTITY PER ASSY	PARTS LIST			

THIS DRAWING IS A CONTROLLED DOCUMENT.

DIMENSIONS: mm	TOLERANCES UNLESS OTHERWISE SPECIFIED:
	0 PLC ± –
	1 PLC ± 0.1
	2 PLC ± 0.05
	3 PLC ± 0.03
	4 PLC ± –
	ANGLES ± 3

MATERIAL	FINISH
REFER NOTES	–

DWN	08APR2026 SARGUNAM, YAZHINI
CHK	08APR2026 CHEE, TSHUPIN
APVD	08APR2026 ZI, WILL
PRODUCT SPEC	—
APPLICATION SPEC	—
WEIGHT	—

TE Connectivity

NAME
TERMINAL CRIMP MINI–FAKRA PLUG
–
–

SIZE	CAGE CODE	DRAWING NO	RESTRICTED TO
A3	00779	C–2554546	—

CUSTOMER DRAWING

SCALE	SHEET	REV
1:1	1 OF 1	A1