© – TE Connectivity. All Rights Reserved.

REVISIONS					
P	LTR	DESCRIPTION	DATE	DWN	APVD
	A	GTP, ECN-26-396582	31JUL2026	TP	AV

NOTES:
1. MATERIALS: PA66-RNG00
2. COLOR: BLACK
3. PACKAGING: 2000PCS/BAG (PE) BAG (PE)/BOX.
4. SINGLE WEIGHT: 0.27g
5. WEIGHT PER BOX; 2.96Kg

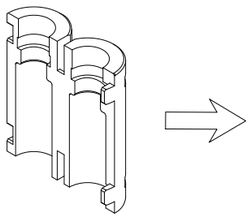

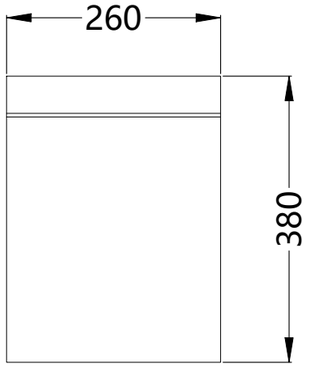

2000PCS/BAG(PE).

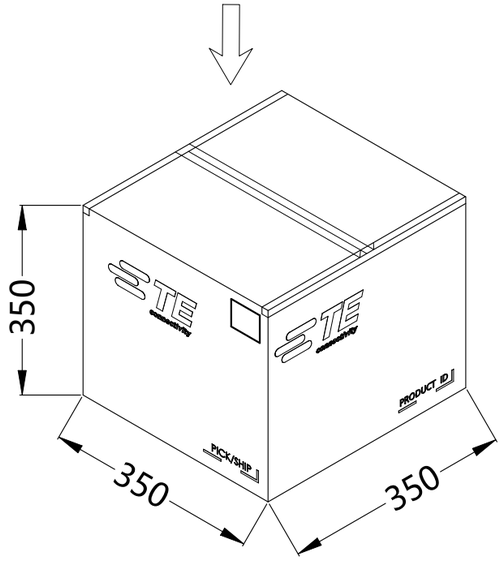

4BAG/BOX.

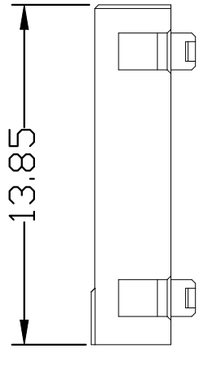

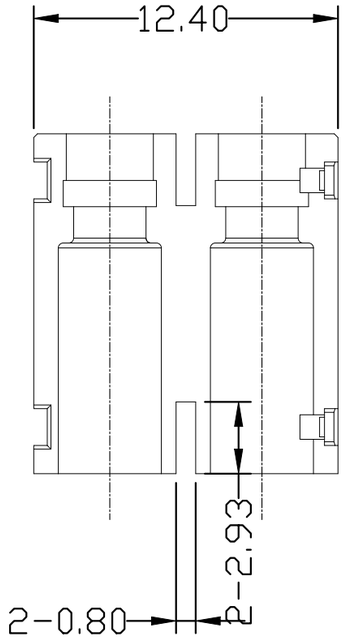

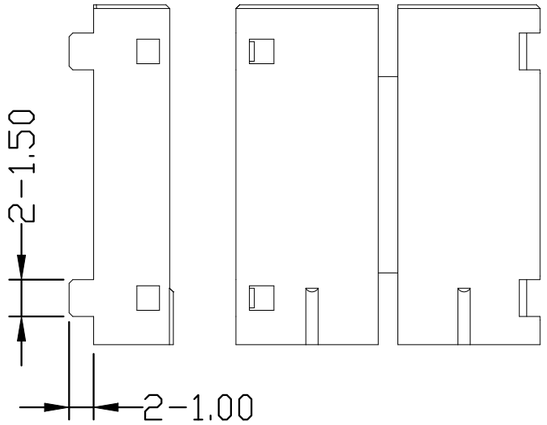

THIS DRAWING IS A CONTROLLED DOCUMENT.		DWN 08APR2026 SARGUNAM, YAZHINI	TE Connectivity
DIMENSIONS: mm	TOLERANCES UNLESS OTHERWISE SPECIFIED: 0 PLC ± – ; 1 PLC ± 0.3 ; 2 PLC ± 0.2 ; 3 PLC ± 0.1 ; 4 PLC ± – ; ANGLES ± 2	CHK 08APR2026 CHEE, TSHUPIN	NAME: COVER FOR CT SUB-ASSY MFK 1P PLUG – –
		APVD 08APR2026 ZI, WILL	
		PRODUCT SPEC —	
		APPLICATION SPEC —	SIZE A3 · CAGE CODE 00779 · DRAWING NO C-2554554 · RESTRICTED TO —
MATERIAL: REFER NOTES	FINISH: –	WEIGHT –	
CUSTOMER DRAWING			SCALE 1:1 · SHEET 1 OF 1 · REV A