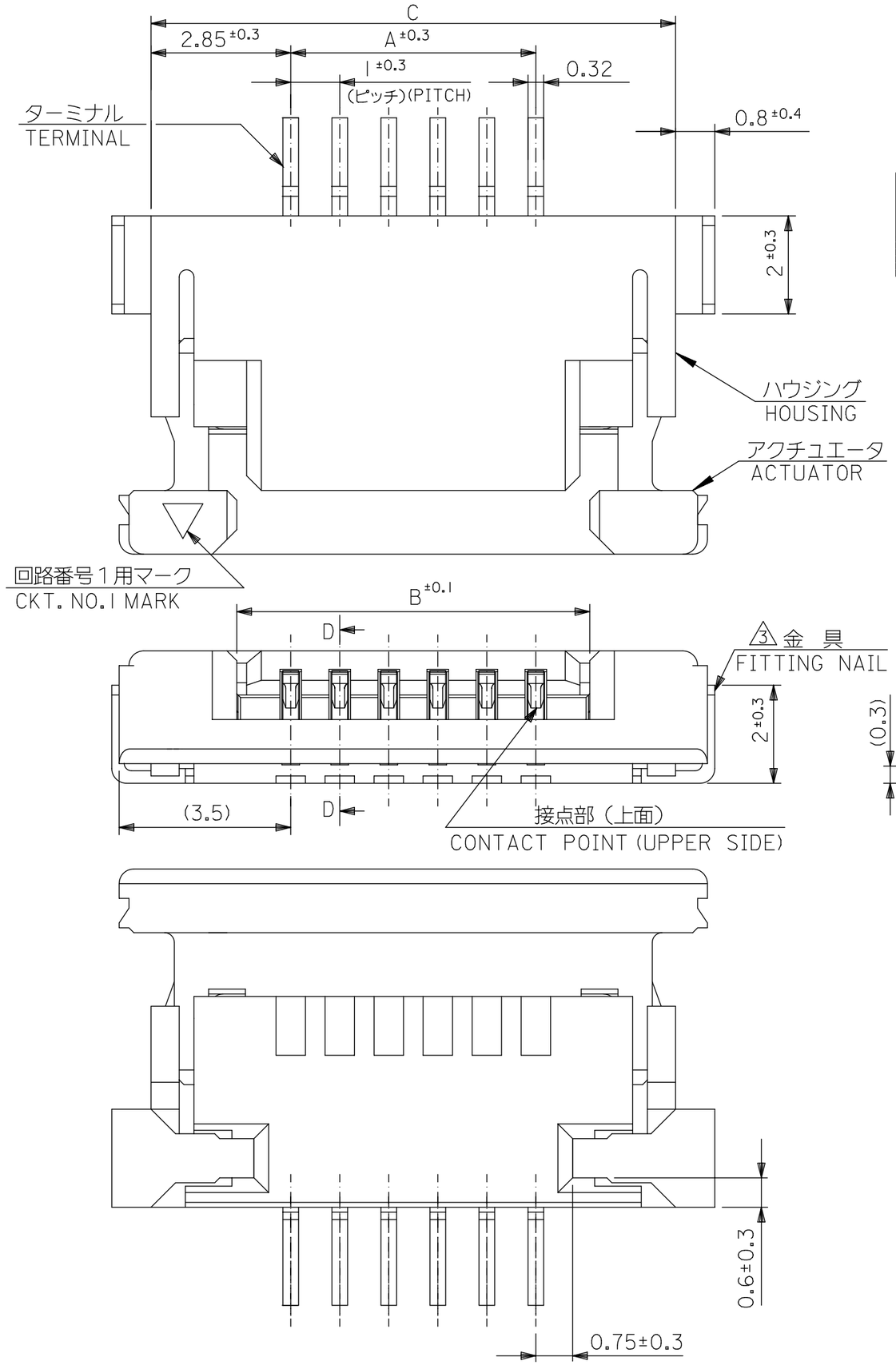

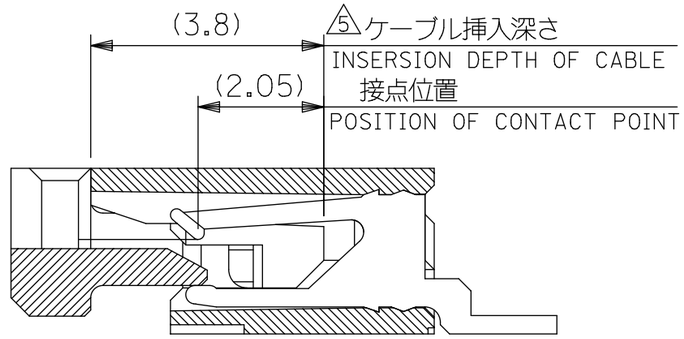

断面Ｄ－Ｄ
SECT.D-D

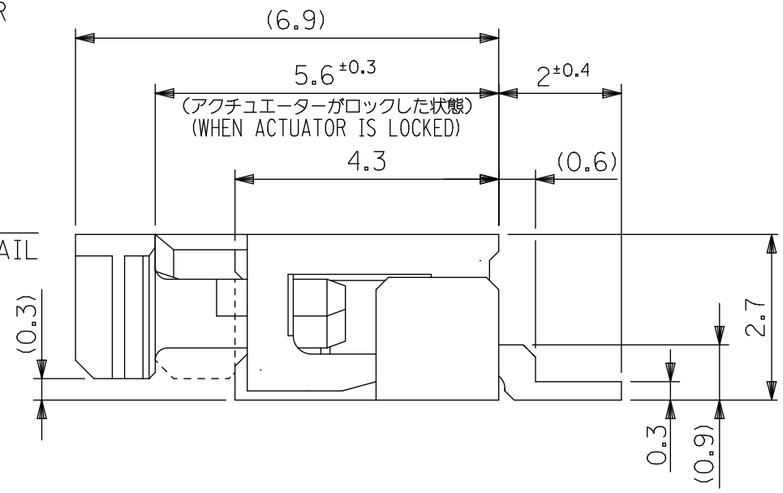

38.7	35.2	33	52207-3485	34
34.7	31.2	29	52207-3085	30
33.7	30.2	28	52207-2985	29
32.7	29.2	27	52207-2885	28
31.7	28.2	26	52207-2785	27
30.7	27.2	25	52207-2685	26
29.7	26.2	24	52207-2585	25
28.7	25.2	23	52207-2485	24
27.7	24.2	22	52207-2385	23
26.7	23.2	21	52207-2285	22
25.7	22.2	20	52207-2185	21
24.7	21.2	19	52207-2085	20
23.7	20.2	18	52207-1985	19
22.7	19.2	17	52207-1885	18
21.7	18.2	16	52207-1785	17
20.7	17.2	15	52207-1685	16
19.7	16.2	14	52207-1585	15
18.7	15.2	13	52207-1485	14
17.7	14.2	12	52207-1385	13
16.7	13.2	11	52207-1285	12
15.7	12.2	10	52207-1185	11
14.7	11.2	9	52207-1085	10
13.7	10.2	8	52207-0985	9
12.7	9.2	7	52207-0885	8
11.7	8.2	6	52207-0785	7
10.7	7.2	5	52207-0685	6
9.7	6.2	4	52207-0585	5
8.7	5.2	3	52207-0485	4
7.7	4.2	2	52207-0385	3
C	B	A	EMBOSSED PACKAGE ORDER NO.	極 数 CIRCUITS

CONNECTOR SERIES NO. 52207-**19

GENERAL TOLERANCES (UNLESS SPECIFIED)	
10^{UNDER}	±0.2
10^{OVER} 30^{UNDER}	±0.25
30^{OVER}	±0.3
ANGULAR	±3 °

THIS DRAWING CONTAINS INFORMATION THAT IS PROPRIETARY TO MOLEX ELECTRONIC TECHNOLOGIES, LLC AND SHOULD NOT BE USED WITHOUT WRITTEN PERMISSION

DIMENSION UNITS	SCALE
mm	NTS

GENERAL TOLERANCES (UNLESS SPECIFIED)

ANGULAR TOL	±	°
4 PLACES	±	
3 PLACES	±	
2 PLACES	±	
1 PLACE	±	
0 PLACES	±	

DRAFT WHERE APPLICABLE MUST REMAIN WITHIN DIMENSIONS

CURRENT REV DESC:

EC NO: 758488
DRWN: RAJMOK 2023/07/24
CHK'D: HSHIMOYAMA 2023/08/03
APPR: YNAITO 2023/08/03

INITIAL REVISION:
DRWN: MNINOMIYA 2004/02/18
APPR: MSASAO 2004/02/18

THIRD ANGLE PROJECTION | DRAWING: A3-SIZE | SERIES: 52207

molex

1.0 PITCH FPC CONN.
ZIF SMT -LEAD FREE-

PRODUCT CUSTOMER DRAWING

DOCUMENT NUMBER	DOC TYPE	DOC PART	REVISION
SD-52207-060	PSD	001	G

MATERIAL NUMBER	CUSTOMER	SHEET NUMBER
SEE TABLE	GENERAL MARKET	1 OF 2

DOCUMENT STATUS	P1	RELEASE DATE	2023/08/03 11:20:27

FORMAT: master-ib-prod-A3
REVISION: J1
DATE: 2021/05/01

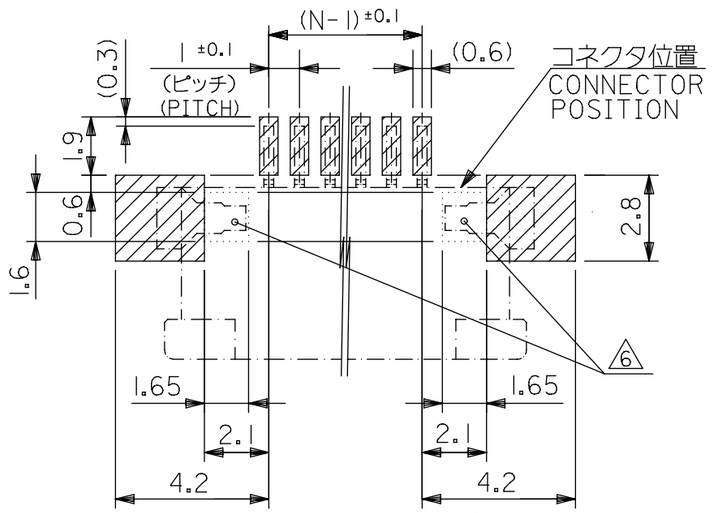

パターン推奨寸法（参考）
RECOMMENDED PATTERN DIM.(REF.)

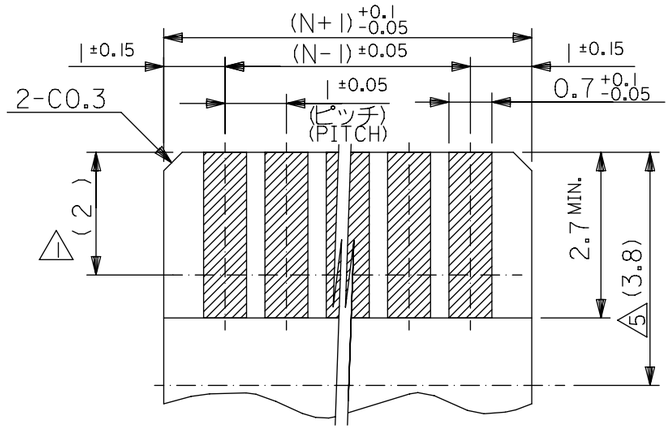

（仕上り厚さ：0．3±0.05）
(THICKNESS：0．3±0.05)
適合ＦＰＣ／ＦＦＣ推奨寸法
RECOMMENDED APPLICABLE FPC/FFC LAYOUT

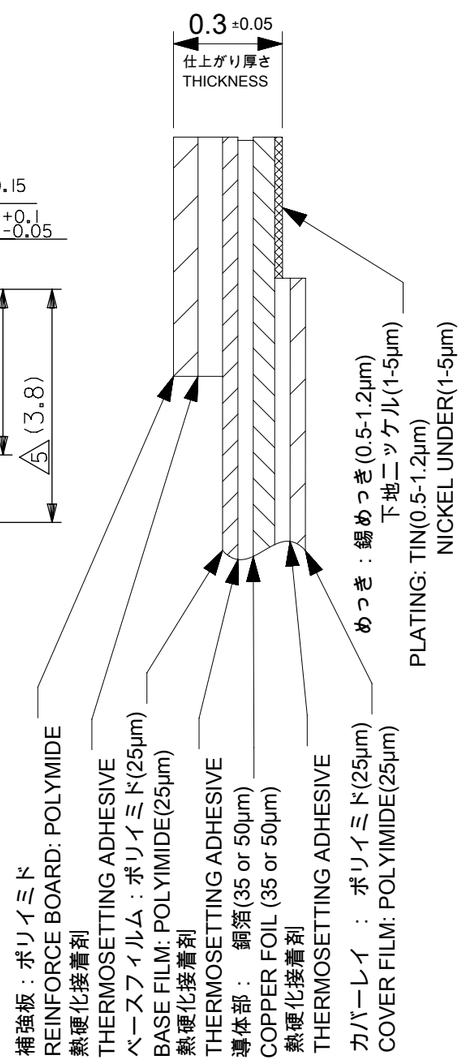

FPC構成推奨仕様
RECOMMENDED STRUCTURE OF FPC

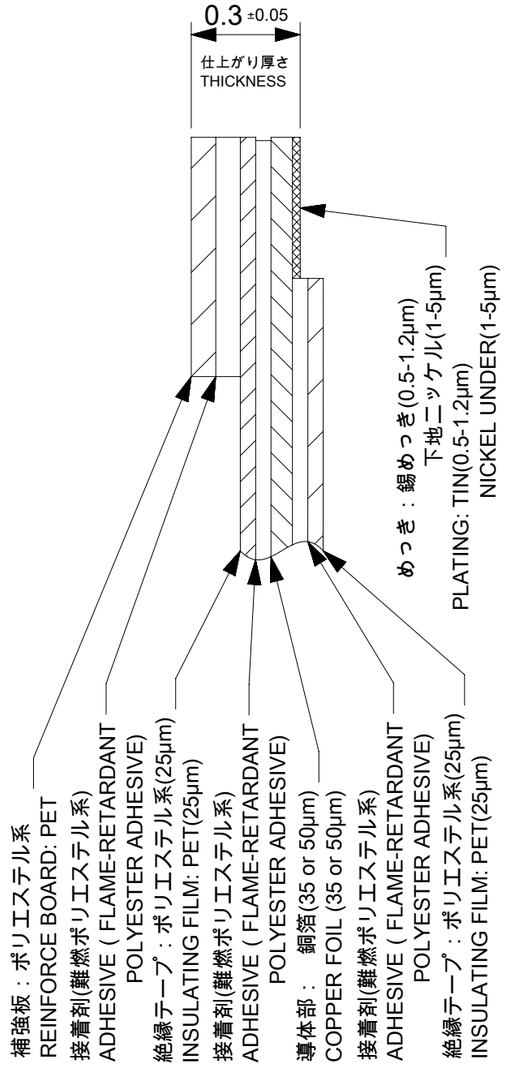

FFC構成推奨仕様
RECOMMENDED STRUCTURE OF FFC

注記 NOTES

1 接点部までの嵌合長さ。
LENGTH TO CONTACT POINT.

2．使用材料 MATERIAL

ハウジング HOUSING	：46ナイロン（耐熱性），UL94V-0 ：46NYLON, UL94V-0
アクチュエータ ACTUATOR	：PPS，UL94V-0 ：PPS, UL94V-0
ターミナル TERMINAL	：リン青銅 ：PHOSPHOR BRONZE
	：錫・ビスマスメッキ 1.0マイクロメートル以上 ：TIN BISMUTH 1.0 MICROMETER MINIMUM
	：ニッケル下地 1．0マイクロメートル以上 ：NICKEL(UNDER PLATING) 1.0 MICROMETER MINIMUM
金具 FITTING NAIL	：銅合金 ：COPPER ALLOY
	：錫メッキ 1．0マイクロメートル以上 ：TIN 1.0 MICROMETER MINIMUM
	：ニッケル下地 1．0マイクロメートル以上 ：NICKEL(UNDER PLATING) 1.0 MICROMETER MINIMUM

3 パターンはくり止め用金具
FITTING NAIL FOR PREVENTION OF PEELING OF P.C.B.PATTERN.

4．エンボステープ梱包時は，アクチュエータがロックした状態とする。
IN THE PACKAGE, ACTUATOR OF PART NO. 52207-**19 SHOULD BE LOCKED.

5 ケーブル挿入深さ
INSERTION DEPTH OF CABLE.

6 パターン書き込み禁止エリア。
NO FOOT PRINT AREA.

7．本製品は 52207-**17 の鉛フリー品である。
THIS PRODUCT IS LEAD FREE OF 52207-**17.

8．ELV及びRoHS適合品
ELV AND RoHS COMPLIANT

ＦＰＣについて：
打抜き方向は導体側から補強板を推奨致します。
補強フィルム材質はポリイミドを推奨致します。
接着剤は熱硬化接着剤を推奨致します。
ABOUT FPC:
RECOMMENDED PUNCHER DIRECTION : FROM CONDUCTOR SIDE TO STIFFENER BOARD SIDE.
RECOMMENDED MATERIAL :
STIFFENER FILM : POLYIMIDE
BONDING AGENT : THERMOSETTING BONDING AGENT

GENERAL TOLERANCES (UNLESS SPECIFIED)	
10 UNDER	±0.2
10 OVER 30 UNDER	±0.25
30 OVER	±0.3
ANGULAR	±3 °

THIS DRAWING CONTAINS INFORMATION THAT IS PROPRIETARY TO MOLEX ELECTRONIC TECHNOLOGIES, LLC AND SHOULD NOT BE USED WITHOUT WRITTEN PERMISSION

DIMENSION UNITS	SCALE
mm	NTS

GENERAL TOLERANCES (UNLESS SPECIFIED)

ANGULAR TOL	± °
4 PLACES	±
3 PLACES	±
2 PLACES	±
1 PLACE	±
0 PLACES	±

DRAFT WHERE APPLICABLE MUST REMAIN WITHIN DIMENSIONS

CURRENT REV DESC:

EC NO: 758488
DRWN: RAJMOK 2023/07/24
CHK'D: HSHIMOYAMA 2023/08/03
APPR: YNAITO 2023/08/03

INITIAL REVISION:
DRWN: MNINOMIYA 2004/02/18
APPR: MSASAO 2004/02/18

THIRD ANGLE PROJECTION | DRAWING: A3-SIZE | SERIES: 52207

molex

1.0 PITCH FPC CONN.
ZIF SMT -LEAD FREE-

PRODUCT CUSTOMER DRAWING

DOCUMENT NUMBER	DOC TYPE	DOC PART	REVISION
SD-52207-060	PSD	001	G

MATERIAL NUMBER	CUSTOMER	SHEET NUMBER
SEE SHEET 1	GENERAL MARKET	2 OF 2

DOCUMENT STATUS	P1	RELEASE DATE	2023/08/03 11:20:27

FORMAT: master-tb-prod-A3
REVISION: J1
DATE: 2021/05/01

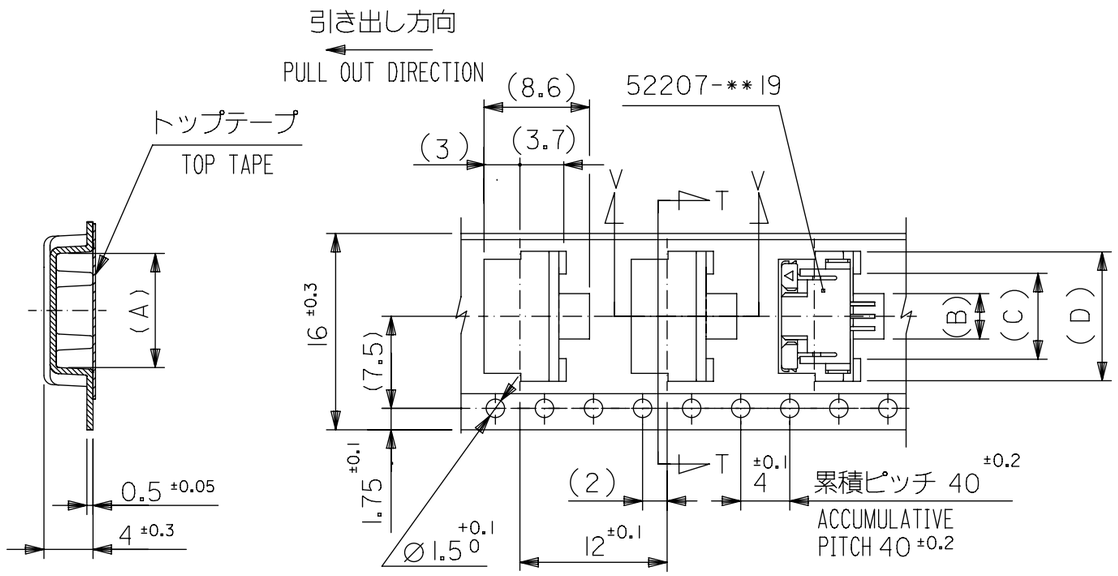

SECT:T-T

16mm 幅 キャリアテープ

16mm WIDTH CARRIER TAPE

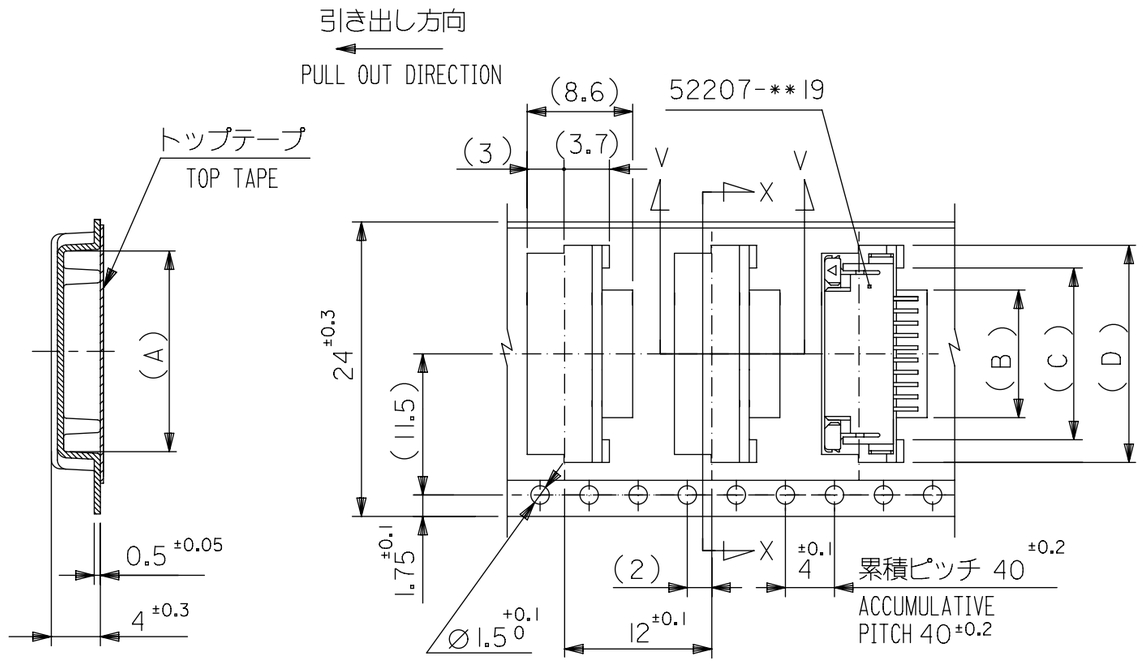

SECT:X-X

24mm 幅 キャリアテープ

24mm WIDTH CARRIER TAPE

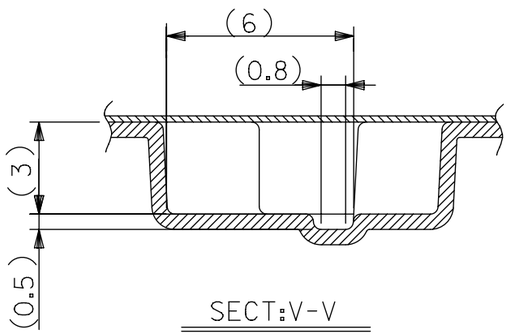

SECT:V-V

MODEL NO.	キャリアテープ幅 CARRIER TAPE WIDTH	H	E	(D)	(C)	(B)	(A)	MATERIAL NO.	極数 CKT.
52207-**85	16	21.4	17.4	10.5	7	3.7	9.3	52207-0385	3
	24	29.4	25.4	11.5	8	4.7	10.3	-0485	4
				12.5	9	5.7	11.3	-0585	5
				13.5	10	6.7	12.3	-0685	6
				14.5	11	7.7	13.3	-0785	7
				15.5	12	8.7	14.3	-0885	8
				16.5	13	9.7	15.3	-0985	9
				17.5	14	10.7	16.3	-1085	10
				18.5	15	11.7	17.3	52207-1185	11

THIS DRAWING CONTAINS INFORMATION THAT IS PROPRIETARY TO MOLEX ELECTRONIC TECHNOLOGIES, LLC AND SHOULD NOT BE USED WITHOUT WRITTEN PERMISSION

GENERAL TOLERANCES (UNLESS SPECIFIED)	
10^{UNDER}	±0.2
10^{OVER} 30^{UNDER}	±0.25
30^{OVER}	±0.3
ANGULAR	±3 °

DIMENSION UNITS: mm
SCALE: NTS
GENERAL TOLERANCES (UNLESS SPECIFIED)
ANGULAR TOL ± °
4 PLACES ±
3 PLACES ±
2 PLACES ±
1 PLACE ±
0 PLACES ±
DRAFT WHERE APPLICABLE MUST REMAIN WITHIN DIMENSIONS

CURRENT REV DESC:
EC NO: 719890
DRWN: NARENC 2022/08/22
CHK'D: SMARUYAMA 2022/09/05
APPR: YNAITO 2022/09/05

INITIAL REVISION:
DRWN: MNINOMIYA 2004/02/18
APPR: MSASAO 2004/02/18

THIRD ANGLE PROJECTION
DRAWING: A3-SIZE
SERIES: 52207

molex

EMBOSSED TAPE PACKAGE
FOR 52207-**19 -LEAD FREE-

PRODUCT CUSTOMER DRAWING

DOCUMENT NUMBER	DOC TYPE	DOC PART	REVISION
SD-52207-061	PSD	001	D

MATERIAL NUMBER	CUSTOMER	SHEET NUMBER
SEE TABLE	GENERAL MARKET	1 OF 3

DOCUMENT STATUS	P1	RELEASE DATE	2022/09/05 05:51:49

FORMAT: master_mx-A3
REVISION: J1
DATE: 2021/05/07

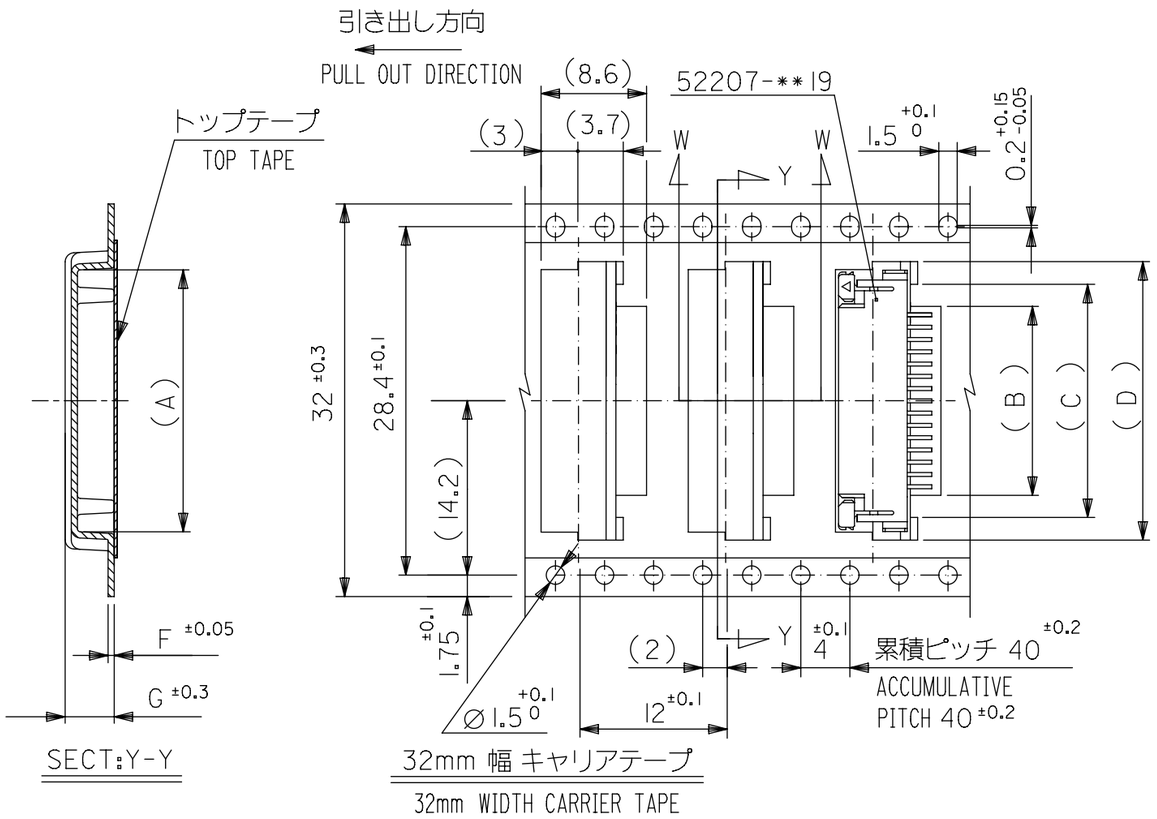

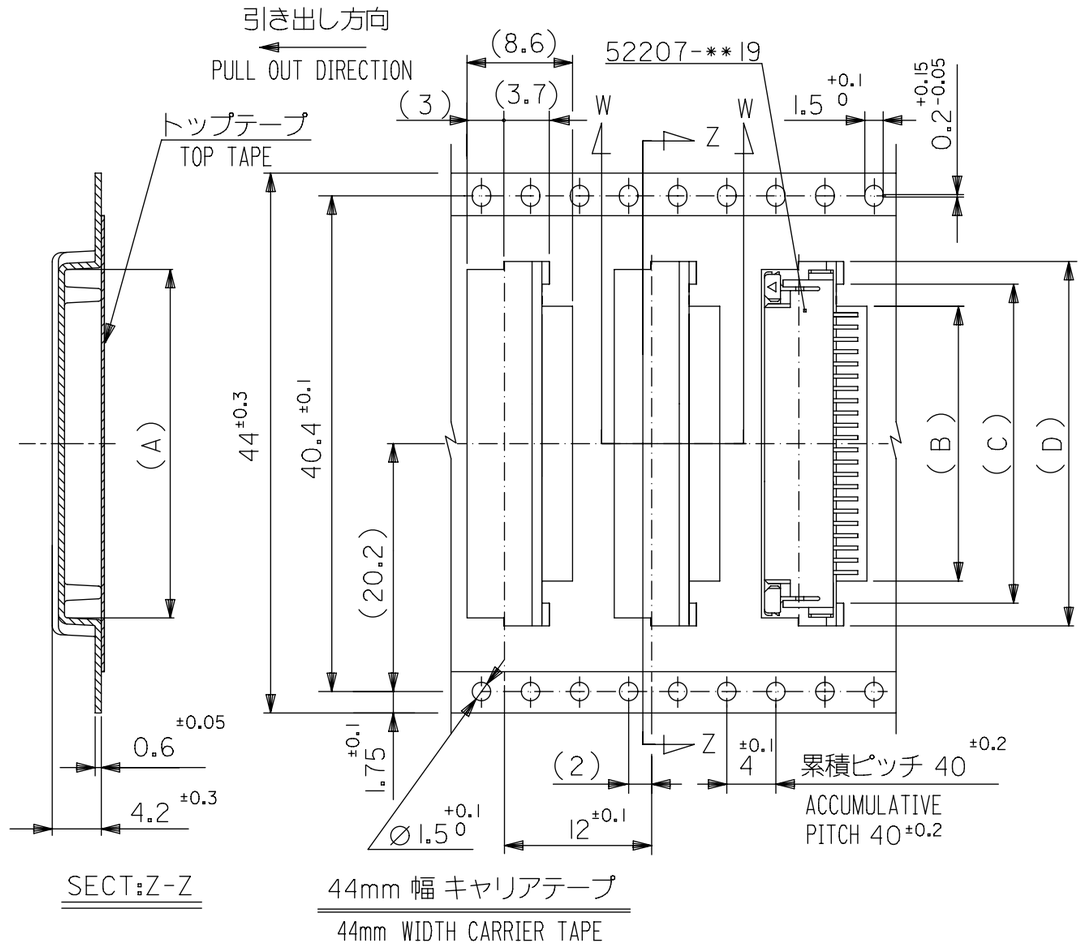

32	37.4	33.4	4.0	0.5	23.5	20	16.7	22.35	52207 -1685	16
			4.2	0.6	22.5	19	15.7	21.35	4 -1585	15
			4.2	0.6	21.5	18	14.7	20.35	-1485	14
			4.2	0.6	20.5	17	13.7	19.35	7 -1385	13
			4.2	0.6	19.5	16	12.7	18.35	52207 -1285	12
キャリアテープ幅 CARRIER TAPE WIDTH	H	E	(G)	(F)	(D)	(C)	(B)	(A)	MATERIAL NO.	極数 CKT.

44	49.4	45.4	34.5	31	27.7	33.35	52207-2785		27
			33.5	30	26.7	32.35	4 -2685		26
			32.5	29	25.7	31.35	-2585		25
			31.5	28	24.7	30.35	-2485		24
			30.5	27	23.7	29.35	-2385		23
			29.5	26	22.7	28.35	-2285		22
			28.5	25	21.7	27.35	-2185		21
			27.5	24	20.7	26.35	-2085		20
			26.5	23	19.7	25.35	-1985		19
			25.5	22	18.7	24.35	7 -1885		18
			24.5	21	17.7	23.35	52207 -1785		17
キャリアテープ幅 CARRIER TAPE WIDTH	H	E	(D)	(C)	(B)	(A)	MATERIAL NO.		極数 CKT.

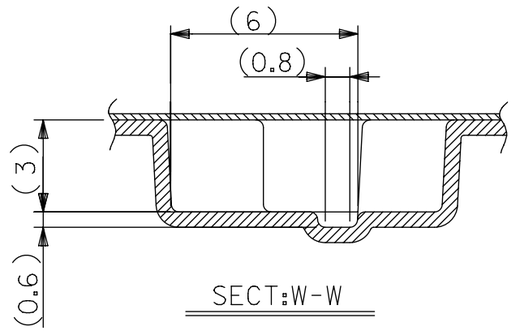

52207-**85
MODEL NO.

GENERAL TOLERANCES (UNLESS SPECIFIED)	
10 UNDER	±0.2
10 OVER 30 UNDER	±0.25
30 OVER	±0.3
ANGULAR	±3 °

THIS DRAWING CONTAINS INFORMATION THAT IS PROPRIETARY TO MOLEX ELECTRONIC TECHNOLOGIES, LLC AND SHOULD NOT BE USED WITHOUT WRITTEN PERMISSION

DIMENSION UNITS	SCALE
mm	NTS

GENERAL TOLERANCES (UNLESS SPECIFIED)
ANGULAR TOL ± °
4 PLACES ±
3 PLACES ±
2 PLACES ±
1 PLACE ±
0 PLACES ±
DRAFT WHERE APPLICABLE MUST REMAIN WITHIN DIMENSIONS

CURRENT REV DESC:
EC NO: 719890
DRWN: NARENC 2022/08/22
CHK'D: SMARUYAMA 2022/09/05
APPR: YNAITO 2022/09/05
INITIAL REVISION:
DRWN: MNINOMIYA 2004/02/18
APPR: MSASAO 2004/02/18

molex

EMBOSSED TAPE PACKAGE
FOR 52207-**19 -LEAD FREE-

PRODUCT CUSTOMER DRAWING

DOCUMENT NUMBER	DOC TYPE	DOC PART	REVISION
SD-52207-061	PSD	001	D

THIRD ANGLE PROJECTION	DRAWING	SERIES	MATERIAL NUMBER	CUSTOMER	SHEET NUMBER
	A3-SIZE	52207	SEE TABLE	GENERAL MARKET	2 OF 3

DOCUMENT STATUS	P1	RELEASE DATE	2022/09/05 05:51:49

FORMAT: master-Sized-A3
REVISION: J1
DATE: 2021/05/05

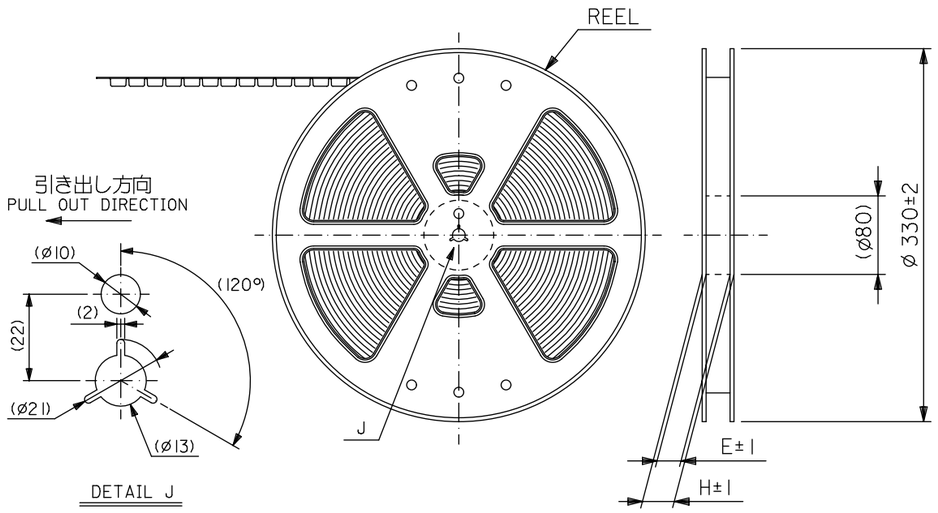

注記

1. 製品番号 52207-**19 の梱包状態はアクチュエータがロックした状態とする。
詳細寸法については図面 SD-52207-060 を参照下さい。
IN THE PACKAGE , ACTUATOR OF PART NO. 52207-**19 SHOULD BE LOCKED
RE DETAILED DIMENSIONS , SEE SD-52207-060
2. 梱包数量：１０００個／リール
NUMBER OF CONNECTORS : 1000PCS/REEL
3. リードテープ長さ(LEAD TAPE LENGTH)

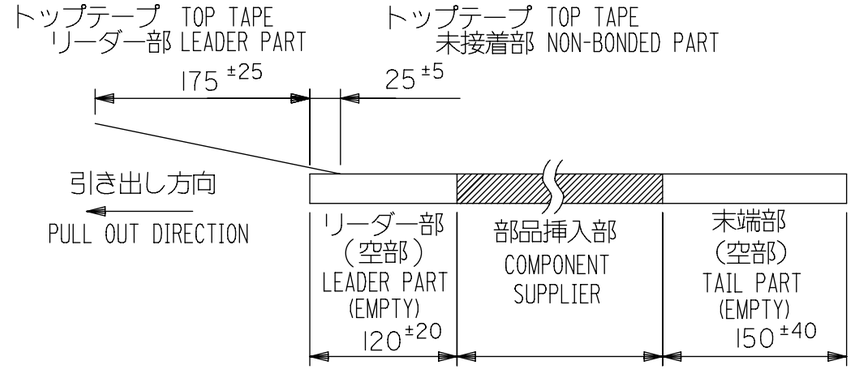

4. トップテープの剥離強度：（剥離方向は下図参照）
0.1N ～1.3N{10gf ～130gf}MAX.尚、本規格値は、出荷時に適用。
（但し、輸送時に剥離が発生しない事。）
PEELING OFF FORCE OF TOP TAPE :0.1N ～1.3N{10gf ～130gf} MAX.
(PEELING DIRECTION AS SHOWN IN FOLLOWING FIG.)
THIS REQUIREMENT SHOULD BE APPLIED AT SHIPMENT.(PEEL OFF SHOULD NOT BE ALLOWED , DURING TRANSPORTATION.)

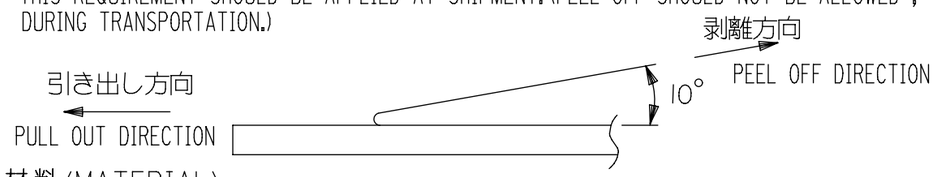

5. 材料(MATERIAL)
キャリアテープ(CARRIER TAPE)：ポリプロピレン(POLYPROPYLENE)
トップテープ (TOPTAPE)：PET, PE, PEF
リール(REEL)：ポリスチレン(PS)〈リサイクル材を含む〉
POLYSTYRENE (PS)〈RECYCLE MATERIAL CONTAINED〉

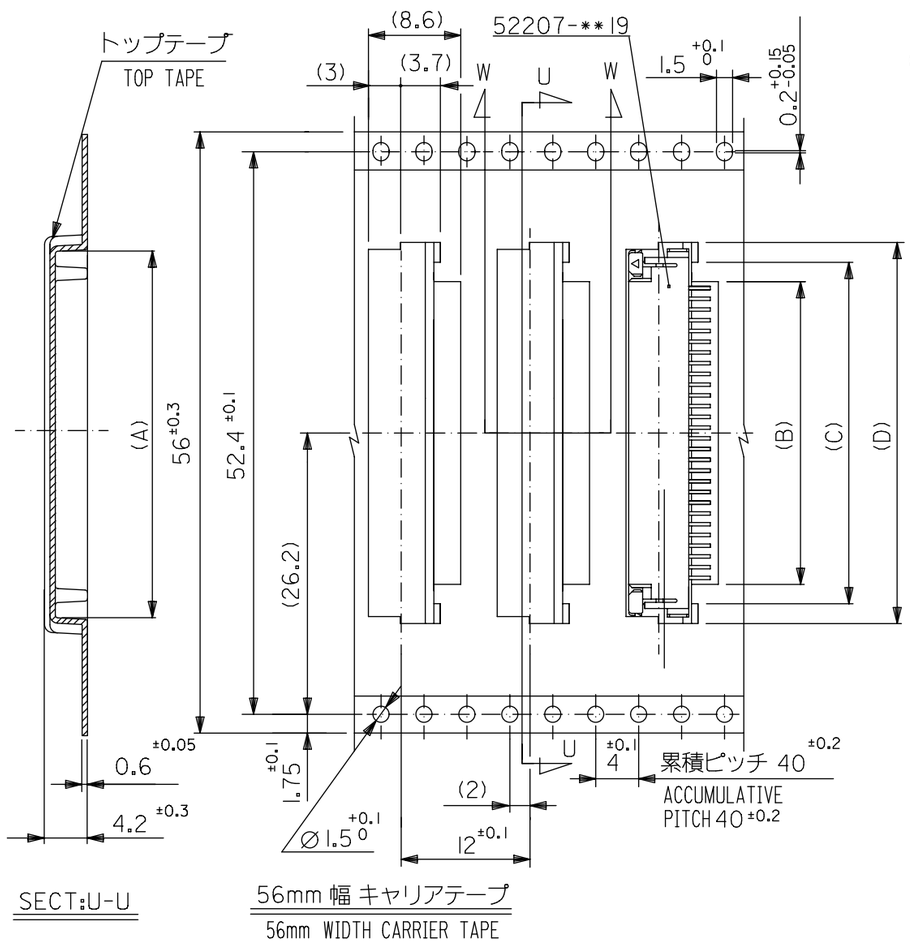

6. 本製品は 52207-**90 の鉛フリー品である。
THIS PRODUCT IS LEAD FREE OF 52207-**90.

7. 本製品は乾燥剤入り、ハイバリア梱包仕様である。
THIS PRODUCT IS HIGH BARRIER
PACKAGE WITH DESICCANT.

MODEL NO.	キャリアテープ幅 CARRIER TAPE WIDTH	H	E	(D)	(C)	(B)	(A)	MATERIAL NO.	極数 CKT.
52207-**85	56	61.4	57.4	41.5	38	34.7	40.35	52207-3485	34
				37.5	34	30.7	36.35	52207-3085	30
				36.5	33	29.7	35.35	52207-2985	29
				35.5	32	28.7	34.35	52207-2885	28

GENERAL TOLERANCES (UNLESS SPECIFIED)	
10 UNDER	±0.2
10 OVER 30 UNDER	±0.25
30 OVER	±0.3
ANGULAR	±3 °

THIS DRAWING CONTAINS INFORMATION THAT IS PROPRIETARY TO MOLEX ELECTRONIC TECHNOLOGIES, LLC AND SHOULD NOT BE USED WITHOUT WRITTEN PERMISSION

DIMENSION UNITS: mm
SCALE: NTS
GENERAL TOLERANCES (UNLESS SPECIFIED)
ANGULAR TOL ± °
4 PLACES ±
3 PLACES ±
2 PLACES ±
1 PLACE ±
0 PLACES ±
DRAFT WHERE APPLICABLE MUST REMAIN WITHIN DIMENSIONS

CURRENT REV DESC:
EC NO: 719890
DRWN: NARENC 2022/08/22
CHK'D: SMARUYAMA 2022/09/05
APPR: YNAITO 2022/09/05
INITIAL REVISION:
DRWN: MNINOMIYA 2004/02/18
APPR: MSASAO 2004/02/18

molex

EMBOSSED TAPE PACKAGE
FOR 52207-**19 -LEAD FREE-

PRODUCT CUSTOMER DRAWING

DOCUMENT NUMBER	DOC TYPE	DOC PART	REVISION
SD-52207-061	PSD	001	D

THIRD ANGLE PROJECTION	DRAWING	SERIES	MATERIAL NUMBER	CUSTOMER	SHEET NUMBER
	A3-SIZE	52207	SEE TABLE	GENERAL MARKET	3 OF 3

DOCUMENT STATUS	P1	RELEASE DATE	2022/09/05 05:51:49

FORMAT: master-landscape-A3
REVISION: J1
DATE: 2021/05/07