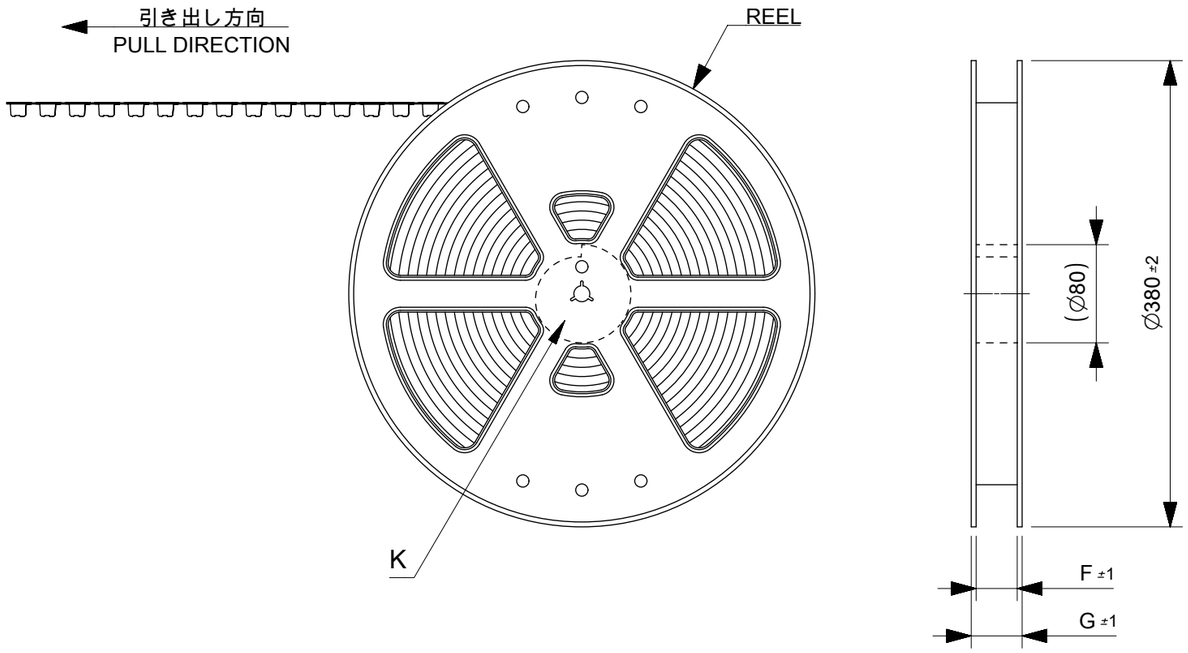

NOTES
1. 製品詳細寸法については 5019511005-SDを参照下さい。
FOR DIMENSIONS OF PRODUCT, REFER TO 5019511005-SD.
2. 梱包数量 : 2000個/リール
NUMBER OF CONNECTORS : 2000PIECES/REEL
3. リードテープ長さ
LEAD TAPE LENGTH

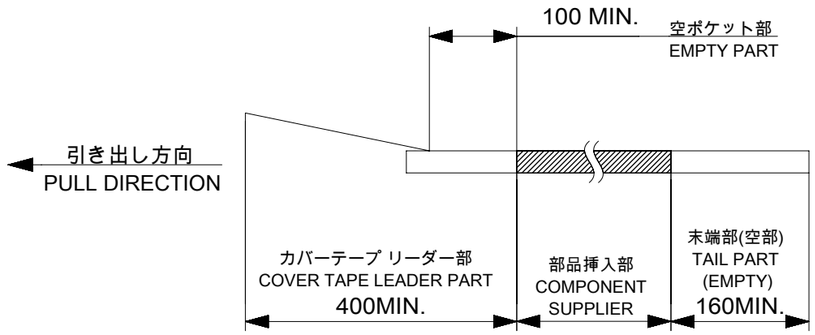

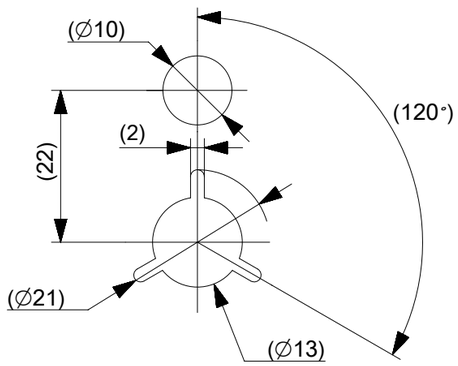

DETAIL K

4.カバーテープの剥離強度については、IEC60286-3に準拠。
COVER TAPE PEEL FORCE IS DEFINED BY IEC60286-3.
5.材料 MATERIAL
キャリアテープ : ポリスチレン
CARRIER TAPE : POLYSTYRENE
カバーテープ : ポリエチレンテレフタレート、ポリエチレン
COVER TAPE : POLYETHYLENE TEREPHTHALATE , POLYETHYLENE
リール : ポリスチレン<リサイクル材を含む>
REEL : POLYSTYRENE<RECYCLE MATERIAL CONTAINED>

THIS DRAWING CONTAINS INFORMATION THAT IS PROPRIETARY TO MOLEX ELECTRONIC TECHNOLOGIES, LLC AND SHOULD NOT BE USED WITHOUT WRITTEN PERMISSION

DIMENSION UNITS	SCALE
mm	1:1

GENERAL TOLERANCES (UNLESS SPECIFIED)		
ANGULAR TOL	±	1.0 °
4 PLACES	±	0.2
3 PLACES	±	0.2
2 PLACES	±	0.2
1 PLACE	±	0.25
0 PLACES	±	0.3

DRAFT WHERE APPLICABLE MUST REMAIN WITHIN DIMENSIONS

CURRENT REV DESC:

EC NO: 611684
DRWN: SKAWAKAMI 2019/02/07
CHK'D: TRSUZUKI 2019/02/07
APPR: RTAKEUCHI 2019/02/08

INITIAL REVISION:
DRWN: SKAWAKAMI 2019/01/28
APPR: RTAKEUCHI 2019/02/01

THIRD ANGLE PROJECTION | DRAWING: A3-SIZE | SERIES: 501951

molex

0.5 FPC CONN. EMBSTP PKG
EASY ON VERTICAL (LOW-HALOGEN)

PRODUCT CUSTOMER DRAWING

DOCUMENT NUMBER	DOC TYPE	DOC PART	REVISION
5019510005-SD	PSD	000	B

MATERIAL NUMBER	CUSTOMER	SHEET NUMBER
SEE TABLE		1 OF 3

DOCUMENT STATUS	P1	RELEASE DATE	2019/02/08 03:26:14

FORMAT: master-tb-prod-A3
REVISION: H
DATE: 2018/01/18

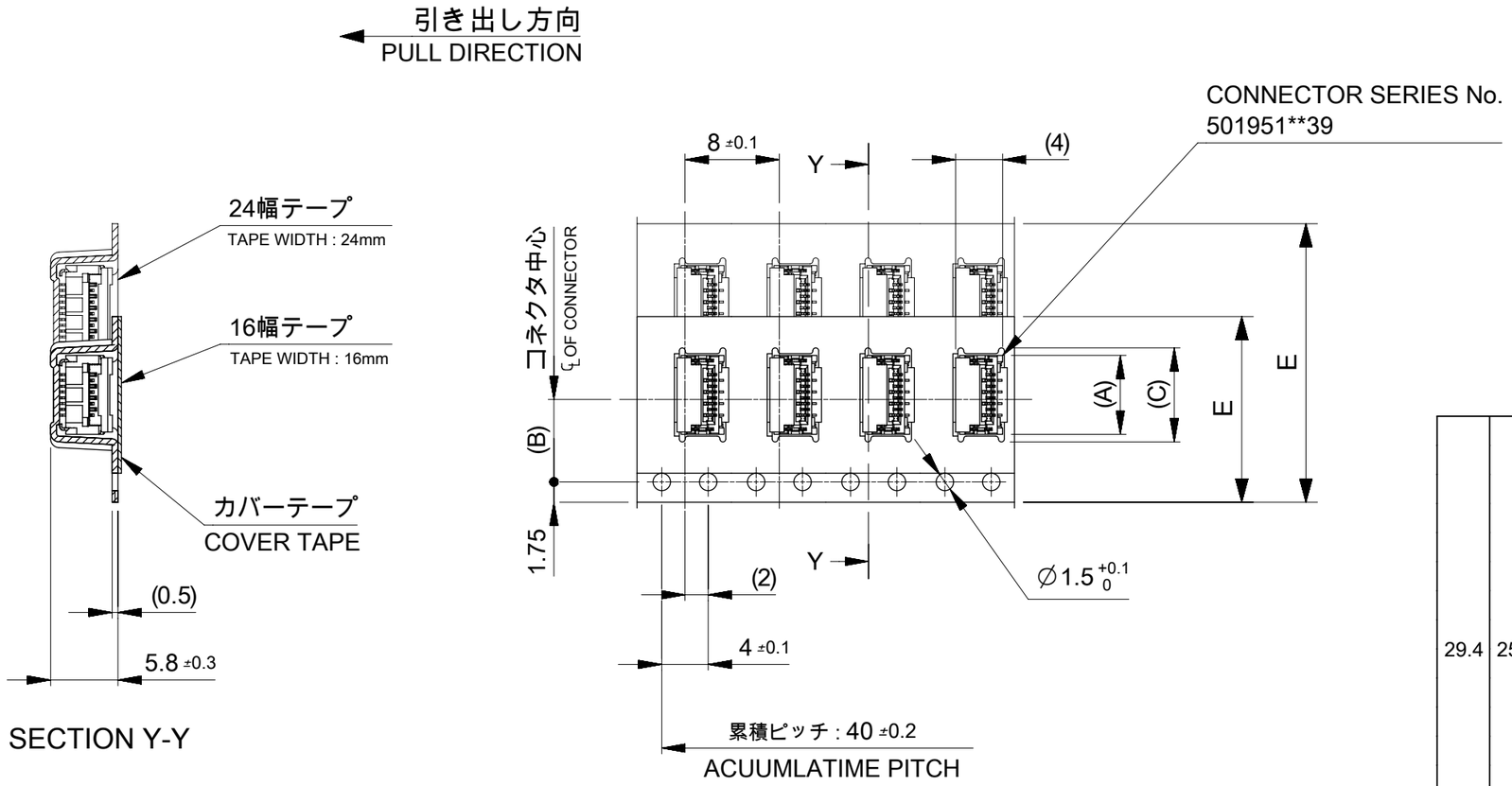

G	F	E CARRIER TAPE WIDTH	D	(C)	(B)	(A)	EMBOSSED PACKAGE ORDER NO.	CIRCUITS
29.4	25.4	24	—	15.1	11.5	14.1	5019512230	22
				14.6		13.6	5019512130	21
				14.1		13.1	5019512030	20
				13.6		12.6	5019511930	19
				13.1		12.1	5019511830	18
				12.6		11.6	5019511730	17
				12.1		11.1	5019511630	16
				11.6		10.6	5019511530	15
				11.1		10.1	5019511430	14
				10.6		9.6	5019511330	13
				10.1		9.1	5019511230	12
				9.6		8.6	5019511130	11
				9.1		8.1	5019511030	10
				8.6		7.6	5019510930	9
				8.1		7.1	5019510830	8
				7.6		6.6	5019510730	7
21.4	17.4	16		7.1	7.5	6.1	5019510630	6
				6.6		5.6	5019510530	5
				6.1		5.1	5019510430	4

THIS DRAWING CONTAINS INFORMATION THAT IS PROPRIETARY TO MOLEX ELECTRONIC TECHNOLOGIES, LLC AND SHOULD NOT BE USED WITHOUT WRITTEN PERMISSION

DIMENSION UNITS	SCALE
mm	1:1

GENERAL TOLERANCES (UNLESS SPECIFIED)		
ANGULAR TOL	±	1.0 °
4 PLACES	±	0.2
3 PLACES	±	0.2
2 PLACES	±	0.2
1 PLACE	±	0.25
0 PLACES	±	0.3

DRAFT WHERE APPLICABLE MUST REMAIN WITHIN DIMENSIONS

CURRENT REV DESC:

EC NO: 611684
DRWN: SKAWAKAMI 2019/02/07
CHK'D: TRSUZUKI 2019/02/07
APPR: RTAKEUCHI 2019/02/08

INITIAL REVISION:
DRWN: SKAWAKAMI 2019/01/28
APPR: RTAKEUCHI 2019/02/01

THIRD ANGLE PROJECTION | DRAWING: A3-SIZE | SERIES: 501951

molex

0.5 FPC CONN. EMBSTP PKG
EASY ON VERTICAL (LOW-HALOGEN)

PRODUCT CUSTOMER DRAWING

DOCUMENT NUMBER	DOC TYPE	DOC PART	REVISION
5019510005-SD	PSD	000	B

MATERIAL NUMBER	CUSTOMER	SHEET NUMBER
SEE TABLE		2 OF 3

DOCUMENT STATUS	P1	RELEASE DATE	2019/02/08 03:26:14

FORMAT: master-tb-prod-A3
REVISION: H
DATE: 2018/01/18

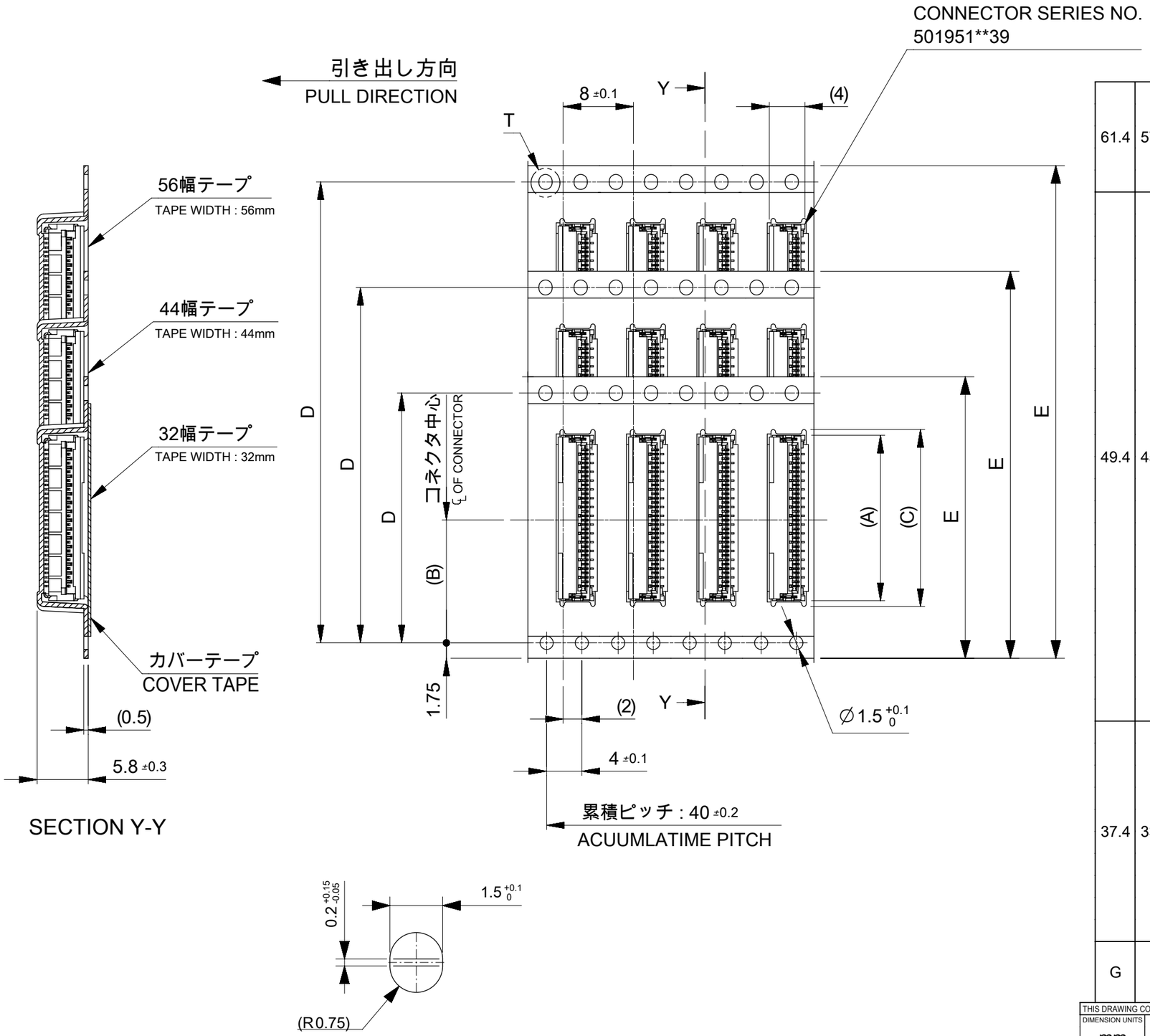

G	F	E CARRIER TAPE WIDTH	D	(C)	(B)	(A)	EMBOSSED PACKAGE ORDER NO.	CIRCUITS
61.4	57.4	56	52.4	39.1	26.2	38.1	5019517030	70
				34.1		33.1	5019516030	60
				33.6		32.6	5019515930	59
				33.1		32.1	5019515830	58
				32.6		31.6	5019515730	57
49.4	45.4	44	40.4	32.1	20.2	31.1	5019515630	56
				31.6		30.6	5019515530	55
				31.1		30.1	5019515430	54
				30.6		29.6	5019515330	53
				30.1		29.1	5019515230	52
				29.6		28.6	5019515130	51
				29.1		28.1	5019515030	50
				28.6		27.6	5019514930	49
				28.1		27.1	5019514830	48
				27.6		26.6	5019514730	47
				27.1		26.1	5019514630	46
				26.6		25.6	5019514530	45
				26.1		25.1	5019514430	44
				25.6		24.6	5019514330	43
				25.1		24.1	5019514230	42
				24.6		23.6	5019514130	41
				24.1		23.1	5019514030	40
				23.6		22.6	5019513930	39
				23.1		22.1	5019513830	38
				22.6		21.6	5019513730	37
				22.1		21.1	5019513630	36
				21.6		20.6	5019513530	35
				21.1		20.1	5019513430	34
				20.6		19.6	5019513330	33
37.4	33.4	32	28.4	20.1	14.2	19.1	5019513230	32
				19.6		18.6	5019513130	31
				19.1		18.1	5019513030	30
				18.6		17.6	5019512930	29
				18.1		17.1	5019512830	28
				17.6		16.6	5019512730	27
				17.1		16.1	5019512630	26
				16.6		15.6	5019512530	25
				16.1		15.1	5019512430	24
				15.6		14.6	5019512330	23

THIS DRAWING CONTAINS INFORMATION THAT IS PROPRIETARY TO MOLEX ELECTRONIC TECHNOLOGIES, LLC AND SHOULD NOT BE USED WITHOUT WRITTEN PERMISSION

DIMENSION UNITS	SCALE
mm	1:1

GENERAL TOLERANCES (UNLESS SPECIFIED)		
ANGULAR TOL	±	1.0 °
4 PLACES	±	0.2
3 PLACES	±	0.2
2 PLACES	±	0.2
1 PLACE	±	0.25
0 PLACES	±	0.3

DRAFT WHERE APPLICABLE MUST REMAIN WITHIN DIMENSIONS

CURRENT REV DESC:

EC NO: 611684
DRWN: SKAWAKAMI 2019/02/07
CHK'D: TRSUZUKI 2019/02/07
APPR: RTAKEUCHI 2019/02/08

INITIAL REVISION:
DRWN: SKAWAKAMI 2019/01/28
APPR: RTAKEUCHI 2019/02/01

THIRD ANGLE PROJECTION | DRAWING: A3-SIZE | SERIES: 501951

molex

0.5 FPC CONN. EMBSTP PKG
EASY ON VERTICAL (LOW-HALOGEN)

PRODUCT CUSTOMER DRAWING

DOCUMENT NUMBER	DOC TYPE	DOC PART	REVISION
5019510005-SD	PSD	000	B

MATERIAL NUMBER	CUSTOMER	SHEET NUMBER
SEE TABLE		3 OF 3

DOCUMENT STATUS	P1	RELEASE DATE	2019/02/08 03:26:14

FORMAT: master-tb-prod-A3
REVISION: H
DATE: 2018/01/18

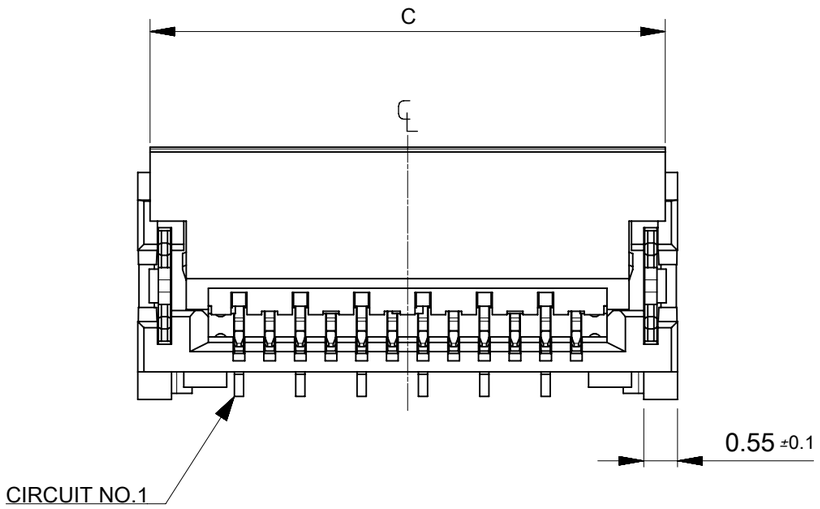

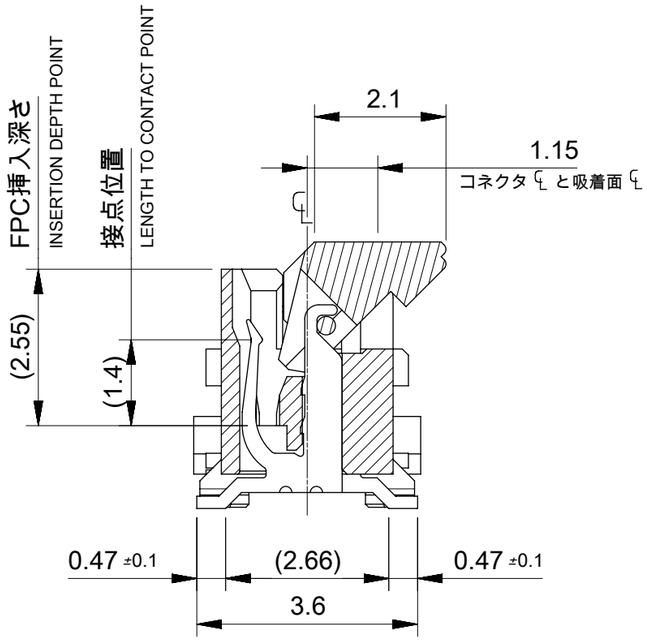

断面図（参考）

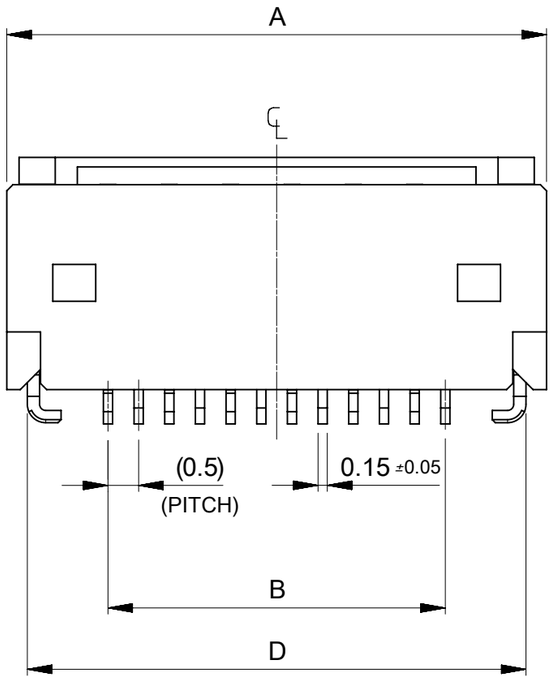

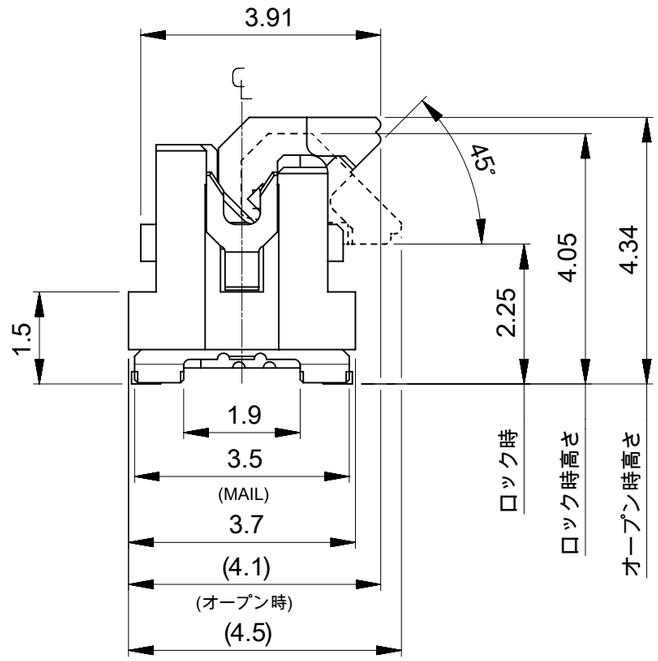

7.7	9.1	9.4	6.5	9.8	5019511430	14
7.2	8.6	8.9	6	9.3	5019511330	13
6.7	8.1	8.4	5.5	8.8	5019511230	12
6.2	7.6	7.9	5	8.3	5019511130	11
5.7	7.1	7.4	4.5	7.8	5019511030	10
5.2	6.6	6.9	4	7.3	5019510930	9
4.7	6.1	6.4	3.5	6.8	5019510830	8
4.2	5.6	5.9	3	6.3	5019510730	7
3.7	5.1	5.4	2.5	5.8	5019510630	6
3.2	4.6	4.9	2	5.3	5019510530	5
2.7	4.1	4.4	1.5	4.8	5019510430	4
E	D	C	B	A	EMBOSSED TAPE ORDER NO.	CIRCUITS

THIS DRAWING CONTAINS INFORMATION THAT IS PROPRIETARY TO MOLEX ELECTRONIC TECHNOLOGIES, LLC AND SHOULD NOT BE USED WITHOUT WRITTEN PERMISSION

DIMENSION UNITS	SCALE
mm	10:1

GENERAL TOLERANCES (UNLESS SPECIFIED)		
ANGULAR TOL	±	1.0 °
4 PLACES	±	0.2
3 PLACES	±	0.2
2 PLACES	±	0.2
1 PLACE	±	0.2
0 PLACES	±	0.2

DRAFT WHERE APPLICABLE MUST REMAIN WITHIN DIMENSIONS

CURRENT REV DESC:

EC NO: 611684
DRWN: SKAWAKAMI 2019/02/07
CHK'D: TRSUZUKI 2019/02/07
APPR: RTAKEUCHI 2019/02/08

INITIAL REVISION:
DRWN: SKAWAKAMI 2018/11/26
APPR: RTAKEUCHI 2019/02/01

THIRD ANGLE PROJECTION | DRAWING: A3-SIZE | SERIES: 501951

molex

0.5 FPC CONN. HSG ASSY
EASY ON VERTICAL (LOW-HALOGEN)

PRODUCT CUSTOMER DRAWING

DOCUMENT NUMBER	DOC TYPE	DOC PART	REVISION
5019511005-SD	PSD	000	B

MATERIAL NUMBER	CUSTOMER	SHEET NUMBER
SEE CHART		1 OF 4

DOCUMENT STATUS	P1	RELEASE DATE	2019/02/08 03:26:20

CONNECTOR SERIES NO. 501951**39

FORMAT: master-lb-prod-A3
REVISION: H
DATE: 2018/01/18

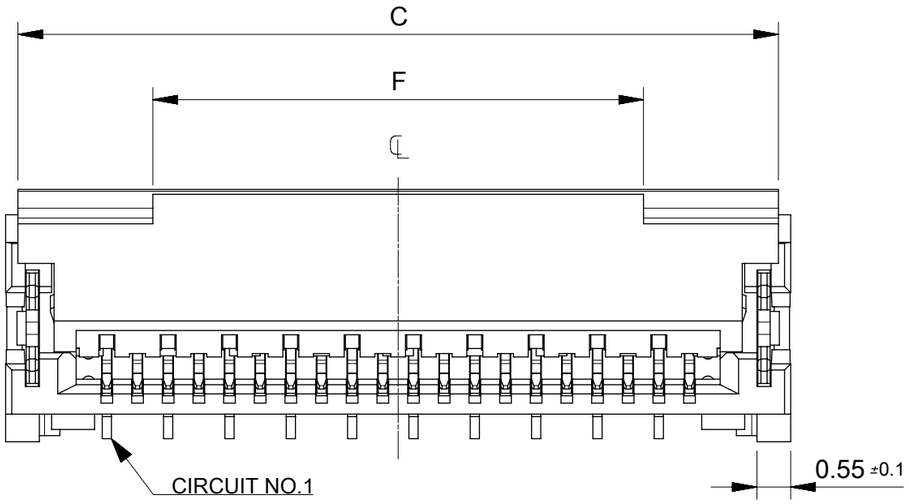

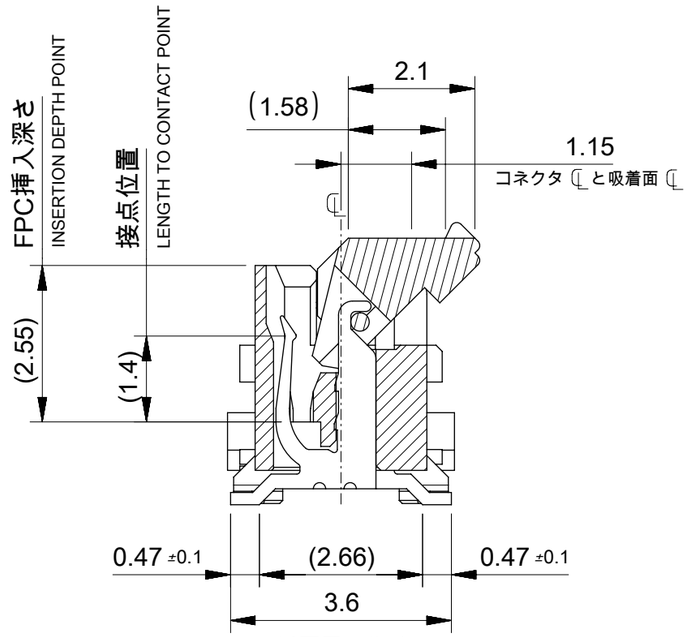

断面図（参考）

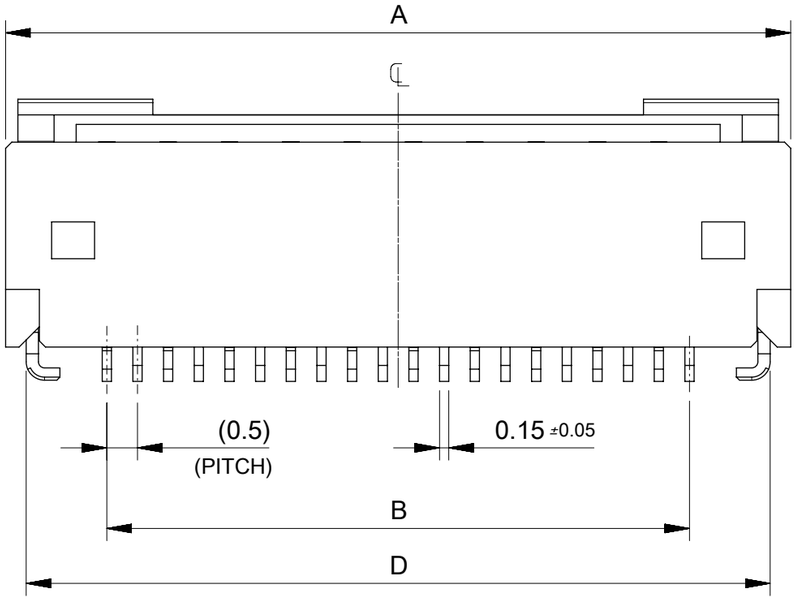

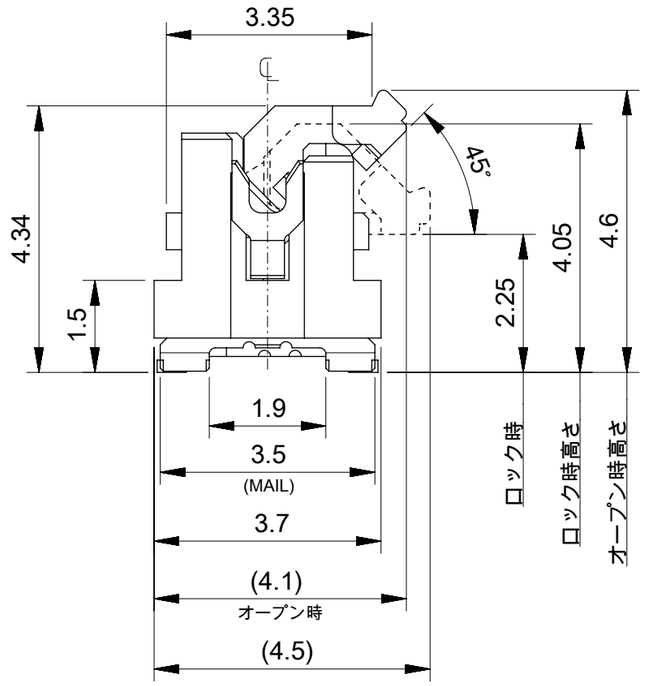

	35.7	37.1	37.4	34.5	37.8	5019517030	70
	30.7	32.1	32.4	29.5	32.8	5019516030	60
	30.2	31.6	31.9	29	32.3	5019515930	59
	29.7	31.1	31.4	28.5	31.8	5019515830	58
	29.2	30.6	30.9	28	31.3	5019515730	57
	28.7	30.1	30.4	27.5	30.8	5019515630	56
	28.2	29.6	29.9	27	30.3	5019515530	55
	27.7	29.1	29.4	26.5	29.8	5019515430	54
	27.2	28.6	28.9	26	29.3	5019515330	53
	26.7	28.1	28.4	25.5	28.8	5019515230	52
	26.2	27.6	27.9	25	28.3	5019515130	51
	25.7	27.1	27.4	24.5	27.8	5019515030	50
	25.2	26.6	26.9	24	27.3	5019514930	49
	24.7	26.1	26.4	23.5	26.8	5019514830	48
	24.2	25.6	25.9	23	26.3	5019514730	47
	23.7	25.1	25.4	22.5	25.8	5019514630	46
	23.2	24.6	24.9	22	25.3	5019514530	45
	22.7	24.1	24.4	21.5	24.8	5019514430	44
	22.2	23.6	23.9	21	24.3	5019514330	43
	21.7	23.1	23.4	20.5	23.8	5019514230	42
	21.2	22.6	22.9	20	23.3	5019514130	41
	20.7	22.1	22.4	19.5	22.8	5019514030	40
	20.2	21.6	21.9	19	22.3	5019513930	39
8	19.7	21.1	21.4	18.5	21.8	5019513830	38
	19.2	20.6	20.9	18	21.3	5019513730	37
	18.7	20.1	20.4	17.5	20.8	5019513630	36
	18.2	19.6	19.9	17	20.3	5019513530	35
	17.7	19.1	19.4	16.5	19.8	5019513430	34
	17.2	18.6	18.9	16	19.3	5019513330	33
	16.7	18.1	18.4	15.5	18.8	5019513230	32
	16.2	17.6	17.9	15	18.3	5019513130	31
	15.7	17.1	17.4	14.5	17.8	5019513030	30
	15.2	16.6	16.9	14	17.3	5019512930	29
	14.7	16.1	16.4	13.5	16.8	5019512830	28
	14.2	15.6	15.9	13	16.3	5019512730	27
	13.7	15.1	15.4	12.5	15.8	5019512630	26
	13.2	14.6	14.9	12	15.3	5019512530	25
	12.7	14.1	14.4	11.5	14.8	5019512430	24
	12.2	13.6	13.9	11	14.3	5019512330	23
	11.7	13.1	13.4	10.5	13.8	5019512230	22
	11.2	12.6	12.9	10	13.3	5019512130	21
	10.7	12.1	12.4	9.5	12.8	5019512030	20
	10.2	11.6	11.9	9	12.3	5019511930	19
	9.7	11.1	11.4	8.5	11.8	5019511830	18
	9.2	10.6	10.9	8	11.3	5019511730	17
	8.7	10.1	10.4	7.5	10.8	5019511630	16
	8.2	9.6	9.9	7	10.3	5019511530	15
F	E	D	C	B	A	EMBOSSED PACKAGE ORDER NO.	CIRCUITS

THIS DRAWING CONTAINS INFORMATION THAT IS PROPRIETARY TO MOLEX ELECTRONIC TECHNOLOGIES, LLC AND SHOULD NOT BE USED WITHOUT WRITTEN PERMISSION

DIMENSION UNITS	SCALE
mm	10:1

GENERAL TOLERANCES (UNLESS SPECIFIED)

ANGULAR TOL	±	1.0 °
4 PLACES	±	0.2
3 PLACES	±	0.2
2 PLACES	±	0.2
1 PLACE	±	0.2
0 PLACES	±	0.2

DRAFT WHERE APPLICABLE MUST REMAIN WITHIN DIMENSIONS

CURRENT REV DESC:

EC NO: 611684
DRWN: SKAWAKAMI 2019/02/07
CHK'D: TRSUZUKI 2019/02/07
APPR: RTAKEUCHI 2019/02/08

INITIAL REVISION:
DRWN: SKAWAKAMI 2018/11/26
APPR: RTAKEUCHI 2019/02/01

THIRD ANGLE PROJECTION | DRAWING: A3-SIZE | SERIES: 501951

molex

0.5 FPC CONN. HSG ASSY
EASY ON VERTICAL (LOW-HALOGEN)

PRODUCT CUSTOMER DRAWING

DOCUMENT NUMBER	DOC TYPE	DOC PART	REVISION
5019511005-SD	PSD	000	B

MATERIAL NUMBER	CUSTOMER	SHEET NUMBER
SEE CHART		2 OF 4

DOCUMENT STATUS	P1	RELEASE DATE	2019/02/08 03:26:20

CONNECTOR SERIES NO.	501951**39

FORMAT: master-tb-prod-A3
REVISION: H
DATE: 2018/01/18

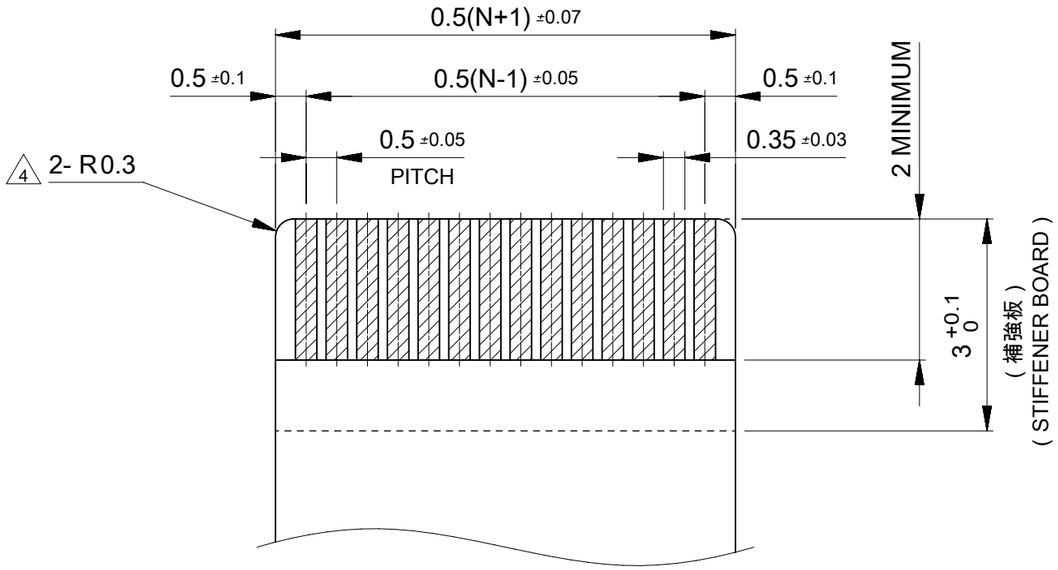

適合FPC推奨寸法
APPLICABLE FPC
RECOMMENDED DIMENSION
(仕上がり厚さ：0.3±0.05)
(THICKNESS：0.3±0.05)

N：極数
N：CIRCUITS

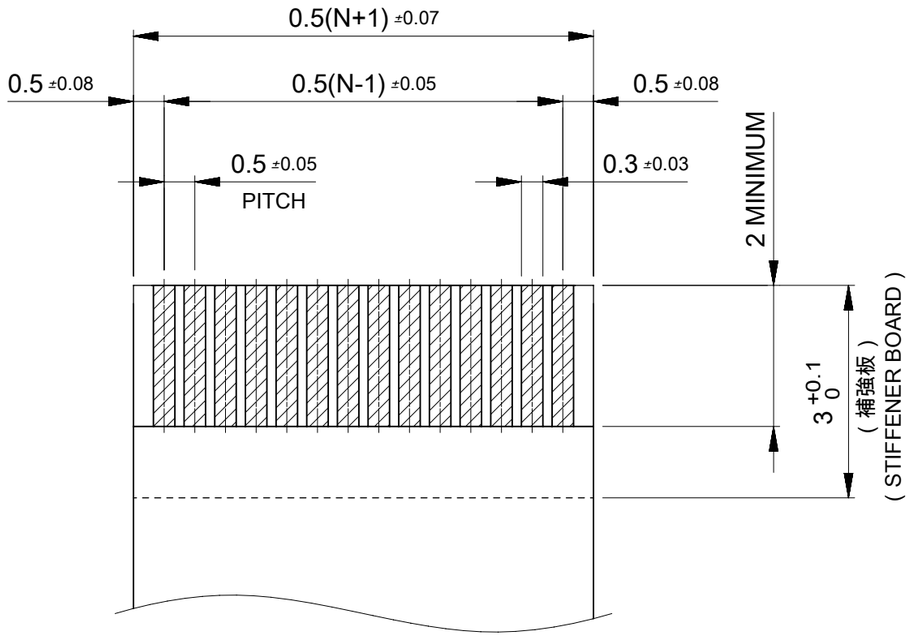

適合FFC推奨寸法
APPLICABLE FFC
RECOMMENDED DIMENSION
(仕上がり厚さ：0.3±0.05)
(THICKNESS：0.3±0.05)

N：極数
N：CIRCUITS

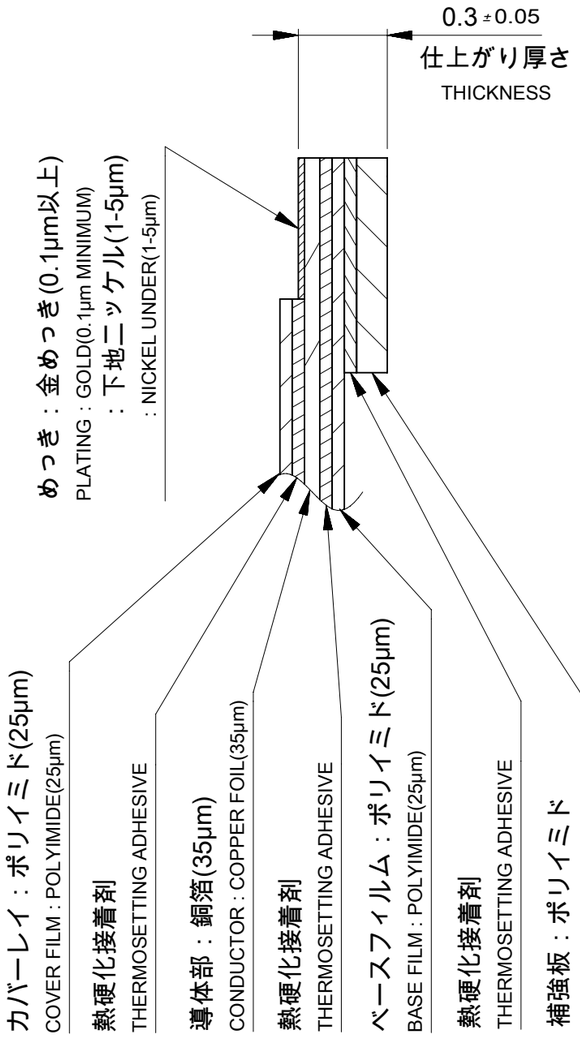

FPC構成推奨仕様
STRUCTURE OF FPC

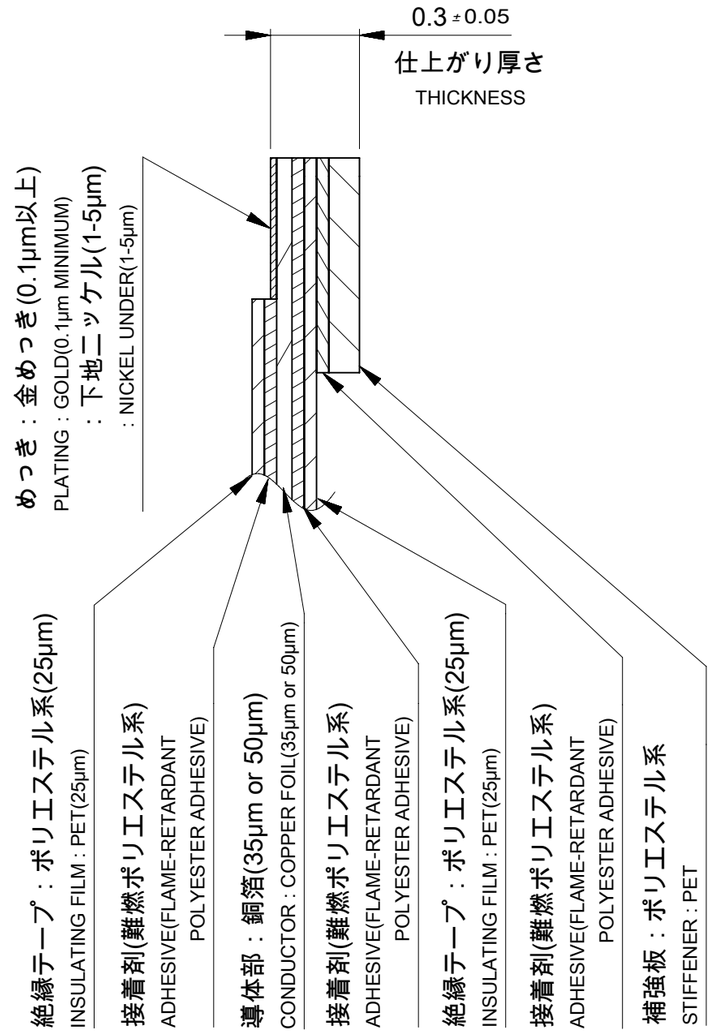

FFC構成推奨仕様
STRUCTURE OF FFC

THIS DRAWING CONTAINS INFORMATION THAT IS PROPRIETARY TO MOLEX ELECTRONIC TECHNOLOGIES, LLC AND SHOULD NOT BE USED WITHOUT WRITTEN PERMISSION

DIMENSION UNITS	SCALE
mm	10:1

GENERAL TOLERANCES (UNLESS SPECIFIED)

ANGULAR TOL	±	1.0 °
4 PLACES	±	0.2
3 PLACES	±	0.2
2 PLACES	±	0.2
1 PLACE	±	0.2
0 PLACES	±	0.2

DRAFT WHERE APPLICABLE MUST REMAIN WITHIN DIMENSIONS

CURRENT REV DESC:

EC NO: 611684
DRWN: SKAWAKAMI 2019/02/07
CHK'D: TRSUZUKI 2019/02/07
APPR: RTAKEUCHI 2019/02/08

INITIAL REVISION:
DRWN: SKAWAKAMI 2018/11/26
APPR: RTAKEUCHI 2019/02/01

THIRD ANGLE PROJECTION | DRAWING: A3-SIZE | SERIES: 501951

molex

0.5 FPC CONN. HSG ASSY
EASY ON VERTICAL (LOW-HALOGEN)

PRODUCT CUSTOMER DRAWING

DOCUMENT NUMBER	DOC TYPE	DOC PART	REVISION
5019511005-SD	PSD	000	B

MATERIAL NUMBER	CUSTOMER	SHEET NUMBER
SEE CHART		3 OF 4

DOCUMENT STATUS	P1	RELEASE DATE	2019/02/08 03:26:20

FORMAT: master-lb-prod-A3
REVISION: H
DATE: 2018/01/18

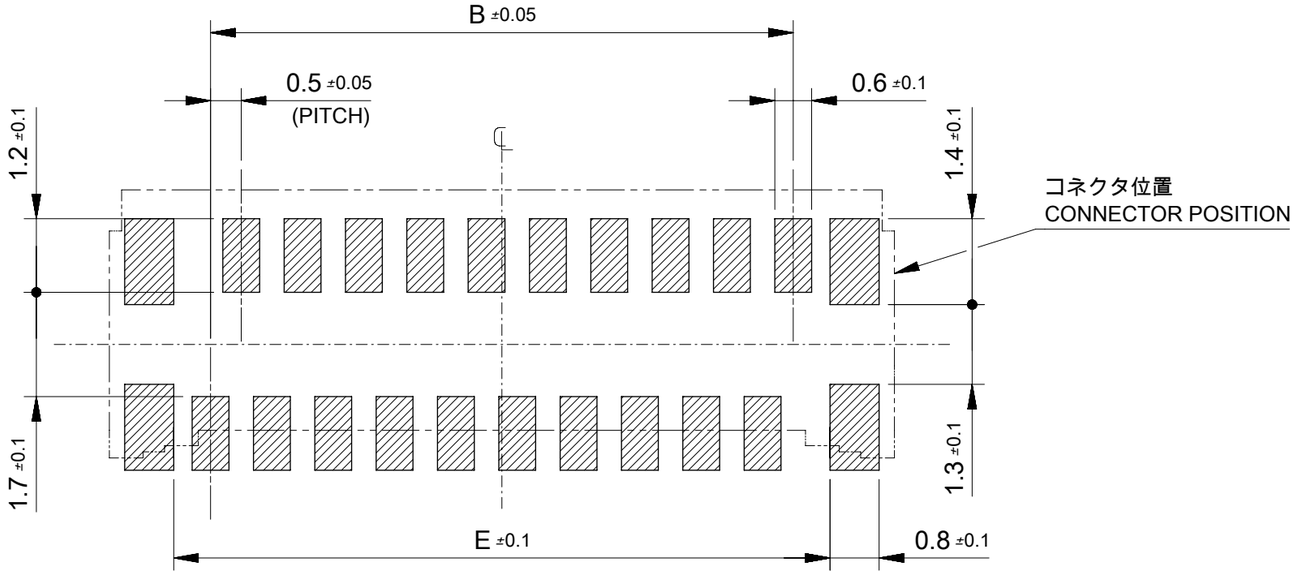

参考基板レイアウト
RECOMMENDED P.C.BOARD
PATTERN DIMENSION(REF.)

(マウント面)
(MOUNTING SIDE)

マスク厚　：100μm
マスク開口率：100%
SCREEN THICKNESS　：100μm
SCREEN OPEN RATIO　：100%

注記 NOTES:

1. 使用材料 MATERIAL
   ハウジング　：液晶ポリマー　ガラス充填, UL94V-0(白)
   HOUSING　LIQUID CRYSTAL POLYMER
   GLASS FILLED, UL94V-0 (WHITE)
   アクチュエータ　：ポリアミド, ガラス充填, UL94V-0(黒)
   ACTUATOR　POLYAMIDE, GLASS FILLED,
   UL94V-0 (BLACK)
   ターミナル　：りん青銅(t=0.15)
   TERMINAL　PHOSPHOR BRONZE
   金具　：りん青銅(t=0.2)
   FITTING NAIL　PHOSPHOR BRONZE

2. めっき仕様 PLATING
   ターミナル TERMINAL
   コンタクト部：部分金めっき(0.1μm以上)
   テール部：部分金めっき
   下地：ニッケルめっき(1.0μm以上)
   CONTACT AREA：SEPARATED GOLD PLATING
   (0.1 MICROMETER MINIMUM)
   SOLDER TAIL AREA：SEPARATED GOLD PLATING
   UNDERPLATE：NICKEL OVERALL
   金具 FITTING NAIL
   ニッケル下地錫めっき
   錫めっき(1.0μm以上)
   ニッケルめっき(1.0μm以上)
   TIN(Sn) OVER NICKEL(Ni) PLATING.
   TIN PLATING (1.0 MICROMETER MINIMUM)
   NICKEL PLATING (1.0 MICROMETER MINIMUM)

3. テールと金具を併せた平坦度は 0.1ミリメートル以下(リフロー前)
   TAILS AND NAILS COPLANARITY
   TO BE 0.1 MAX. (BEFORE REFLOW)

4 R0.3は、FPC導体部にかからないこと。
R0.3 MUST NOT BE OVERLAPPED TO PATTERN OF FPC.

FPC/FFCについて ABOUT FPC/FFC

打ち抜き方向は導体側から補強板側を推奨します。
導体部については軟箔銅35μmまたは50μmを推奨します。
FFCに規定された定格温度がFFC単体前提である場合が御座います。
コネクタと組み合わせての実使用において、接着層が劣化するなどの信頼性を満足できないケースを回避するため、
実機での評価/確認をお願い致します。
RECOMMENDED PUNCHING DIRECTION: FROM CONDUCTOR SIDE TO STIFFENER SIDE
RECOMMENDED CONDUCTOR SPEC: SOFT COPPER FOIL
RECOMMENDED CONDUCTOR THICKNESS: 35 MICROMETER OR 50 MICROMETER
NOTE: WHEN ACTUALLY USING IT WITH CONNECTOR, PLEASE DO THE EVALUATION AND THE
CONFIRMATION WITH AN ACTUAL EQUIPMENT TO EVADE THE CASE WHERE RELIABILITY
CANNOT BE FILLED (THE ADHESIVE LINE OF FFC IS DETERIORATED ETC,)

FPCについて　ABOUT FPC

補強フィルム材質はポリイミドを推奨します。ベースフィルムは25μmを推奨します。
接着剤は熱硬化接着剤を推奨します。
尚、接着剤の接点部への付着は導通不良の原因になりますので、染み出しが無い様お願い致します。
RECOMMENDED MATERIAL/THICKNESS.
RECOMMENDED STIFFENER MATERIAL: POLYIMIDE
RECOMMENDED BASE FILM THICKNESS: 25 MICROMETER
RECOMMENDED ADHESIVE: THERMOSETTING ADHESIVE
NOTE: PLEASE PUT APPROPRIATE AMOUNT OF ADHESIVE ON ADHEREND BECAUSE THERE IS A
POSSIBILITY THAT THE EXTRA ADHESIVE CAUSES THE DEFECT IN ELECTRICAL CONTINUITY.
THERE IS A POSSIBILITY THAT THE PRESCRIPT TEMPERATURE OF FFC IS SET TO SINGLE IT.

THIS DRAWING CONTAINS INFORMATION THAT IS PROPRIETARY TO MOLEX ELECTRONIC TECHNOLOGIES, LLC AND SHOULD NOT BE USED WITHOUT WRITTEN PERMISSION

DIMENSION UNITS	SCALE
mm	1:1

GENERAL TOLERANCES (UNLESS SPECIFIED)

ANGULAR TOL	±	1.0 °
4 PLACES	±	0.2
3 PLACES	±	0.2
2 PLACES	±	0.2
1 PLACE	±	0.2
0 PLACES	±	0.2

DRAFT WHERE APPLICABLE MUST REMAIN WITHIN DIMENSIONS

CURRENT REV DESC:

EC NO: 611684
DRWN: SKAWAKAMI 2019/02/07
CHK'D: TRSUZUKI 2019/02/07
APPR: RTAKEUCHI 2019/02/08

INITIAL REVISION:
DRWN: SKAWAKAMI 2018/11/26
APPR: RTAKEUCHI 2019/02/01

molex

0.5 FPC CONN. HSG ASSY
EASY ON VERTICAL (LOW-HALOGEN)

PRODUCT CUSTOMER DRAWING

DOCUMENT NUMBER	DOC TYPE	DOC PART	REVISION
5019511005-SD	PSD	000	B

THIRD ANGLE PROJECTION	DRAWING	SERIES	MATERIAL NUMBER	CUSTOMER	SHEET NUMBER
	A3-SIZE	501951	SEE CHART		4 OF 4

DOCUMENT STATUS	P1	RELEASE DATE	2019/02/08 03:26:20

FORMAT: master-tb-prod-A3
REVISION: H
DATE: 2018/01/18