MATERIAL NO.	ENGINEERING NO.
2297790036	MXAEC-2.5C-TRPI

ENGINERING NUMBER LEGEND

MXAEC-2.5C-TRPI-□□

COLOR:
BLANK: GRAY (STANDARD COLOR)
BL: BLUE (CONTACT MOLEX MARKETING)
RD: RED (CONTACT MOLEX MARKETING)
BK: BLACK (CONTACT MOLEX MARKETING)

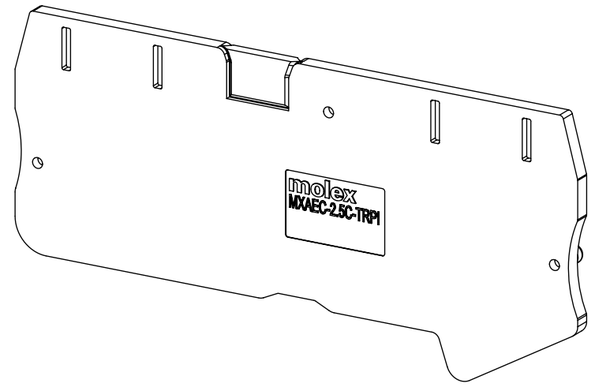

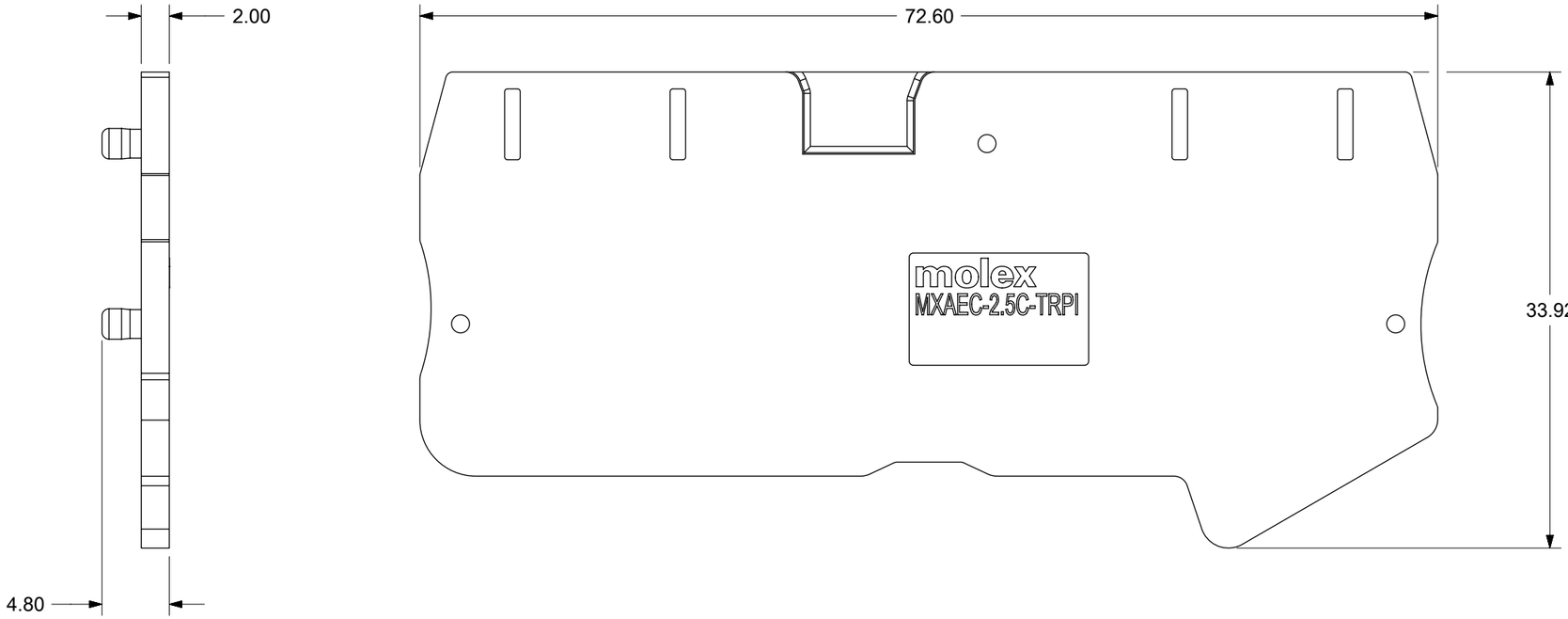

NOTES:

1. RoHS COMPLIANT
2. PACKAGING SPECIFICATION: 2306820001

TOTAL PITCH TOLERANCES IN MM									NOMINAL DIMENSION TOLERANCES IN MM								
0 to 30	31 to 53	54 to 70	71 to 90	91 to 115	116 to 150	151 to 200	201 to 250	251 to 320	0 to 30	31 to 53	54 to 70	71 to 90	91 to 115	116 to 150	151 to 200	201 to 250	251 to 320
±0.20	±0.25	±0.30	±0.35	±0.44	±0.55	±0.70	±0.85	±1.00	±0.25	±0.30	±0.35	±0.44	±0.55	±0.70	±0.85	±1.00	±1.20

DOCUMENT STATUS	P1	RELEASE DATE	2025/08/13 18:06:46

ITEM	DESCRIPTION	MATERIAL	FINISH
1	END COVER	PA66 UL94-V0	GRAY

THIS DRAWING CONTAINS INFORMATION THAT IS PROPRIETARY TO MOLEX ELECTRONIC TECHNOLOGIES, LLC AND SHOULD NOT BE USED WITHOUT WRITTEN PERMISSION

FUNCTIONAL SYMBOLS: FA = 0, FC = 0, FD = 0
DIVISIONAL SYMBOLS

DIMENSION UNITS	SCALE
mm	2.5:1

GENERAL TOLERANCES (UNLESS SPECIFIED)

ANGULAR TOL	±	---
4 PLACES	±	---
3 PLACES	±	---
2 PLACES	±	---
1 PLACE	±	---
0 PLACES	±	---

DRAFT WHERE APPLICABLE MUST REMAIN WITHIN DIMENSIONS

CURRENT REV DESC: NEW RELEASE

EC NO: 831060
DRWN: ABENJAMINLW 2025/08/06
CHK'D: DACHAMMER 2025/08/11
APPR: DMUELLER 2025/08/13

INITIAL REVISION:
DRWN: ABENJAMINLW 2025/08/06
APPR: DMUELLER 2025/08/13

THIRD ANGLE PROJECTION | DRAWING: B-SIZE | SERIES: 229779 | MATERIAL NUMBER: SEE TABLE | CUSTOMER:

molex

END COVER

PRODUCT CUSTOMER DRAWING

DOCUMENT NUMBER	DOC TYPE	DOC PART	REVISION
2297790036	PSD	000	A

SHEET NUMBER: 1 OF 1

FORMAT: master-tb-prod-B
REVISION: J1
DATE: 2021/05/01