MATERIAL NO.	ENGINEERING NO.
2297780142	MXAEB-SS5N-SCPI

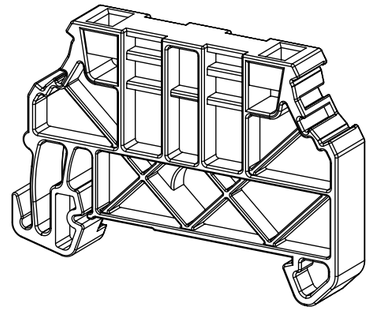

ENGINERING NUMBER LEGEND

MXAEB-SS5N-SCPI-□□

COLOR:

BLANK: GRAY (STANDARD COLOR)

BL: BLUE (CONTACT MOLEX MARKETING)

RD: RED (CONTACT MOLEX MARKETING)

BK: BLACK (CONTACT MOLEX MARKETING)

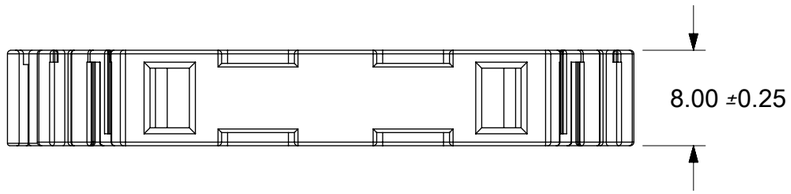

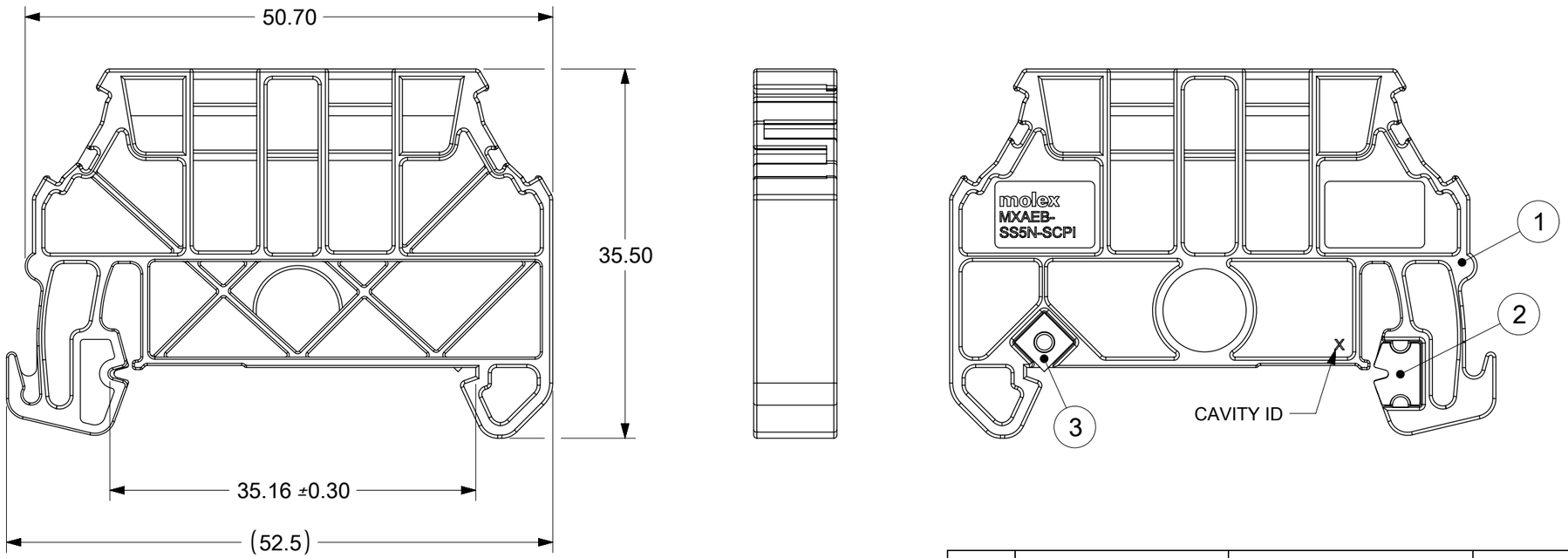

NOTES:

1. RoHS COMPLIANT
2. USING TEMPERATURE RANGE: -40°C TO +120°C
3. MOUNTING TYPE: TH 35 - 7.5
   TH 35 - 15
4. PACKAGING SPECIFICATION: 2306820001

TOTAL PITCH TOLERANCES IN MM									NOMINAL DIMENSION TOLERANCES IN MM								
0 to 30	31 to 53	54 to 70	71 to 90	91 to 115	116 to 150	151 to 200	201 to 250	251 to 320	0 to 30	31 to 53	54 to 70	71 to 90	91 to 115	116 to 150	151 to 200	201 to 250	251 to 320
±0.20	±0.25	±0.30	±0.35	±0.44	±0.55	±0.70	±0.85	±1.00	±0.25	±0.30	±0.35	±0.44	±0.55	±0.70	±0.85	±1.00	±1.20

DOCUMENT STATUS	P1	RELEASE DATE	2025/11/04 23:47:37

ITEM	DESCRIPTION	MATERIAL	FINISH
3	CLAMP	STAINLESS STEEL	
2	CLAMP	STAINLESS STEEL	
1	HOUSING	PA66 UL94-V0	GRAY

FUNCTIONAL SYMBOLS
FA = 0
FC = 0
FD = 0

DIVISIONAL SYMBOLS

THIS DRAWING CONTAINS INFORMATION THAT IS PROPRIETARY TO MOLEX ELECTRONIC TECHNOLOGIES, LLC AND SHOULD NOT BE USED WITHOUT WRITTEN PERMISSION

DIMENSION UNITS	SCALE
mm	2:1

GENERAL TOLERANCES (UNLESS SPECIFIED)

ANGULAR TOL	±	---
4 PLACES	±	---
3 PLACES	±	---
2 PLACES	±	---
1 PLACE	±	---
0 PLACES	±	---

DRAFT WHERE APPLICABLE MUST REMAIN WITHIN DIMENSIONS

CURRENT REV DESC: NEW RELEASE

EC NO: 837488

DRWN:	MARUTD	2025/10/10
CHK'D:	DACHAMMER	2025/10/16
APPR:	DMUELLER	2025/11/04

INITIAL REVISION:

DRWN:	MARUTD	2025/10/10
APPR:	DMUELLER	2025/11/04

THIRD ANGLE PROJECTION

molex

END BRACKET

PRODUCT CUSTOMER DRAWING

DOCUMENT NUMBER	DOC TYPE	DOC PART	REVISION
2297780142	PSD	000	A

DRAWING	SERIES	MATERIAL NUMBER	CUSTOMER	SHEET NUMBER
B-SIZE	229778	SEE TABLE		1 OF 1

FORMAT: master-B-size
REVISION: J1
DATE: 2021/05/01