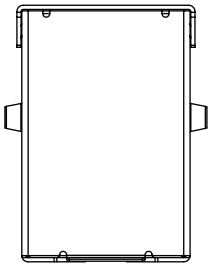

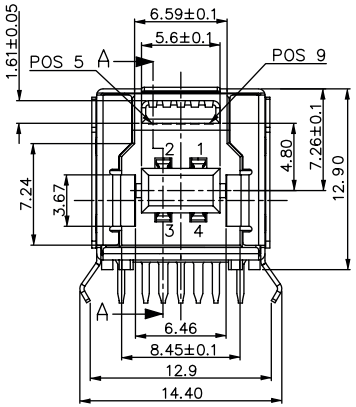

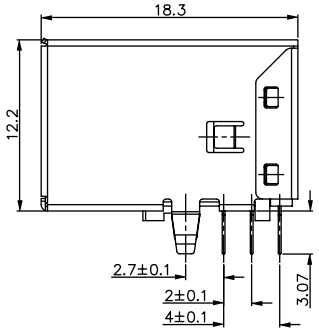

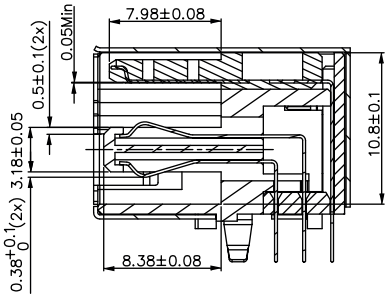

SECTION A - A

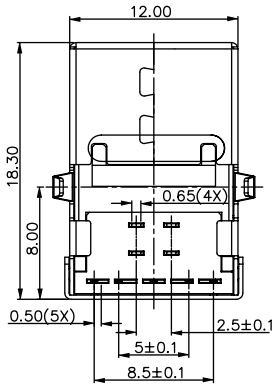

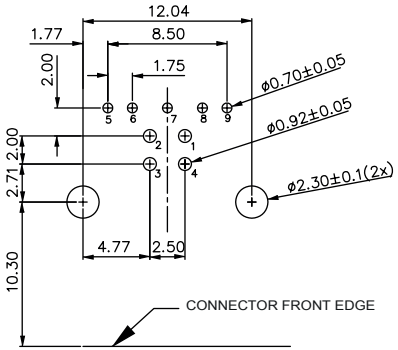

PCB LAYOUT - COMPONENT VIEW

Pin NUMBER	SIGNAL NAME
1	VBUS
2	D−
3	D+
4	GND
5	StdB_SSTX−
6	StdB_SSTX+
7	GND_DRAIN
8	StdB_SSRX−
9	StdB_SSRX+
Shell	Shield

TECHNICAL CHARACTERISTICS

MATERIAL
INSULATOR: LCP
FLAMABILITY RATING: UL94-V0
COLOR: BLUE
CONTACT MATERIAL: PHOSPHORE BRONZE
CONTACT TYPE: STAMPED
CONTACT PLATING: UNDERPLATE 1.27 to 2.54 µm Ni
CONTACT AREA 0.76 µm Gold
SOLDER TAIL AREA 2.54 to 5.08 µm Matt Tin
SHIELDING: BRASS Ni PLATED

ENVIRONMENTAL
OPERATING TEMPERATURE: -20 up to +85°C
COMPLIANCE: RoHS & LEAD FREE AS PER DIRECTIVE 2002/95/EC
HALOGEN FREE COMPLIANT AS PER IEC 61249-2-21

ELECTRICAL
CURRENT RATING:
- PIN 1 & PIN 4 (Vbus & corresponding ground PIN) 1.8A Max
- OTHER PINS 0.25 A min
WORKING VOLTAGE: 30Vac
DIELECTRIC WITHSTANDING VOLTAGE: 100Vac/min
INSULATION RESISTANCE: > 100MΩ
CONTACT RESISTANCE:
- PIN 1 & PIN 4: 30mΩ Max
- OTHER PINS: 50mΩ Max
IMPEDANCE: 90Ω +/- 15Ω @ 50ps RISE TIME (20~80%)

MECHANICAL
INSERTION FORCE: 35.0N Max
EXTRACTION FORCE: 10.0N min
QUALITY CLASS: 5000 MATING CYCLES

SOLDERING
WAVE SOLDERING ONLY AS PER JEDEC J-STD-020D

PACKAGING
TRAY

RoHS Compliant

REV	DATE	FILE	BY
G			
F			
E			
D			
C			
B			
A	30-SEP-10	PDF	JP

PROJECTION:

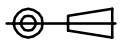

GENERAL TOLERANCE
.X = +/- 0.2
.XX = +/- 0.15

APPROVAL: RJ

UNIT: MM
SCALE:
SHEET: 1/1
DRAW: JOE

WÜRTH ELEKTRONIK

DESCRIPTION: USB 3.0 HORIZONTAL TYPE B

WERI PART NO: 692 221 030 100

SIZE **A4**