KEITHLEY

Model 2000 Multimeter

User's Manual

A GREATER MEASURE OF CONFIDENCE

WARRANTY

Keithley Instruments, Inc. warrants this product to be free from defects in material and workmanship for a period of 3 years from date of shipment.

Keithley Instruments, Inc. warrants the following items for 90 days from the date of shipment: probes, cables, rechargeable batteries, diskettes, and documentation.

During the warranty period, we will, at our option, either repair or replace any product that proves to be defective.

To exercise this warranty, write or call your local Keithley representative, or contact Keithley headquarters in Cleveland, Ohio. You will be given prompt assistance and return instructions. Send the product, transportation prepaid, to the indicated service facility. Repairs will be made and the product returned, transportation prepaid. Repaired or replaced products are warranted for the balance of the original warranty period, or at least 90 days.

LIMITATION OF WARRANTY

This warranty does not apply to defects resulting from product modification without Keithley's express written consent, or misuse of any product or part. This warranty also does not apply to fuses, software, non-rechargeable batteries, damage from battery leakage, or problems arising from normal wear or failure to follow instructions.

THIS WARRANTY IS IN LIEU OF ALL OTHER WARRANTIES, EXPRESSED OR IMPLIED, INCLUDING ANY IMPLIED WARRANTY OF MERCHANTABILITY OR FITNESS FOR A PARTICULAR USE. THE REMEDIES PROVIDED HEREIN ARE BUYER'S SOLE AND EXCLUSIVE REMEDIES.

NEITHER KEITHLEY INSTRUMENTS, INC. NOR ANY OF ITS EMPLOYEES SHALL BE LIABLE FOR ANY DIRECT, INDIRECT, SPECIAL, INCIDENTAL OR CONSEQUENTIAL DAMAGES ARISING OUT OF THE USE OF ITS INSTRUMENTS AND SOFTWARE EVEN IF KEITHLEY INSTRUMENTS, INC., HAS BEEN ADVISED IN ADVANCE OF THE POSSIBILITY OF SUCH DAMAGES. SUCH EXCLUDED DAMAGES SHALL INCLUDE, BUT ARE NOT LIMITED TO: COSTS OF REMOVAL AND INSTALLATION, LOSSES SUSTAINED AS THE RESULT OF INJURY TO ANY PERSON, OR DAMAGE TO PROPERTY.

KEITHLEY

Keithley Instruments, Inc.		28775 Aurora Road • Cleveland, Ohio 44139 • 440-248-0400 • Fax: 440-248-6168 **1-888-KEITHLEY (534-8453) • www.keithley.com**
Sales Offices:	BELGIUM:	Bergensesteenweg 709 • B-1600 Sint-Pieters-Leeuw • 02-363 00 40 • Fax: 02/363 00 64
	CHINA:	Yuan Chen Xin Building, Room 705 • 12 Yumin Road, Dewai, Madian • Beijing 100029 • 8610-6202-2886 • Fax: 8610-6202-2892
	FINLAND:	Tietäjäntie 2 • 02130 Espoo • Phone: 09-54 75 08 10 • Fax: 09-25 10 51 00
	FRANCE:	3, allée des Garays • 91127 Palaiseau Cédex • 01-64 53 20 20 • Fax: 01-60 11 77 26
	GERMANY:	Landsberger Strasse 65 • 82110 Germering • 089/84 93 07-40 • Fax: 089/84 93 07-34
	GREAT BRITAIN:	Unit 2 Commerce Park, Brunel Road • Theale • Berkshire RG7 4AB • 0118 929 7500 • Fax: 0118 929 7519
	INDIA:	Flat 2B, Willocrissa • 14, Rest House Crescent • Bangalore 560 001 • 91-80-509-1320/21 • Fax: 91-80-509-1322
	ITALY:	Viale San Gimignano, 38 • 20146 Milano • 02-48 39 16 01 • Fax: 02-48 30 22 74
	KOREA:	FL., URI Building • 2-14 Yangjae-Dong • Seocho-Gu, Seoul 137-130 • 82-2-574-7778 • Fax: 82-2-574-7838
	NETHERLANDS:	Postbus 559 • 4200 AN Gorinchem • 0183-635333 • Fax: 0183-630821
	SWEDEN:	c/o Regus Business Centre • Frosundaviks Allé 15, 4tr • 169 70 Solna • 08-509 04 679 • Fax: 08-655 26 10
	SWITZERLAND:	Kriesbachstrasse 4 • 8600 Dübendorf • 01-821 94 44 • Fax: 01-820 30 81
	TAIWAN:	1FL., 85 Po Ai Street • Hsinchu, Taiwan, R.O.C. • 886-3-572-9077• Fax: 886-3-572-9031

© Copyright 2001 Keithley Instruments, Inc.
Printed in the U.S.A.

11/01

Model 2000 Multimeter
User's Manual

©1994, Keithley Instruments, Inc.
All rights reserved.
Cleveland, Ohio, U.S.A.
Seventh Printing, December 2001
Document Number: 2000-900-01 Rev. G

Manual Print History

The print history shown below lists the printing dates of all Revisions and Addenda created for this manual. The Revision Level letter increases alphabetically as the manual undergoes subsequent updates. Addenda, which are released between Revisions, contain important change information that the user should incorporate immediately into the manual. Addenda are numbered sequentially. When a new Revision is created, all Addenda associated with the previous Revision of the manual are incorporated into the new Revision of the manual. Each new Revision includes a revised copy of this print history page.

Revision A (Document Number 2000-900-01) ..... November 1994
Revision B (Document Number 2000-900-01) ..... February 1995
Revision C (Document Number 2000-900-01) ..... March 1995
Addendum C (Document Number 2000-900-02) ..... April 1995
Revision D (Document Number 2000-900-01) ..... August 1995
Addendum D (Document Number 2000-900-02) ..... October 1995
Addendum D (Document Number 2000-900-03) ..... September 1996
Revision E (Document Number 2000-900-01) ..... March 1997
Revision F (Document Number 2000-900-01) ..... April 1999
Revision G (Document Number 2000-900-01) ..... December 2001

All Keithley product names are trademarks or registered trademarks of Keithley Instruments, Inc.
Other brand names are trademarks or registered trademarks of their respective holders.

KEITHLEY

Safety Precautions

The following safety precautions should be observed before using this product and any associated instrumentation. Although some instruments and accessories would normally be used with non-hazardous voltages, there are situations where hazardous conditions may be present.

This product is intended for use by qualified personnel who recognize shock hazards and are familiar with the safety precautions required to avoid possible injury. Read and follow all installation, operation, and maintenance information carefully before using the product. Refer to the manual for complete product specifications.

If the product is used in a manner not specified, the protection provided by the product may be impaired.

The types of product users are:

Responsible body is the individual or group responsible for the use and maintenance of equipment, for ensuring that the equipment is operated within its specifications and operating limits, and for ensuring that operators are adequately trained.

Operators use the product for its intended function. They must be trained in electrical safety procedures and proper use of the instrument. They must be protected from electric shock and contact with hazardous live circuits.

Maintenance personnel perform routine procedures on the product to keep it operating properly, for example, setting the line voltage or replacing consumable materials. Maintenance procedures are described in the manual. The procedures explicitly state if the operator may perform them. Otherwise, they should be performed only by service personnel.

Service personnel are trained to work on live circuits, and perform safe installations and repairs of products. Only properly trained service personnel may perform installation and service procedures.

Keithley products are designed for use with electrical signals that are rated Installation Category I and Installation Category II, as described in the International Electrotechnical Commission (IEC) Standard IEC 60664. Most measurement, control, and data I/O signals are Installation Category I and must not be directly connected to mains voltage or to voltage sources with high transient over-voltages. Installation Category II connections require protection for high transient over-voltages often associated with local AC mains connections. Assume all measurement, control, and data I/O connections are for connection to Category I sources unless otherwise marked or described in the Manual.

Exercise extreme caution when a shock hazard is present. Lethal voltage may be present on cable connector jacks or test fixtures. The American National Standards Institute (ANSI) states that a shock hazard exists when voltage levels greater than 30V RMS, 42.4V peak, or 60VDC are present. **A good safety practice is to expect that hazardous voltage is present in any unknown circuit before measuring.**

Operators of this product must be protected from electric shock at all times. The responsible body must ensure that operators are prevented access and/or insulated from every connection point. In some cases, connections must be exposed to potential human contact. Product operators in these circumstances must be trained to protect themselves from the risk of electric shock. If the circuit is capable of operating at or above 1000 volts, **no conductive part of the circuit may be exposed.**

Do not connect switching cards directly to unlimited power circuits. They are intended to be used with impedance limited sources. NEVER connect switching cards directly to AC mains. When connecting sources to switching cards, install protective devices to limit fault current and voltage to the card.

Before operating an instrument, make sure the line cord is connected to a properly grounded power receptacle. Inspect the connecting cables, test leads, and jumpers for possible wear, cracks, or breaks before each use.

When installing equipment where access to the main power cord is restricted, such as rack mounting, a separate main input power disconnect device must be provided, in close proximity to the equipment and within easy reach of the operator.

For maximum safety, do not touch the product, test cables, or any other instruments while power is applied to the circuit under test. ALWAYS remove power from the entire test system and discharge any capacitors before: connecting or disconnecting cables or jumpers, installing or removing switching cards, or making internal changes, such as installing or removing jumpers.

Do not touch any object that could provide a current path to the common side of the circuit under test or power line (earth) ground. Always make measurements with dry hands while standing on a dry, insulated surface capable of withstanding the voltage being measured.

The instrument and accessories must be used in accordance with its specifications and operating instructions or the safety of the equipment may be impaired.

Do not exceed the maximum signal levels of the instruments and accessories, as defined in the specifications and operating information, and as shown on the instrument or test fixture panels, or switching card.

When fuses are used in a product, replace with same type and rating for continued protection against fire hazard.

Chassis connections must only be used as shield connections for measuring circuits, NOT as safety earth ground connections.

If you are using a test fixture, keep the lid closed while power is applied to the device under test. Safe operation requires the use of a lid interlock.

If a ⏚ screw is present, connect it to safety earth ground using the wire recommended in the user documentation.

The ⚠ symbol on an instrument indicates that the user should refer to the operating instructions located in the manual.

The ⚡ symbol on an instrument shows that it can source or measure 1000 volts or more, including the combined effect of normal and common mode voltages. Use standard safety precautions to avoid personal contact with these voltages.

The **WARNING** heading in a manual explains dangers that might result in personal injury or death. Always read the associated information very carefully before performing the indicated procedure.

The **CAUTION** heading in a manual explains hazards that could damage the instrument. Such damage may invalidate the warranty.

Instrumentation and accessories shall not be connected to humans.

Before performing any maintenance, disconnect the line cord and all test cables.

To maintain protection from electric shock and fire, replacement components in mains circuits, including the power transformer, test leads, and input jacks, must be purchased from Keithley Instruments. Standard fuses, with applicable national safety approvals, may be used if the rating and type are the same. Other components that are not safety related may be purchased from other suppliers as long as they are equivalent to the original component. (Note that selected parts should be purchased only through Keithley Instruments to maintain accuracy and functionality of the product.) If you are unsure about the applicability of a replacement component, call a Keithley Instruments office for information.

To clean an instrument, use a damp cloth or mild, water based cleaner. Clean the exterior of the instrument only. Do not apply cleaner directly to the instrument or allow liquids to enter or spill on the instrument. Products that consist of a circuit board with no case or chassis (e.g., data acquisition board for installation into a computer) should never require cleaning if handled according to instructions. If the board becomes contaminated and operation is affected, the board should be returned to the factory for proper cleaning/servicing.

Table of Contents

1 General Information

Introduction....1-2
Feature overview....1-2
Warranty information....1-3
Manual addenda....1-3
Safety symbols and terms....1-3
Specifications....1-3
Inspections....1-4
Options and accessories....1-5

2 Basic Measurements

Introduction....2-2
Front panel summary....2-3
Rear panel summary....2-6
Power-up....2-8
Display....2-17
Measuring voltage....2-18
Measuring current....2-22
Measuring resistance....2-24
Measuring frequency and period....2-26
Measuring temperature....2-28
Math....2-30
Measuring continuity....2-34
Testing diodes....2-35

3 Measurement Options

Introduction....3-2
Measurement configuration....3-3
Trigger operations....3-8
Buffer operations....3-17
Limit operations....3-20
Scan operations....3-22
System operations....3-32

4 Remote Operation

Introduction....4-2
Selecting a language....4-4
RS-232 operation....4-6
GPIB bus operation and reference....4-9
Status structure....4-19

Trigger model (GPIB operation) 4-29
Programming syntax 4-32
Common commands 4-39

5 SCPI Command Reference

SCPI Signal oriented measurement commands 5-3
SCPI command subsystems reference tables 5-7
Calculate subsystem 5-20
DISPlay subsystem 5-26
:FORMat subsystem 5-28
ROUTe subsystem 5-32
[SENSe[1]] subsystem 5-37
STATus subsystem 5-52
:SYSTem subsystem 5-61
:TRACe subsystem 5-68
Trigger subsystem 5-70
:UNIT subsystem 5-74

A Specifications

Accuracy calculations A-7
Optimizing measurement accuracy A-10
Optimizing measurement speed A-11

B Status and Error Messages

C Example Programs

Program examples C-2

D Models 196/199 and 8840A/8842A Commands

E IEEE-488 Bus Overview

Introduction E-2
Bus description E-4
Bus lines E-6
Bus commands E-8
Interface function codes E-15

F IEEE-488 and SCPI Conformance Information

Introduction F-2

List of Illustrations

2 Basic Measurements

Model 2000 front panel 2-3
Model 2000 rear panel 2-6
Power module 2-8
DC and AC voltage measurements 2-19
DC and AC current measurements.....2-22
Two- and four-wire resistance measurements.....2-25
Frequency and period measurements.....2-27
Thermocouple temperature measurements 2-28
Continuity measurements 2-34
Diode testing.....2-35

3 Measurement Options

Moving average and repeating filters.....3-4
Front panel triggering without stepping/scanning 3-8
Rear panel pinout.....3-11
Trigger link input pulse specifications (EXT TRIG) 3-12
Trigger link output pulse specifications (VMC) 3-12
DUT test system 3-13
Trigger link connections 3-13
Operation model for triggering example 3-14
DIN to BNC trigger cable.....3-16
Buffer locations.....3-18
Using limit test to sort 100Ω, 10% resistors.....3-21
Front panel triggering with stepping.....3-24
Front panel triggering with scanning.....3-25
Internal scanning example with reading count option 3-27
Internal scanning example with timer and delay options 3-29
External scanning example with Model 7001 3-31

4 Remote Operation

RS-232 interface connector 4-8
IEEE-488 connector.....4-10
IEEE-488 connections 4-10
IEEE-488 connector location.....4-11
Model 2000 status register structure.....4-19
Standard event status 4-22
Operation event status.....4-22
Measurement event status.....4-23
Questionable event status.....4-23
Status byte and Service Request (SRQ).....4-25
Trigger model (GPIB operation).....4-29

Device action (trigger model) 4-31
Standard event enable register 4-41
Standard event status register 4-43
Service request enable register 4-49
Status byte register 4-51

5 SCPI Command Reference

ASCII data format 5-28
IEEE754 single precision data format (32 data bits) 5-29
IEEE754 double precision data format (64 data bits) 5-29
Measurement event register 5-53
Questionable event register 5-54
Operation event register 5-55
Measurement event enable register 5-57
Questionable event enable register 5-57
Operation event enable register 5-57
Key-press codes 5-66

E IEEE-488 Bus Overview

IEEE-488 bus configuration E-5
IEEE-488 handshake sequence E-7
Command codes E-12

List of Tables

2 Basic Measurements

Fuse ratings 2-9
Factory defaults 2-13
Crest factor limitations 2-18

3 Measurement Options

Rate settings for the measurement functions 3-7
Auto delay settings 3-9
Bus commands parameters for stepping and scanning counters 3-28

4 Remote Operation

Language supported 4-4
RS-232 connector pinout 4-8
General bus commands and associated statements 4-14
IEEE-488.2 common commands and queries 4-39

5 SCPI Command Reference

Signal oriented measurement command summary 5-3
CALCulate command summary 5-8
DISPlay command summary 5-9
FORMat command summary 5-9
ROUTe command summary 5-10
SENSe command summary 5-10
STATus command summary 5-16
SYSTem command summary 5-17
TRACe command summary 5-17
Trigger command summary 5-18
UNIT command summary 5-19

B Status and Error Messages

Status and error messages B-2

D Models 196/199 and 8840A/8842A Commands

Models 196/199 device-dependent command summary D-2
Models 8840A/8842A device-dependent command Summary D-6

E IEEE-488 Bus Overview

IEEE-488 bus command summary E-8
Hexadecimal and decimal command codes E-11
Typical addressed command sequence E-13
Typical addressed command sequence E-13
IEEE command groups E-14
Model 2000 interface function codes E-15

F IEEE-488 and SCPI Conformance Information

IEEE-488 documentation requirements F-2
Coupled commands F-4

1
General Information

Introduction

This section contains general information about the Model 2000 Multimeter. The information is organized as follows:

- Feature overview
- Warranty information
- Manual addenda
- Safety symbols and terms
- Specifications
- Inspection
- Options and accessories

If you have any questions after reviewing this information, please contact your local Keithley representative or call one of our Applications Engineers at 1-800-348-3735 (U.S. and Canada only). Worldwide phone numbers are listed at the front of this manual.

Feature overview

The Model 2000 is a 6½-digit high-performance digital multimeter. It has 0.002% 90-day basic DC voltage accuracy and 0.008% 90-day basic resistance accuracy. At 6½ digits, the multimeter delivers 50 triggered readings/sec over the IEEE-488 bus. At 4½ digits, it can read up to 2000 readings/sec into its internal buffer. The Model 2000 has broad measurement ranges:

- DC voltage from 0.1µV to 1000V.
- AC (RMS) voltage from 0.1µV to 750V, 1000V peak.
- DC current from 10nA to 3A.
- AC (RMS) current from 1µA to 3A.
- Two and four-wire resistance from 100µΩ to 120MΩ.
- Frequency from 3Hz to 500kHz.
- Thermocouple temperature from -200°C to +1372°C.

Some additional capabilities of the Model 2000 include:

- Full range of functions — In addition to those listed above, the Model 2000 functions include period, dB, dBm, continuity, diode testing, mX+b, and percent.
- Optional scanning — For internal scanning, options include the Model 2000-SCAN, a 10-channel, general-purpose card, and the Model 2001-TCSCAN, a 9-channel, thermocouple card with a built-in cold junction. For external scanning, the Model 2000 is compatible with Keithley's Model 7001 and 7002 switch matrices and cards.
- Programming languages and remote interfaces — The Model 2000 offers three programming language choices (SCPI, Keithley Models 196/199, and Fluke 8840A/8842A) and two remote interface ports (IEEE-488/GPIB and RS-232C).
- Reading and setup storage — Up to 1024 readings and two setups (user and factory defaults) can be stored and recalled.
- Closed-cover calibration — The instrument can be calibrated either from the front panel or remote interface.

Warranty information

Warranty information is located at the front of this instruction manual. Should your Model 2000 require warranty service, contact the Keithley representative or authorized repair facility in your area for further information. When returning the instrument for repair, be sure to fill out and include the service form at the back of this manual to provide the repair facility with the necessary information.

Manual addenda

Any improvements or changes concerning the instrument or manual will be explained in an addendum included with the manual. Be sure to note these changes and incorporate them into the manual.

Safety symbols and terms

The following symbols and terms may be found on the instrument or used in this manual.

The ⚠ symbol on the instrument indicates that the user should refer to the operating instructions located in the manual.

The ⚠ symbol on the instrument shows that high voltage may be present on the terminal(s). Use standard safety precautions to avoid personal contact with these voltages.

The **WARNING** heading used in this manual explains dangers that might result in personal injury or death. Always read the associated information very carefully before performing the indicated procedure.

The **CAUTION** heading used in this manual explains hazards that could damage the instrument. Such damage may invalidate the warranty.

Specifications

Full Model 2000 specifications are included in Appendix A.

Inspection

The Model 2000 was carefully inspected electrically and mechanically before shipment. After unpacking all items from the shipping carton, check for any obvious signs of physical damage that may have occurred during transit. (Note: There may be a protective film over the display lens, which can be removed.) Report any damage to the shipping agent immediately. Save the original packing carton for possible future reshipment. The following items are included with every Model 2000 order:

- Model 2000 Multimeter with line cord.
- Safety test leads (Model 1751).
- Accessories as ordered.
- Certificate of calibration.
- Model 2000 User's Manual (P/N 2000-900-00).
- Model 2000 Calibration Manual (P/N 2000-905-00).
- Model 2000 Support Software Disk including TestPoint run-time applications, TestPoint instrument libraries for GPIB and RS-232, and QuickBASIC examples.

If an additional manual is required, order the appropriate manual package. The manual packages include a manual and any pertinent addenda.

Options and accessories

The following options and accessories are available from Keithley for use with the Model 2000.

Scanner cards

Model 2000-SCAN: This is a 10-channel scanner card that installs in the option slot of the Model 2000. Channels can be configured for 2-pole or 4-pole operation. Included are two pairs of leads for connection to Model 2000 rear panel inputs (Keithley P/N CA-109).

Model 2001-TCSCAN: This is a thermocouple scanner card that installs in the option slot of the Model 2000. The card has nine analog input channels that can be used for high-accuracy, high-speed scanning. A built-in temperature reference allows multi-channel, cold-junction compensated temperature measurements using thermocouples.

General purpose probes

Model 1754 Universal Test Lead Kit: Consists of one set of test leads (0.9m), two spade lugs, two banana plugs, two hooks, and two alligator clips.

Model 8605 High Performance Modular Test Leads: Consists of two high voltage (1000V) test probes and leads. The test leads are terminated with a banana plug with retractable sheath on each end.

Model 8606 High Performance Probe Tip Kit: Consists of two spade lugs, two alligator clips, and two spring hook test probes. (The spade lugs and alligator clips are rated at 30V RMS, 42.4V peak; the test probes are rated at 1000V.) These components are for use with high performance test leads terminated with banana plugs, such as the Model 8605.

The following test leads and probes are rated at 30V RMS, 42.4V peak:

Models 5805 and 5805-12 Kelvin Probes: Consists of two spring-loaded Kelvin test probes with banana plug termination. Designed for instruments that measure 4-terminal resistance. The Model 5805 is 0.9m long; the Model 5805-12 is 3.6m long.

Model 5806 Kelvin Clip Lead Set: Includes two Kelvin clip test leads (0.9m) with banana plug termination. Designed for instruments that measure 4-terminal resistance. A set of eight replacement rubber bands is available as Keithley P/N GA-22.

Model 8604 SMD Probe Set: Consists of two test leads (0.9m), each terminated with a surface mount device “grabber” clip on one end and a banana plug with a retractable sheath on the other end.

Low thermal probes

Model 8610 Low Thermal Shorting Plug: Consists of four banana plugs mounted to a 1-inch square circuit board, interconnected to provide a short circuit among all plugs.

Model 8611 Low Thermal Patch Leads: Consists of two test leads (0.9m), each with a banana plug with a retractable sheath at each end. These leads minimize the thermally-induced offsets that can be created by test leads.

Model 8612 Low Thermal Spade Leads: Consists of two test leads (0.9m), each terminated with a spade lug on one end and a banana plug with a retractable sheath on the other end. These leads minimize the thermally-induced offsets that can be created by test leads.

Cables and adapters

Models 7007-1 and 7007-2 Shielded GPIB Cables: Connect the Model 2000 to the GPIB bus using shielded cables and connectors to reduce electromagnetic interference (EMI). The Model 7007-1 is 1m long; the Model 7007-2 is 2m long.

Models 8501-1 and 8501-2 Trigger Link Cables: Connect the Model 2000 to other instruments with Trigger Link connectors (e.g., Model 7001 Switch System). The Model 8501-1 is 1m long; the Model 8501-2 is 2m long.

Model 8502 Trigger Link Adapter: Allows you to connect any of the six Trigger Link lines of the Model 2000 to instruments that use the standard BNC trigger connectors.

Model 8504 DIN to BNC Trigger Cable: Allows you to connect Trigger Link lines one (Voltmeter Complete) and two (External Trigger) of the Model 2000 to instruments that use BNC trigger connectors. The Model 8504 is 1m long.

Rack mount kits

Model 4288-1 Single Fixed Rack Mount Kit: Mounts a single Model 2000 in a standard 19-inch rack.

Model 4288-2 Side-by-Side Rack Mount Kit: Mounts two instruments (Models 182, 428, 486, 487, 2000, 2001, 2002, 6517, 7001) side-by-side in a standard 19-inch rack.

Model 4288-3 Side-by-Side Rack Mount Kit: Mounts a Model 2000 and a Model 199 side-by-side in a standard 19-inch rack.

Model 4288-4 Side-by-Side Rack Mount Kit: Mounts a Model 2000 and a 5.25-inch instrument (Models 195A, 196, 220, 224, 230, 263, 595, 614, 617, 705, 740, 775, etc.) side-by-side in a standard 19-inch rack.

Carrying case

Model 1050 Padded Carrying Case: A carrying case for a Model 2000. Includes handles and shoulder strap.

2
Basic Measurements

Introduction

This section summarizes front panel operation of the Model 2000. It is organized as follows:

- **Front panel summary —** Includes an illustration and summarizes keys, display, and connections.
- **Rear panel summary —** Includes an illustration and summarizes connections.
- **Power-up —** Describes connecting the instrument to line power, the power-up sequence, the warm-up time, and default conditions.
- **Display —** Discusses the display format and messages that may appear while using the instrument.
- **Measuring voltage —** Covers DC and AC voltage measurement connections and low level voltage considerations.
- **Measuring current —** Covers DC and AC current measurement connections and current fuse replacement.
- **Measuring resistance —** Details two and four-wire measurement connections and shielding considerations.
- **Measuring frequency and period —** Covers frequency and period measurement connections.
- **Measuring temperature —** Describes the use of thermocouples for temperature measurements.
- **Math —** Covers the mX+b, percent, dBm, and dB math functions performed on single readings.
- **Measuring continuity —** Explains setting up and measuring continuity of a circuit.
- **Testing diodes —** Describes testing general-purpose and zener diodes.

Front panel summary

The front panel of the Model 2000 is shown in Figure 2-1. This figure includes important abbreviated information that should be reviewed before operating the instrument.

Figure 2-1
Model 2000 front panel

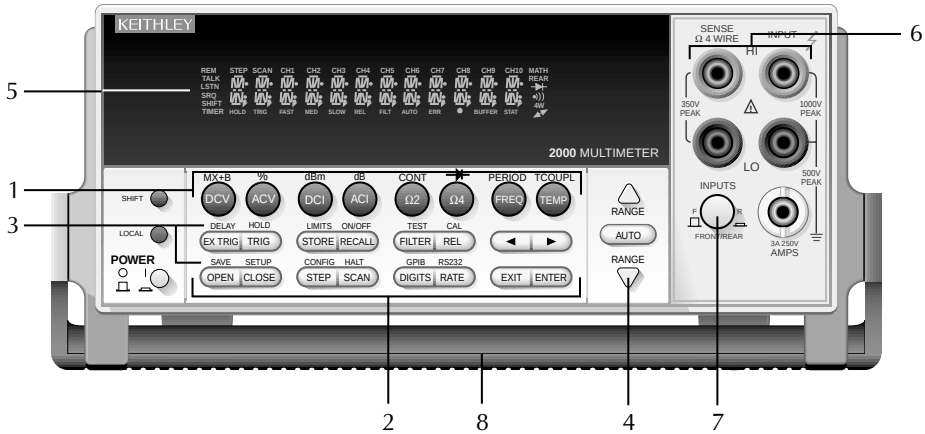

1 Function keys (shifted and unshifted)

Select measurement function (DC and AC voltage, DC and AC current, 2-wire and 4-wire resistance, frequency, period, temperature with thermocouples), math function (mX+b, %, dBm, dB), or special function (continuity, diode test).

2 Operation keys

EXTRIG	Selects external triggers (front panel, bus, trigger link) as the trigger source.
TRIG	Triggers a measurement from the front panel.
STORE	Enables reading storage.
RECALL	Displays stored readings and buffer statistics (maximum, minimum, average, standard deviation). Use ▲ and ▼ to scroll through buffer; use ◀ and ▶ to toggle between reading number and reading.
FILTER	Displays digital filter status for present function and toggles filter on/off.
REL	Enables/disables relative reading on present function.
◀ and ▶	Moves through selections within functions and operations. If scanner card installed, manually scans channels.
OPEN	Opens all channels on internal scanner card; stops scanning.
CLOSE	Closes selected internal channel.
STEP	Steps through channels; sends a trigger after each channel.
SCAN	Scans through channels; sends a trigger after last channel.
DIGITS	Changes number of digits of resolution.
RATE	Changes reading rate: fast, medium, slow.
EXIT	Cancels selection, moves back to measurement display.
ENTER	Accepts selection, moves to next choice or back to measurement display.
SHIFT	Used to access shifted keys.
LOCAL	Cancels GPIB remote mode.

3 Shifted operation keys

DELAY	Sets user delay between trigger and measurement.
HOLD	Holds reading when the selected number of samples is within the selected tolerance.
LIMITS	Sets upper and lower limit values for readings.
ON/OFF	Enables/disables limits; selects beeper operation for limit testing.
TEST	Selects built-in tests, diagnostics, display test.
CAL	Accesses calibration.
SAVE	Saves present configuration for power-on user default.
SETUP	Restores factory or user default configuration.
CONFIG	Selects minimum/maximum channels, timer, and reading count for step/scan.
HALT	Turns off step/scan.
GPIB	Enables/disables GPIB interface; selects address and language.
RS232	Enables/disables RS-232 interface; selects baud rate, flow control, terminator.

4 Range keys

▲	Moves to higher range; increments digit; moves to next selection.
▼	Moves to lower range; decrements digit; moves to previous selection.
AUTO	Enables/disables autorange.

5 Annunciators

*(asterisk)	Reading being stored.
→|| (diode)	Instrument is in diode testing function.
))) (speaker)	Beeper on for continuity or limits testing.
↕ (more)	Indicates additional selections are available.
4W	4-wire resistance reading displayed.
AUTO	Autoranging enabled.
BUFFER	Recalling stored readings.
CH 1-10	Displayed internal channel is closed.
ERR	Questionable reading; invalid cal step.
FAST	Fast reading rate.
FILT	Digital filter enabled.
HOLD	Instrument is in hold mode.
LSTN	Instrument addressed to listen over GPIB.
MATH	Math function (mX+b, %, dB, dBm) enabled.
MED	Medium reading rate.
REAR	Reading acquired from rear inputs.
REL	Relative reading displayed.
REM	Instrument is in GPIB remote mode.
SCAN	Instrument is in scan mode.
SHIFT	Accessing shifted keys.
SLOW	Slow reading rate.
SRQ	Service request over GPIB.
STAT	Displaying buffer statistics.
STEP	Instrument is in step mode.
TALK	Instrument addressed to talk over GPIB.
TIMER	Timed scans in use.
TRIG	Indicates external trigger (front panel, bus, trigger link) selected.

6 Input connections

INPUT HI and LO	Used for making DC volts, AC volts, 2-wire resistance measurements.
AMPS	Used in conjunction with INPUT LO to make DC current and AC current measurements. Also holds current input fuse (3A, 250V, fast blow, 5×20mm).
SENSE Ω4 WIRE HI and LO	Used with INPUT HI and LO to make 4-wire resistance measurements.

7 INPUTS

Selects input connections on front or rear panel.

8 Handle

Pull out and rotate to desired position.

Rear panel summary

The rear panel of the Model 2000 is shown in Figure 2-2. This figure includes important abbreviated information that should be reviewed before operating the instrument.

Figure 2-2
Model 2000 rear panel

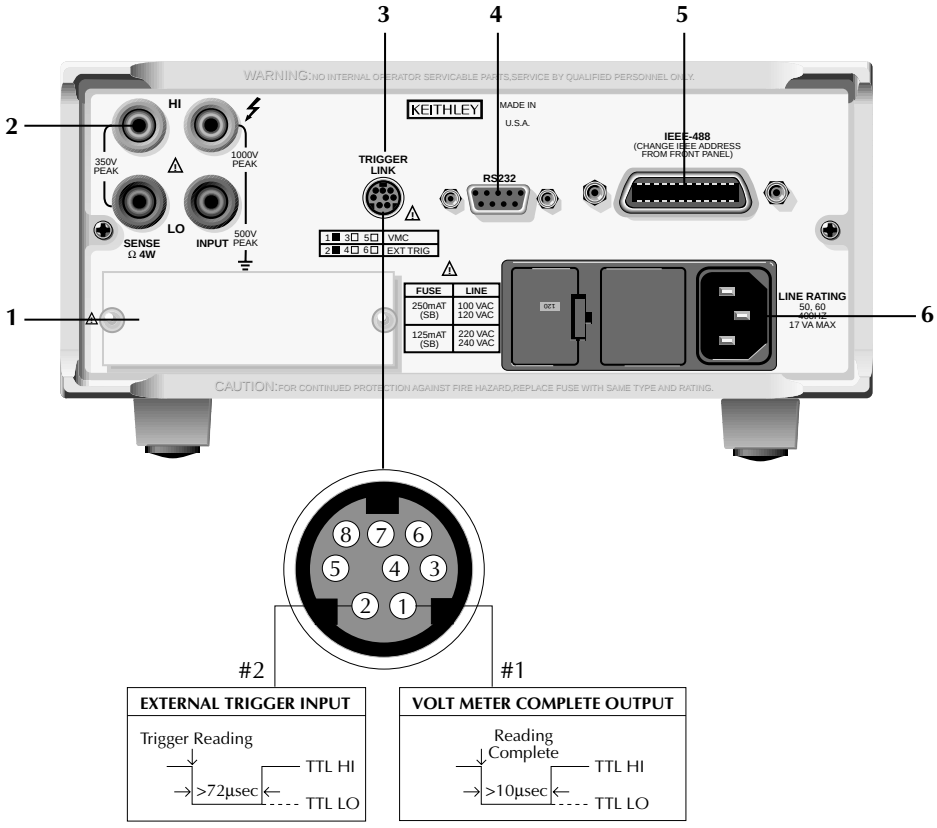

1 Option slot

An optional scanner card (Model 2000-SCAN, 2001-SCAN, or 2001-TCSCAN) installs in this slot.

2 Input connections

INPUT HI and LO	Used for making DC volts, AC volts, 2-wire resistance measurements and for connecting scanner card.
SENSE Ω4 WIRE HI and LO	Used with INPUT HI and LO to make 4-wire resistance measurements and also for connecting scanner card.

3 TRIGGER LINK

One 8-pin micro-DIN connector for sending and receiving trigger pulses among other instruments. Use a trigger link cable or adapter, such as Models 8501-1, 8501-2, 8502, 8504.

4 RS-232

Connector for RS-232 operation. Use a straight-through (not null modem) DB-9 cable.

5 IEEE-488

Connector for IEEE-488 (GPIB) operation. Use a shielded cable, such as Models 7007-1 and 7007-2.

6 Power module

Contains the AC line receptacle, power line fuse, and line voltage setting. The Model 2000 can be configured for line voltages of 100V/120V/220V/240VAC at line frequencies of 45Hz to 66Hz or 360Hz to 440Hz.

Power-up

Line power connection

Follow the procedure below to connect the Model 2000 to line power and turn on the instrument.

1. Check to see that the line voltage selected on the rear panel (see Figure 2-3) is correct for the operating voltage in your area. If not, refer to the next procedure, “Setting line voltage and replacing fuse.”

CAUTION ***Operating the instrument on an incorrect line voltage may cause damage to the instrument, possibly voiding the warranty.***

2. Before plugging in the power cord, make sure that the front panel power switch is in the off (0) position.
3. Connect the female end of the supplied power cord to the AC receptacle on the rear panel. Connect the other end of the power cord to a grounded AC outlet.

WARNING ***The power cord supplied with the Model 2000 contains a separate ground wire for use with grounded outlets. When proper connections are made, instrument chassis is connected to power line ground through the ground wire in the power cord. Failure to use a grounded outlet may result in personal injury or death due to electric shock.***

4. Turn on the instrument by pressing the front panel power switch to the on (1) position.

Figure 2-3
Power module

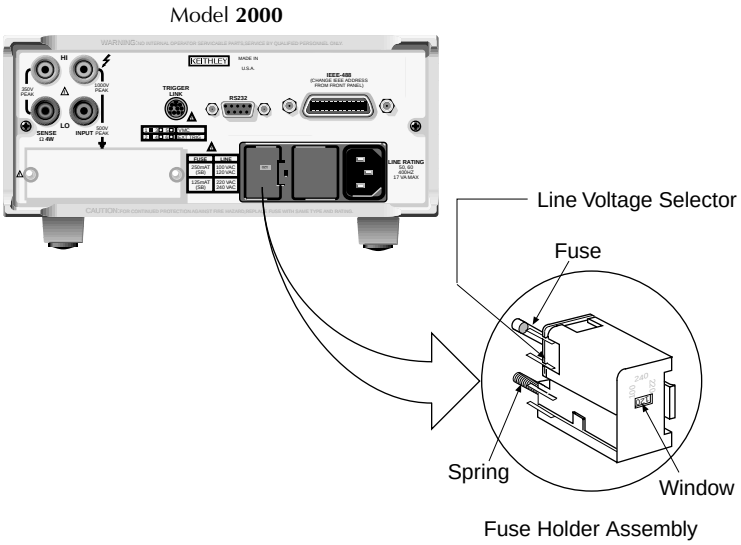

Setting line voltage and replacing fuse

A rear panel fuse located next to the AC receptacle protects the power line input of the instrument. If the line voltage setting needs to be changed or the line fuse needs to be replaced, perform the following steps.

WARNING ***Make sure the instrument is disconnected from the AC line and other equipment before changing the line voltage setting or replacing the line fuse.***

1. Place the tip of a flat-blade screwdriver into the power module by the fuse holder assembly (see Figure 2-3). Gently push in and to the left. Release pressure on the assembly and its internal spring will push it out of the power module.
2. Remove the fuse and replace it with the type listed in Table 2-1.

CAUTION ***For continued protection against fire or instrument damage, only replace fuse with the type and rating listed. If the instrument repeatedly blows fuses, locate and correct the cause of the trouble before replacing the fuse. See the optional Model 2000 Repair Manual for troubleshooting information.***

3. If configuring the instrument for a different line voltage, remove the line voltage selector from the assembly and rotate it to the proper position. When the selector is installed into the fuse holder assembly, the correct line voltage appears inverted in the window.
4. Install the fuse holder assembly into the power module by pushing it in until it locks in place.

Table 2-1
Fuse ratings

Line voltage	Fuse rating	Keithley P/N
100/120V	0.25A slow-blow 5×20mm	FU-96-4
220/240V	0.125A slow-blow 5×20mm	FU-91

Power-up sequence

On power-up, the Model 2000 performs self-tests on its EPROM and RAM and momentarily lights all segments and annunciators. If a failure is detected, the instrument momentarily displays an error message and the ERR annunciator turns on. (Error messages are listed in Appendix B.)

NOTE *If a problem develops while the instrument is under warranty, return it to Keithley Instruments, Inc., for repair.*

If the instrument passes the self-tests, the firmware revision levels are displayed. An example of this display is:

REV: A01 A02

where: A01 is the main board ROM revision.
A02 is the display board ROM revision.

After the power-up sequence, the instrument begins its normal display of readings.

High energy circuit safety precautions

To optimize safety when measuring voltage in high energy distribution circuits, read and use the directions in the following warning.

WARNING ***Dangerous arcs of an explosive nature in a high energy circuit can cause severe personal injury or death. If the multimeter is connected to a high energy circuit when set to a current range, low resistance range, or any other low impedance range, the circuit is virtually shorted. Dangerous arcing can result even when the multimeter is set to a voltage range if the minimum voltage spacing is reduced in the external connections.***

When making measurements in high energy circuits, use test leads that meet the following requirements:

- Test leads should be fully insulated.
- Only use test leads that can be connected to the circuit (e.g., alligator clips, spade lugs, etc.) for hands-off measurements.
- Do not use test leads that decrease voltage spacing. These diminishes arc protection and create a hazardous condition.

Use the following sequence when testing power circuits:

1. De-energize the circuit using the regular installed connect-disconnect device, such as a circuit breaker, main switch, etc.
2. Attach the test leads to the circuit under test. Use appropriate safety rated test leads for this application.
3. Set the multimeter to the proper function and range.
4. Energize the circuit using the installed connect-disconnect device and make measurements without disconnecting the multimeter.
5. De-energize the circuit using the installed connect-disconnect device.
6. Disconnect the test leads from the circuit under test.

WARNING ***The maximum common-mode voltage (voltage between INPUT LO and the chassis ground) is 500V peak. Exceeding this value may cause a breakdown in insulation, creating a shock hazard.***

Power-on defaults

Power-on defaults are the settings the instrument assumes when it is turned on. The Model 2000 offers two choices for the settings: factory and user. The power-on default will be the last configuration you saved. The SAVE and SETUP keys select the two choices of power-on defaults.

To save present configuration as user settings:

1. Configure the instrument as desired for USER default.
2. Press SHIFT then SAVE.
3. Use the ▲ and ▼ keys to select YES or NO.
4. Press ENTER.

To restore factory or user settings:

1. Press SHIFT then SETUP.
2. Use the ▲ and ▼ keys to select FACTory or USER.
3. Press ENTER.

Since the basic measurement procedures in this manual assume the factory defaults, reset the instrument to the factory settings when following step-by-step procedures. Table 2-2 lists the factory default settings.

Table 2-2
Factory defaults

Setting	Factory default
Autozero	On
Buffer	No effect
Continuity	
Beeper	On
Digits	4½
Rate	Fast (0.1 PLC)
Threshold	10Ω
Current (AC and DC)	
Digits (AC)	5½
Digits (DC)	6½
Filter	On
Count	10
Mode	Moving average
Range	Auto
Relative	Off
Value	0.0
Rate (AC)	Medium*
Rate (DC)	Medium (1 PLC)
Diode test	
Digits	6½
Range	1mA
Rate	Medium (1 PLC)
Frequency and Period	
Digits	6½
Range	10V
Relative	Off
Value	0.0
Rate	Slow (1 sec)
Function	DCV
GPIB	No effect
Address	(16 at factory)
Language	(SCPI at factory)
Limits	Off
Beeper	Never
High limit	+1
Low limit	-1
mX+b	Off
Scale factor	1.0
Offset	0.0
Percent	Off
References	1.0

Table 2-2 (cont.)
Factory defaults

Setting	**Factory default**
Resistance (2-wire and 4-wire)	
Digits	6½
Filter	On
Count	10
Mode	Moving average
Range	Auto
Relative	Off
Value	0.0
Rate	Medium (1 PLC)
RS-232	Off
Baud	No effect
Flow	No effect
Tx term	No effect
Scanning	Off
Channels	1-10
Mode	Internal
Temperature	
Digits	5½
Filter	On
Count	10
Mode	Moving average
Junction	Simulated
Temperature	23°C
Relative	Off
Value	0.0
Rate	Medium (1 PLC)
Thermocouple	J
Units	°C
Triggers	
Continuous	On
Delay	Auto
Source	Immediate

Table 2-2 (cont.)
Factory defaults

Setting	**Factory default**
Voltage (AC and DC)	
dB reference	No effect
dBm reference	75Ω
Digits (AC)	5½
Digits (DC)	6½
Filter	On
Count	10
Mode	Moving average
Range	Auto
Relative	Off
Value	0.0
Rate (AC)	Medium*
Rate (DC)	Medium (1 PLC)

*DETector:BANDwidth 30

GPIB primary address

The GPIB primary address of the instrument must be the same as the primary address you specify in the controller's programming language. The default primary address of the instrument is 16, but you can set the address to any value from 0 to 30 by using the following step by step instructions.

1. Press SHIFT then GPIB.
2. Use the ▲ and ▼ keys to select ADDRess. Or, press ENTER. Once you have pressed ENTER, the unit automatically displays the address selection.
3. Use the ◀ and ▶ keys to toggle from ADDRess to the numeric entry. Notice the values are blinking.
4. Use the ▲ and ▼ keys to change the numeric entries to the desired address.
5. Press ENTER.

See Section Four — Remote Operation for more GPIB information.

Warm-up time

The Model 2000 is ready for use as soon as the power-up sequence has completed. However, to achieve rated accuracy, allow the instrument to warm up for one hour. If the instrument has been subjected to extreme temperatures, allow additional time for internal temperatures to stabilize.

Display

The display of the Model 2000 is primarily used to display readings, along with the units and type of measurement. Annunciators are located on the top, bottom, right, and left of the reading or message display. The annunciators indicate various states of operation. See Figure 2-1 for a complete listing of annunciators.

Status and error messages

Status and error messages are displayed momentarily. During Model 2000 operation and programming, you will encounter a number of front panel messages. Typical messages are either of status or error variety, as listed in Appendix B.

Measuring voltage

The Model 2000 can make DCV measurements from 0.1µV to 1000V and ACV measurements from 0.1µV to 750V RMS, 1000V peak.

Connections

Assuming factory default conditions, the basic procedure is as follows:

1. Connect test leads to the INPUT HI and LO terminals. Either the front or rear inputs can be used; place the INPUTS button in the appropriate position.
2. Select the measurement function by pressing DCV or ACV.
3. Pressing AUTO toggles autoranging. Notice the AUTO annunciator is displayed with autoranging. If you want manual ranging, use the RANGE ▲ and ▼ keys to select a measurement range consistent with the expected voltage.
4. Connect test leads to the source as shown in Figure 2-4.

CAUTION ***Do not apply more than 1000V peak to the input or instrument damage may occur. The voltage limit is subject to the 8×10^7 V•Hz product.***

5. Observe the display. If the “OVERFLOW” message is displayed, select a higher range until an o normal reading is displayed (or press AUTO for autoranging). Use the lowest possible range for the best resolution.
6. Take readings from the display.

Crest factor

AC voltage and current accuracies are affected by the crest factor of the waveform, the ratio of the peak value to the RMS value. Table 2-3 lists the fundamental frequencies at which the corresponding crest factor must be taken into account for accuracy calculations.

Table 2-3
Crest factor limitations

Crest factor	Fundamental frequency
2	50kHz
3	3kHz
4-5	1kHz

Figure 2-4
DC and AC voltage measurements

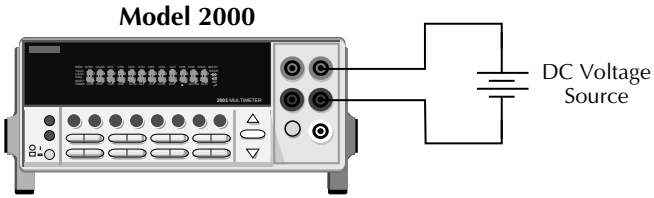

Input Resistance = 10MΩ on 1000V and 100V ranges ;
> 10GΩ on 10V, 1V and 100mV ranges.

Caution : Maximum Input = 1010V peak

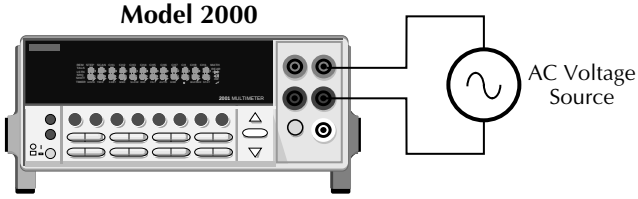

Input Impedence = 1MΩ and 100pF

Caution: Maximum Input = 750V RMS, 1000V peak, 8 x 10^7 V•Hz

Low level considerations

For sensitive measurements, external considerations beyond the Model 2000 affect the accuracy. Effects not noticeable when working with higher voltages are significant in microvolt signals. The Model 2000 reads only the signal received at its input; therefore, it is important that this signal be properly transmitted from the source. The following paragraphs indicate factors that affect accuracy, including stray signal pick-up and thermal offsets.

Shielding

AC voltages that are extremely large compared with the DC signal to be measured may produce an erroneous output. Therefore, to minimize AC interference, the circuit should be shielded with the shield connected to the Model 2000 INPUT LO (particularly for low level sources). Improper shielding can cause the Model 2000 to behave in one or more of the following ways:

- Unexpected offset voltages.
- Inconsistent readings between ranges.
- Sudden shifts in reading.

To minimize pick-up, keep the voltage source and the Model 2000 away from strong AC magnetic sources. The voltage induced due to magnetic flux is proportional to the area of the loop formed by the input leads. Therefore, minimize the loop area of the input leads and connect each signal at only one point.

NOTE *Shielded cables should be used for input circuits to avoid interference caused by conducting RF.*

Thermal EMFs

Thermal EMFs (thermoelectric potentials) are generated by thermal differences between the junctions of dissimilar metals. These can be large compared to the signal that the Model 2000 can measure. Thermal EMFs can cause the following conditions:

- Instability or zero offset is much higher than expected.
- The reading is sensitive to (and responds to) temperature changes. This effect can be demonstrated by touching the circuit, by placing a heat source near the circuit, or by a regular pattern of instability (corresponding to changes in sunlight or the activation of heating and air conditioning systems).

To minimize the drift caused by thermal EMFs, use copper leads to connect the circuit to the Model 2000. A banana plug generates a few microvolts. A clean copper conductor such as #10 bus wire is ideal for this application. The leads to the input may be shielded or unshielded, as necessary. Refer to “Shielding”.

Widely varying temperatures within the circuit can also create thermal EMFs. Therefore, maintain constant temperatures to minimize these thermal EMFs. A shielded enclosure around the circuit under test also helps by minimizing air currents.

The REL control can be used to null out constant offset voltages.

NOTE *Additional thermals may be generated by the optional scanner cards.*

AC voltage offset

The Model 2000, at 5½ digits resolution, will typically display 100 counts of offset on AC volts with the input shorted. This offset is caused by the offset of the TRMS converter. This offset will not affect reading accuracy and should not be zeroed out using the REL feature. The following equation expresses how this offset (V_{OFFSET}) is added to the signal input (V_{IN}):

$$\text{Displayed reading} = \sqrt{(V_{IN})^2 + (V_{OFFSET})^2}$$

Example: Range = 1VAC
Offset = 100 counts (1.0mV)
Input = 100mV RMS

$$\text{Displayed reading} = \sqrt{(100\text{mV})^2 + (1.0\text{mV})^2}$$

$$= \sqrt{(0.01\text{V}) + (1 \times 10^{-6}\text{V})}$$

$$\text{Displayed reading} = 0.100005$$

The offset is seen as the last digit, which is not displayed. Therefore, the offset is negligible. If the REL feature were used to zero the display, the 100 counts of offset would be subtracted from V_{IN}, resulting in an error of 100 counts in the displayed reading.

See Section 3 — Measurement Options for information that explain the configuration options for DC and AC voltage measurements.

Measuring current

The Model 2000 can make DCI measurements from 10nA to 3A and ACI measurements from 1µAm to 3A RMS.

NOTE *See the previous discussion about crest factor in "Measuring voltage" in this section.*

Connections

Assuming factory default conditions, the basic procedure is as follows:

1. Connect test leads to the AMPS and INPUT LO terminals. The front inputs must be used; place the INPUTS button in the FRONT position.
2. Select the measurement function by pressing DCI or ACI.
3. Pressing AUTO toggles autoranging. Notice the AUTO annunciator is displayed with autoranging. If you want manual ranging, use the RANGE ▲ and ▼ keys to select a measurement range consistent with the expected current.
4. Connect test leads to the source as shown in Figure 2-5.

CAUTION ***Do not apply more than 3A, 250V to the input or the AMPS fuse will open-circuit.***

5. Observe the display. If the "OVERFLOW" message is displayed, select a higher range until a normal reading is displayed (or press AUTO for autoranging). Use the lowest possible range for the best resolution.
6. Take readings from the display.

Figure 2-5
DC and AC current measurements

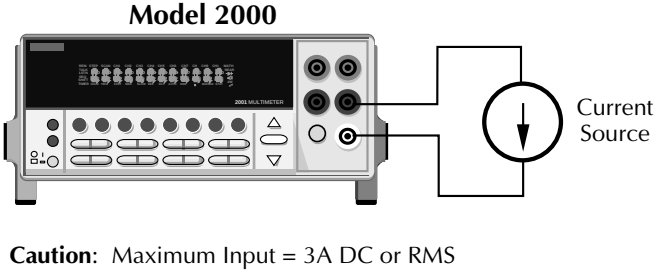

AMPS fuse replacement

WARNING ***Make sure the instrument is disconnected from the power line and other equipment before replacing the AMPS fuse.***

1. Turn off the power and disconnect the power line and test leads.
2. From the front panel, gently push in the AMPS jack with your thumb and rotate the fuse carrier one-quarter turn counter-clockwise. Release pressure on the jack and its internal spring will push the jack out of the socket.
3. Remove the fuse and replace it with the same type (3A, 250V, fast blow, 5 × 20mm). The Keithley part number is FU-99-1.

CAUTION ***Do not use a fuse with a higher current rating than specified or instrument damage may occur. If the instrument repeatedly blows fuses, locate and correct the cause of the trouble before replacing the fuse. See the optional Model 2000 Repair Manual for troubleshooting information.***

4. Install the new fuse by reversing the procedure above.

See Section 3 — Measurement Options for information that explains the configuration options for DC and AC current measurements.

Measuring resistance

The Model 2000 can make 2-wire and 4-wire resistance measurements from 100µΩ to 120MΩ.

Connections

Assuming factory default conditions, the basic procedure is as follows:

1. Connect test leads to the Model 2000 as follows:
   A. For Ω2-wire, connect the test leads to INPUT HI and LO.
   B. For Ω4-wire, connect the test leads to INPUT HI and LO, and SENSE Ω4 WIRE HI and LO. Recommended Kelvin test probes include the Keithley Models 5805 and 5806. Either the front or rear inputs can be used; place the INPUTS button in the appropriate position.
2. Select the measurement function by pressing Ω2 or Ω4.
3. Pressing AUTO toggles autoranging. Notice the AUTO annunciator is displayed with autoranging. If you want manual ranging, use the RANGE ▲ and ▼ keys to select a measurement range consistent with the expected resistance.
4. Connect test leads to the resistance as shown in Figure 2-6.

CAUTION ***Do not apply more than 1000V peak between INPUT HI and LO or instrument damage may occur.***

5. Observe the display. If the “OVERFLOW” message is displayed, select a higher range until a normal reading is displayed. Use the lowest possible range for the best resolution.
6. Take a reading from the display.

Figure 2-6
Two- and four-wire resistance measurements

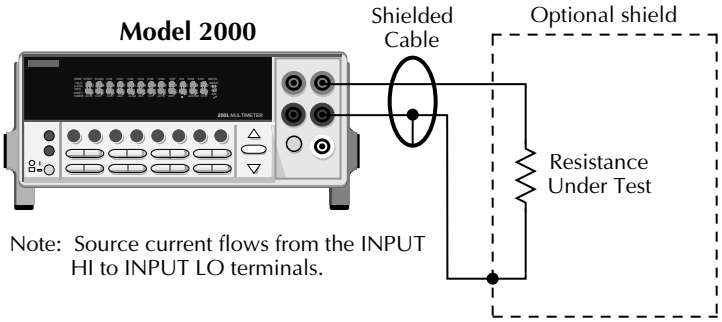

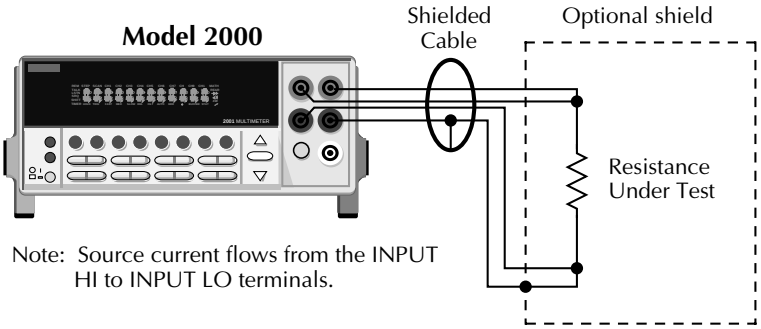

Shielding

To achieve a stable reading, it helps to shield resistances greater than 100kΩ. Place the resistance in a shielded enclosure and connect the shield to the INPUT LO terminal of the instrument electrically.

See Section 3—Measurement Options for information that explains the configuration options for 2-wire and 4-wire resistance measurements.

Measuring frequency and period

The Model 2000 can make frequency measurements from 3Hz to 500kHz on voltage ranges of 100mV, 1V, 10V, 100V, and 750V. Period measurements can be taken from 2µs to 333ms on the same voltage ranges as the frequency.

The instrument uses the volts input terminals to measure frequency. The AC voltage range can be changed with the RANGE ▲ and ▼ keys. The signal voltage must be greater than 10% of the full-scale range.

CAUTION ***The voltage limit is subject to the 8×10^7 V•Hz product.***

Trigger level

Frequency and Period use a zero-crossing trigger, meaning that a count is taken when the frequency crosses the zero level. The Model 2000 uses a reciprocal counting technique to measure frequency and period. This method generates constant measurement resolution for any input frequency. The multimeter's AC voltage measurement section performs input signal conditioning.

Gate time

The gate time is the amount of time the Model 2000 uses to sample frequency or period readings. All settings of the RATE key (FAST, MEDium, SLOW) yield a gate time of one second.

The Model 2000 completes a reading when it receives its first zero-crossing after the gate time expires. In other words, the reading is completed 1/2 cycle after the gate time has expired. For example, with a 1sec gate time to sample a 3Hz frequency, you may wait up to 3 seconds before the Model 2000 returns a reading.

Connections

Assuming factory default conditions, the basic procedure is as follows:

1. Connect test leads to the INPUT HI and LO terminals of the Model 2000. Either the front or rear inputs can be used; place the INPUTS button in the appropriate position.
2. Select the FREQ or PERIOD function.
3. Connect test leads to the source as shown in Figure 2-7.

CAUTION ***Do not exceed 1000V peak between INPUT HI and INPUT LO or instrument damage may occur.***

4. Take a reading from the display.

See Section 3—Measurement Options for information that explains the configuration options for frequency and period measurements.

Figure 2-7
Frequency and period measurements

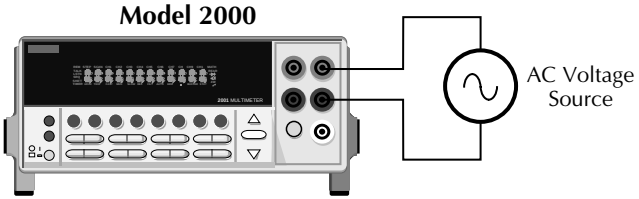

Input Impedance = 1MΩ in parallel with <100pF

Caution: Maximum Input = 1000V peak, 8 x 10^7 V•Hz

Measuring temperature

The Model 2000 measures temperature with thermocouples. The temperature measurement ranges available depend on the type of thermocouple chosen.

Thermocouples can be connected to the Model 2001-TCSCAN card, which plugs into the option slot of the Model 2000, or to an external thermocouple card, such as a Model 7057A, 7402, or 7014 installed in a Model 7001 or 7002 Switch System.

Connections

Figure 2-8
Thermocouple temperature measurements

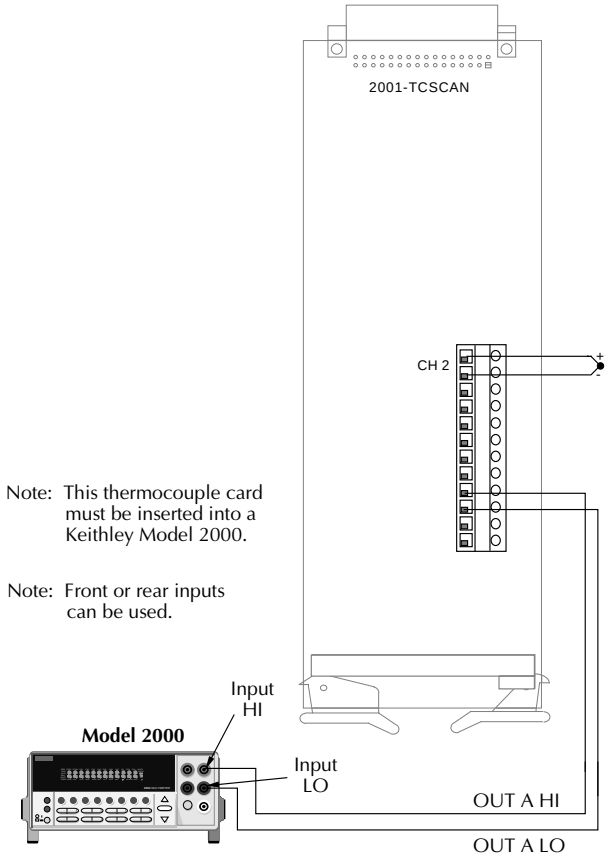

Configuration

The following information explains the various configuration options for temperature mea surements. To select and configure the thermocouple measurement:

Press SHIFT then TCOUPL. Three choices are available using the ▲ and ▼ keys:

- UNITS — C, K, F (Centigrade, Kelvin, Fahrenheit). This parameter selects the displayed units for temperature measurements.
- TYPE — J, K, T (thermocouple type).
- JUNC — SIM, CH1 (simulated or referenced at Channel 1). Typically, a thermocouple card uses a single reference junction. The Model 2000 can simulate a reference junction temperature or use the reference junction on a switching card. Typical reference junction temperatures are 0°C and 23°C.

A simulated reference temperature is the temperature of the junction where the thermocouple voltage is sensed. It is room temperature if the thermocouple wire is terminated to banana jacks and corrected directly to the multimeter. The accuracy of a temperature measurement depends on the accuracy of the reference junction.

Math

Model 2000 math operations are divided into four categories:

- mX+b and percent
- dBm and dB calculations
- Statistics of buffered readings
- Limit testing

The first two categories are discussed here; buffered reading statistics and reading limit testing are described in Section 3 — Measurement Options.

The procedure to select and configure a math operation is summarized as follows:

1. Press SHIFT then the appropriate math key.
2. Configure the parameters for the math operation. Press ENTER when done. (Press SHIFT then the related math function to end the calculation.)

NOTES *Once enabled for a function, the mX+b and percentage calculations are in effect across function changes.*

The Model 2000 uses IEEE-754 floating point format for math calculations.

MX + B

This math operation lets you manipulate normal display readings (X) mathematically according to the following calculation:

$$Y = mX + b$$

where: X is the normal display reading
m and b are user-entered constants for scale factor and offset
Y is the displayed result

Configuration

To configure the mX+b calculation, perform the following steps:

1. Press SHIFT then MX+B to display the present scale factor:

   M: +1.000000 ^

2. Enter a value and units prefix. Use the ◀ and ▶ keys to choose a numerical place and use the ▲ and ▼ keys to increment or decrement the digits.
3. Press ENTER to confirm the M value and display the B value:

   B: +00.00000 m

4. Enter a value and units prefix.
5. Press ENTER to confirm the B value and display the UNITS designation:

   MXB

6. Scroll through the letters to change and press ENTER when done.

The Model 2000 then displays the result of the calculation.

Percent

This item selects the percentage calculation and lets you specify a reference value. The displayed reading will be expressed as a percent deviation from the reference value. The percentage calculation is performed as follows:

$$\text{Percent} = \frac{\text{Input - Reference}}{\text{Reference}} \times 100\%$$

where: Input is the normal display reading.
Reference is the user entered constant.
Percent is the displayed result.

Configuration

To configure the percent calculation, perform the following steps:

1. Press SHIFT then % to display the present value:

   REF:+1.000000^

2. Enter a reference sign, value, and units prefix. Use the ◀ and ▶ keys to choose a numerical place and use the ▲ and ▼ keys to increment or decrement the digits.
3. Press ENTER when done.

The Model 2000 will display the result of the calculation. The result is positive when the input exceeds the reference and negative when the input is less than the reference. Engineering units are used to show values in the range 1 nano to 1000G. Exponential notation is used above that range.

dBm calculation

dBm is defined as decibels above or below a 1mW reference. With a user-programmable reference impedance, the Model 2000 reads 0dBm when the voltage needed to dissipate 1mW through the reference impedance is applied. The relationship between dBm, a reference impedance, and the voltage is defined by the following equation:

$$\text{dBm} = 10 \log \frac{\left(V_{IN}^2 / Z_{REF}\right)}{1\text{mW}}$$

Where: V_{IN} is the DC or AC input signal.
Z_{REF} is the specified reference impedance.

NOTE *Do not confuse reference impedance with input impedance. The input impedance of the instrument is not modified by the dBm parameter.*

If a relative value is in effect when dBm is selected, the value is converted to dBm then REL is applied to dBm. If REL is applied after dBm has been selected, dBm math has REL applied to it.

Configuration

To set the reference impedance, perform the following steps:

1. After selecting dBm, the present reference impedance is displayed (1-9999Ω):

   REF: 0000

2. To change the reference impedance, use the ◀ and ▶ keys to select the numeric position. Then use the ▲ and ▼ keys to select the desired value. Be sure to press ENTER after changing the reference impedance.

NOTES *dBm is valid for positive and negative values of DC volts.*

The mX+b and percent math operations are applied after the dBm or dB math. For example, if mX+b is selected with m=10 and b=0, the display will read 10.000 MXB for a 1VDC signal. If dBm is selected with Z_{REF} = 50Ω, the display will read 130MXB.

dB calculation

Expressing DC or AC voltage in dB makes it possible to compress a large range of measurements into a much smaller scope. The relationship between dB and voltage is defined by the following equation:

$$dB = 20 \log \frac{V_{IN}}{V_{REF}}$$

where: V_{IN} is the DC or AC input signal.
V_{REF} is the specified voltage reference level.

The instrument will read 0dB when the reference voltage level is applied to the input.

If a relative value is in effect when dB is selected, the value is converted to dB then REL is applied to dB. If REL is applied after dB has been selected, dB has REL applied to it.

Configuration

To set the reference voltage, perform the following steps:

1. After selecting dB, the present reference voltage level is displayed:

   REF: +0.000000

2. To change the reference level, use the ◀ and ▶ keys to select the numeric position. Then use the ▲ and ▼ keys to select the desired value. Be sure to press ENTER after changing the reference voltage.

NOTES *The dB calculation takes the absolute value of the ratio V_{IN} / V_{REF}*

The largest negative value of dB is -160dB. This will accommodate a ratio of V_{IN} = 1µV and V_{REF} = 1000V.

Measuring continuity

The Model 2000 uses the 1kΩ range to measure circuit continuity. After selecting continuity, the unit prompts you for a threshold resistance level (1Ω-1000Ω). The Model 2000 alerts you with a beep when a reading is below the set level.

To measure the continuity of a circuit, press SHIFT then CONT, set the threshold resistance level and connect the circuit.

NOTE *Continuity has a non-selectable reading rate of FAST (0.1 PLC).*

Connections

Connect the circuit you want to test to the INPUT HI and INPUT LO terminals of the Model 2000. The test current flows from the INPUT HI as shown in Figure 2-9.

Figure 2-9
Continuity measurements

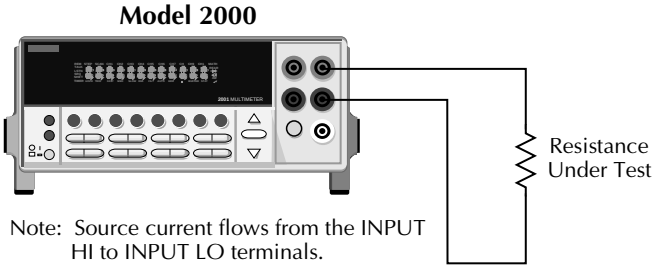

Threshold resistance level

You can define a threshold resistance from 1Ω to 1000Ω. The factory setting is 10Ω. Follow these steps to define the resistance level:

1. Press SHIFT then CONT.
2. Use the ◀ and ▶ keys to choose a numerical place and use the ▲ and ▼ keys to increment or decrement the digits. Enter a value from 1 to 1000.
3. Press ENTER to confirm your setting.

Testing diodes

With a Model 2000, you can measure the forward voltage drop of general-purpose diodes and the zener voltage of zener diodes. To test diodes, press SHIFT then ⊣▶⊢, set the test current range, connect the diode, and take a reading from the display.

NOTE *Diode test has a non-selectable reading rate of MEDium (1 PLC).*

Connections

Connect the diode leads to the INPUT HI and INPUT LO terminals on the Model 2000. The test current flows from the INPUT HI terminal as shown in Figure 2-10.

Figure 2-10
Diode testing

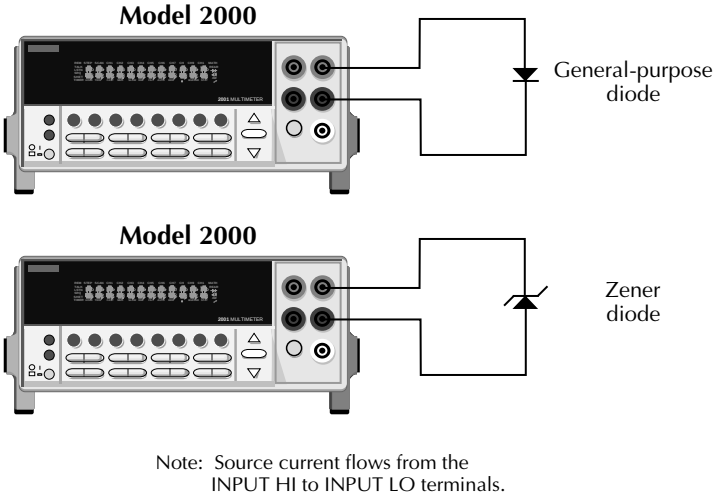

Range

You can set the test current range from the front panel. The choices are 1mA, 100µA, and 10µA. The factory test current setting is 1mA. To set the test current, do following:

1. Press SHIFT then ⊣▶⊢.
2. Use the ▲ and ▼ keys to scroll through the three test current selections.

The diode test measures voltages on the 3V range for the 1mA test current and the 10V range for the 100µA and 10µA ranges. If a reading is more than 10V, the Model 2000 displays the "OVERFLOW" status message.

3
Measurement Options

Introduction

This section describes the front panel features of the Model 2000. For those measurement options accessible only by a remote interface, refer to Sections 4 and 5. This section is organized as follows:

- **Measurement configuration —** Describes ranging, filtering, relative readings, digits of resolution, and measurement rate.
- **Trigger operations —** Uses a trigger model to explain trigger modes and sources.
- **Buffer operations —** Discusses the reading storage buffer and buffer statistics.
- **Limit operations —** Defines how to set reading limits.
- **Scan operations —** Explains the internal and external scanning capabilities.
- **System operations —** Gives details on setup saving and restoring, selecting a remote interface, and accessing test and calibration.

Measurement configuration

The following paragraphs discuss configuring the multimeter for making measurements. See the end of Appendix A for information about optimizing readings for speed or accuracy.

Range

The selected measurement range affects both the ultimate digits and accuracy of the measurements as well as the maximum signal that can be measured. The range setting (fixed or auto) for each measurement function is saved when changing functions.

Maximum readings

The full scale readings for every range on each function are 20% overrange except for the 1000VDC, 750VAC, 3ADC, 3AAC, and diode test ranges.

Input values more than the maximum readings cause the "OVERFLOW" messages to be displayed.

Manual ranging

To select a range, simply press the RANGE ▲ or ▼ key. The instrument changes one range per keypress. The selected range is displayed for one second.

If the instrument displays the "OVERFLOW" message on a particular range, select a higher range until an on-range reading is displayed. Use the lowest range possible without causing an overflow to ensure best accuracy and resolution.

Note that the temperature and continuity functions have just one range.

Autoranging

To enable autoranging, press the AUTO key. The AUTO annunciator turns on when autoranging is selected. While autoranging is selected, the instrument automatically chooses the best range to measure the applied signal. Autoranging should not be used when optimum speed is required.

Note that up-ranging occurs at 120% of range, while down-ranging occurs at 10% of nominal range.

To cancel autoranging, press AUTO or the RANGE ▲ or ▼ key. Pressing AUTO to cancel autoranging leaves the instrument on the present range.

The AUTO key has no effect on the temperature, continuity, and diode test functions.

Filter

FILTER lets you set the filter response to stabilize noisy measurements. The Model 2000 uses a digital filter, which is based on reading conversions. The displayed, stored, or transmitted reading is simply an average of a number of reading conversions (from 1 to 100).

To select a filter:

1. Press FILTER once if the FILT annunciator is off; press twice if FILT is on.
2. Enter the number of readings.
3. Select the type of filter you want (moving average or repeating), then press ENTER.

The FILT annunciator turns on. When a filter is enabled, the selected filter configuration for that measurement function is in effect.

Pressing FILTER once disables the filter.

NOTE *The filter can be set for any measurement function except frequency, period, continuity, and diode test.*

Filter types

The moving average filter uses a first-in, first-out stack. When the stack becomes full, the measurement conversions are averaged, yielding a reading. For each subsequent conversion placed into the stack, the oldest conversion is discarded, and the stack is re-averaged, yielding a new reading.

For the repeating filter, the stack is filled and the conversions are averaged to yield a reading. The stack is then cleared and the process starts over. Choose this filter for scanning so readings from other channels are not averaged with the present channel.

Figure 3-1
Moving average and repeating filters

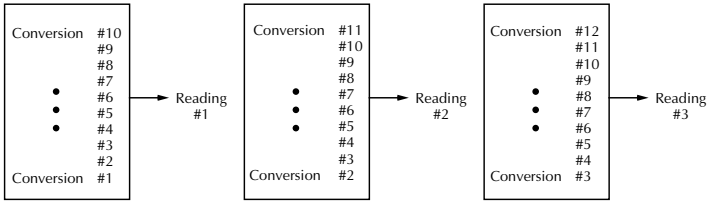

A. Type - Moving Average, Readings = 10

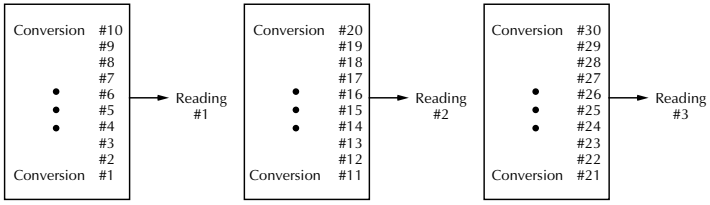

B. Type - Repeating, Readings = 10

Response time

The filter parameters have speed and accuracy tradeoffs for the time needed to display, store, or output a filtered reading. These affect the number of reading conversions for speed versus accuracy and response to input signal changes.

Relative

The rel (relative) function can be used to null offsets or subtract a baseline reading from present and future readings. When rel is enabled, the instrument uses the present reading as a relative value. Subsequent readings will be the difference between the actual input value and the rel value.

You can define a rel value for each function. Once a rel value is established for a measurement function, the value is the same for all ranges. For example, if 50V is set as a rel value on the 100V range, the rel is also 50V on the 1000V, 10V, 1V, and 100mV ranges.

Thus, when you perform a zero correction for DCV, Ω2, and Ω4 measurements by enabling REL, the displayed offset becomes the reference value. Subtracting the offset from the actual input zeroes the display, as follows:

Actual Input – Reference = Displayed Reading

A rel value can be as large as the highest range.

Selecting a range that cannot accommodate the rel value does not cause an overflow condition, but it also does not increase the maximum allowable input for that range. For example, on the 10V range, the Model 2000 still overflows for a 12V input.

To set a rel (relative) value, press REL key when the display shows the value you want as the relative value. The REL annunciator turns on. Pressing REL a second time disables rel.

You can input a REL value manually using the mX+b function. Set M for 1 and B for any value you want. Pressing REL enables that value to be the relative value. See Section 2 for more information on the mX+b function.

Digits

The display resolution of a Model 2000 reading depends on the DIGITS setting. It has no effect on the remote reading format. The number of displayed digits does not affect accuracy or speed. Those parameters are controlled by the RATE setting.

Perform the following steps to set digits for a measurement function:

1. Press the desired function.
2. Press the DIGITS key until the desired number of digits is displayed (3½ to 6½).

NOTE *Frequency and period can be displayed with four to seven digits.*

Rate

The RATE operation sets the integration time of the A/D converter, the period of time the input signal is measured (also known as aperture). The integration time affects the usable digits, the amount of reading noise, as well as the ultimate reading rate of the instrument. The integration time is specified in parameters based on a number of power line cycles (NPLC), where 1 PLC for 60Hz is 16.67msec and 1 PLC for 50Hz and 400Hz is 20msec.

In general, the fastest integration time (FAST (0.1 PLC) from the front panel, 0.01 PLC from the bus) results in increased reading noise and fewer usable digits, while the slowest integration time (10 PLC) provides the best common-mode and normal-mode rejection. In-between settings are a compromise between speed and noise.

The RATE parameters are explained as follows:

- FAST sets integration time to 0.1 PLC. Use FAST if speed is of primary importance (at the expense of increased reading noise and fewer usable digits).
- MEDium sets integration time to 1 PLC. Use MEDium when a compromise between noise performance and speed is acceptable.
- SLOW sets integration time to 10 PLC. SLOW provides better noise performance at the expense of speed.

NOTE *The integration time can be set for any measurement function except frequency, period, continuity (FAST), and diode test (MEDium). For frequency and period, this value is gate time or aperture.*

For the AC functions, MEDium and SLOW have no effect on the number of power line cycles. See the discussion on "Bandwidth" that follows.

Bandwidth

The rate setting for AC voltage and current measurements determines the bandwidth setting:

- Slow — 3Hz to 300kHz.
- Medium — 30Hz to 300kHz.
- Fast — 300Hz to 300kHz.

Bandwidth is used to specify the lowest frequency of interest. When the Slow bandwidth (3Hz to 300kHz) is chosen, the signal goes through an analog RMS converter. The output of the RMS converter goes to a fast (1kHz) sampling A/D and the RMS value is calculated from 1200 digitized samples (1.2s).

When the Medium bandwidth (30Hz to 300kHz) is chosen, the same circuit is used. However, only 120 samples (120ms) are needed for an accurate calculation because the analog RMS converter has turned most of the signal to DC.

In the Fast bandwidth (300Hz to 300kHz), the output of the analog RMS converter (nearly pure DC at these frequencies) is simply measured at 1 PLC (16.6ms).

Table 3-1 lists the rate settings for the various measurement functions. The FAST, MED, and SLOW annunciators are only lit when conditions in the table are met. In other case, the annunciators are turned off.

Table 3-1
Rate settings for the measurement functions

Function	**Rate**		
	Fast	**Medium**	**Slow**
DCV, DCI	NPLC=0.1	NPLC=1	NPLC=10
ACV, ACI	NPLC=1, BW=300	NPLC=X, BW=30	NPLC=X, BW=3
Ω2W, Ω4W	NPLC=0.1	NPLC=1	NPLC=10
FREQ, PERIOD	APER=1s	APER=1s	APER=1s
dB, dBm (ACV)	NPLC=1, BW=300	NPLC=X, BW=30	NPLC=X, BW=3
dB, dBm (DCV)	NPLC=0.1	NPLC=1	NPLC=10
Continuity	NPLC=0.1	N/A	N/A
Diode test	N/A	NPLC=1	N/A

Notes:
NPLC = number of power line cycles.
BW = lower limit of bandwidth (in Hz).
APER = aperture in seconds.
N/A = not available.
X = setting ignored.

Trigger operations

The following paragraphs discuss front panel triggering, the programmable trigger delay, the reading hold feature, and external triggering.

Trigger model

The flowchart of Figure 3-2 summarizes triggering as viewed from the front panel. It is called a trigger model because it is modeled after the SCPI commands used to control triggering. Note that for stepping and scanning, the trigger model has additional control blocks. These are described in “Scan operations” later in this section.

Figure 3-2
Front panel triggering without stepping/scanning

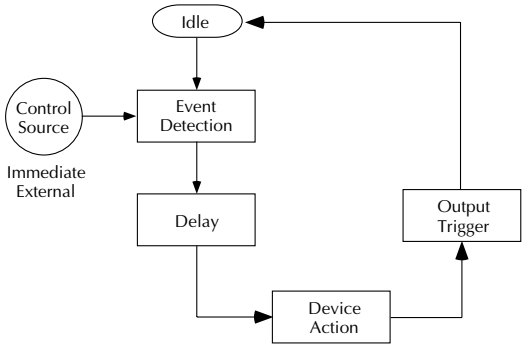

Idle

The instrument is considered to be in the idle state whenever it is not performing any measurements or scanning functions. From the front panel, the unit is considered idle at the end of a step or scan operation when the reading for the last channel remains displayed. To restore triggers, use the SHIFT-HALT keys.

Once the Model 2000 is taken out of idle, operation proceeds through the flowchart.

Control source and event detection

The control source holds up operation until the programmed event occurs and is detected. The control sources are described as follows:

- Immediate — With this control source, event detection is immediately satisfied allowing operation to continue.
- External — Event detection is satisfied for any of three conditions:
  - An input trigger via the Trigger Link line EXT TRIG is received.
  - A bus trigger (GET or *TRG) is received.
  - The front panel TRIG key is pressed. (The Model 2000 must be taken out of remote before it will respond to the TRIG key. Use the LOCAL key or send LOCAL 716 over the bus.)

Delay

A programmable delay is available after event detection. It can be set manually or an auto delay can be used. With auto delay, the Model 2000 selects a delay based on the function and range. The AUTO settings are listed in Table 3-2.

Table 3-2
Auto delay settings

Function	**Range and delay**						
DCV	100mV 1ms	1V 1ms	10V 1ms	100V 5ms	1000V 5ms		
ACV	100mV 400ms	1V 400ms	10V 400ms	100V 400ms	750V 400ms		
FREQ	100mV 1ms	1V 1ms	10V 1ms	100V 1ms	750V 1ms		
DCI	10mA 2ms	100mA 2ms	1A 2ms	3A 2ms			
ACI			1A 400ms	3A 400ms			
Ω2W, Ω4W	100Ω 3ms	1kΩ 3ms	10kΩ 13ms	100kΩ 25ms	1MΩ 100ms	10MΩ 150ms	100MΩ 250ms
Continuity		1kΩ 3ms					
Diode testing		1mA 1ms	100µA 1ms	10µA 1ms			

The delay function is accessed by pressing the SHIFT-DELAY keys. The present delay setting (AUTO or MANual) is displayed. Use the ▲ and ▼ keys to select the type of delay. If MANual is chosen, also enter the duration of the delay. The maximum is shown following:

99H:99M:99.999S

Press ENTER to accept the delay or EXIT for no change.

Changing the delay to MANual on one function changes the delays on all functions to MANual.

Device actions

The primary device action is a measurement. However, the device action block could include the following additional actions:

- Filtering — If the repeating filter is enabled, the instrument samples the specified number of reading conversions to yeildl single filtered reading. Only one reading conversion is performed if the filter is disabled, or after the specified number of reading conversions for a moving average filter is reached. The output of filter feeds hold.
- Hold — With hold enabled, the first processed reading becomes the “seed” reading and operation loops back within the device action block. After the next reading is processed, it is checked to see if it is within the selected window (0.01%, 0.1%, 1%, 10%) of the “seed” reading. If the reading is within the window, operation again loops back within the device action block. This looping continues until the specified number (2 to 100) consecutive readings are within the window. If one of the readings is not within the window, the instrument acquires a new “seed” reading and the hold process continues.
- Channel closure — When stepping or scanning, the last device action is to open the previous channel (if closed) and close the next channel. Using the hold feature provides an auto settling time for the scanner relays. Each open/close transition will restart the hold process and a reading for each channel will not occur until the relay settles.

Output trigger

After the device action, an output trigger occurs and is available at the rear panel Trigger Link connector. This trigger can be used to trigger another instrument to perform an operation (e.g., select the next channel for an external scan).

Counters

The trigger model for stepping and scanning contains additional blocks for counting samples (the number of channels to scan) and counting triggers. These counters are explained in the paragraph “Scan operations” later in this section.

Reading hold (autosettle)

When a hold reading is acquired as described in “Device actions”, an audible beep is sounded (if enabled) and the reading is considered a “true measurement”. The reading is held on the display until an “out of window” reading occurs to restart the hold process.

When operating remotely or scanning, the hold process seeks a new “seed"“once it has been satisfied and the reading has been released. When operating from the front panel, the hold process does not seek a new "seed" until the held condition is removed.

Hold example

1. Enable HOLD, select a window percentage and enter a count.
2. Apply test probes to a signal. Once the signal becomes stable enough to satisfy the hold condition, the reading is released, and the beeper sounds (if enabled).
3. Remove the hold condition by lifting the probes. Hold will then seek a new “seed”.

External triggering

The EXT TRIG key selects triggering from two external sources: trigger link and the TRIG key. When EXT TRIG is pressed, the TRIG annunciator lights and dashes are displayed to indicate that instrument is waiting for an external trigger. From the front panel, you can press the TRIG key to trigger a single reading. Pressing the EXT TRIG key again toggles you back to continuous triggers.

The Model 2000 uses two lines of the Trigger Link rear panel connector as External Trigger (EXT TRIG) input and Voltmeter Complete (VMC) output. The EXT TRIG line allows the Model 2000 to be triggered by other instruments. The VMC line allows the Model 2000 to trigger other instruments.

At the factory, line 1 is configured as VMC and line 2 as EXT TRIG. (Changing this configuration is described in the optional Model 2000 Repair Manual.) A connector pinout is shown in Figure 3-3.

Figure 3-3
Rear panel pinout

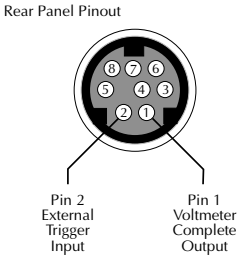

Pin Number	Description
1	Voltmeter Complete Output
2	External Trigger Input
3	no connection *
4	no connection *
5	no connection *
6	no connection *
7	Signal Ground
8	Signal Ground

* Either pin 3 or 5 may be configured as an output instead of pin 1. Either pin 4 or 6 may be configured as an input instead of pin 2. See the optional Model 2000 Repair Manual for details.

External trigger

The EXT TRIG input requires a falling-edge, TTL-compatible pulse with the specifications shown in Figure 3-4. In general, external triggers can be used to control measure operations. For the Model 2000 to respond to external triggers, the trigger model must be configured for it.

Figure 3-4
Trigger link input pulse specifications (EXT TRIG)

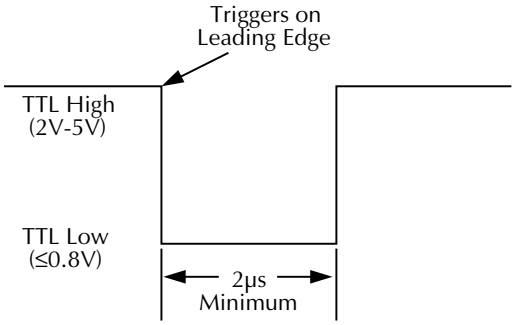

Voltmeter complete

The VMC output provides a TTL-compatible output pulse that can be used to trigger other instruments. The specifications for this trigger pulse are shown in Figure 3-5. Typically, you would want the Model 2000 to output a trigger after the settling time of each measurement.

Figure 3-5
Trigger link output pulse specifications (VMC)

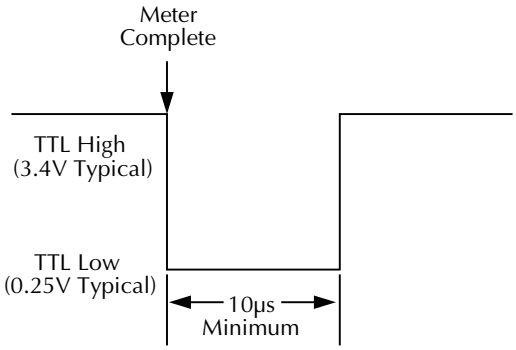

External triggering example

In a typical test system, you may want to close a channel and then measure the DUT connected to the channel with a multimeter. Such a test system is shown in Figure 3-6, which uses a Model 2000 to measure ten DUTs switched by a Model 7011 multiplexer card in a Model 7001/7002 Switch System.

Figure 3-6
DUT test system

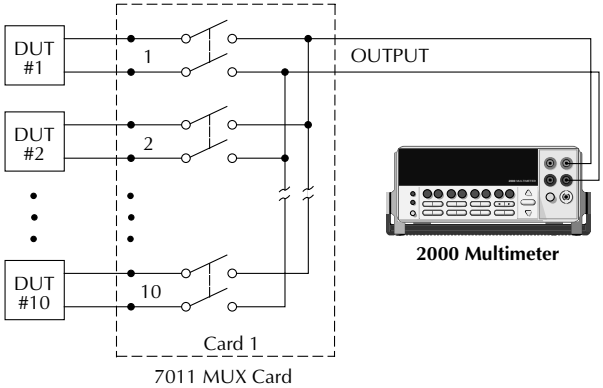

The Trigger Link connections for this test system are shown in Figure 3-7. Trigger Link of the Model 2000 is connected to Trigger Link (either IN or OUT) of the Model 7001/7002. Note that with the default trigger settings on the Model 7001/7002, line #1 is an input and line #2 is an output. This complements the trigger lines on the Model 2000.

Figure 3-7
Trigger link connections

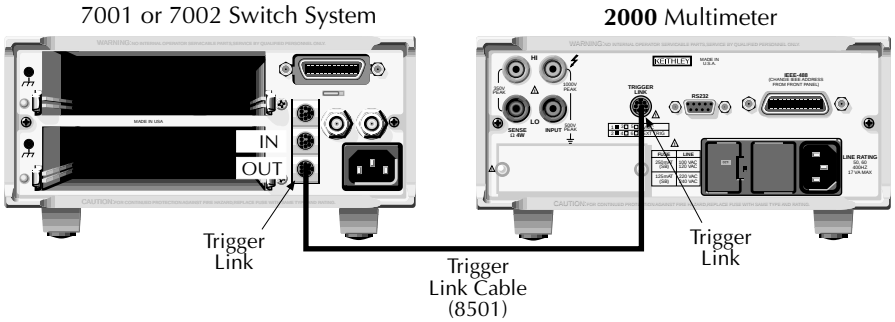

For this example, the Model 2000 and 7001/7002 are configured as follows:

Model 2000:

Factory defaults restored (accessed from SHIFT-SETUP)
External scanning, channels 1 - 10, no timer, 10 readings (accessed from SHIFT-CONFIG)
External triggers (accessed from EXT TRIG)

Model 7001 or 7002:

Factory defaults restored
Scan list = 1!1-1!10,
Number of scans = 1
Channel spacing = TrigLink

To run the test and store readings in the Model 2000 with the unit set for external triggers, press STEP or SCAN. The Model 2000 waits (with the asterisk annunciator lit) for an external trigger from the Model 7001/7002.

Press STEP on the Model 7001/7002 to take it out of idle and start the scan. The scanner's output pulse triggers the Model 2000 to take a reading, store it, and send a trigger pulse. The following explanation on operation is referenced to the operation model shown in Figure 3-8.

Figure 3-8
Operation model for triggering example

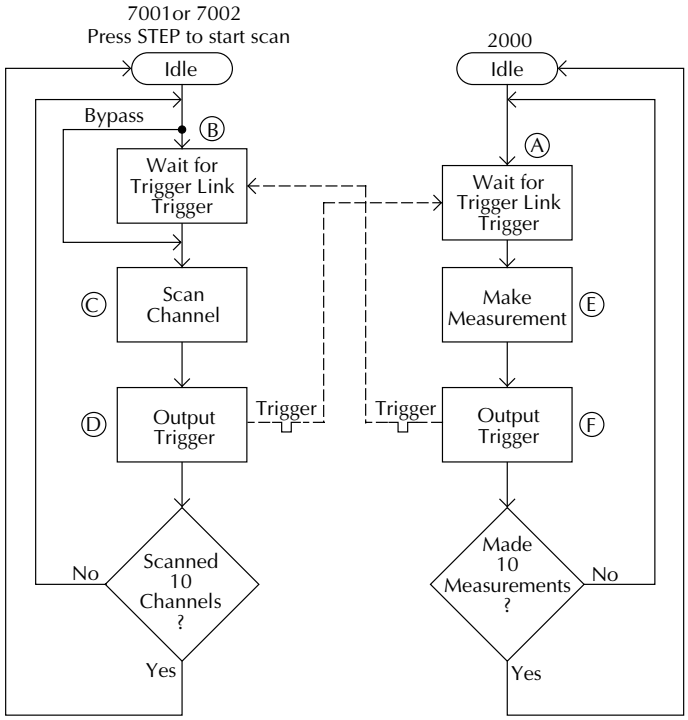

A Pressing EXT TRIG then STEP or SCAN on the multimeter places it at point A in the flowchart, where it is waiting for an external trigger.

B Pressing STEP takes the Model 7001/7002 out of the idle state and places operation at point B in the flowchart.

C For the first pass through the model, the scanner does not wait at point B for a trigger. Instead, it closes the first channel.

D After the relay settles, the Model 7001/7002 outputs a Channel Ready pulse. Since the instrument is programmed to scan ten channels, operation loops back up to point B, where it waits for an input trigger.

E and **F** Remember that the Model 2000 operation is at point A waiting for a trigger. The output Channel Ready pulse from the Model 7001/7002 triggers the multimeter to measure DUT #1 (point E). After the measurement is complete, the Model 2000 outputs a completion pulse (point F) and then loops back to point A, where it waits for another input trigger.

The trigger applied to the Model 7001/7002 from the Model 2000 closes the next channel in the scan. This triggers the multimeter to measure the next DUT. The process continues until all ten channels are scanned and measured.

External triggering with BNC connections

An adapter cable is available to connect the micro-DIN Trigger Link of the Model 2000 to instruments with BNC trigger connections. The Model 8503 DIN to BNC Trigger Cable has a micro-DIN connector at one end and two BNC connectors at the other end. The BNC cables are labeled VMC (trigger line 1) and EXT TRIG (trigger line 2).

Figure 3-9 shows how a Keithley Model 706 Scanner can be connected to the Trigger Link of the Model 2000 using the adapter cable. With this adapter, a Model 706 could be substituted for the Model 7001/7002 in the previous example. With the Model 706 set for External Triggering, the test would start when the single scan mode is selected and initiated.

If the Model 2000 trigger line configuration has been changed from the factory setting, the Model 8502 Trigger Link Adapter must be used to interface with instruments having BNC trigger connections. It has two micro-DIN connectors and six BNC connectors, one for each trigger line.

Figure 3-9
DIN to BNC trigger cable

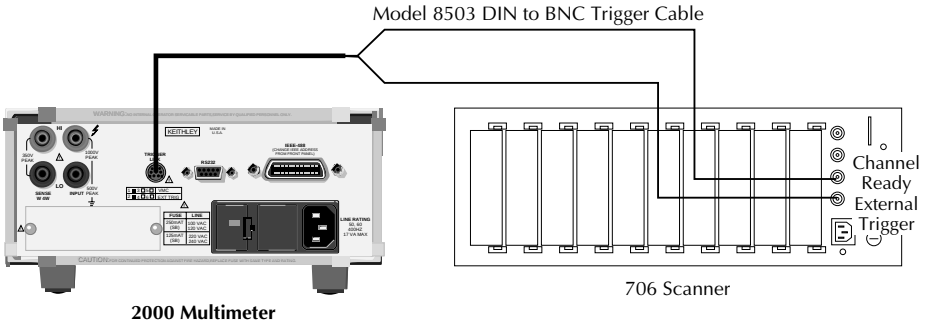

Buffer operations

The Model 2000 has a buffer to store from two to 1024 readings and units. It also stores the channel number for scanned readings and overflow readings. In addition, recalled data includes statistical information, such as minimum, maximum, average, and standard deviation.

The buffer fills with the requested number of readings and stops. Readings are placed in the buffer after any math operations are performed. Buffered data is overwritten each time the storage operation is selected. The data is volatile; it is not saved through a power cycle.

The following paragraphs discuss storing and recalling buffered data.

Storing readings

Use the following procedure to store readings:

1. Set up the instrument for the desired configuration.
2. Press the STORE key.
3. Using the ◀ , ▶ , ▲, and ▼ keys to select the number of readings desired.
4. Press ENTER. The asterisk (*) annunciator turns on to indicate a data storage operation. It will turn off when the storage is finished.

Recalling readings

Use the following steps to view stored readings and buffer statistics:

1. Press RECALL. The BUFFER annunciator indicates that stored readings are being displayed. The arrow annunciator indicates that more data can be viewed with the ◀ , ▶ , ▲, and ▼ keys.
2. As shown in Figure 3-10, use the cursor keys to navigate through the reading numbers, reading values, and statistics. For any of the buffer statistics (maximum, minimum, average, statndard deviation), the STAT annunciator is on.
3. Use the EXIT key to return to the normal display.

Figure 3-10
Buffer locations

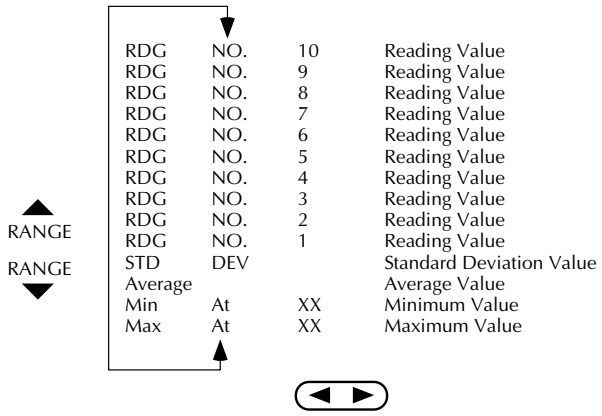

Buffer statistics

The MAX AT and MIN AT values are the maximum and minimum values in the buffer. The AVERAGE value is the mean of the buffered readings. The equation used to calculate the mean is:

$$y = \frac{\sum_{i=1}^{n} x_i}{n}$$

where: x_i is a stored reading
n is the number of stored readings

The STD DEV value is the standard deviation of the buffered readings. The equation used to calculate the standard deviation is:

$$y = \sqrt{\frac{\sum_{i=1}^{n} x_i^2 - \left(\frac{1}{n}\left(\sum_{i=1}^{n} x_i\right)^2\right)}{n-1}}$$

where: x_i is a stored reading
n is the number of stored readings

NOTE *The Model 2000 uses IEEE-754 floating point format for math calculations.*

Limit operations

Limit operations set and control the values that determine the HI / IN / LO status of subsequent measurements. Limits can be applied to all measurement functions except continuity. The limit test is performed after mX+b and percent math operations. Unit prefixes are applied before the limit test, for example:

- Low limit = -1.0, High limit = 1.0
  A 150mV reading equals 0.15V (IN).
- Low limit = -1.0, High limit = 1.0
  A 0.6kΩ reading equals 600Ω (HI).

You can configure the multimeter to beep or not when readings are inside or outside of the limit range.

Setting limit values

Use the following steps to enter high and low limit values:

1. Press the SHIFT-LIMITS keys to view the present HI limit value:

   HI:+1.000000 ∧

   This value represents the absolute value of that function.

2. Use the ◀ , ▶ , ▲, and ▼ keys to enter the desired value. Move the cursor to the rightmost position and use the ▲ and ▼ keys to move the decimal point.
3. Press ENTER to view the present LO limit value:

   LO:-1.000000 ∧

   This value represents the absolute value of that function.

4. Enter the desired value for the low limit. Pressing ENTER returns to the normal display.

Enabling limits

Use the following procedure to turn on the limits operation:

1. Press the SHIFT-ON/OFF keys to view the present beeper status:

   BEEP: NEVER

2. Use the ▲ and ▼ keys to change the beeper status (NEVER, OUTSIDE, INSIDE). Press ENTER when done.

When the multimeter returns to the normal display, the HI/IN/LO status is displayed along with the reading. To disable limit testing, press SHIFT-ON/OFF again. An example of using limits to sort resistors is shown in Figure 3-11.

Figure 3-11
Using limit test to sort 100Ω, 10% resistors

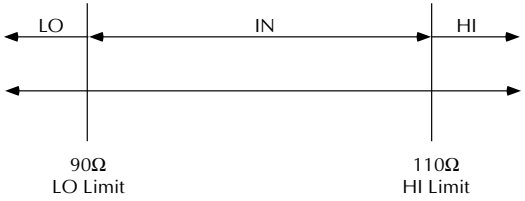

Scan operations

The Model 2000 can be used with an internal scanner card (Model 2000 SCAN or 2001-TCS-CAN) or with external scanner cards installed in switching mainframes such as the Models 707, 7001, and 7002. The following paragraphs discuss various aspects of using scanning with the Model 2000.

Connection precautions

WARNINGS **Connection information for scanner cards is intended for qualified service personnel. Do not attempt to connect the DUT or external circuitry to a scanner card unless qualified to do so.**

To prevent electric shock that could result in serious injury or death, adhere to the following safety precautions:

- **Before making or breaking connections to the scanner card, make sure the Model 2000 power is turned off and power is removed from all external circuitry.**
- **Do not connect signals that will exceed the maximum specifications of the scanner card.**

If both the front panel terminals and the scanner card terminals are connected at the same time, the maximum signal ratings of the front panel terminals are reduced to the maximum signal ratings of the scanner card.

As described in the International Electrotechnical Commission (IEC) Standard IEC 664, scanner cards are Installation Category I and must not be connected to mains.

Scanning overview

A scanner lets you switch among a number of input signals to the Model 2000 for measurement. The channel control and scanning capabilities depend on whether an internal or external card is being used, as well as on the capabilities of the scanner card. Refer to the documentation supplied with the scanner card for specific connection information.

Using an internal scanner card

The optional Model 2000-SCAN scanner card lets you step through or scan up to ten 2-pole channels or five 4-pole channels.

The optional Model 2001-TCSCAN Thermocouple/General Purpose Scanner Card lets you multiplex one of nine 2-pole or one of four 4-pole analog signals into the Model 2000, and/or any combination of 2- or 4-pole analog signals.

Using external scanner cards

When using external channels, the switching mainframe controls the opening and closing of individual channels. To synchronize Model 2000 measurements with external channel closures, connect the Trigger Link lines of the multimeter and switching mainframe. Refer to “Trigger operations” earlier in this section for details and an example on using external triggering.

Front panel scanner controls

In addition to the trigger keys discussed previously, front panel keys that affect scanner card operation include:

- ◀ and ▶ — Allow you to manually step through consecutive internal card channels.
- OPEN and CLOSE — Let you selectively open and close internal card channels.
- SHIFT-CONFIG — Selects internal or external scanning, scan list, time between scans, and reading count.
- STEP — Starts a stepping operation of consecutive channels, where output triggers are sent after every channel closure.
- SCAN — Starts a scanning operation of consecutive channels, where an output trigger is sent at the end of the scan list.
- SHIFT-HALT — Stops stepping or scanning and restores the trigger model to a non-scanning mode.

Using ◀ and ▶ keys

The ◀ and ▶ keys can be used to manually scan through channels on the internal scanner card. With a scanner card installed in the option slot, press the ▶ key to manually increment channels or the ◀ key to manually decrement channels. The annunciator of the closed channel is lit. Hold down either key to manually scan through channels continuously. Press OPEN to open all channels.

Using OPEN and CLOSE keys

The OPEN and CLOSE keys control channels on the internal scanner card only. The keys allow you to directly:

- Close a specific channel (or channel pair for 4-wire resistance).
- Immediately open any internal closed channel (or channel pair for 4-wire resistance).

With a scanner card installed in the option slot of the Model 2000, the following prompt is displayed when the CLOSE key is pressed:

CLOSE CHAN:01

Use the ◀ , ▶ , ▲, and ▼ keys to display the desired channel (1 to 10) and press ENTER. The annunciator of the closed channel will be displayed on the front panel along with normal readings. Selecting a different channel from the one that is presently closed will cause the closed channel to open and allow a settling time before closing the selected channel.

Channel relays will be closed according to the presently selected function. If a 4-wire function is selected, both the selected channel relay and the matching relay pair will be closed. Fixed 4-pole relay pairs are:

- 1 and 6 (not available for Model 2001-TCSCAN)
- 2 and 7
- 3 and 8
- 4 and 9
- 5 and 10

Pressing the OPEN key will immediately open any closed scanner card channel or channel pair for 4-wire resistance.

Stepping and scanning trigger model additions

The trigger model presented in “Trigger operations” earlier in this section has some additional capabilities when stepping or scanning. These are outlined below:

- Timer — With this control source, event detection is immediately satisfied on the initial pass. Each subsequent detection is satisfied when the programmed timer interval (up to 99H:99M:99.99S) elapses.
- Reading counter — For both stepping and scanning, the reading count can be entered from SHIFT-CONFIG. (This is referred to as the trigger counter over the bus.) The reading counter can bypass the idle state. Operation will wait until the programmed control source event occurs.
- Channel counter — For scanning, the scan list length (maximum channel less minimum channel) is used to bypass the control source allowing a specified number of device actions to occur. (This counter is referred to as the sample counter over the bus.)

These additional blocks are shown in the trigger models of Figures 3-12 and 3-13. Uses of the timer control source, reading counter, and channel counter are shown in the scanning examples later in this section.

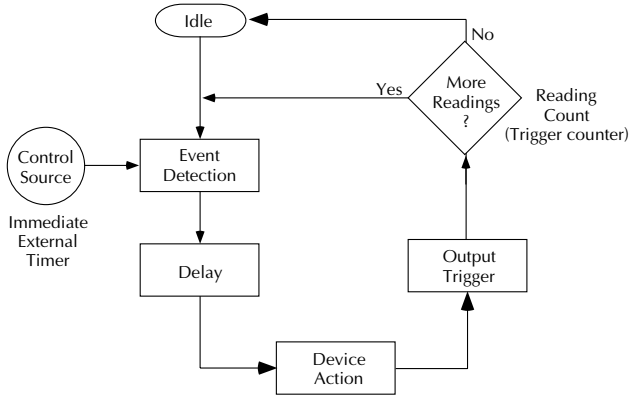

Figure 3-12
Front panel triggering with stepping

Figure 3-13
Front panel triggering with scanning

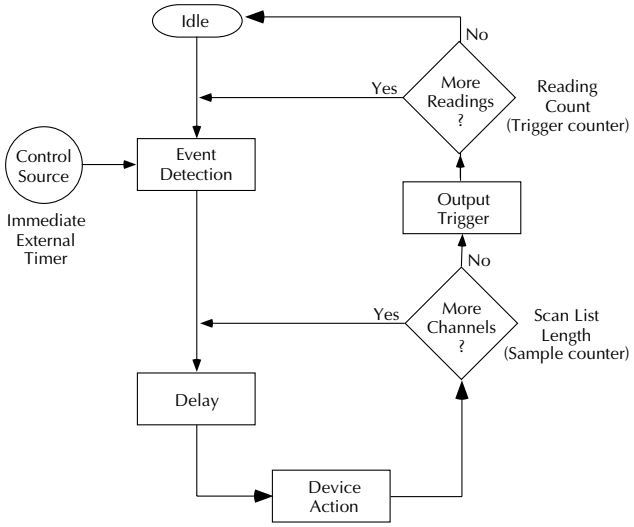

Using SHIFT-CONFIG to configure stepping and scanning

From the SHIFT-CONFIG key combination, you can select internal or external scanning, the minimum and maximum channels in the scan list, the time between scans, and the reading count.

1. To configure stepping or scanning, perform the following:
2. Select the desired measurement function.
3. Press the SHIFT-CONFIG keys to access the step/scan configuration.
4. Select the type of scan (INTernal or EXTernal) by using the ▲ and ▼ keys and pressing ENTER.
5. Select the first channel in the scan list (MINimum CHANnel) by using the ◀ , ▶ , ▲, and ▼ keys and pressing ENTER.
6. Select the last channel in the scan list (MAXimum CHANnel) and press ENTER to confirm.
7. The next selection is for timed scans. (This is the Timer control source in the trigger model.) It sets a user-specified interval for starting scans. If you choose timed scans, the Model 2000 prompts for a time interval:

   00H:00M:00.000S

   Use the ◀ , ▶ , ▲, and ▼ keys to select a time interval and press ENTER to confirm.

8. Next, you are prompted for a reading count (RDG CNT). This can be less than, equal to, or greater than the scan list length (up to 1024). It is the number of readings that will be stored in the buffer. The effects of these choices are further described in the scanning examples.
9. Press ENTER when done to return to the normal display. Note that scanned readings are always stored in the buffer, up to the setting for RDG CNT.

Scanning examples

The following examples demonstrate the use of reading count, timed scans, delay, and external scanning.

Counters

One of the configuration options for stepping and scanning is the reading count. The example of Figure 3-14 shows how different settings of RDG CNT affect these operations:

Figure 3-14
Internal scanning example with reading count option

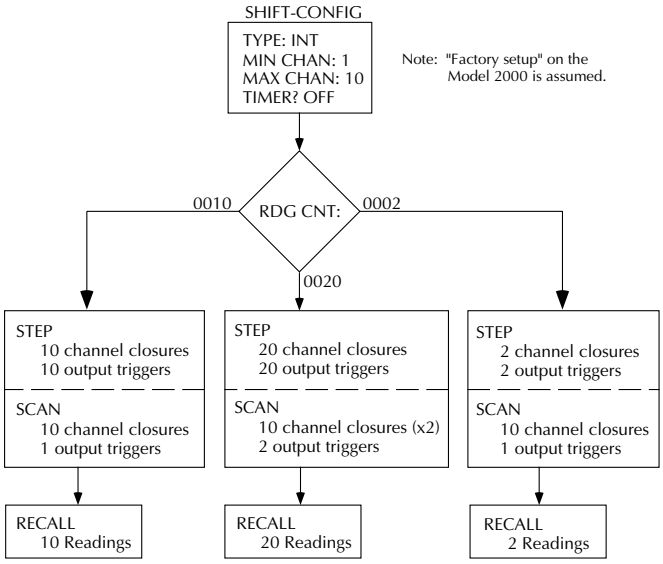

- With a reading count (0010) equal to the scan list length (10), a step operation consecutively closes ten channels and sends an output trigger after each channel. A scan operation also consecutively closes ten channels but sends an output trigger only at the end of the scan.
- With a reading count (0020) greater than the scan list length (10), stepping yields 20 channel closures and 20 output triggers. Scanning also goes through the scan list twice but sends an output trigger only at the end of each scan.
- With a reading count (0002) less than the scan list length (10), stepping yields two channel closures and output triggers. Scanning goes through the entire scan list and sends an output trigger but only two readings are stored.

NOTE *If the reading count divided by the scan list length is not an integer, it is rounded up. For example, if the reading count is 15 and the scan list length is 10, there will be two output triggers for scanning.*

The differences between stepping and scanning counters for bus commands are summarized in Table 3-3.

Table 3-3
Bus commands parameters for stepping and scanning counters

Operation	**:SAMPle:COUNt**	**:TRIGger:COUNt**
STEP	1	reading count
SCAN	scan list length	(reading count) / (scan list length)

Timing

Another configuration option for stepping and scanning is the timing of channel closures. The example of Figure 3-15 shows how different settings of TIMER and DELAY affect these operations. These are the Timer control source and the Delay block shown in the trigger models of Figures 3-12 and 3-13.

- With the timer ON and set to five seconds and delay set to AUTO, channels are stepped through at five-second intervals with an output trigger after each closure. A scan operation yields ten channels scanned immediately with an output trigger at the end of the scan.
- With the timer OFF and the delay set to MANual for five seconds, stepping and scanning through the channels is timed the same. The difference is in the number of output triggers, with stepping sending a trigger after each channel closure and scanning sending a trigger at the end of the scan.

When using both the timer and delay parameters, the timer is not started until after the delay. For example, if the timer is two minutes and the delay is ten seconds, the timer is not started until 10sec after pressing SCAN. Each successive scan will occur at 2:10.0, 4:10.0, etc.

If the total delay time per scan is greater than or equal to the timer setting, the timer condition is already satisfied and, effectively, is ignored.

Figure 3-15
Internal scanning example with timer and delay options

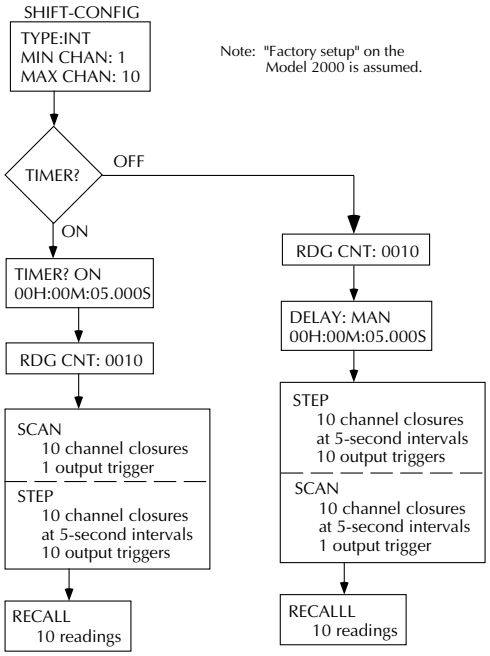

External scanning

The example of Figure 3-16 shows the front panel operations to configure an external scan. The trigger and signal connections were shown previously in “Trigger operations”. Both instrument setups assume factory defaults. Set the Model 2000 for the desired measurement function.

1. On the Model 7001 Switch System, enter a scan list of channels 1 to 10 on card 1.
2. Also on the Model 7001, configure the instrument for Trigger Link triggers and one scan of ten channels.
3. On the Model 2000 Multimeter, configure an external scan of the first ten channels.
4. Set the Model 2000 for external triggers by pressing EXT TRIG. The display will be dashes.
5. Press STEP or SCAN on the Model 2000. The asterisk and STEP or SCAN annunciator will light.
6. Press STEP on the Model 7001 to start channel closures.
7. After the scan, you can recall ten readings from the Model 2000 buffer.

NOTE *When using an external thermocouple scanner card and channel 1 as a reference, the Model 2000 only recognizes channel 1 when a step or scan is performed. If using a Model 7001 or 7002 to close channel 1 manually, the Model 2000 will not interpret that channel as the reference junction without a step or scan operation.*

Figure 3-16
External scanning example with Model 7001

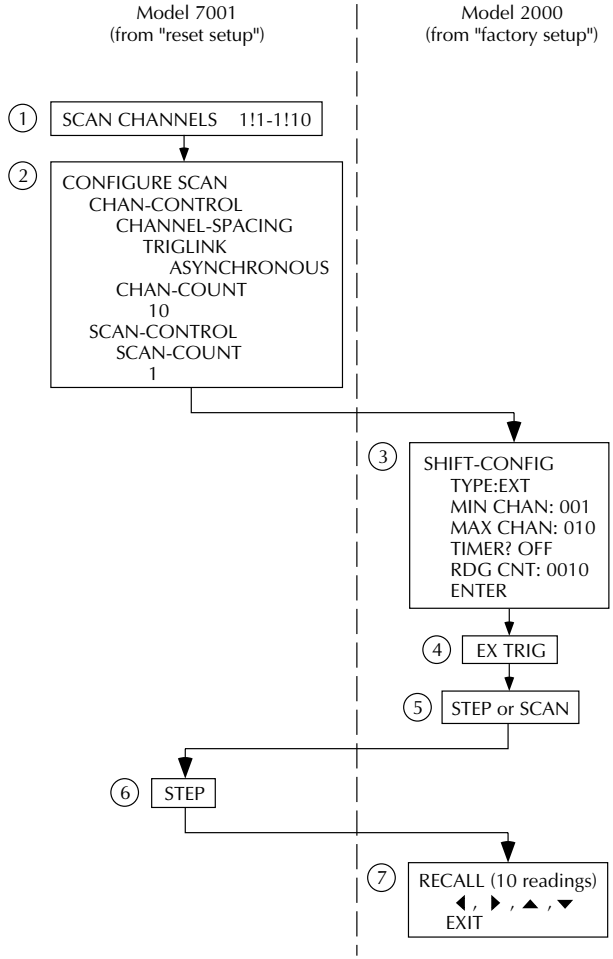

System operations

The Model 2000 has other front panel operations. Saving and restoring setup information is described in Section 2 — Basic Measurements. Selecting the remote interface and language is covered in Section 4 — Remote Operation.

Self-test

The TEST selections are used as diagnostic tools to isolate problems within the Model 2000. Information on using these test procedures is included in the optional Model 2000 Repair Manual.

Calibration

The CAL selections are used to view the calibration date and next due date, to perform calibration, and to view the number of times calibration has been performed. Some of the items are password-protected to prevent unintended changing of calibration constants.

To view the calibration dates, press SHIFT-CAL. Press ENTER at the DATES prompt. The first date is the last time calibration was performed. The NDUE date is the calibration due date.

Running calibration is password-protected. Refer to the Model 2000 Calibration Manual for details.

To view the calibration count, press ENTER at the COUNT prompt.

4
Remote Operation

Introduction

This section includes the following information:

- Selecting an interface
- Selecting a language
- RS-232 operation
- GPIB bus operation and reference
- Status structure
- Trigger model (GPIB operation)
- Programming syntax
- Common commands

Selecting an interface

The Model 2000 multimeter supports two built-in remote interfaces:

- GPIB bus
- RS-232 interface

You can use only one interface at a time. The factory interface selection is the GPIB bus. You can select the interface only from the front panel. The interface selection is stored in non-volatile memory; it does not change when power has been off or after a remote interface reset.

Before you select a remote interface, consider the programming language you want to use. For more information about selecting programming languages, see this section.

RS-232

You can connect a controller to the RS-232 interface. Some considerations for selecting the RS-232 interface are the following:

- You must define the baud rate, enable or disable software handshake XON/XOF.
- You can only use the SCPI programming language with the RS-232 interface.

To select RS-232 as the remote interface, do the following:

1. Access the RS-232 configuration by pressing SHIFT then RS232.

   You see: `RS232: OFF`

2. Move to the on/off selection by pressing the ▶ key.

   You see `OFF` selection blinking.

3. Turn on the RS-232 interface by toggling the selection to ON using the ▼ or ▲ key and press ENTER.

You can exit the configuration menu by pressing EXIT.

For more information about the RS-232 interface, see section RS-232 operation.

GPIB bus

The GPIB bus is the IEEE-488 interface. You must select a unique address for the Model 2000 multimeter. The address is displayed when the multimeter is turned on. At the factory, the address is set to 16.

Since GPIB is the interface selection defined by the factory, only follow these steps to select the GPIB interface if you have been previously using the RS-232 remote programming interface:

1. Select the GPIB option by pressing SHIFT then GPIB.

   You see: GPIB: OFF

2. Move to the on/off selection by pressing the ▶ key.

   You see `OFF` selection blinking slowly.

3. Turn on the GPIB interface by toggling the selection to ON using the ▼ or ▲ key and press ENTER.

Turning off the RS-232 interface automatically selects GPIB as the remote programming interface.

Selecting a language

Choose one of three languages to program the Model 2000 multimeter:

- SCPI (Signal Oriented Measurement Commands)
- Keithley Models 196/199 Digital Multimeter
- Fluke Model 8840A/8842A Digital Multimeter

The factory sets the language selection as SCPI.

You only can select a programming language from the front panel. The language selection is stored in non-volatile memory, which means it does not change when power has been off or after a remote interface reset.

Table 4-1 shows the languages supported by the two available interfaces:

Table 4-1
Language support

Language	**GPIB**	**RS-232**
SCPI	Yes	Yes
Keithley Models 196/199	Yes	No
Fluke Model 8840A/8842A	Yes	No

As you make your language selection, keep in mind that the language you select determines the remote operations allowed.

To select a programming language, follow these steps:

1. Access the GPIB configuration options by pressing SHIFT then GPIB.

   You see `GPIB:ON` with GPIB blinking.

2. Select the language configuration option by pressing the ENTER key twice.

   You see: `LANG:<name>`

3. Move to the language selection field by pressing the ▶ key.
4. Select the programming language you want by pressing the ▼ or ▲ key until you see the appropriate language.

   The menu scrolls through these choices: SCPI, 199 (Keithley Models 196/199), and 8842 (Fluke Model 8840A/8842A).

5. Confirm your selection by pressing ENTER. The multimeter returns to the measurement mode.

SCPI

Standard Commands for Programmable Instruments (SCPI) is fully supported by the GPIB and RS-232 interfaces. Always calibrate the Model 2000 multimeter using the SCPI language.

Keithley Models 196/199 Digital Multimeter

The Model 2000 multimeter implements virtually all commands available in the Keithley Models 196/199 digital multimeter, except for the self-test and calibration commands. The commands are listed in Appendix D.

See the Models 196/199 Digital Multimeter user manuals for more information about remote programming.

Fluke Model 8840A/8842A Digital Multimeter

The Model 2000 Multimeter implements virtually all commands available in the Fluke Models 8840A and 8842A digital multimeter, except for the self-test and calibration commands. The commands are listed in Appendix D.

See the Fluke user manual for more information about remote programming.

RS-232 operation

Sending and receiving data

The RS-232 interface transfers data using 8 data bits, 1 stop bit, and no parity. Make sure the controller you connect to the multimeter also uses these settings.

You can break data transmissions by sending a ^C or ^X character string to the multimeter. This clears any pending operation and discards any pending output.

Selecting baud rate

The baud rate is the rate at which the Model 2000 multimeter and the programming terminal communicate. Choose one these available rates:

- 19.2k
- 9600
- 4800
- 2400
- 1200
- 600
- 300

The factory selected baud rate is 4800.

When you choose a baud rate, make sure that the programming terminal that you are connecting to the Model 2000 multimeter can support the baud rate you selected. Both the multimeter and the other device must be configured for the same baud rate. To select a baud rate, follow these steps:

1. Access the RS-232 configuration by pressing SHIFT then RS232.

   You see: RS232: ON (assuming you have already selected the RS-232 interface)

2. Go to the baud rate field by pressing the ▼ key.

   You see `BAUD:<rate>`.

3. Access the baud rate list by pressing the ▶ key. You see the rate selection blinking.
4. Scroll through the available rates by pressing the ▼ and ▲ key until you find the rate you want.
5. Confirm your selection by pressing ENTER. The multimeter prompts you to define signal handshaking. Continue on for information about handshaking. You can return to measurement mode by pressing EXIT.

Selecting signal handshaking (flow control)

Signal handshaking between the controller and the instrument allows the two devices to communicate to each other regarding being ready or not ready to receive data. The Model 2000 does not support hardware handshaking (flow control).

Software flow control is in the form of X__ON and X__OFF characters and is enabled when XonXoFF is selected from the RS232 FLOW menu. When the input queue of the Model 2000 becomes more than 3/4 full, the instrument issues an X_OFF command. The control program should respond to this and stop sending characters until the Model 2000 issues the X_ON, which it will do once its input buffer has dropped below half-full. The Model 2000 recognizes X_ON and X_OFF sent from the controller. An X_OFF will cause the Model 2000 to stop outputting characters until it sees an X_ON. Incoming commands are processed after the <CR> character is received from the controller.

If NONE is the selected flow control, then there will be no signal handshaking between the controller and the Model 2000. Data will be lost if transmitted before the receiving device is ready.

Perform the following steps to set flow control:

1. Access the RS-232 configuration by pressing SHIFT and then RS232. You see: RS 232: ON (assuming you have already selected the RS-232 interface).
2. Go to the flow control field by using the ▲ or ▼ key. You see FLOW: <control>.
3. Access the flow control options by pressing the ▶ key. You see the flow control selection blinking.
4. Use the ▲ or ▼ key to display the desired flow control (NONE or XonXoFF) and press ENTER. You will then be prompted to set the terminator. Continue on for information about the terminator. You can return to the measurement mode by pressing EXIT.

Setting terminator

The Model 2000 can be configured to terminate each program message that it transmits to the controller with any combination of <CR> and <LF>. Perform the following steps to set the terminator:

1. Access the RS-232 configuration by pressing SHIFT and then RS232.

   You see: RS 232: ON (assuming you have already selected the RS-232 interface).
2. Go to the terminator field by using the ▲ or ▼ key.

   You see TX TERM: <terminator>.
3. Access the terminator options by pressing the ▶ key.

   You see the terminator selection blinking.
4. Use the ▲ or ▼ key to display the desired terminator (LF, CR or LFCR) and press ENTER. The instrument will return to the measurement mode.

RS-232 connections

The RS-232 serial port can be connected to the serial port of a controller (i.e., personal computer) using a straight through RS-232 cable terminated with DB-9 connectors. **Do not use a null modem cable**. The serial port uses the transmit (TXD), receive (RXD) and signal ground (GND) lines of the RS-232 standard. It does not use the hardware handshaking lines CTS and RTS. Figure 4-1 shows the rear panel connector for the RS-232 interface, and Table 4-2 shows the pinout for the connector.

If your computer uses a DB-25 connector for the RS-232 interface, you will need a cable or adapter with a DB-25 connector on one end and a DB-9 connector on the other, wired straight through (not null modem).

Figure 4-1
RS-232 interface connector

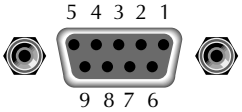

RS232
Rear Panel Connector

Table 4-2
RS-232 connector pinout

Pin number	Description
1	no connection
2	TXD, transmit data
3	RXD, receive data
4	no connection
5	GND, signal ground
6	no connection
7	CTS, clear to send[1]
8	RTS, ready to send[1]
9	no connection

[1]CTS and RTS signals are not used.

Error messages

See Appendix B for RS-232 error messages.

GPIB bus operation and reference

Introduction

This section contains information about connecting to and using the GPIB (IEEE-488) bus. The information is organized as follows:

- GPIB bus standards
- GPIB bus connections
- Selecting the primary address
- QuickBASIC 4.5 programming
- General bus commands
- Front panel GPIB operation

GPIB bus standards

The GPIB bus is the IEEE-488 instrumentation data bus with hardware and programming standards originally adopted by the IEEE (Institute of Electrical and Electronic Engineers) in 1975. The Model 2000 multimeter conforms to these standards:

- IEEE-488-1987.1
- IEEE-488-1987.2

This standard defines a syntax for sending data to and from instruments, how an instrument interprets this data, what registers should exist to record the state of the instrument, and a group of common commands.

- SCPI 1991 (Standard Commands for Programmable Instruments)

This standard defines a command language protocol. It goes one step farther than IEEE-488-1987.2 and defines a standard set of commands to control every programmable aspect of an instrument.

GPIB bus connections

To connect the Model 2000 multimeter to the GPIB bus, use a cable equipped with standard IEEE-488 connectors as shown in Figure 4-2.

Figure 4-2
IEEE-488 connector

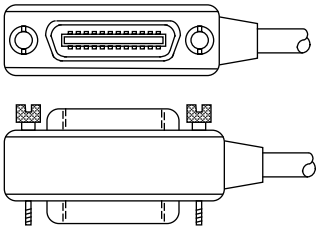

To allow many parallel connections to one instrument, stack the connector. Two screws are located on each connector to ensure that connections remain secure. Current standards call for metric threads, which are identified with dark-colored screws. Earlier versions had different screws, which were silver-colored. Do not use these types of connectors on the Model 2000 multimeter, because it is designed for metric threads.

Figure 4-3 shows a typical connecting scheme for a multi-unit test system.

Figure 4-3
IEEE-488 connections

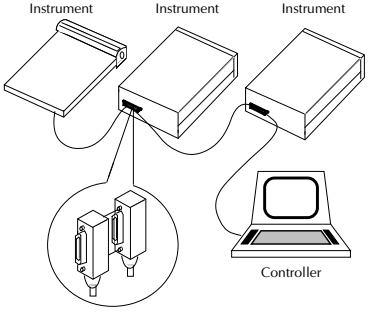

To avoid possible mechanical damage, stack no more than three connectors on any one unit.

NOTE *To minimize interference caused by electromagnetic radiation, use only shielded IEEE-488 cables. Available shielded cables from Keithley are models 7007-1 and 7007-2.*

To connect the Model 2000 multimeter to the IEEE-488 bus, follow these steps:

1. Line up the cable connector with the connector located on the rear panel. The connector is designed so that it will fit only one way. Figure 4-4 shows the location of the IEEE-488 connector.

Figure 4-4
IEEE-488 connector location

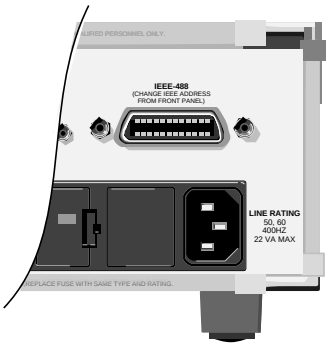

2. Tighten the screws securely, making sure not to over tighten them.
3. Connect any additional connectors from other instruments as required for your application.
4. Make certain that the other end of the cable is properly connected to the controller. Most controllers are equipped with an IEEE-488 style connector, but a few may require a different type of connecting cable. See your controllers instruction manual for information about properly connecting to the IEEE-488 bus.

NOTE *You can only have 15 devices connected to a IEEE-488 bus, including the controller. The maximum cable length is either 20- meters or two meters times the number of devices, whichever is less. Not observing these limits may cause erratic bus operation.*

Selecting the primary address

The Model 2000 multimeter ships from the factory with a GPIB address of 16. When the multimeter powers up, it momentarily displays the primary address. You can set the address to a value of 0-30. Do not assign the same address to another device or to a controller that are on the same GPIB bus.

Usually controller addresses are 0 or 21, but see the controllers instruction manual for details. Make certain that the address of the controller is the same as that specified in the controllers programming language.

To change the primary address, follow these steps:

1. Access the GPIB configuration settings by pressing SHIFT then GPIB.

   You see: `GPIB:ON`, with `GPIB` blinking
2. Go to Address choice by pressing the ▼ key.

   You see: `ADDR:16`
3. Go to the numeric field by pressing the ▶ key.
4. Enter a new address from 0-30 by using the ▲ and ▼; press ENTER.
5. Return to the main display by pressing EXIT.

QuickBASIC 4.5 programming

Programming examples are written in Microsoft QuickBASIC 4.5 using the Keithley KPC-488.2 (or Capital Equipment Corporation) IEEE interface and the HP-style Universal Language Driver (CECHP).

Install the universal language driver

Before any programming example can be run, the Universal Language Driver must first be installed. To install the driver, from the DOS prompt, enter this command:

```
cechp
```

If you include the CECHP command in your AUTOEXEC.BAT file, the driver will automatically be installed every time you turn on your computer.

About program fragments

Program fragments are used to demonstrate proper programming syntax. As the name implies, only a fragment of the whole program is used to avoid redundancy.

At the beginning of each program, driver files have to be opened. The input terminator should be set for CRLF. For example:

```
OPEN "ieee" FOR OUTPUT AS #1
OPEN "ieee" FOR INPUT AS #2
PRINT #1, "interm crlf"
```

A typical program fragment includes an OUTPUT command and an ENTER command. The OUTPUT command sends a program message (command string) to the Model 2000 multimeter. If the program message includes a query command, then the ENTER command is required to get the response message from the Model 2000 multimeter. The ENTER command addresses the Model 2000 multimeter to talk. The following example program fragment demonstrates how OUTPUT and ENTER commands are used. Note that the commands assume address 16, which is the factory-set address of the Model 2000 multimeter.

```
PRINT #1, "output 16; :func 'volt:ac'; func?"
PRINT #1, "enter 16"
```

If you wish to display the response message on the CRT, the computer will have to read the message and then “print” it to the CRT display as follows:

```
LINE INPUT #2, A$
PRINT A$
```

The following programming example shows how all the above statements are used together. The program fragment is shown in bold typeface.

```
OPEN "ieee" FOR OUTPUT AS #1          'Open driver
OPEN "ieee" FOR INPUT AS #2           'Open driver
PRINT #1, "interm crlf"               'CRLF terminator
PRINT #1, "output 16;:func 'volt:ac'; func?"
                                      'Select ACV and query
PRINT #1, "enter 16"                  'Get response message
LINE INPUT #2, A$                     'Read response message
PRINT A$                              'Display message
```

General Bus Commands

General Bus Commands and Associated Statements

General commands are those commands, such as DCL, that have the same general meaning regardless of the instrument. Table 4-3 lists the general bus commands along with the programming statement for each command, which use the Keithley KPC-488.2 IEEE interface and the HP- style Universal Language Driver. Note that the commands requiring that the primary address be specified assume that the address is the factory-set address of 16.

Table 4-3
General bus commands and associated statements

Command	Programming statement	Effect on Model 2000 Multimeter
REN	REMOTE 16	Goes into effect when next addressed to listen.
IFC	ABORT	Goes into talker and listener idle states.
LLO	LOCAL LOCKOUT	LOCAL key locked out.
GTL	LOCAL 16	Cancel remote; restore front panel operation for the 2000.
	LOCAL	Cancel remote; restore front panel operation for all devices.
DCL	CLEAR	Return all devices to known conditions.
SDC	CLEAR 16	Returns Model 2000 to known conditions.
GET	TRIGGER 16	Initiates a trigger.
SPE, SPD	SPOLL 16	Serial Polls the Model 2000.

REN (remote enable)

The remote enable command is sent to the Model 2000 by the controller to set up the instrument for remote operation. Generally, the instrument should be placed in the remote mode before you attempt to program it over the bus. Simply setting REN true does not actually place the instrument in the remote state. You must address the instrument to listen after setting REN true before it goes into remote.

Note that the instrument need not be in remote to be a talker.

Program fragment

```
PRINT #1, "remote 16"                 'Place the Model 2000 in remote;
                                       turn on REM annunciator
```

Note that all front panels controls except for LOCAL (and POWER) are inoperative while the instrument is in remote. You can restore normal front panel operation by pressing the LOCAL key.

IFC (interface clear)

The IFC command is sent by the controller to place the Model 2000 multimeter in the local, talker, listener idle states. The unit responds to the IFC command by canceling front panel TALK or LSTN lights, if the instrument was previously placed in one of those states.

Note that this command does not affect the status of the instrument; settings, data, and event registers are not changed.

To send the IFC command, the controller need only set the IFC line true for a minimum of 100µs.

Program fragment

```
PRINT #1, "output 16; *idn?"          'Send query command
PRINT #1, "enter 16"                  'Read data; turn on TALK annunci-
                                       ator
SLEEP 3                               'Wait 3 seconds
PRINT #1, "abort"                     'Talker idle state; turn off TALK
                                       annunciator
```

LLO (local lockout)

Use the LLO command to prevent local operation of the instrument. After the unit receives LLO, all its front panel controls except the POWER are inoperative. In this state, pressing the LOCAL will not restore control to the front panel. The GTL command restores control to the front panel.

Program fragment

```
PRINT #1, "remote 16"                 'Place 2000 in remote
PRINT #1, "local lockout"             'Lock out front panel (including
                                       LOCAL key)
SLEEP 6                               'Wait 6 seconds
PRINT #1, "local 16"                  'Restore front panel operation
```

GTL (go to local)

Use the GTL command to put a remote-mode instrument into local mode. The GTL command also restores front panel key operation.

Program fragment

```
PRINT #1, "remote 16"                 'Place 2000 in remote
SLEEP 3                               'Wait 3 seconds
PRINT #1, "local 16"                  'Place 2000 in local mode
```

DCL (device clear)

Use the DCL command to clear the GPIB interface and return it to a known state. Note that the DCL command is not an addressed command, so all instruments equipped to implement DCL will do so simultaneously.

When the Model 2000 multimeter receives a DCL command, it clears the Input Buffer and Output Queue, cancels deferred commands, and clears any command that prevents the processing of any other device command. A DCL does not affect instrument settings and stored data.

Program fragment

```
PRINT #1, "clear"                    'Clear all devices
```

SDC (selective device clear)

The SDC command is an addressed command that performs essentially the same function as the DCL command. However, since each device must be individually addressed, the SDC command provides a method to clear only selected instruments instead of clearing all instruments simultaneously, as is the case with DCL.

Program fragment

```
PRINT #1, "clear 16"                 'Clear 2000
```

GET (group execute trigger)

GET is a GPIB trigger that is used as an arm, scan and/or measure event to control operation. The Model 2000 multimeter reacts to this trigger if it is the programmed control source. The control source is programmed from the SCPI: TRIGger subsystem.

With the instrument programmed and waiting for a GPIB trigger, the following program fragment will provide the GET:

Program fragment

```
PRINT #1, "trigger 16"                'Trigger 2000 from over the bus
```

This sends IEEE-488 commands UNT UNL LISTEN 16 GET. When the command is executed, the trigger event occurs. (The command TRIGGER just sends GET. Any other listeners are triggered when the command is executed.)

SPE, SPD (serial polling)

Use the serial polling sequence to obtain the Model 2000 serial poll byte. The serial poll byte contains important information about internal functions, (see “status structure”). Generally, the serial polling sequence is used by the controller to determine which of several instruments has requested service with the SRQ line. However, the serial polling sequence may be performed at any time to obtain the status byte from the Model 2000 multimeter.

Program fragment

```
PRINT #1, "spoll 16"                  'Serial poll the 2000
INPUT #2, S                           'Read serial poll byte
PRINT S                               'Display the decimal value of the
                                       serial poll byte
```

Front panel GPIB operation

This section describes aspects of the front panel that are part of GPIB operation, including messages, status indicators, and the LOCAL key.

Error and status messages

See Section 2 for a list of error and status messages associated with IEEE-488 programming. The instrument can be programmed to generate an SRQ, and command queries can be performed to check for specific error conditions.

GPIB status indicators

The REM (remote), TALK (talk), LSTN (listen), and SRQ (service request) annunciators show the GPIB bus status. Each of these indicators is described below.

- REM — This indicator shows when the instrument is in the remote state. REM does not necessarily indicate the state of the REM line, as the instrument must be addressed to listen with REM true before the REM indicator turns on. When the instrument is in remote, all front panel keys, except for the LOCAL key, are locked out. When REM is turned off, the instrument is in the local state, and front panel operation is restored.
- TALK — This indicator is on when the instrument is in the talker active state. Place the unit in the talk state by addressing it to talk with the correct MTA (My Talk Address) command. TALK is off when the unit is in the talker idle state. Place the unit in the talker idle state by sending an UNT (Untalk) command, addressing it to listen, or sending the IFC (Interface Clear) command.
- LSTN — This indicator is on when the Model 2000 Multimeter is in the listener active state, which is activated by addressing the instrument to listen with the correct MLA (My Listen Address) command. LSTN is off when the unit is in the listener idle state. Place the unit in the listener idle state by sending UNL (Unlisten), addressing it to talk, or sending IFC (Interface Clear) command over the bus.
- SRQ — You can program the instrument to generate a service request (SRQ) when one or more errors or conditions occur. When this indicator is on, a service request has been generated. This indicator stays on until the serial poll byte is read or all the conditions that caused SRQ have ceased to exist. See “status structure” for more information.

LOCAL key

The LOCAL key cancels the remote state and restores local operation of the instrument.

Pressing the LOCAL key also turns off the REM indicator and returns the display to normal if a user-defined message was displayed.

If the LLO (Local Lockout) command is in effect, the LOCAL key is also inoperative.

Status structure

See Figure 4-5 for the Model 2000 Multimeters status structure. Instrument events, such as errors, are monitored and manipulated by four status register sets. Notice that these status register sets feed directly into the Status Byte Register. More detailed illustrations of these register sets are provided by Figures 4-5 through 4-9.

Figure 4-5
Model 2000 status register structure

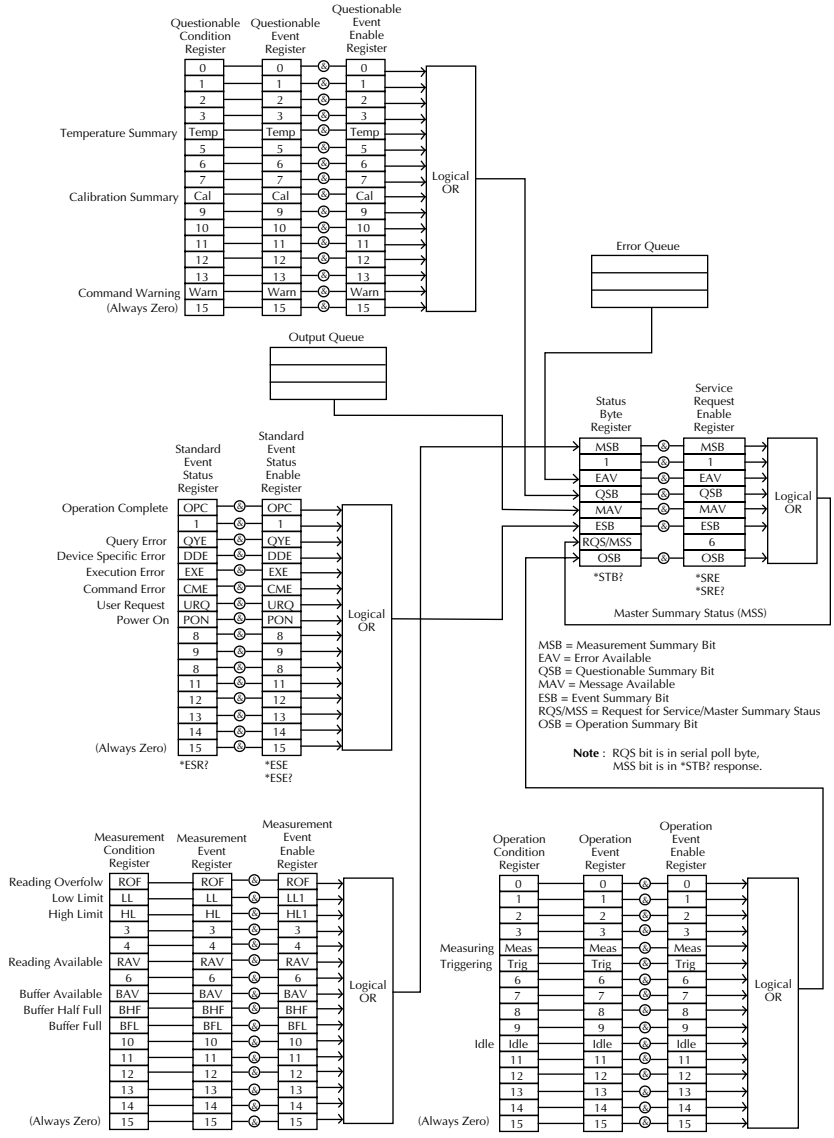

Condition registers

As Figure 4-5 shows, all status register sets have a condition register. A condition register is a real-time, read-only register that constantly updates to reflect the current operating conditions of the instrument. For example, while a measurement is being performed, bit B4 (Meas) of the Operation Condition Register is set. When the measurement is completed, bit B4 clears.

Use the :CONDition? query commands in the STATus Subsystem to read the condition registers. See Section 5 for more information.

Event registers

As Figure 4-5 shows, each status register set has an event register. An event register is a latched, read-only register whose bits are set by the corresponding condition register, Once a bit in an event register is set, it remains set (latched) until the register is cleared by a specific clearing operation. The bits of an event register are logically ANDed with the bits of the corresponding enable register and applied to an OR gate. The output of the OR gate is applied to the Status Byte Register.

Use the *ESR? Common Command to read the Standard Event Register. All other event registers are read using the :EVENt? query commands in the STATus Subsystem. See Section 5 for more information.

An event register is cleared when it is read. The following operations clear all event registers:

- Cycling power
- Sending *CLS

Enable registers

As Figure 4-5 shows, each status register set has an enable register. An enable register is programmed by you and serves as a mask for the corresponding event register. An event bit is masked when the corresponding bit in the enable register is cleared (0). When masked, a set bit in an event register cannot set a bit in the Status Byte Register (1 AND 0 = 0).

To use the Status Byte Register to detect events (i.e., serial poll), you must unmask the events by setting (1) the appropriate bits of the enable registers.

To program and query the Standard Event Status Register, use the *ESE and *ESE? Common Commands respectively. All other enable registers are programmed and queried using the :ENABle and :ENABLe? commands in the STATus Subsystem. See Section 5 for more information.

An enable register is not cleared when it is read. The following operations affect the enable registers:

- Cycling power - Clears all enable registers
- :STATus:PREset clears the following enable registers:
  Operation Event Enable Register
  Questionable Event Enable Register
  Measurement Event Enable Register
  *ESE 0 - Clears the Standard Event Status Enable Register.

Figure 4-6
Standard event status

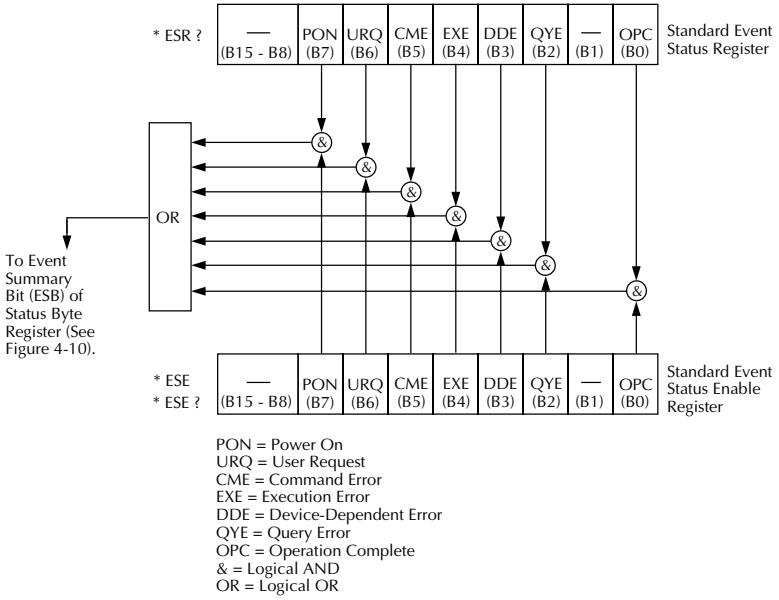

Figure 4-7
Operation event status

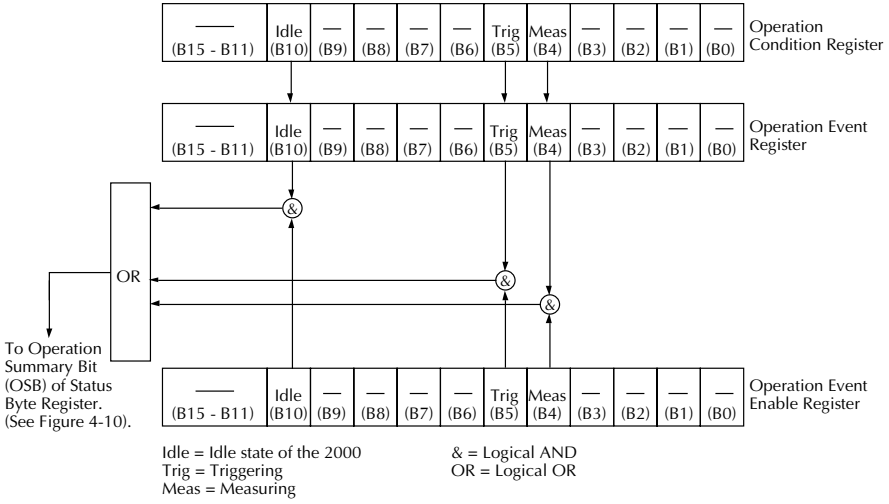

Figure 4-8
Measurement event status

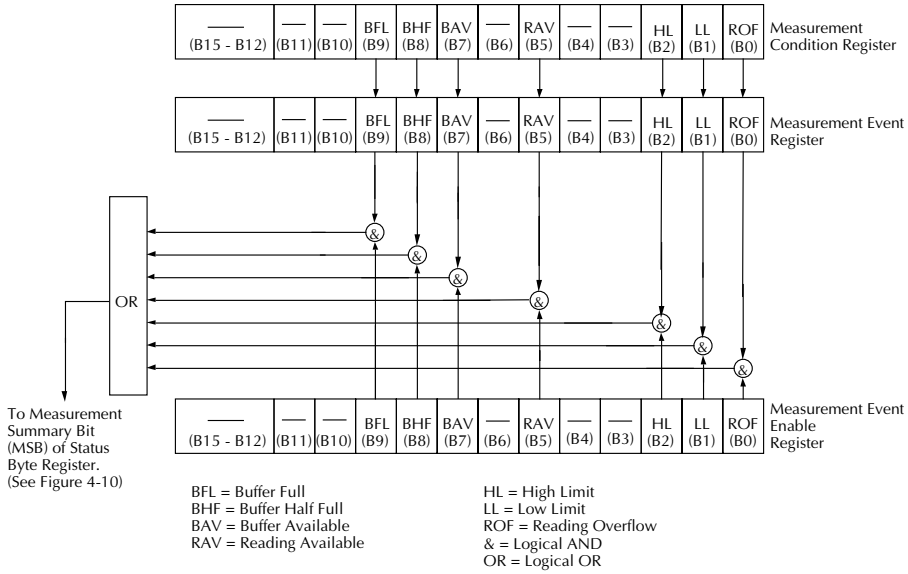

Figure 4-9
Questionable event status

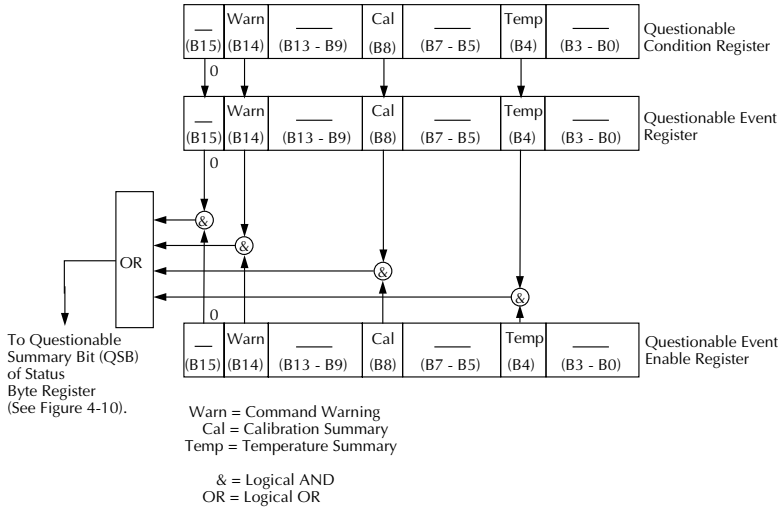

Queues

The Model 2000 uses two queues, which are first-in, first-out (FIFO) registers:

- Output Queue - used to hold reading and response messages
- Error Queue - used to hold error and status messages

The Model 2000 Multimeter status model (Figure 4-5) shows how the two queues are structured with the other registers.

Output queue

The output queue holds data that pertains to the normal operation of the instrument. For example, when a query command is sent, the response message is placed on the Output Queue.

When data is placed in the Output Queue, the Message Available (MAV) bit in the Status Byte Register sets. A data message is cleared from the Output Queue when it is read. The Output Queue is considered cleared when it is empty. An empty Output Queue clears the MAV bit in the Status Byte Register.

Read a message from the Output Queue by addressing the Model 2000 multimeter to talk after the appropriate query is sent.

Error queue

The Error Queue holds error and status messages. When an error or status event occurs, a message that defines the error/status is placed in the Error Queue. This queue will hold up to 10 messages.

When a message is placed in the Error Queue, the Error Available (EAV) bit in the Status Byte Register is set. An error message is cleared from the Error/Status Queue when it is read. The Error Queue is considered cleared when it is empty. An empty Error Queue clears the EAV bit in the Status Byte Register. Read an error message from the Error Queue by sending either of the following SCPI query commands and then addressing the Model 2000 to talk:

- :SYSTem:ERRor?
- :STATus:QUEue

See Section 5 for complete information about reading error messages.

Status Byte and Service Request (SRQ)

Service request is controlled by two 8-bit registers: the Status Byte Register and the Service Request Enable Register. Figure 4-10 shows the structure of these registers.

Figure 4-10
Status byte and service request (SRQ)

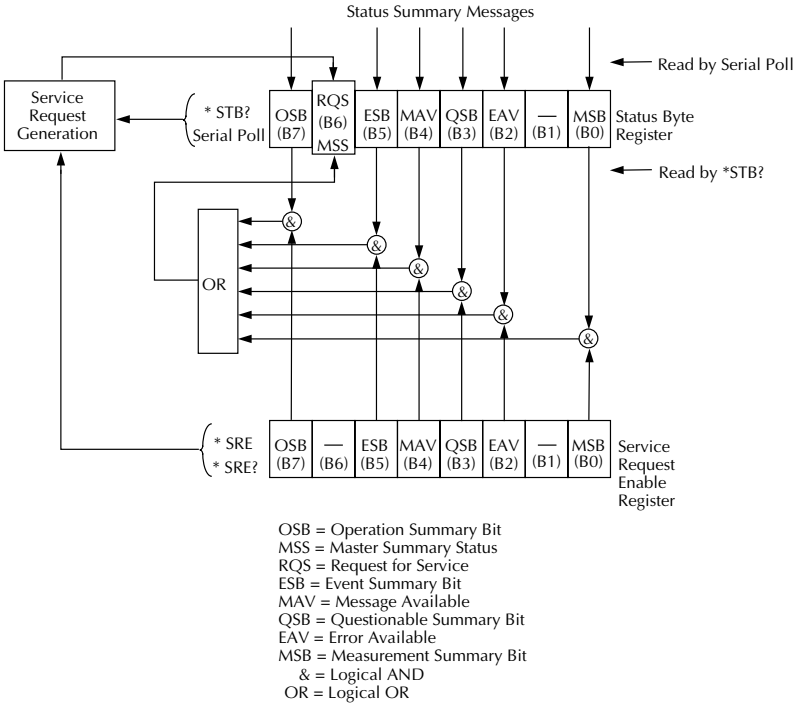

Status Byte Register

The summary messages from the status registers and queues are used to set or clear the appropriate bits (B0, B2, B3, B4, B5, and B7) of the Status Byte Register. These bits do not latch, and their states (0 or 1) are solely dependent on the summary messages (0 or 1). For example, if the Standard Event Status Register is read, its register will clear. As a result, its summary message will reset to 0, which in turn will clear the ESB bit in the Status Byte Register.

Bit B6 in the Status Byte Register is either:

- The Master Summary Status (MSS) bit, sent in response to the *STB? command, indicates the status of any set bits with corresponding enable bits set.
- The Request for Service (RQS) bit, sent in response to a serial poll, indicates which device was requesting service by pulling on the SRQ line.

For a description of the other bits in the Status Byte Register, see “Common commands, *STB?”

The IEEE-488.2 standard uses the following common query command to read the Status Byte Register: *STB?.

When reading the Status Byte Register using the *STB? command, bit B6 is called the MSS bit. None of the bits in the Status Byte Register are cleared when using the *STB? command to read it.

The IEEE-488.1 standard has a serial poll sequence that also reads the Status Byte Register and is better suited to detect a service request (SRQ). When using the serial poll, bit B6 is called the RQS bit. Serial polling causes bit B6 (RQS) to reset. Serial polling is discussed in more detail later in this section entitled “Serial Poll and SRQ.”

Any of the following operations clear all bits of the Status Byte Register:

- Cycling power.
- Sending the *CLS common command

Note: The MAV bit may or may not be cleared.

Service request enable register

This register is programmed by you and serves as a mask for the Status Summary Message bits (B0, B2, B3, B4, B5, and B7) of the Status Byte Register. When masked, a set summary bit in the Status Byte Register cannot set bit B6 (MSS/RQS) of the Status Byte Register. Conversely, when unmasked, a set summary bit in the Status Byte Register sets bit B6.

A Status Summary Message bit in the Status Byte Register is masked when the corresponding bit in the Service Request Enable Register is cleared (0). When the masked summary bit in the Status Byte Register sets, it is ANDed with the corresponding cleared bit in the Service Request Enable Register. The logic “1” output of the AND gate is applied to the input of the OR gate and, thus, sets the MSS/RQS bit in he Status Byte Register.

The individual bits of the Service Request Enable Register can be set or cleared by using the following common command: *SRE <NRf>

To read the Service Request Enable Register, use the *SRE? query command. The Service Request Enable Register clears when power is cycled or a parameter (n) value of zero is sent with the *SRE command *SRE 0).

Serial poll and SRQ

Any enabled event summary bit that goes from 0 to 1 will set RQS and generate a service request (SRQ). In your test program, you can periodically read the Status Byte Register to check if a service request (SRQ) has occurred and what caused it. If an SRQ occurs, the program can, for example, branch to an appropriate subroutine that will service the request. Typically, service requests (SRQs) are managed by the serial poll sequence of the Model 2000. If an SRQ does not occur, bit B6 (RQS) of the Status Byte Register will remain cleared and the program will simply proceed normally after the serial poll is performed. If an SRQ does occur, bit B6 of the Status Byte Register will set and the program can branch to a service subroutine when the SRQ is detected by the serial poll.

The serial poll automatically resets RQS of the Status Byte Register. This allows subsequent serial polls to monitor bit B6 for an SRQ occurrence generated by other event types. After a serial poll, the same event can cause another SRQ, even if the event register that caused the first SRQ has not been cleared.

A serial poll clears RQS but does not clear MSS. The MSS bit stays set until all Status Byte event summary bits are cleared.

The following QuickBASIC 4.5 program (using the KPC-488.2 interface and the CECHP driver) demonstrates how serial poll can be used to detect an SRQ:

```
CLS
OPEN "ieee" FOR OUTPUT AS #1
OPEN "ieee" FOR INPUT AS #2
PRINT #1, "output 16; *cls"           'Clear Status Byte Register
PRINT #1, "output 16; *ese 32         'Unmask command errors
PRINT #1, "output 16; *sre 32         'Unmask event summary message
PRINT #1, "output 16; *ese"           'Error - missing parameter
SLEEP 1
PRINT #1, "SPOLL 02"                  'Serial poll 2000
INPUT #2, S                           'Read Status Byte Register
S=S OR 191                            'OR register with a mask
IF S= 255 THEN
GOSUB srq                             'Go to subroutine to acknowledge
                                       SRQ
END IF
PRINT
END
srq:
PRINT "SRQ Has Occurred--RQS (bit B6) is set (1)"
RETURN
```

Trigger model (GPIB operation)

This section describes how the Model 2000 Multimeter operates over the GPIB bus. The flowchart in Figure 4-11 summarizes operation over the bus and is called the trigger model. It is called the trigger model because operation is controlled by SCPI commands from the Trigger subsystem (see Section 5 for more information). Key SCPI commands are included in the trigger model.

Figure 4-11
Trigger model (remote operation)

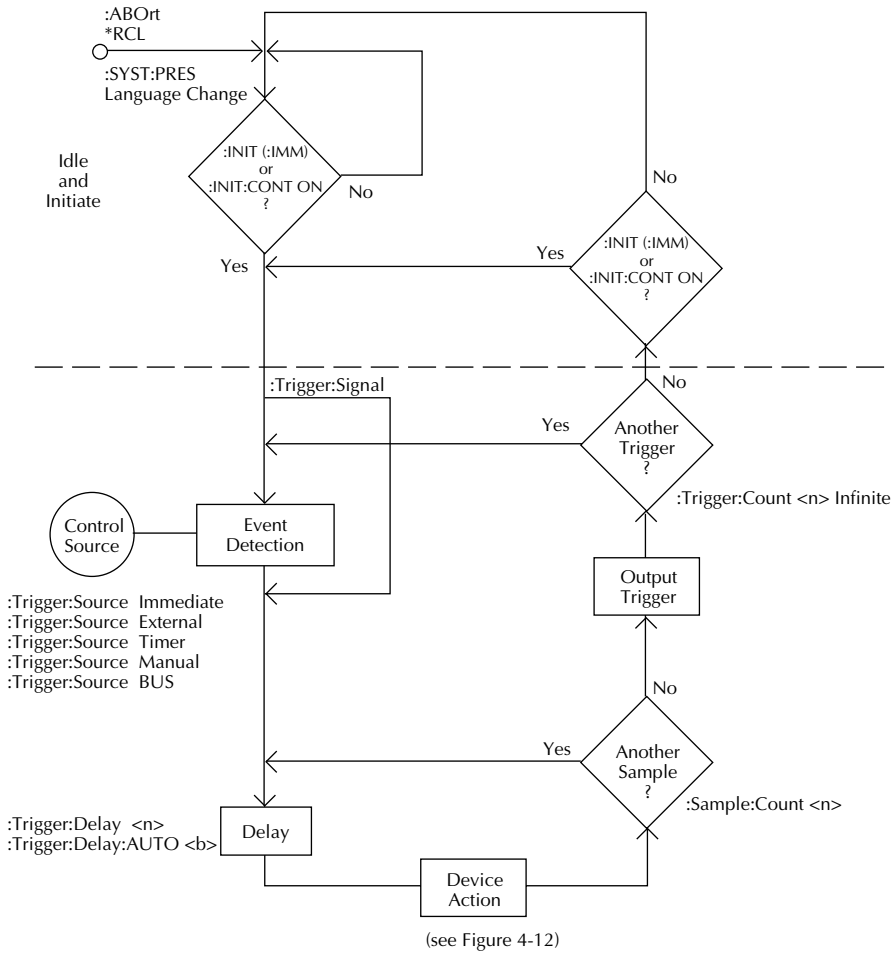

Idle and initiate

The instrument is considered to be in the idle state whenever it is not operating. While in the idle state, the instrument cannot perform any measure or scan functions. You can send two commands over the bus to remove the instrument from the idle state:

- :INITiate
- :INITiate:CONTinuous ON

With continuous initiation enabled (:INITiate:CONTinuous ON), the instrument will not remain in the idle state after all programmed operations are completed. However, you can return the instrument to the idle state at any time by sending any of these commands:

- *RST
- ABORt
- *RCL
- SYST:PRES

Trigger model operation

Once the instrument is taken out of idle, operation proceeds through the trigger model down to the device action. In general, the device action includes a measurement and, when scanning, closes the next channel.

Control Source — As shown in Figure 4-11, a control source is used to hold up operation until the programmed event occurs. The control source options are explained as follows:

- IMMediate — Event detection is immediately satisfied allowing operation to continue.
- MANual — Event detection is satisfied by pressing the TRIG key. The Model 2000 Multimeter must be in LOCAL mode for it to respond to the TRIG key. Press the LOCAL key or send LOCAL 16 over the bus to remove the instrument from the remote mode.
- TIMer — Event detection is immediately satisfied on the initial pass through the loop Each subsequent detection is satisfied when the programmed timer interval (0 to 999999.999) seconds elapses. The timer source is only available during step/scan operation. The timer resets to its initial state when the instrument goes into the normal mode of operation or into the idle state.
- EXTernal — Event detection is satisfied when an input trigger via the TRIGGER LINK connector is received by the Model 2000 Multimeter.
- BUS — Event detection is satisfied when a bus trigger (GET or *TRG) is received by the Model 2000 Multimeter.

Delay — A programmable delay is available after the event detection. The delay can be manually set from 0 to 999999.999 seconds, or Auto Delay can be used. With Auto Delay enabled, the instrument automatically selects a delay based on the selected function and range. See the Auto Delay table in Section 3 for delay times.

Auto Delay is typically used for scanning. The nominal delay will be just long enough to allow each relay to settle before making the measurement.

Device Action — Figure 4-12 provides a detailed look at the device action. If the repeat filter is enabled, then the instrument samples the specified number of reading conversions to yield a single filtered reading. If the moving filter is active, or filter is disabled, then only one reading conversion is performed.

Figure 4-12
Device action (trigger model)

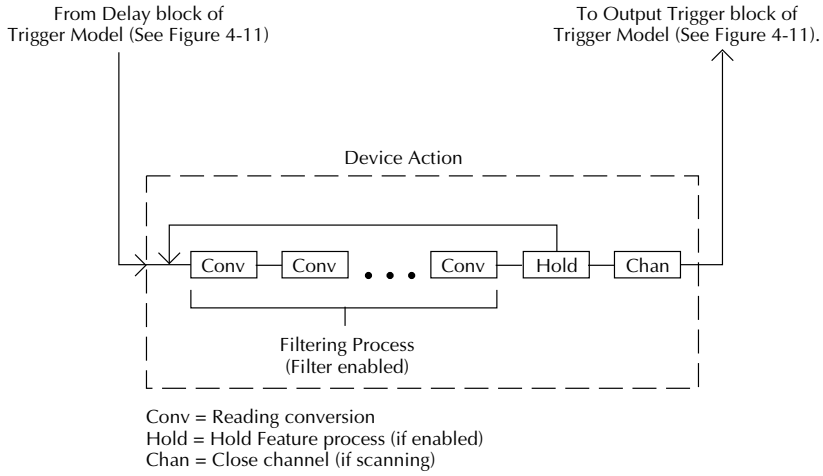

If the hold feature is enabled (see :HOLD commands in Section 5), then the first processed reading becomes the "seed" reading and operation loops back to the beginning of the device action. After the next reading is processed, it is compared to the programmed hold window (0.01% to 20%). If the reading is within the window, then operation again loops back to the beginning of the device action. This looping action continues until the specified number (2 to 100) of valid hold readings (readings within the window) have occurred. If one of the hold readings is not within the window, then the instrument acquires a new "seed" reading and repeats the hold process. After the hold is released, an audible beep is sounded to signal a valid measurement. The use of Hold is explained in Section 3.

If the instrument is performing a step or scan, then the next task for device action is to open the previous channel (if closed) and close the next channel.

If the filter, hold feature and scanning are disabled, the device action would simply be a single reading conversion.

Programming syntax

The information in this section covers syntax for both common commands and SCPI commands. For information not covered here, see the IEEE- 488.2 and SCPI standards.

Command words

Program messages are made up of one or more command words.

Commands and command parameters

Common commands and SCPI commands may or may not use a parameter. The following are some examples:

*SAV <NRf>	Parameter (NRf) required
*RST	No parameter used
:INITiate:CONTinuous <b>	Parameter <b> required
:SYSTem:PRESet	No parameter used.

Put at least one space between the command word and the parameter.

- Brackets [ ]: Some command words are enclosed in brackets ([ ]). These brackets are used to denote an optional command word that does not need to be included in the program message. For example:

  :INITiate[:IMMediate]

  These brackets indicate that :IMMediate is implied (optional) and does not have to used. Thus, the above command can be sent in one of two ways:

  :INTiate or :INTiate:IMMediate

  Notice that the optional command is used without the brackets. When using optional command words in your program, do not include the brackets.

- Parameter types: The following are some of the more common parameter types:

  <b> Boolean: Used to enable or disable an instrument operation. 0 or OFF disables the operation, and 1 or ON enables the operation. Example:

  :CURRent:AC:RANGe:AUTO ON Enable auto ranging

  <name> Name parameter: Select a parameter name from a listed group. Example:

  <name> = NEVer
  = NEXt

  :TRACe:FEED:CONTrol NEXt

  <NRf> Numeric representation format: This parameter is a number that can be expressed as an integer (e.g., 8) a real number (e.g., 23.6) or an exponent (2.3E6). Example:

  :SYSTem:KEY 16 Press TEMP key from over the bus

  <n> Numeric value: A numeric value parameter can consist of an NRf number or one of the following name parameters: DEFault, MINimum, MAXimum. When the DEFault parameter is used, the instrument is programmed to the *RST default value. When the MINimum parameter is used, the instrument is programmed to the lowest allowable value. When the MAXimum parameter is used, the instrument is programmed to the largest allowable value. Examples:

:TRIGger:TIMer	0.1	Sets timer to 100 msec.
:TRIGger:TIMer	DEFault	Sets timer to 0.1 sec.
:TRIGger:TIMer	MINimum	Sets timer to 1 msec.
:TRIGger:TIMer	MAXimum	Sets timer to 999999.999 sec.

  <list> List: Specify one or more switching channels. Examples:

  :ROUTe:SCAN (@1:10) Specify scan list (1-10).
  :ROUTe:SCAN (@2,4,6) Specify scan list (2, 4, and 6).

- Angle Brackets < >: Angle brackets (< >) are used to denote a parameter type. Do not include the brackets in the program message. For example:

  :HOLD:STATe <b>

  The <b> indicates that a Boolean-type parameter is required. Thus, to enable the Hold feature, you must send the command with the ON or 1 parameter as follows.

  :HOLD:STATe ON or 1

Query commands

This type of command requests (queries) the currently programmed status. It is identified by the question mark (?) at the end of the fundamental form of the command. Most commands have a query form, Example:

:TRIGger:TIMer?	Queries the timer interval.

Most command that require a numeric parameter(<n>) can also use the DEFault, MINimum, and MAXimum parameters for the query form. These query forms are used to determine the *RST default value and the upper and lower limits for the fundamental command. Examples:

:TRIGger:TIMer?	DEFault	Queries the *RST default value.
:TRIGger:TIMer?	MINimum	Queries the lowest allowable value.
:TRIGger:TIMer?	MAXimum	Queries the largest allowable value.

Case sensitivity

Common commands and SCPI commands are not case sensitive. You can use upper or lower case and any case combination. Examples:

*RST	=	*rst
:DATA?	=	:data?
:SYSTem:PRESet	=	:system:preset

Long-form and short-form versions

A SCPI command word can be sent in its long-form or short-form version. The command subsystem tables in Section 5 provide the in the long-form version. However, the short-form version is indicated by upper case characters. Examples:

:SYSTem:PRESet	long-form
:SYST:PRES	short form
:SYSTem:PRES	long-form and short-form combination

Note that each command word must be in long-form or short-form, and not something in between. For example, :SYSTe:PRESe is illegal and will generate an error. The command will not be executed.

Short-form rules

Use the following rules to determine the short-form version of any SCPI command:

- If the length of the command word is four letters or less, no short form version exists. Example:

  :auto = :auto

- These rules apply to command words that exceed four letters:
- If the fourth letter of the command word is a vowel, delete it and all the letters after it. Example

  :immediate = :imm

- Rule exception-The short form version of the following command uses only the first two letters of the word:

  :TCouple = :tc

- If the fourth letter of the command word is a consonant, retain it but drop all the letters after it. Example:

  :format = :form

- If the command contains a question mark (?; query) or a non- optional number included in the command word, you must include it in the short-form version. Example:

  :delay? = :del?

- Command words or characters that are enclosed in brackets ([ ]) are optional and need not be included in the program message.

Program messages

A program message is made up of one or more command words sent by the computer to the instrument. Each common command is simply a three letter acronym preceded by an asterisk (*). SCPI commands are categorized in the :STATus subsystem and are used to help explain how command words are structured to formulate program messages.

```
:STATus                 Path (Root)
   :OPERation              Path
      :ENABle <NRf>           Command and parameter
      :ENABle?                Query command
   :PRESet                 Command
```

Single command messages

The above command structure has three levels. The first level is made up of the root command (:STATus) and serves as a path. The second level is made up of another path (:OPERation) and a command (:PRESet). The third path is made up of one command for the :OPERation path. The three commands in this structure can be executed by sending three separate program messages as follows:

```
:stat:oper:enab <NRf>
:stat:oper:enab?
:stat:pres
```

In each of the above program messages, the path pointer starts at the root command (:stat) and moves down the command levels until the command is executed.

Multiple command messages

You can send multiple command messages in the same program message as long as they are separated by semicolons (;). Here is an example showing two commands in one program message:

```
:stat:oper; :stat:oper:enab <NRf>
```

When the above is sent, the first command word is recognized as the root command (:stat). When the next colon is detected, the path pointer moves down to the next command level and executes the command. When the path pointer sees the colon after the semicolon (;), it resets back to the root level and starts over.

Commands that are on the same command level can be executed without having to retype the entire command path. Example:

```
:stat:oper:enab <NRf>; enab?
```

After the first command (:enab) is executed, the path pointer is at the third command level in the structure. Since :enab? is also on the third level, it can be typed in without repeating the entire path name. Notice that the leading colon for :enab? is not included in the program message. If a colon were included, the path pointer would reset to the root level and expect a root command. Since :enab? is not a root command, an error would occur.

Command path rules

- Each new program message must begin with the root command, unless it is optional (e.g., [:SENSe]). If the root is optional, simply treat a command word on the next level as the root.
- The colon (:) at the beginning of a program message is optional and need not be used. Example:

  :stat:pres = stat:pres

- When the path pointer detects a colon (:) it moves down to the next command level. An exception is when the path pointer detects a semicolon (;), which is used to separate commands within the program message (see next rule).
- When the path pointer detects a colon (:) that immediately follows a semicolon (;), it resets back to the root level.
- The path pointer can only move down. It cannot be moved up a level. Executing a command at a higher level requires that you start over at the root command.

Using common commands and SCPI commands in the same message

Both common commands and SCPI commands can be used in the same message as long as they are separated by semicolons (;). A common command can be executed at any command level and will not affect the path pointer. Example:

:stat:oper:enab <NRf>; *ESE <NRf>

Program message terminator (PMT)

Each program message must be terminated with an LF (line feed), EOI (end or identify), or an LF+EOI. The bus will hang if your computer does not provide this termination. The following example shows how a multiple command program message must be terminated:

:rout:open:all; scan (@1:5) <PMT>

Command execution rules

- Commands execute in the order that they are presented in the program message.
- An invalid command generates an error and, of course, is not executed.
- Valid commands that precede an invalid command in a multiple command program message are executed.
- Valid commands that follow an invalid command in a multiple command program message are ignored.

Response messages

A response message is the message sent by the instrument to the computer in response to a query command program message.

Sending a response message

After sending a query command, the response message is placed in the Output Queue. When the Model 2000 Multimeter is then addressed to talk, the response message is sent from the Output Queue to the computer.

Multiple response messages

If you send more than one query command in the same program message (see the paragraph entitled, “Multiple Command Messages”), the multiple response messages for all the queries is sent to the computer when the Model 2000 is addressed to talk. The responses are sent in the order that the query commands were sent and are separated by semicolons (;). Items within the same query are separated by commas (,). The following example shows the response message for a program message that contains four single item query commands:

0; 1; 1; 0

Response message terminator (RMT)

Each response is terminated with an LF (line feed) and EOI (end or identify). The following example shows how a multiple response message is terminated:

0; 1; 1; 0; <RMT>

Message exchange protocol

Two rules summarize the message exchange protocol:

Rule 1. You must always tell the Model 2000 what to send to the computer.

The following two steps must always be performed to send information from the instrument other computer:

1. Send the appropriate query command(s) in a program message.
2. Address the Model 2000 to talk.

Rule 2. The complete response message must be received by the computer before another program message can be sent to the Model 2000.

Common Commands

Common commands (summarized in Table 4-4) are device commands that are common to all devices on the bus. These commands are designated and defined by the IEEE-488.2 standard.

Table 4-4
IEEE-488.2 common commands and queries

Mnemonic	Name	Description
*CLS	Clear status	Clears all event registers and Error Queue.
*ESE <NRf>	Event enable command	Program the Standard Event Enable Register.
*ESE?	Event enable query	Read the Standard Event Enable Register.
*ESR?	Event status register query	Read the Standard Event Enable Register and clear it.
*IDN?	Identification query	Returns the manufacturer, model number, serial number and firmware revision levels of the unit.
*OPC	Operation complete command	Set the Operation Complete bit in the Standard Event Status Register after all pending commands have been executed.
*OPC?	Operation complete query	Places an ASCII “1” into the output queue when all pending selected device operations have been completed.
*OPT?	Option identification query	Returns an ID code that indicates which memory option is installed and whether or not the optional scanner card is installed.
*RCL <NRf>	Recall command	Returns the Model 2000 to the setup configuration stored in the specified memory location.
*RST	Reset command	Returned the Model 2000 to the *RST default conditions.
*SAV <NRf>	Save command	Saves the current setup to the specified memory location.
*SRE <NRf>	Service request enable command	Programs the Service Request Enable Register.
*SRE?	Service request enable query	Reads the Service Request Enable Register.
*STB	Read status byte query	Reads the Status Byte Register.
*TRG	Trigger command	Sends a bus trigger to the 2000.
*TST?	Self-test query	Performs a checksum test on ROM and returns the result.
*WAI	Wait-to-continue command	Wait until all previous commands are executed.

*CLS — Clear Status

Clear status registers and error queue

Description

Use the *CLS command to clear (reset to 0) the bits of the following registers in the Model 2000:

- Standard Event Register
- Operation Even Register
- Error Queue
- Measurement Event Register
- Questionable Event Register

This command also forces the instrument into the operation complete command idle state and operation complete query idle state.

*ESE <NRf> — Event Enable

Program the standard event enable register

*ESE? — Event Enable Query

Read the standard event register

Parameters

<NRf> =	0	Clear register
	1	Set OPC (B0)
	4	Set QYE (B2)
	8	Set DDE (B3)
	16	Set EXE (B4)
	32	Set CME (B5)
	64	Set URQ (B6)
	128	Set PON (B7)
	255	Set all bits

Description

Use the *ESE command to program the Standard Event Enable Register. This command is sent with the decimal equivalent of the binary value that determines the desired state (0 or 1) of the bits in the register. This register is cleared on power-up.

This register is used as a mask for the Standard Event Register. When a standard event is masked, the occurrence of that event will not set the Event Summary Bit (ESB) in the Status Byte Register. Conversely, when a standard event is unmasked (enabled), the occurrence of that event sets the ESB bit. For information on the Standard Event Register and descriptions of the standard event bits see the next section.

A cleared bit (0) in the enabled register prevents (masks) the ESB bit in the Status Byte Register from setting when the corresponding standard event occurs. A set bit (1) in the enable register allows (enables) the ESB bit to set when the corresponding standard event occurs.

The Standard Event Enable Register is shown in Figure 4-13 and includes the decimal weight of each bit. The sum of the decimal weights of the bits that you wish to be set is the parameter value that is sent with the *ESE command. For example, to set the CME and QYE bits of the Standard Event Enable Register, send the following command:

*ESE 36

Where:	CME (bit B5) = Decimal	32
	QYE (bit B2) = Decimal	4
	<NRf> =	36

If a command error (CME) occurs, bit B5 of the Standard Event Status Register sets. If a query error (QYE) occurs, bit B2 of the Standard Event Status Register sets. Since both of these events are unmasked (enabled) the occurrence of any one of them causes the ESB bit in the Status Byte Register to set.

Read the Standard Event Status Register using the *ESE? query command.

Figure 4-13
Standard event enable register

Bit Position	B7	B6	B5	B4	B3	B2	B1	B0
Event	PON	URQ	CME	EXE	DDE	QYE	—	OPC
Decimal Weighting	128 (2^7)	64 (2^6)	32 (2^5)	16 (2^4)	8 (2^3)	4 (2^2)	—	1 (2^0)
Value	0/1	0/1	0/1	0/1	0/1	0/1	—	0/1

Note : Bits B8 through B15 are not shown since they are not used.

Value : 1 = Enable Standard Event
0 = Disable (Mask) Standard Event

Events : PON = Power On
URQ = User Request
CME = Command Error
EXE = Execution Error
DDE = Device-dependent Error
QYE = Query Error
OPC = Operation Complete

*ESR? — Event Status Register Query

Read the standard event status register and clear it

Description

Use this command to acquire the value (in decimal) of the Standard Event Register (see Figure 4-14). The binary equivalent of the returned decimal value determines which bits in the register are set. The register is cleared on power-up or when *CLS is sent.

A set bit in this register indicates that a particular event has occurred. For example, for an acquired decimal value of 48, the binary equivalent is 00110000. From this binary value, bits B4 and B5 of the Standard Event Status Register are set. These bits indicate that a device-dependent error and command error have occurred.

The bits of the Standard Event Status Register are described as follows:

- Bit B0, Operation Complete — A set bit indicates that all pending selected device operations are completed and the Model 2000 is ready to accept new commands. This bit only sets in response to the *OPC? query command.
- Bit B1 — Not used
- Bit B2, Query Error (QYE) — A set bit indicates that you attempted to read data from an empty Output Queue.
- Bit B3, Device-dependent Error (DDE) — A set bit indicates that an instrument operation did not execute properly due to some internal condition.
- Bit B4, Execution Error (EXE) — A set bit indicates that the Model 2000 detected an error while trying to execute a command.
- Bit B5, Command Error (CME) — A set bit indicates that a command error has occurred. Command errors include:
- IEEE-488.2 syntax error: Model 2000 received a message that does not follow the defined syntax of the IEEE-488.2 standard.
- Semantic error: Model 2000 received a command that was misspelled, or received an optional IEEE-488.2 command that is not implemented.
- The instrument received a Group Execute Trigger (GET) inside a program message.
- Bit B6, User Request (URQ) — A set bit indicates that the LOCAL key on the Model 2000 front panel was pressed.
- Bit B7, Power ON (PON) — A set bit indicates that the Model 2000 has been turned off and turned back on since the last time this register has been read.

Figure 4-14
Standard event status regster

Bit Position	B7	B6	B5	B4	B3	B2	B1	B0
Event	PON	URQ	CME	EXE	DDE	QYE	—	OPC
Decimal Weighting	128 (2^7)	64 (2^6)	32 (2^5)	16 (2^4)	8 (2^3)	4 (2^2)	—	1 (2^0)
Value	0/1	0/1	0/1	0/1	0/1	0/1	—	0/1

Note : Bits B8 through B15 are not shown since they are not used.

Value : 1 = Event Bit Set
0 = Event Bit Cleared

Events : PON = Power On
URQ = User Request
CME = Command Error
EXE = Execution Error
DDE = Device-dependent Error
QYE = Query Error
OPC = Operation Complete

*IDN? — Identification Query **Read the identification code**

Description

The identification code includes the manufacturer, model number, serial number, and firmware revision levels, and is sent in the following format:

KEITHLEY INSTRUMENTS INC., MODEL 2000, xxxxxxx, yyyyy/zzzzz

Where: xxxxxxx is the serial number
yyyyy/zzzzz is the firmware revision levels of the digital board ROM and display board ROM.

*OPC — Operation Complete

Set the OPC bit in the standard event status register after all pending commands are complete

Description

On power-up or when the *CLS or *RST is executed, the Model 2000 goes into the Operation Complete Command Idle State (OCIS). In this state, no pending overlapped commands exist. The Model 2000 has three overlapped commands:

- :INITiate
- :INITiate:CONTinuous ON
- *TRG

When you send the *OPC command, the Model 2000 exits from OCIS and enters the Operation Complete Command Active State (OCAS). In OCAS, the instrument continuously monitors the No-Operation-Pending flag. After the last pending overlapped command is completed (No-Operation- Pending flag set to true), the Operation Complete (OPC) bit in the Standard Event Status Register sets, and the instrument goes back into OCIS.

Note that the instrument always goes into OCAS when *OPC is executed. If no pending command operations are present (e.g. trigger model in idle state), the Model 2000 immediately sets the OPC bit and returns to OCIS.

When used with the :INITiate or :INITiate:CONTinuous ON command, the OPC bit of the Standard Event Status Register will not set until the Model 2000 goes back into the idle state. The initiate operations are not considered finished until the instrument goes into idle.

When used with the *TRG command, the OPC bit will not set until the operations associated with the *TRG command (and the initiate command) are finished. The *TRG command is considered to be finished when the Device Action completes or when operation stops a control source to wait for an event (see Trigger Model in this section).

To use the *OPC exclusively with the *TRG command, first force the completion of the initiate command so that only the *TRG command is pending. Do this by sending the :ABORt command to place the instrument in idle, which (by definition) completes the initiate command. Since continuous initiation is on, operation continues on into the Trigger Model. After sending the *TRG command, the OPC bit sets when the *TRG command is finished.

Program Fragment

```
GOSUB Read Register                    'Clear register by reading it
PRINT #1, "output 16; :init            'Place 2000 in idle
:cont off; :abort"
PRINT #1, "output 16; :init;*opc"      'Start measurements and send *OPC
SLEEP 2                                'Wait two seconds
GOSUB ReadRegister                     'Read register to show that OPC is
                                        not set
PRINT #1, "output 16; :abort"          'Place 2000 back in idle
GOSUB ReadRegister                     'Read register to show that OPC is
                                        now set
END
ReadRegister:
PRINT #1, "output 16; *esr?"           'Query Standard Event Status Reg-
                                        ister
PRINT #1, "enter 16"                   'Get response message from 2000
LINE INPUT #2, a$                      'Read decimal value of register
PRINT a$
RETURN
```

*OPC? — Operation Complete Query

Place a "1" in the output queue after all pending operations are completed

Description

On power-up or when the *CLS or *RST is executed, the Model 2000 goes into the Operation Complete Command Query Idle State (OQIS). In this state, no pending overlapped commands exist. The Model 2000 has three overlapped commands:

- :INITiate
- :INITiate:CONTinuous ON
- *TRG

When you send the *OPC? command, the Model 2000 exits from OQIS and enters the Operation Complete Command Query Active State (OQAS). In OQAS, the instrument continuously monitors the No-Operation-Pending flag. After the last pending overlapped command is completed (No- Operation-Pending flag set to true), an ASCII character "1" is placed into the Output Queue, the Message Available (MAV) bit in the Status Byte sets, and the instrument goes back into OQIS. Addressing the Model 2000 to talk sends the ASCII "1" to the computer.

Note that the instrument always goes into OQAS when *OPC? is executed. If no pending command operations are present (e.g. trigger model in idle state), the Model 2000 immediately places an ASCII "1" in the Output Queue, sets the MAV bit and returns to OQIS.

When used with the :INITiate or :INITiate:CONTinuous ON command, an ASCII "1" will not be sent to the Output Queue and the MAV bit will not set until the Model 2000 goes back into the idle state. The initiate operations are not considered finished until the instrument goes into the idle state.

When used with the *TRG command, an ASCII "1" will not be placed into the Output Queue and the MAV bit will not set until the operations associated with the *TRG command (and the initiate command) are finished. The *TRG command is considered to be finished when the Device Action completes or when operation stops at a control source to wait for an event (see the Trigger Model in this section).

To use *OPC? exclusively with the *TRG command, first force the completion of the initiate command so that only the *TRG command is pending. To do this, send the :ABORt command to place the instrument in idle, which (by definition) completes the initiate command. Since continuous initiation is on, operation continues on into the Trigger Model. After sending the *TRG command, an ASCII "1" is placed in the Output Queue and the MAV bit sets when the *TRG command is finished.

After *OPC? is executed, additional commands cannot be sent to the Model 2000 until the pending overlapped commands are finished. For example, :INITiate:CONTinuous ON followed by *OPC? locks up the instrument and requires a device clear (DCL or SDC) before it will accept any more commands.

Note: See *OPC, *TRG and *WAI for more information.

Program Fragment

```
PRINT #1, "output 16; :syst:pres"     'Select defaults
PRINT #1, "output 16; :init:cont off;:abort"
                                      'Place 2000 in idle
PRINT #1, "output 16; :trig:coun 1; sour tim"
PRINT #1, "output 16; :samp:coun 5"   'Program for 5 measurements and
                                       stop (idle)
PRINT #1, "output 16; :init; *opc?"   'Start measurements and send
                                       *opc?
PRINT #1, "enter 16"                  'Get response when 2000 goes into
                                       idle
LINE INPUT #2, a$                     'Read contents of Output Queue
PRINT a$                              'Display the ASCII "1"
```

*OPT? — Option Identification Query

Determine if an option is installed

Description

The response message indicates the presence or absence of an optional scanner card. For example:

0	No scanner card installed
200X-SCAN	Scanner card installed

*RCL — Recall

Return to setup stored in memory

Parameters

<NRf>=0

Description

Use this command to return the Model 2000 to the configuration stored in memory. The *SAV command is used to store the setup configuration in memory location.

Only one setup configuration can be saved and recalled.

The Model 2000 ships from the factory with :SYSTen:PRESet defaults loaded into the available setup memory. If a recall error occurs, the setup memory defaults to the :SYSTem:PRESet values.

*RST — RESET

Return 2000 to *RST defaults

Description

When the *RST command is sent, the Model 2000 performs the following operations:

1. Returns the Model 2000 to the *RST default conditions (see SCPI tables).
2. Cancels all pending commands.
3. Cancels response to any previously received *OPC and *OPC? commands.

*SAV — Save

Save present setup in memory

Parameters

<NRf>=0

Description

Use the *SAVE command to save the current instrument setup configuration in memory for later recall. Any control affected by *RST can be saved by the *SAV command. The *RCL command is used to restore the instrument to the saved setup configuration.

Only one setup configuration can be saved and recalled.

*SRE <NRf> — Service Request Enable

Program service request enable register

*SRE? — Service Request Enable Query

Read service request enable register

Parameters

<NRf>=	0	Clears enable register
	1	Set MSB bit (Bit 0)
	4	Set EAV bit (Bit 2)
	8	Set QSB bit (Bit 3)
	16	Set MAV bit (Bit 4)
	32	Set ESB (Bit 5)
	128	Set OSB (Bit 7)
	255	Set all bits

Description

Use the *SRE command to program the Service Request Enable Register. Send this command with the decimal equivalent of the binary value that determines the desired state (0 or 1) of each bit in the register. This register is cleared on power-up.

This enable register is used along with the Status Byte Register to generate service requests (SRQ). With a bit in the Service Request Enable Register set, an SRQ occurs when the corre-

sponding bit in the Status Byte Register is set by an appropriate event. For more information on register structure, see the information presented earlier in this section.

The Service Request Enable Register is shown in Figure 4-15. Notice that the decimal weight of each bit is included in the illustration. The sum of the decimal weights of the bits that you wish to set is the value that is sent with the *SRE command. For example, to set the ESB and MAV bits of the Service Request Enable Register, send the following command:

*SRE 48

Where:	ESB (bit B5) = Decimal	32
	MAV(bit B4) = Decimal	16
	<NRf> =	48

The contents of the Service Request Enable Register can be read using the *SRE? query command.

Figure 4-15
Service request enable register

Bit Position	B7	B6	B5	B4	B3	B2	B1	B0
Event	OSB	—	ESB	MAV	QSB	EAV	—	MSB
Decimal Weighting	128 (2^7)	—	32 (2^5)	16 (2^4)	8 (2^3)	4 (2^2)	—	1 (2^0)
Value	0/1	—	0/1	0/1	0/1	0/1	—	0/1

Value : 1 = Enable Service Request Event
0 = Disable (Mask) Service Request Event

Events : OSB = Operation Summary Bit
ESB = Event Summary Bit
MAV = Message Available
QSB = Questionable Summary Bit
EAV = Error Available
MSB = Measurement Summary Bit

*STB? — Status Byte Query

Read status byte register

Description

Use the *STB? query command to acquire the value (in decimal) of the Status Byte Register. The Status Byte Register is shown in Figure 4-16. The binary equivalent of the decimal value determines which bits in the register are set.

All bits, except Bit B6, in this register are set by other event registers and queues. Bit 6 sets when one or more enabled conditions occur.

The *STB? query command does not clear the status byte register. This register can only be cleared by clearing the related registers and queues. See “status structure” for details.

For example, for an acquired decimal value of 48, the binary equivalent is 00110000. This binary value indicates that bits 4 and 5 if the Status Byte Register are set.

The bits of the Status Byte Register are described as follows:

- Bit 0, Measurement Status (MSB)-A set bit indicates that a measurement event has occurred. The event can be identified by reading the Measurement Event Status Register using the :STATus:MEASurement? command (see Section 5 for details).
- Bit 1-Not used.
- Bit 2, Error Available (EAV)-A set bit indicates that an error or status message is present in the Error Queue. The message can be read using one of the following SCPI commands:

  :SYSTem:ERRor?
  :STATus:QUEue?

  See Section 5 for more information.

- Bit 3, Questionable Summary Bit (QSB)-A set bit indicates that a calibration error has occurred.
- Bit 4, Message Available (MAV)-A set bit indicates that a message is present in the Output Queue. The message is sent to the computer when the Model 2000 is addressed to talk.
- Bit 5, Event Summary Bit (ESB)-A set bit indicates that an enabled standard event has occurred. The event can be identified by reading the Standard Event Status Register using the *ESE? query command.
- Bit 6, Master Summary Status (MSS)/Request Service (RQS)-A set bit indicates that one or more enabled Status Byte conditions have occurred. Read the MSS bit by using the STB? query command, or perform a serial poll to detect the occurrence of a service request (RQS bit set).
- Bit 7, Operation Summary (OSB)-A set bit indicates that an enabled operation event has occurred. The event can be identified by reading the Operation Event Status Register using the :STATus:OPERation? query command (see Section 5 for details).

Figure 4-16
Status byte register

Bit Position	B7	B6	B5	B4	B3	B2	B1	B0
Event	OSB	MSS, RQS	ESB	MAV	QSB	EAV	—	MSB
Decimal Weighting	128 (2^7)	64 (2^6)	32 (2^5)	16 (2^4)	8 (2^3)	4 (2^2)	—	1 (2^0)
Value	0/1	0/1	0/1	0/1	0/1	0/1	—	0/1

Value : 1 = Event Bit Set
0 = Event Bit Cleared

Events : OSB = Operation Summary Bit
MSS = Master Summary Status
RQS = Request Service
ESB = Event Summary Bit
MAV = Message Available
QSB = Questionable Summary Bit
EAV = Error Available
MSB = Measurement Summary Bit

*TRG — Trigger Send bus trigger to 2000

Description

Use the *TRG command to issue a GPIB trigger to the Model 2000. It has the same effect as a group execute trigger (GET).

Use the *TRG command as an event to control operation. The Model 2000 reacts to this trigger if BUS is the programmed control source. The control source is programmed from the TRIGger subsystem (see Section 5).

*TST?-Self-Test Query Run self test and read result

Description

Use this query command to perform a checksum test on ROM. The command places the coded result (0 or 1) in the Output Queue. When the Model 2000 is addressed to talk, the coded result is sent from the Output Queue to the computer.

A returned value of zero (0) indicates that the test passed, and a value of one (1) indicates that the test has failed.

*WAI — Wait-to-Continue Prevent execution of commands until previous commands are completed

Description

Two types of device commands exist:

- Sequential commands-A command whose operations are allowed to finish before the next command is executed.
- Overlapped commands-A command that allows the execution of subsequent commands while device operations of the Overlapped command are still in progress.

Use the *WAI command to suspend the execution of subsequent commands until the device operations of all previous Overlapped commands are finished. The *WAI command is not needed for Sequential commands.

The Model 2000 has three overlapped commands:

- :INITiate
- :INITiate:CONTinuous ON
- *TRG

Note: See *OPC, *OPC? and *TRG for more information.

The :INITiate commands remove the Model 2000 from the idle state. The device operations of :INITiate are not considered complete until the Model 2000 returns to idle. By sending the *WAI command after the :INITiate command, all subsequent commands will not execute until the Model 2000 goes back into idle.

The *TRG command issues a bus trigger that could be used to provide the arm, scan, and measure events for the Trigger Model. By sending the *WAI command after the *TRG command, subsequent commands will not executed until the pointer for the Trigger Model has finished moving in response to *TRG and has settled at its next state.

Program Fragment

```
PRINT #1, "output 02; :syst:pres"     'Select defaults
PRINT #1, "output 02; :init:cont off;:abort"
                                      'Place 2000 in idle
PRINT #1, "output 02; :trig:coun 1;sour tim"
                                      'Program for 30 measurements and
                                      'then stop (idle)
PRINT #1, "output 02; :samp:coun 30"
PRINT #1, "output 02;:init; *wai"     'Start measurements and send *wai
PRINT #1, "output 02; :data?"         'Query a reading
PRINT #1, "enter 02"                  'Get reading after 2000 goes into
                                       idle
LINE INPUT #2, a$                     'Read the reading
PRINT a$                              'Display the reading
```

5
SCPI Command Reference

This section contains reference information on programming the Model 2000 with the SCPI commands. It is organized as follows:

SCPI Signal Oriented Measurement Commands — Covers the signal oriented measurement commands. These commands are used to acquire readings.

SCPI command subsystems reference tables — Includes a summary table for each SCPI subsystem command.

SCPI command subsystems — Includes additional information on each SCPI subsystem command.

SCPI Signal oriented measurement commands

The signal oriented measurement commands are used to acquire readings. You can use these high-level instructions to control the measurement process. These commands are summarized in Table 5-1.

Table 5-1
Signal oriented measurement command summary

Command	Description
:CONFigure:<function>	Places the Model 2000 in a "one-shot" measurement mode for the specified function.
:FETCh?	Requests the latest reading without triggering.
:READ?	Performs an :ABORt, :INITiate, and a :FETCh?.
MEASure[:<function>]?	Performs an :ABORt, :CONFigure:<function>, and a :READ?.

CONFigure Command

:CONFigure:<function>

<function> =	CURRent:AC	AC current
	CURRent[:DC]	DC current
	VOLTage:AC	AC voltage
	VOLTage[:DC]	DC voltage
	RESistance	2-wire resistance
	FRESistance	4-wire resistance
	PERiod	Period
	FREQuency	Frequency
	TEMPerature	Temperature
	DIODe	Diode testing
	CONTinuity	Continuity test

Query :CONFigure? Query the selected function.

Description This command configures the instrument for subsequent measurements on the specified function. Basically, this command places the instrument in a "one-shot" measurement mode. You then use the :READ? command to trigger a measurement and acquire a reading (see :READ?).

When this command is sent, the Model 2000 will be configured as follows:

- The function specified by this command is selected.
- All controls related to the selected function are defaulted to the *RST values.
- Continuous initiation is disabled (:INITiate:CONTinuous OFF).

- The control source of the Trigger Model is set to Immediate.
- The count values of the Trigger Model are set to one.
- The delay of the Trigger Model is set to zero.
- The Model 2000 is placed in the idle state.
- All math calculations are disabled.
- Buffer operation is disabled. A storage operation currently in process will be aborted.
- Autozero is set to the *RST default value.
- All operations associated with switching cards (scanning) are disabled.

This command is automatically asserted when the :MEASure? command is sent.

Program

```
PRINT #1, "output 16; :conf:volt:dc"    'Perform :CONFigure operations.
```

FETCh? command

:FETCh?

Description

This query command requests the latest post- processed reading. After sending this command and addressing the Model 2000 to talk, the reading is sent to the computer. This command does not affect the instrument setup.

This command does not trigger a measurement. The command simply requests the last available reading. Note that this command can repeatedly return the same reading. Until there is a new reading, this command continues to return the old reading. If your application requires a "fresh" reading, use the :DATA:FRESh? command (see the SENSe Subsystem command).

This command is automatically asserted when the :READ? or :MEASure? command is sent.

NOTE *If external rapid triggers are applied, the unit may not return readings when using :FETCh?*

READ? command

:READ?

Description Typically, this command is used with the instrument in the “one-shot” measurement mode to trigger and acquire a specified number of readings. The :SAMPle:COUNt command is used to specify the number of readings (see Trigger Subsystem). Note that the readings are stored in the buffer.

When this command is sent, the following commands execute in the order that they are presented:

:ABORt
:INITiate
:FETCh?

When :ABORt is executed, if continuous initiation is disabled, the instrument goes into the idle state. If continuous initiation is enabled, the operation re-starts at the beginning of the Trigger Model.

If the instrument is in the idle state, :INITiate takes the instrument out of the idle state. If continuous initiation is enabled, (:INITiate:CONTinuous ON), then the :INITiate command generates an error and ignores the command.

See the :FETCh? command for more details. Note that an “Init ignored” error will not cancel the execution of the :FETCh? command.

NOTE *You cannot use the :READ? command if sample count >1 (see Trigger Subsystem) and there are readings stored in the buffer (error -225, out of memory). Either set sample count to one or clear the buffer.*

See Appendix C for an example program using the READ? command.

MEASure command

:MEASure[:<function>]?

<function> =	CURRent:AC	AC current
	CURRent[:DC]	DC current
	VOLTage:AC	AC voltage
	VOLTage[:DC]	DC voltage
	RESistance	2-wire resistance
	FRESistance	4-wire resistance
	PERiod	Period
	FREQuency	Frequency
	TEMPerature	Temperature
	DIODe	Diode testing
	CONTinuity	Continuity test

Description

This command combines all of the other signal oriented measurement commands to perform a “one-shot” measurement and acquire the reading.

When this command is sent, the following commands execute in the order that they are presented.

:ABORt:CONFigure:<function>:READ?

When :ABORt is executed, if continuous initiation is disabled, the instrument goes into the idle state. If continuous initiation is enabled, the operation re-starts at the beginning of the Trigger Model.

When :CONFigure is executed, the instrument goes into a “one-shot” measurement mode. See :CONFigure for more details.

When :READ? is executed, its operations will then be performed. In general, another :ABORt is performed, then an :INITiate, and finally a FETCh? to acquire the reading. See :READ? for more details.

SCPI command subsystems reference tables

Tables 5-2 through 5-11 summarize the commands for each SCPI subsystem. The following list includes the SCPI subsystem commands and the table number where each command is summarized.

CALCulate command summary (Table 5-2)
DISPlay command summary (Table 5-3)
FORMat command summary (Table 5-4)
ROUTe command summary (Table 5-5)
SENSe command summary (Table 5-6)
STATus command summary (Table 5-7)
SYSTem command summary (Table 5-8)
TRACe command summary (Table 5-9)
Trigger command summary (Table 5-10)
UNIT command summary (Table 5-11)

General notes:

- Brackets ([ ]) are used to denote optional character sets. These optional characters do not have to be included in the program message. Do not use brackets in the program message.
- Angle brackets (< >) are used to indicate parameter type. Do not use angle brackets in the program message.
- The Boolean parameter (<b>) is used to enable or disable an instrument operation. 1 or ON enables the operation and 0 or OFF disables the operation.
- Upper case characters indicate the short-form version for each command word.
- Default Parameter — Listed parameters are both the *RST and :SYSTem:PRESet defaults, unless noted otherwise. Parameter notes are located at the end of each table.
- SCPI — A checkmark (√) indicates that the command and its parameters are SCPI confirmed. An unmarked command indicates that it is non-SCPI. SCPI confirmed commands that use one or more non-SCPI parameters are explained by notes.

Table 5-2
CALCulate command summary

Command	Description	Default parameter	SCPI
:CALCulate[1]	Subsystem to control CALC 1:		√
:FORMat <name>	Select math format (NONE, MXB, PERCent).	PERCent	√
:FORMat?	Query math format.		√
:KMATh	Path to configure math calculations:		√
:MMFactor <NRf>	Set “m” factor for mx+b (-100e6 to 100e6).	1	
:MMFactor?	Query “m” factor.		
:MBFactor <NRf>	Set “b” factor for mx+b (-100e6 to 100e6).	0	
:MBFactor?	Query “b” factor.		
:MUNits <name>	Specify units for mx+b reading (three characters ‘A’ through ‘Z’).	MXB	
:MUNits?	Query “mx+b” units.		
:PERCent <NRf>	Set target value for PERCent calculation (-100e6 to 100e6).	1	
:ACQuire	Use input signal as target value.		
:PERCent?	Query percent.		
:STATe <b>	Enable or disable kmath calculation.	(Note)	
:STATe?	Query state of kmath function.		
:DATA?	Read result of kmath calculation.		
:CALCulate2	Subsystem to control CALC 2:		√
:FORMat <name>	Select math format: (MEAN, SDEViation, MAXimum, MINimum, or NONE).	NONE	√
:FORMat?	Query math format.		√
:STATe <b>	Enable or disable calculation.	(Note)	√
:STATe?	Query state of math function.		√
:IMMediate	Recalculate raw input data in buffer.		√
:IMMediate?	Perform calculation and read result.		√
:DATA?	Read math result of CALC 2.		√
:CALCulate3	Subsystem to control CALC 3 (limit test):		√
:LIMit[1]	Path to control LIMIT 1 test:		√
:UPPer	Path to configure upper limit:		√
[:DATA] <n>	Set upper limit (-100e6 to 100e6).	1	√
[:DATA]?	Query upper limit.		√
:LOWer	Path to configure lower limit:		√
[:DATA] <n>	Set lower limit (-100e6 to 100e6).	-1	√
[:DATA]?	Query lower limit.		√
:STATe <b>	Enable or disable limit test.	OFF	√
:STATe?	Query state of limit test.		√
:FAIL?	Query test result (1 = pass, 0 = fail).		√
:CLEAR	Path to clear failed test:		√
[:IMMediate]	Clear failed test indication.		√
:AUTO <b>	Enable or disable auto clear.	ON	√
:AUTO?	Query auto clear.		√
:IMMediate	Re-perform limit tests.		√

*Note: ON is the *RST default parameter, and OFF is the :SYSTem:PRESet default.

Table 5-3
DISPlay command summary

Command	Description	Default parameter	SCPI
:DISPlay			
[:WINDow[1]]			√
:TEXT	Path to control user text messages.	(Note 1)	√
:DATA <a>	Define ASCII message “a” (up to 12 characters).		√
:DATA?	Query text message.		√
:STATe <b>	Enable or disable message mode.	(Note 2)	√
:STATe?	Query text message state.		√
:ENABle <b>	Enable or disable the front panel display.	(Note 3)	√
:ENABle?	Query state of the display.		√

Notes:
1. *RST and :SYSTem:PRESet has no effect on a user defined message. Cycling power cancels all user defined messages.
2. *RST and :SYSTem:PRESet has no effect on the state of the message mode. Cycling power disables (OFF) the message mode.
3. *RST and :SYSTem:PRESet has no effect on the display circuitry. Cycling power enables (ON) the display circuitry.

Table 5-4
FORMat command summary

Command	Description	Default parameter	SCPI
:FORMat			
[:DATA] <type>[,<length>]	Select data format: (ASCii, SREal or DREal).	ASCii	√
[:DATA]?	Query data format.		√
:ELEMents <item list>	Specify data elements: (READing, CHANnel, and UNITs).	READing	
:ELEMents?	Query data elements.		
:BORDer <name>	Select binary byte order: (NORMal or SWAPped).	SWAPped	√
:BORDer?	Query byte order.		√

Table 5-5
ROUTe command summary

Command	Description	Default parameter	SCPI
ROUTe	Commands to control scanner card:		
:CLOSe <chan num>	Close specified channel (1 to 10) or channel pair (1 to 5).		
:STATe?	Query closed channel (or channel pair).		
:OPEN:ALL	Open all input channels (1 through 10).		
:MULTiple	Path to close and open multiple channels:		
:CLOSe <list>	Close specified channels (1 to 11).		
:STATe?	Query closed channel.		
:OPEN <list>	Open specified channels (1 to 11).		
:SCAN	Path to scan channels.		√
[:INTernal] <list>	Specify internal scan list (2 to 10 channels).	1-10	√
[:INTernal]?	Query internal scan list.		√
:EXTernal <list>	Specify external scan list (2 to 800 channels).	1-10	
:EXTernal?	Query external scan list.		
:LSELect <name>	Select scan operation (INTernal, EXTernal, or NONE).	NONE	
:LSELect?	Query scan operation.		

Table 5-6
SENSe command summary

Command	Description	Default parameter	SCPI
[:SENSe[1]]			
:FUNCtion <name>	Select measurement function: ‘VOLTage:AC’, VOLTage :DC’, RESistance’, ‘FRESistance’, ‘CURRent:AC’, ‘CURRent: DC’ , ‘FREQuency’,‘TEMPerature’, ‘PERiod’, ‘DIODe’, “CONTinuity’.	‘VOLT[:DC]’	√
:FUNCtion?	Query function.		√
:DATA?	Return the last instrument reading.		√
:HOLD	Path to control Hold feature:		
:WINDow <NRf>	Set Hold window (%); 0.01 to 20.	1	
:WINDow?	Query Hold window.		
:COUNt <NRf>	Set Hold count; 2 to 100.	5	
:COUNt?	Query Hold count.		
:STATe <NRf>	Enable or disable Hold.	OFF	
:STATe?	Query state of Hold.		

Table 5-6(cont.)
SENSe command summary

Command	Description	Default parameter	SCPI
:CURRent:AC	Path to configure AC current.		√
:NPLCycles <n>	Set integration rate (line cycles; 0.01 to 10).	1	√
:NPLCycles?	Query line cycle integration rate.		√
:RANGe	Path to configure measurement range:		√
[:UPPer] <n>	Select range (0 to 3.1).	3	√
[:UPPer]?	Query range.		√
:AUTO <b>	Enable or disable auto range.	ON	√
:AUTO?	Query auto range.		√
:REFerence <n>	Specify reference (-3.1 to 3.1).	0	√
:STATe <b>	Enable or disable reference.	OFF	√
:STATe?	Query state of reference.		√
:ACQuire	Use input signal as reference.		
:REFerence?	Query reference value.		√
:DIGits <n>	Specify measurement resolution (4 to 7).	6	
:DIGits?	Query resolution.		
:AVERage	Path to configure and control the filter.		
:TCONtrol <name>	Select filter type: (MOVing or REPeat).	(Note)	
:TCONtrol?	Query filter type.		
:COUNt <n>	Specify filter count (1 to 100).		
:COUNt?	Query filter count.	10	
:STATe <b>	Enable or disable filter.	OFF	
:STATe?	Query state of digital filter.		
:DETector	Path to configure bandwidth:		
:BANDwidth <NRf>	Specify bandwidth (3 to 300e3).	30	
:BANDwidth?	Query bandwidth.		
:CURRent:DC	Path to configure DC current.		√
:NPLCycles <n>	Set integration rate (line cycles; 0.01 to 10).	1	√
:NPLCycles?	Query line cycle integration rate.		√
:RANGe	Path to configure measurement range:		√
[:UPPer] <n>	Select range (0 to 3.1).	3	√
[:UPPer]?	Query range.		√
:AUTO <b>	Enable or disable auto range.	ON	√
:AUTO?	Query auto range.		√
:REFerence <n>	Specify reference (-3.1 to 3.1).	0	√
:STATe <b>	Enable or disable reference.	OFF	√
:STATe?	Query state of reference.		√
:ACQuire	Use input signal as reference.		
:REFerence?	Query reference value.		√
:DIGits <n>	Specify measurement resolution (4 to 7).	7	
:DIGits?	Query resolution.		
:AVERage	Path to configure and control the filter.		
:TCONtrol <name>	Select filter type: (MOVing or REPeat).	(Note)	
:TCONtrol?	Query filter type.		
:COUNt <n>	Specify filter count (1 to 100).	10	
:COUNt?	Query filter count.		
:STATe <b>	Enable or disable filter.	OFF	
:STATe?	Query state of digital filter.		

Table 5-6(cont.)
SENSe command summary

Command	Description	Default parameter	SCPI
:VOLTage:AC	Path to configure AC voltage.		√
:NPLCycles <n>	Set integration rate (line cycles; 0.01 to 10).	1	√
:NPLCycles?	Query line cycle integration rate.		√
:RANGe	Path to configure measurement range:		√
[:UPPer] <n>	Select range (0 to 757.5).	757.5	√
[:UPPer]?	Query range.		√
:AUTO <b>	Enable or disable auto range.	ON	√
:AUTO?	Query auto range.		√
:REFerence <n>	Specify reference (-757.5 to 757.5).	0	√
:STATe <b>	Enable or disable reference.	OFF	√
:STATe?	Query state of reference.		√
:ACQuire	Use input signal as reference.		
:REFerence?	Query reference value.		√
:DIGits <n>	Specify measurement resolution (4 to 7).	6	
:DIGits?	Query resolution.		
:AVERage	Path to configure and control the filter.		
:TCONtrol <name>	Select filter type: (MOVing or REPeat).	(Note)	
:TCONtrol?	Query filter type.		
:COUNt <n>	Specify filter count (1 to 100).	10	
:COUNt?	Query filter count.		
:STATe <b>	Enable or disable filter.		
:STATe?	Query state of digital filter.	OFF	
:DETector	Path to configure bandwidth:		
:BANDwidth <NRf>	Specify bandwidth (3 to 300e3).	30	
:BANDwidth?	Query bandwidth.		
:VOLTage:DC	Path to configure DC voltage:		√
:NPLCycles <n>	Set integration rate (line cycles; (0.01 to 10).	1	√
:NPLCycles?	Query line cycle integration rate.		√
:RANGe	Path to configure measurement range:		√
[:UPPer] <n>	Select range (0 to 1010).	1000	√
[:UPPer]?	Query range.		√
:AUTO <b>	Enable or disable auto range.	ON	√
:AUTO?	Query auto range.		√
:REFerence <n>	Specify reference (-1010 to +1010).	0	√
:STATe <b>	Enable or disable reference.	OFF	√
:STATe?	Query state of reference (0 or 1).		√
:ACQuire	Use input signal as reference.		
:REFerence?	Query reference value.		√
:DIGits <n>	Specify measurement resolution (4 to 7).	7	
:DIGits?	Query resolution.		
:AVERage	Path to configure and control the filter.		
:TCONtrol <name>	Select filter type: (MOVing or REPeat).	(Note)	
:TCONtrol?	Query filter type.		
:COUNt <n>	Specify filter count (1 to 100).	10	
:COUNt?	Query filter count.		
:STATe <b>	Enable or disable filter.	OFF	
:STATe?	Query state of digital filter.		

Table 5-6(cont.)
SENSe command summary

Command	Description	Default parameter	SCPI
:RESistance	Path to configure resistance:		√
:NPLCycles <n>	Set integration rate (line cycles; 0.01 to 10).	1	√
:NPLCycles?	Query line cycle integration rate.		√
:RANGe	Path to configure measurement range:		√
[:UPPer] <n>	Select range (0 to 120e6).	100e6	√
[:UPPer]?	Query range.		√
:AUTO <b>	Enable or disable auto range.	ON	√
:AUTO?	Query auto range.		√
:REFerence <n>	Specify reference (0 to 120e6).	0	√
:STATe <b>	Enable or disable reference.	OFF	√
:STATe?	Query state of reference.		√
:ACQuire	Use input signal as reference.		
:REFerence?	Query reference value.		√
:DIGits <n>	Specify measurement resolution (4 to 7).	7	
:DIGits?	Query resolution.		
:AVERage	Path to configure and control filter.		
:TCONtrol <name>	Select filter type: (MOVing or REPeat).	(Note)	
:TCONtrol?	Query filter type.		
:COUNt <n>	Specify filter count (1 to 100).	10	
:COUNt?	Query filter count.		
:STATe <b>	Enable or disable filter.	OFF	
:STATe?	Query state of digital filter.		
:FRESistance	Path to configure four-wire resistance:		√
:NPLCycles <n>	Set integration rate (line cycles; 0.01 to 10).	1	√
:NPLCycles?	Query line cycle integration rate.		√
:RANGe	Path to configure measurement range:		√
[:UPPer] <n>	Select range (0 to 101e6).	100e6	√
[:UPPer]?	Query range.		√
:AUTO <b>	Enable or disable auto range.	ON	√
:AUTO?	Query auto range.		√
:REFerence <n>	Specify reference (0 to +101e6).	0	√
:STATe <b>	Enable or disable reference.	OFF	√
:STATe?	Query state of reference.		√
:ACQuire	Use input signal as reference.		
:REFerence?	Query reference value.		√
:DIGits <n>	Specify measurement resolution (4 to 7).	7	
:DIGits?	Query resolution.		
:AVERage	Path to configure and control filter.		
:TCONtrol <name>	Select filter type: (MOVing or REPeat).	(Note)	
:TCONtrol?	Query filter type.		
:COUNt <n>	Specify filter count (1 to 100).	10	
:COUNt?	Query filter count.		
:STATe <b>	Enable or disable filter.	OFF	
:STATe?	Query state of digital filter.		

Table 5-6(cont.)
SENSe command summary

Command	Description	Default parameter	SCPI
:TEMPerature	Path to configure temperature:		
:NPLCycles <n>	Set integration rate (line cycles; 0.01 to 10).	1	
:NPLCycles?	Query line cycle integration rate.		
:REFerence <n>	Specify reference; -200 to 1372	0	
:STATe <b>	Enable or disable reference.	OFF	
:STATe?	Query state of reference.		
:ACQuire	Use input signal as reference.		
:REFerence?	Query reference value.		
:DIGits <n>	Specify measurement resolution (4 to 7).	6	
:DIGits?	Query resolution.		
:AVERage	Path to configure and control the filter.		
:TCONtrol <name>	Select filter type: (MOVing or REPeat).	(Note)	
:TCONtrol?	Query filter type.		
:COUNt <n>	Specify filter count (1 to 100).	10	
:COUNt?	Query filter count.		
:STATe <b>	Enable or disable filter.	OFF	
:STATe?	Query state of digital filter.		
:TCouple	Path to configure thermocouple:		
:TYPE <name>	Select thermocouple type (J, K, or T).	J	
:TYPE?	Query thermocouple type.		
:RJUNction	Path to configure reference junction:		
:RSELect <name>	Select reference type (SIMulated or REAL).	SIMulated	
:RSELect?	Query reference type.		
:SIMulated <n>	Specify simulated temperature in °C (0 to 50).	23°C	
:SIMulated?	Query simulated temperature.		
:REAL	Path to configure real reference junction:		
:TCOefficient <n>	Specify temp coefficient (-0.09999 to 0.09999).	2e-4	
:TCOefficient?	Query temp coefficient.		
:OFFSET <n>	Specify voltage offset at 0°C (-0.09999 to 0.09999).	5.463e-2	
:OFFSet?	Query voltage offset.		
:FREQuency	Path to configure frequency.		
:APERture	Sets gate time for period measurements (0.01-1.0s).		
:APERture?	Query period gate time.		
:THReshold	Path to select the threshold voltage range:		√
:VOLTage			√
:RANGe <n>	Select threshold range (0 to 1010).	10	
:RANGe?	Query threshold range.		
:REFerence <n>	Specify reference (0 to 1.5e7)	0	
:STATe <b>	Enable or disable reference.	OFF	
:STATe?	Query state of reference.		
:ACQuire	Use input signal as reference.		
:REFerence?	Query reference value.		
:DIGits <n>	Specify measurement resoltuion (4 to 7).	7	
:DIGits?	Query resolution.		

Table 5-6(cont.)
SENSe command summary

Command	Description	Default parameter	SCPI
:PERiod	Path to configure period.		
:APERture	Sets gate time for period measurements (0.01-1.0s).		
:APERture?	Query period gate time.		
:THReshold	Path to select the threshold voltage range:		
:VOLTage			
:RANGe <n>	Select threshold range (0 to 1010).	10	
:RANGe?	Query threshold range.		
:REFerence <n>	Specify reference (0 to 1).	0	
:STATe <b>	Enable or disable reference.	OFF	
:STATe?	Query state of reference.		
:ACQuire	Use input signal as reference.		
:REFerence?	Query reference value.		
:DIGits <n>	Specify measurement resolution (4 to 7).	7	
:DIGits?	Query resolution.		
:DIODe	Paths to configure diode test:		
:CURRent			
:RANGe	Path to select range.		
[:UPPer] <NRf>	Select range (0 to 1e-3)	1e-3	
[:UPPer]?	Query range.		
:CONTinuity	Path to configure continuity test:		
:THReshold <NRf>	Set threshold resistance (1 to 1000).	10	
:THReshold?	Query threshold resistance.		

Note: REPeat is the *RST default and MOVing is the :SYSTem:PRESet default.

Table 5-7
STATus command summary

Command	Description	Default parameter	SCPI
:STATus		(Note 1)	√
:MEASurement	Path to control measurement event registers:		
[:EVENt]?	Read the event register.	(Note 2)	
:ENABle <NRf>	Program the enable register.	(Note 3)	
:ENABle?	Read the enable register.		
:CONDition?	Read the condition register.		
:OPERation	Path to control operation status registers:		√
[:EVENt]?	Read the event register.	(Note 2)	√
:ENABle <NRf>	Program the enable register.	(Note 3)	√
:ENABle?	Read the enable register.		√
:CONDition?	Read the condition register.		√
:QUEStionable	Path to control questionable status registers:		√
[:EVENt]?	Read the event register.	(Note 2)	√
:ENABle <NRf>	Program the enable register.	(Note 3)	√
:ENABle?	Read the enable register.		√
:CONDition?	Read the condition register.		√
:PRESet	Return status registers to default states.		√
:QUEue	Path to access error queue:		√
[:NEXT]?	Read the most recent error message.	(Note 4)	√
:ENABle <list>	Specify error and status messages for queue.	(Note 5)	√
:ENABle?	Read the enabled messages.		√
:DISable <list>	Specify messages not to be placed in queue.	(Note 5)	
:DISable?	Read the disabled messages.		
:CLEar	Clears all messages from Error Queue.		

Notes:

1. Commands in this subsystem are not affected by *RST and :SYSTem:PRESet. The effects of cycling power, *CLS and :STATus:PRESet are explained by the following notes.
2. Event Registers: Power-up and *CLS – Clears all bits of the registers
   :STATus:PRESet – No effect.
3. Enable Registers: Power-up and :STATus:PRESet – Clears all bits of the registers
   *CLS – No effect
4. Error Queue: Power-up and *CLS – Clears the Error Queue
   :STATus:PRESet – No effect
5. Enable/Disable Error Queue Messages: Power-up – Clears list of messages
   *CLS and :STATus:PRESet – No effect

Table 5-8
SYSTem command summary

Command	Description	Default parameter	SCPI
:SYSTem			
:PRESet	Return to :SYST:PRES defaults.		√
:POSetup <name>	Select power-on setup: (RST, PRESet or SAV0).		
:POSetup?	Query power-on setup.		
:FRSWitch?	Query INPUTS switch (0=rear, 1=front).		
:VERSion?	Query rev level of SCPI standard.		√
:ERRor?	Query (read) Error Queue.	(Note)	√
:AZERo	Path to set up autozero.		
:STATe <b>	Enable or disable autozero.	ON	
:STATe?	Query autozero.		
:KEY <NRf>	Simulate key-press (1 to 31; see Figure 5-10).		√
:KEY?	Query the last “pressed” key.		√
:CLEar	Clears messages from the Error Queue.		
:BEEPer	Path to control beeper.		
[:STATe] <b>	Enable or disable beeper.	ON	√
[:STATe]?	Query state of beeper.		√
:LOCal	Take 2000 out of remote and restore operation of front panel controls (RS-232 only).		
:REMote	Place 2000 in remote (RS-232 only).		
:RWLock	Lockout front panel controls (RS-232 only).		
:KCLick <b>	Turn the keyclick on/off.	ON	
:KCLick	Query the keyclick status.		
:LFRequency?	Query power line frequency.		

Note: Clearing the Error Queue: Power-up and *CLS – Clears the Error Queue
*RST, :SYSTem:PRESet and :STATus:PRESet – No effect

Table 5-9
TRACe command summary

Command	Description	Default parameter*	SCPI
:TRACe|:DATA	Use :TRACe or :DATA as root command.		
:CLEar	Clear readings from buffer.		
:FREE?	Query bytes available and bytes in use.		√
:POINts <NRf>	Specify size of buffer (2 to 1024).		√
:POINts?	Query buffer size.		√
:FEED <name>	Select source of readings (SENSe[1], CALCulate[1], NONE.		√
:CONTrol <name>	Select buffer control mode (NEVer or NEXT)		√
:CONTrol?	Query buffer control mode.		√
:FEED?	Query source of readings for buffer.		√
:DATA?	Read all readings in the buffer.		√

*:SYSTem:PRESet and *RST have no effect on the commands in this subsystem.

Table 5-10
Trigger command summary

Command	Description	Default parameter	SCPI
:INITiate	Subsystem command path:		√
[:IMMediate]	Initiate one trigger cycle.		√
:CONTinuous <b>	Enable or disable continuous initiation.	(Note 1)	√
:CONTinuous?	Query continuous initiation.		√
:ABORt	Reset trigger system.		√
:TRIGger[:SEQuence[1]]	Path to program Trigger Layer:		√
:COUNt <n>	Set measure count (1 to 9999, or INF).	(Note 2)	√
:COUNt?	Query measure count.		√
:DELay <n>	Set delay (0 to 999999.999 sec)	0	√
:AUTO <b>	Enable or disable auto delay.	OFF	
:AUTO?	Query state of delay.		
:DELay?	Query delay.		√
:SOURce <name>	Select control source (IMMediate, TIMer, MANual, BUS, or EXTernal).	IMMediate	(Note 2)
:SOURce?	Query control source.		
:TIMer <n>	Set timer interval (0.001 to 999999.999 sec).	0.1	√
:TIMer?	Request the programmed timer interval.		√
:SIGNal	Loop around control source.		√
:SAMPle			√
:COUNt <NRf>	Specify sample count (1 to 1024).	1	
:COUNt?	Query sample count.		

Notes:
1. Defaults for continuous initiation:
   :SYSTem:PRESet enables continuous initiation
   *RST disables continuous initiation
2. Defaults for count:
   :SYSTem:PRESet sets the count to INF (infinite).
   *RST sets the count to 1.

Table 5-11
UNIT command summary

Command	Description	Default parameter	SCPI
:UNIT			
:TEMPerature <name>	Select temperature measurement units (C, F, or K).	C	√
:TEMPerature?	Query temperature units.		√
:VOLTage	Path to configure voltage units.		
:AC <name>	Select ACV measurement units (V, DB or DBM).	V	
:DB	Path to set DB reference voltage.		
:REFerence <n>	Specify reference in volts (le-7 to 1000).	1	
:REFerence?	Query DB reference.		
:DBM	Path to set DBM reference impedance.		
:IMPedance <n>	Specify reference impedance (1 to 9999).	75	
:IMPedance?	Query DBM reference impedance.		
:AC?	Query ACV units.		
[:DC] <name>	Select DCV measurement units (V, DB, or DBM)	V	
:DB	Path to set DB reference voltage:		
:REFerence <n>	Specify reference in volts (1e-7 to 1000).	1	
:REFerence?	Query reference.		
:DBM	Path to set DBM refernece impedance:		
:IMPedance <n>	Specify reference impedance (1 to 9999).	75	
:IMPedance?	Query reference impedance.		
:DC?	Query DCV units.		

Calculate subsystem

The commands in this subsystem are used to configure and control the Calculate subsystems and are summarized in Table 5-2.

:CALCulate[1]

These commands are used to configure and control the MXB (polynomial) and percent math calculations. Detailed information on math calculations is provided in Section 2.

:FORMat <name>

CALCulate[1]:FORMat <name> Specify CALC1 format

Parameters

<function> =	NONE	No calculations
	MXB	Polynomial math calculation
	PERCent	Percent math calculation

Query :FORMat? Query programmed math format

Description This command is used to specify the format for the CALC1 math calculations. With NONE selected, no CALC1 calculation is performed. With MXB or PERCent selected and enabled (see :STATe), the result of the calculation is displayed. The calculated reading is refreshed every time the instrument takes a reading.

:KMATh commands

:MMFactor <Nrf>

:CALCulate [1]:KMATh:MMFactor <NRf> Specify "m" factor

Parameter <NRf> = -100e6 to 100e6

Query :MMFactor? Query "m" factor

Description This command is used to define the"m" factor for the mx+b calculation.

:MBFactor <NRf>

:CALCulate [1]:KMATh:MBFactor <Nrf> Specify "b" factor

Parameter <NRf> = -100e6 to 100e6

Query :MBFactor? Query "b" factor

Description This command is used to define the"b" factor for the mx+b calculation.

:MUNits

:CALCulate [1]:KMATh:MUNits <name> **Specify units for mx+b**

Parameter <name> = 3 characters using ‘A’ through ‘Z’

Query :MUNits? Query units for mx+b

Description This command is used to specify the units data element for the mx+b calculation. Use any three letters from ‘A’ through ‘Z’.

:PERCent <NRf>

:CALCulate [1]:KMATh:PERCent <NRf> **Specify target value for percent calculation**

Parameter <Nrf> = -1e8 to +1e8 Specify target value.

Query :PERCENt? Query percent target value

Description This command is used to specify the target value for the percent calculation.

:ACQuire

:CALCulate [1]:KMATh:PERCent:ACQuire **Use input signal as target value**

Description This action command is used to acquire the present input signal reading and use it as the target value for the Percent calculation.

:STATe <b>

:CALCulate [1]:STATe <b> **Control CALC1**

Parameters

<b> =	0 or off	Disable CALC1 calculation
	1 or on	Enable CALC1 calculation

Query :STATe? Query state (on or off) of CALC1.

Description This command is used to enable or disable the CALC1 calculation. When enabled, each instrument reading will reflect the selected calculation (see :FORMat).

:DATA?

:CALCulate [1]:KMATh:DATA? **Read CALC1 result**

Description This query command is used to read the result of the CALC1 calculation. If CALC1 is disabled or NONE is selected, the “raw” reading will be read.

:CALCulate2

These commands are used to configure and control the CALC2 operations on readings stored in the buffer.

:FORMat <name>

CALCulate2:FORMat <name> — **Specify CALC2 format**

Parameters

<name> =	NONE	No calculations
	MEAN	Mean value of readings in buffer
	SDEViation	Standard deviation of readings in buffer
	MAXimum	Largest reading in buffer
	MINimum	Lowest reading in buffer

Query :FORMat? Query programmed math format

Description This command is used to specify the format for the CALC2 math calculation. The calculation operations for CALC2 use data stored in the buffer.

With NONE selected, no CALC2 calculation is performed. With any of the other formats selected and CALC2 enabled (see :STATe), the calculation is performed every time the :IMMediate or :IMMediate? command is executed.

:STATE <b>

:CALCulate2:STATe <b> — **Control CALC2**

Parameters

<b> =	0 or off	Disable CALC2 calculation
	1 or on	Enable CALC2 calculation

Query :STATe? Query state (on or off) of CALC2.

Description This command is used to enable or disable the CALC2 calculation. When enabled, the selected CALC2 format will be calculated when the :IMMediate or :IMMediate? command is executed.

:IMMediate

:CALCulate2:IMMediate **Perform CALC2**

Query :IMMediate? Perform calculation and read result (equivalent to :CALCulate2:IMMediate; DATA?)

Description The :IMMediate command is used to perform the selected CALC2 operation on the readings in the buffer (assuming CALC2 is enabled; see :STATe). After performing the calculation, the result can be read by using the :CALCulate2:DATA? query command.

Another way to perform the calculation and read the result is to use the query form of the command (:IMMediate?). When this command is sent, the calculation is performed and the result is queried.

Program This example assumes that there are readings stored in the buffer and that CALC2 is enabled:

```
PRINT #1, “output 02; :calc2:form max”  ‘ Select format
PRINT #1, “output 02; :calc2:imm?”      ‘ Perform math and query result
PRINT #1, “enter 02”                    ‘ Get response from 2000
```

:DATA?

:CALCulate2:DATA? **Read CALC2 result**

Description This query command is used to read the result of the CALC2 calculation. If CALC2 is disabled or NONE is selected, the “raw” reading will be read.

:CALCulate3

These commands are used to configure and control the CALC3 limit test.

[:DATA] <n>

:CALCulate3:LIMit [1]:UPPer[:DATA] <n> — **Specify upper limit1**
:CALCulate3:LIMit [1]:LOWEer[:DATA] <n> — **Specify lower limit**

Parameters

<n> =	-100e6 to 100e6	Specify limit value
	DEFault	Set specified upper limit to 1 Set specified lower limit to -1
	MINimum	Set specified limit to -100e6
	MAXimum	Set specified limit to +100e6

Description

This command is used to specify the upper and lower limit for LIMIT1. The actual limit depends on which measurement function is currently selected. For example, a limit value of 1 is 1V for the volts functions (DCV or ACV), 1A for the current functions (DCI or ACI), 1Ω on the ohms functions (2 or 4), and 1 (C, F, or K) for the temperature function (TEMP). A limit value is not range sensitive. A limit of 1 for DCV is 1V on all measurement ranges.

:STATE <b>

:CALCulate3:LIMit[1]:STATE <b> — **Control LIMIT1 test**

Parameters

<b> =	0 or off	Disable limit test
	1 or on	Enable limit test

Query

:STATe? Query state (on or off) of limit test

Description

This command is used to enable or disable the LIMIT1 test. When enabled, the test sequence for limits will be performed every time the instrument performs a measurement.

A failed indication (see :FAIL?) for LIMIT1 is cleared when the limit test is disabled.

:FAIL?

:CALCulate3:LIMit[1]:FAIL? — **Read LIMIT1 test result**

Description

This command is used to read the results of the LIMIT1 test:

0 = Limit test failed
1= Limit test passed

The response message (0 or 1) only tells you if a limit test has passed or failed. It does not tell you which limit (upper or lower) has failed. To deter-

mine which limit has failed, you will have to read the Measurement Event Register.

Reading the results of a limit test does not clear the fail indication of the test. A failure can be cleared by using a :CLEar command, or by disabling the test (:STATe OFF).

:CLEar commands

[:IMMediate]

:CALCulate3:LIMit[1]:CLEar[:IMMediate] **Clear LIMIT1 test failure**

Description This action command is used to clear the fail indication of the LIMIT1 test. Note that a failure is also cleared when the limit test is disabled (:STATe OFF).

:AUTO <b>

:CALCulate3:LIMit[1]:CLEar:AUTO <b> **Control auto- clear**

Parameters

<b> =	1 or ON	Enable auto-clear for limit failure
	0 or OFF	Disable auto-clear for limit failure

Query :AUTO? Query state of auto-clear

Description With auto-clear enabled, the fail indication of a limit test clears when instrument operation enters the idle state. With auto-clear disabled, the fail indication will remain until it is cleared by the :CLEar[IMMediate] command.

:IMMediate

:CALCulate3:IMMediate **Perform CALC3**

Description When you change the configuration of the limit test, the next reading is evaluated according to the new test configuration. If the instrument is not in a continuous measurement mode (e.g., waiting for a manual trigger), the test will not be performed until the next reading conversion occurs.

This action command allows you to re-process the current input data to test new limits. For example, assume the instrument is in a non-continuous measurement mode and requires a manual trigger to cause the next reading conversion. Changing the test limits will not affect the last test result. However, sending the :IMMediate command reprocesses the data and evaluates the reading according to the new test limits. Note that sending the :IMMediate command does not initiate a reading conversion.

Program

```
PRINT #1, “output 16;:trig:sour bus”    ‘ Place 2000 in one-shot mode
SLEEP 3                                 ‘ Wait three seconds
PRINT #1, “output 16;:calc:imm          ‘ Re-perform limit test
```

DISPlay subsystem

The commands in this subsystem are used to control the display of the Model 2000 and are summarized in Table 5-3.

:ENABle <b>

:DISPlay:ENABle <b> **Control display circuitry**

Parameters <b> = 0 or OFF Disable display circuitry
1 or ON Enable display circuitry

Query :ENABle? Query state of display

Description This command is used to enable and disable the front panel display circuitry. When disabled, the instrument operates at a higher speed. While disabled, the display is frozen.

All front panel controls (except LOCAL) are disabled. Normal display operation can be resumed by using the :ENABle command to enable the display or by putting the Model 2000 into local mode (press LOCAL).

:TEXT commands

:DATA <a>

:DISPlay[:WINDow[1]]:TEXT:DATA <a> **Define message for display.**

Parameter <a> = ASCII characters for message (maximum of 12 characters). The characters must be enclosed in either double quotes (“ ”) or single quotes (‘ ’).

Query :DATA? Query the defined text message.

Description These commands define the text message for display. A message can be as long as 12 characters. A space counts as a character. Excess message characters results in an error.

:STATe <b>

:DISPlay[WINDow[1]]:TEXT:STATe <b> **Control (on/off) message**

Parameters

<b> =	0 or OFF	Disable text message
	1 or ON	Enable text message

Query :STATe? Query state of message mode.

Description This command enables and disables the text message mode. When enabled, a defined message is displayed. When disabled, the message is removed from the display.

A user defined text message remains displayed only as long as the instrument is in remote. Taking the instrument out of remote (by pressing the LOCAL key or sending LOCAL 16), cancels the message and disables the text message mode.

:FORMat subsystem

The commands in this subsystem are used to select the data format for transferring instrument readings over the bus. The BORDer command and DATA command only affect readings transferred from the buffer. (i. e. SENSE:DATA? or CALC:DATA? are always sent in ASCII.) These commands are summarized in Table 5-4.

:DATA command

[:DATA] <type>

:FORMat[:DATA] <type> **Specify data format**

Parameters

<type> =	ASCII	ASCII format
	SREAL	IEEE754 single precision format
	DREAL	IEEE754 double precision format

Query [DATA]? Query data format

Description This command is used to select the data format for transferring readings over the bus. For every reading conversion, the data string sent over the bus contains the elements specified by the :ELEMents command. The specified elements are sent in a particular order.

The ASCII data format is in a direct readable form for the operator. Most BASIC languages easily convert ASCII mantissa and exponent to other formats. However, some speed is compromised to accommodate the conversion. Figure 5-1 shows the ASCII format that includes all the data elements.

Figure 5-1
ASCII data format

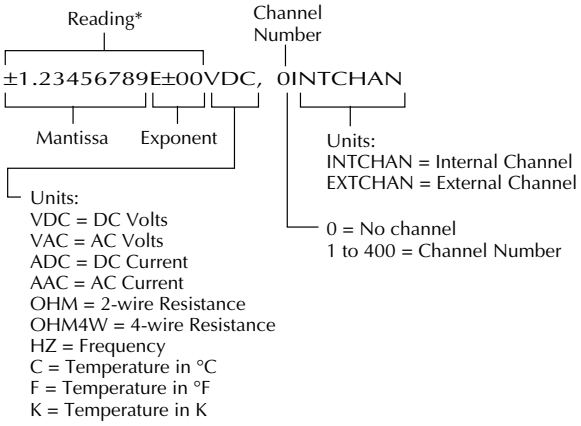

* An overflow reading is displayed as +9.9E37 with no units

SREAL will select the binary IEEE754 single precision data format. Figure 5-2 shows the normal byte order format for each data element. For example, if three valid elements are specified, the data string for each reading conversion is made up of three 32-bit data blocks. Note that the data string for each reading conversion is preceded by a 2-byte header that is the binary equivalent of an ASCII # sign and 0.

Figure 5-2
IEEE754 single precision data format (32 data bits)

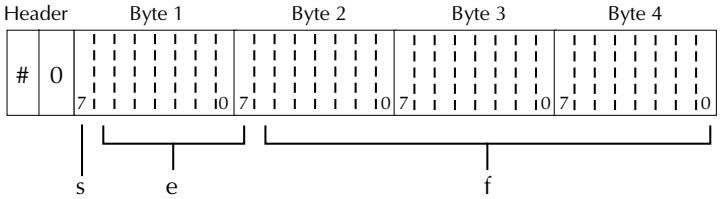

s = sign bit (0 = positive, 1 = negative)
e = exponent bits (8)
f = fraction bits (23)

Normal byte order shown. For swapped byte order, bytes sent in reverse order: Header, Byte 4, Byte 3, Byte 2, Byte 1.

The Header is only sent once for each measurement conversion.

DREAL selects the binary IEEE754 double precision data format and is shown in Figure 5-3 (normal byte order shown). This format is similar to the single precision format except that it is 64 bits long.

Figure 5-3
IEEE754 double precision data format (64 data bits)

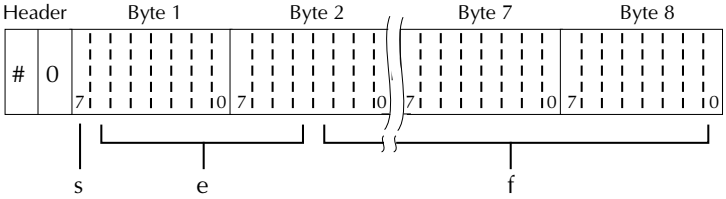

Bytes 3, 4, 5, and 6 not shown.

s = sign bit (0 = positive, 1 = negative)
e = exponent bits (11)
f = fraction bits (52)

Normal byte order shown. For swapped byte order, bytes sent in reverse order: Header, Byte 8, Byte 7 .... Byte 1.

The Header is only sent once for each measurement conversion.

:BORDer command

:BORDer <name>

:FORMat:BORDer <name> **Specify binary byte order**

Parameters

<name> =	NORMal	Normal byte order for binary formats
	SWAPped	Reverse byte order for binary formats

Query :BORDer? Query byte order

Description This command is used to control the byte order for the IEEE754 binary formats. For normal byte order, the data format for each element is sent as follows:

Byte 1	Byte 2	Byte 3	Byte 4	(Single precision)
Byte 1	Byte 2	...	Byte 8	(Double precision

For reverse byte order, the data format for each element is sent as follows:

Byte 4	Byte 3	Byte 2	Byte 1	(Single precision)
Byte 8	Byte 7	...	Byte 1	(Double precision)

The “#0” header is not affected by this command. The header is always sent at the beginning of the data string for each measurement conversion.

The ASCII data format can only be sent in the normal byte order. The SWAPped selection is simply ignored when the ASCII format is selected.

:ELEMents command

:ELEMents <item list>

:FORMat:ELEMents <item list>

Parameters

<item list>:	READing	Includes reading in data string
	CHANnel	Includes channel number
	UNITs	Includes units

NOTE: Each item in the list must be separated by a comma (,).

Query

:ELEMents? Query elements in data string

Description

This command is used to specify the elements to be included in the data string for each measurement conversion. You can specify from one to all three elements. Each element in the list must be separated by a comma (,). These elements, shown in Figure 5-1, are explained as follows:

READing: Instrument reading. The resolution of this reading tracks the display resolution of the instrument. An overflow reading reads as +9.9e37 with no units.

CHANnel: Corresponds the instrument reading to the channel number of a switching card. If not scanning, the channel number is 0.

UNITs: This element attaches the function unit to the reading, and the channel unit (internal or external) to the channel number. An internal channel refers to an internally installed switching card channel, while an external channel refers to the channel for an external switch system. This element is not available for the binary formats.

The ASCII format shown in Figure 5-1 shows the byte order of the data string. Keep in mind that the byte order can only be reversed for the binary formats.

When using this command to add an element, you must include all elements that you want in the format. For example, if the reading is already specified and you want to add the channel, you must include the READing parameter:

:form:elem chan, read

Data elements for the item list can be listed in any order, but are always sent in the order shown in Figure 5-1.

ROUTe subsystem

The commands in this subsystem are used to configure and control switching and are summarized in Table 5-5.

Single channel (or channel pair) control

Like operation from the front panel, the following commands let you close a single channel (or channel pair for 4-pole operation) on an internal scanner card.

:CLOSe <chan num>

:ROUTe:CLOSe <chan num> **Close specified channel or channel pair**

Parameter <chan num> = (@ X) Specify channel (X)

where X is a single channel (1 through 10) or a channel pair (1 through 5) to be closed.

Description This command lets you close a single channel or channel pair on the internal scanner card. Only one channel (or channel pair) can be closed at a time. When this command is sent, any closed channels are first opened. Then, the specified channel (or channel pair) closes.

When using this command, pole mode (2-pole or 4-pole) is determined by the present measurement function. With a 2-wire function selected (i.e., DCV), 2-pole switching will be performed at the scanner card. The specified channel (1 through 10) will close.

With a 4-wire function selected (i.e., W4), 4-pole switching will be performed at the scanner card. The specified channel pair (1 through 5) will close.

In the 4-pole mode, channels are paired as follows:

- Channel 1 is paired to Channel 6
- Channel 2 is paired to Channel 7
- Channel 3 is paired to Channel 8
- Channel 4 is paired to Channel 9
- Channel 5 is paired to Channel 10

Examples:

	2-pole mode	4-pole mode
rout:clos (@ 2)	Close channel 2	Close channels 2 and 7
rout:clos (@ 4)	Close channel 4	Close channels 5 and 9
rout:clos (@ 7)	Close channel 7	Not valid

When a channel (or channel pair) is closed using this command, the channel annunciator that corresponds to that channel is displayed. Note that for 4-pole operation, the annunciator for the paired channel is not displayed. For example, if channel pair 4 and 9 is closed, only the “CH4” annunciator is displayed.

:CLOSe:STATe?

:ROUTe:CLOSe:STATe? **Query closed channel or channel pair**

Description The response message for this query command indicates the channel (or channel pair) that has been closed on the internal scanner card using the :rout:close <chan num> command (or channels closed from the front panel). Note that for 4-pole operation, the paired channel is not included in the response message. For example, if channel pair 4 and 9 has been closed, the (@4) response message will be returned.

NOTE *For 4-pole operation, the rout:mult:close? query command includes the paired channel in the response message (see "Multiple channel control").*

The rout:close? query command will not indicate channels that have been closed using the rout:mult:close <list> command (see "Multiple channel control").

Channels cannot be closed if a scan (internal or external) is presently enabled. See the :LSELect <name> command in "Scan commands" to disable scan operations.

:OPEN:ALL

:ROUTe:OPEN:ALL **Open all input channels**

Description This command is used to open all input channels (1 through 10) on the internal scanner card.

The only channel this command will not open is channel 11. This channel is the 2-pole/4-pole relay and is controlled by the multiple channel commands. See "Multiple channel control" for details on controlling channel 11.

Sending rout:open:all disables scan operation (sets :LSELect to NONE; see "Scan commands").

Multiple channel control

The following commands let you close one or more channels at the same time. They also let you manually select the 2-pole or 4-pole mode of operation.

:CLOSe <list>

:ROUTe:MULTiple:CLOSe <list> **Close specified channels**

Parameter <list> = (@ chanlist) Specify channels to close

where chanlist is the list of channels (1 through 11) to be closed.

This command lets you have multiple channels closed at the same time. When this command is sent, the channels specified in the chanlist close.

Pole mode is not affected by the selected measurement function. Instead, it is selected by controlling channel 11, which is the 2-pole/4-pole relay. Closing channel 11 selects the 2-pole mode. When channel 11 is open, the 4-pole mode is selected. Use the rout:multiple:open <list> command to open channel 11.

Examples of a list:

list = (@1,3,5) Channels 1, 3, and 5.
= (@1:5) Channels 1 through 5.

When this command is sent, the front panel channel number annunciators are disabled. Use the following query command to determine which channels are closed.

:CLOSe:STATe?

:ROUTe:MULTiple:CLOSe:STATe? **Query closed channels**

Description This query command is used to determine which channels on the internal scanner card are closed. After sending this command and addressing the instrument to talk, a list of all closed channels is sent to the computer.

:OPEN <list>

:ROUTe:MULTiple:OPEN <list> **Open specified channels**

Parameter <list> = (@ chanlist) Specify channels to open

where chanlist is the list of channels (1 through 11) to be opened.

Description This command is used to open specified channels on the internal scanner card. When this command is sent, the channels specified in the chanlist will open.

Channel 11 is the 2-pole/4-pole relay. Opening channel 11 selects the 4-pole operating mode.

Examples of a list:

list = (@1,3,5) Channels 1, 3, and 5.
= (@1:5) Channels 1 through 5.

:SCAN commands

[:INTernal] <list>

:ROUTe:SCAN[:INTernal] <list> **Define internal scan list and enable scan.**

Parameter <list> = (@ scanlist)

where scanlist is the specified list of channels (1 through 10) to be scanned.

Query [:INTernal]? Query programmed scan list

Description This command is used to define the scan list for the internal scanner card. The scan list can contain 2 to 10 channels. The following examples demonstrate the various forms for expressing a scan list:

list = (@ 2,3,4)	Channels separated by commas (,).
(@ 1:8)	Range of channels (1 through 8). Range limits separated by a colon (:).

NOTE *You can only scan consecutive channels. Skipping channels is not allowed. For example:*

(@1:4) is valid.
(@1,2,4) is not valid.

See the instruction manual of the internal scanner card for details on scanning.

:EXTernal <list>

:ROUTe:SCAN:EXTernal <list> **Define external scan list**

Parameter <list> = (@ scanlist)

where scanlist is the specified list of external channels (1 to 800) to be scanned.

Query :EXTernal? Query programmed scan list

Description The Model 2000 can operate with an external switch system, such as the Keithley Model 7001 or 7002. The Model 2000 can measure up to 800 channels that are switched by the external switching system. This command is used to define the external scan list.

The scan list can contain 2 to 800 channels. See :SCAN[:INTernal] for examples to express a scan list. The external scan is enabled by the ROUTe:SCAN:LSELect EXTernal command.

:LSELect <name>

:ROUTe:SCAN:LSELect <name> **Perform specified scan operation**

Parameters

<name> =	INTernal	Enable scan for internal scanner card
	EXTernal	Enable scan for external scanner card
	NONE	Disable all scan operations

Query :LSELect?: Query scan operation

Description This command is used to select and perform the desired scan operation. When INTernal is selected, the Model 2000 scans the channels of the internal switching card according to how the scan is configured (see :SCAN[:INTernal]).

EXTernal is used to measure channels that are controlled by an external switch system. When EXTernal is selected, the Model 2000 scans the external scan list (see :SCAN:EXTernal).

When NONE is used, the Model 2000 disables all operations associated with a scan.

[SENSe[1]] subsystem

The Sense 1 Subsystem is used to configure and control the measurement functions of the Model 2000. A function does not have to be selected before you program its various configurations. A function can be selected any time after it has been programmed. Whenever a programmed function is selected, it assumes the programmed states.

:FUNCtion Command

:FUNCtion <name>

[:SENSe[1]]:FUNCtion <name> **Select measurement function.**

Parameters

<name> =	‘CURRent:AC’	‘Select AC Current
	‘CURRent[:DC]’	‘Select DC Current
	‘VOLTage:AC’	‘Select AC Voltage
	‘VOLTage[:DC]’	‘Select DC Voltage
	‘RESistance’	‘Select 2-wire Resistance
	‘FRESistance’	‘Select 4-wire Resistance
	‘PERiod’	‘Select Period
	‘FREQuency’	‘Select Frequency
	‘TEMPerature’	‘Select Temperature
	‘DIODe’	‘Select Diode Testing
	‘CONTinuity’	‘Select Continuity Testing

Query :FUNCtion? Query currently programmed function.

Description The :FUNCtion command is used to select the measurement function of the instrument. Note that parameter names are enclosed in single quotes (’). However, double quotes (“) can instead be used. For example:

:func ‘volt’ = :func “volt”

Each measurement function “remembers” its own unique setup configuration, such as range, speed, resolution, filter and rel. This eliminates the need to re-program setup conditions every time you switch from one function to another.

:DATA command

:DATA?

[:SENSe[1]]:DATA? **Return reading.**

Description This query command is used to read the latest instrument reading. This command returns the "raw" reading or a reading that is the result of the Reference (REL from the front panel) operation. For example, if a reference value of 1.0 is established, the reading returned by this command is the "raw" reading minus 1.0. Calculated (MATH) readings cannot be read with this command (see the CALCulate subsystem for information on how to read math calculations).

The reading is returned in exponent form. For example, a 10V DC reading will be displayed on the CRT as follows: +1.000000E+01

Notice that the measurement function is not included in the response message. Thus, you may want to perform a function query (see previous command) after a reading query.

:HOLD Command

The following commands are used to configure and control the Hold feature. For details on Hold, refer to “Trigger Model, Device Action” in this section and “Hold” in Section 3.

:WINDow <NRf>

[:SENSe[1]]:HOLD:WINDow <NRf><name> **Set Hold window**

Parameter <NRf> = 0.01 to 20 Set window (percent)

Query :WINDow? Query Hold window.

Description This command is used to set the window for Hold. The window is expressed as a percent of the “seed” reading for the Hold process.

:COUNt <NRf>

[:SENSe[1]]:HOLD:COUNt <NRf> **Specify Hold count.**

Parameter <NRf> = 2 to 100 Specify Hold count

Query :COUNt? Query Hold count.

Description This command is used to specify the count for Hold. Count is the number of readings that are compared to the “seed” reading during the Hold process.

:STATe <b>

[:SENSe[1]]:HOLD:STATe <b> **Control (on/off) Hold**

Parameters <b> =

0 or OFF	Disable Hold
1 or ON	Enable Hold

Query :STATe? Query state of Hold.

Description This command is used to enable or disable Hold. See “Hold” in Section 3 and “Trigger Model, Device Action” in this section for details on Hold.

Speed Commands

:NPLCycles <n>

[:SENSe[1]]:CURRent:AC:NPLCycles <n>	**Set NPLC for ACI**
[:SENSe[1]]:CURRen[:DC]:NPLCycles <n>	**Set NPLC for DCI**
[:SENSe[1]]:VOLTage:AC:NPLCycles <n>	**Set NPLC for ACV**
[:SENSe[1]]:VOLTage[:DC]:NPLCycles <n>	**Set NPLC for DCV**
[:SENSe[1]]:RESistance:NPLCycles <n>	**Set NPLC for Ω2**
[:SENSe[1]]:FRESistance:NPLCycles <n>	**Set NPLC for Ω4**
[:SENSe[1]]:TEMPerature:NPLCycles <n>	**Set NPLC for TEMP**

Parameters

<n> =	0.01 to 10	Power line cycles per integration
	DEFault	1
	MINimum	0.01
	MAXimum	10

Query

:NPLCycles?	Query programmed NPLC value
:NPLCycles? DEFault	Query *RST default value
:NPLCycles? MINimum	Query minimum NPLC value
:NPLCycles? MAXimum	Query maximum NPLC value

Description The integration period (measurement speed) for the basic measuement functions (except Frequency and Period) is set using the :NPLCycle command. NPLC (Number of Power Line Cycles) expresses the integration period by basing it on the power line frequency. For example, for a PLC of 1, the integration period in seconds would be 1/60 (for 60Hz line power) which is 16.67msec.

:APERture <n>

[:SENSe[1]]:FREQuency:APERture <n> Set aperture for frequency
[:SENSe[1]]:PERiod:APERture <n> Set aperture for period

Parameter

<n> =	0.01s to 1.0s
	DEFault 1.0s
	MINimum 0.01s
	MAXimum 1.0s

Query :APERture? Query programmed APERture value

Description The integration period (measurement speed) for Frequency and Period is set using the APERture command (to set other basic measurement functions, see :NPLCycle). The unit of measurement for the APERture command is seconds.

:RANGe commands

[:UPPer] <n>

[:SENSe[1]]:CURRent:AC:RANGe[:UPPer] <n>	**Set measurement range for ACI**
[:SENSe[1]]:CURRent[:DC]:RANGe[:UPPer] <n>	**Set measurement range for DCI**
[:SENSe[1]]:VOLTage:AC:RANGe[:UPPer] <n>	**Set measurement range for ACV**
[:SENSe[1]]:VOLTage[:DC]:RANGe[:UPPer] <n>	**Set measurement range for DCV**
[:SENSe[1]]:RESistance:RANGe[:UPPer] <n>	**Set measurement range for Ω2**
[:SENSe[1]]:FRESistance:RANGe[:UPPer] <n>	**Set measurement range for Ω4**

Parameters

<n> =	0 to 3.1	Expected reading is amps (ACI and DCI)
	0 to 757.5	Expected reading is AC volts (ACV)
	0 to 1010	Expected reading in DC volts (DCV)
	0 to 120e6	Expected reading is ohms (Ω2 and Ω4)
	DEFault	3 (ACI and DCI)
		757.5 (ACV)
		1000 (DCV)
		100e6 and Ω
	MINimum	0 (All functions)
	MAXimum	Same as DEFault

Query

:RANGe[:UPPer]?	Query ACI measurement range
:RANGe[:UPPer]? DEFault	Query *RST default range
:RANGe[:UPPer]? MINimum	Query lowest measurement range
:RANGe[:UPPer]? MAXimum	Query highest measurement range

Description

This command is used to manually select the measurement range for the specifed measurement function. The range is selected by specifying the expected reading as an absolute value. The Model 2000 will then go to the most sensitive range that will accommodate that expected reading. For example, if you expect a reading of approximately 50mV, simply let the parameter (<n>) = 0.05 (or 50e-3) in order to select the 100mV range.

:AUTO <b>

[:SENSe[1]]:CURRent:AC:RANGe:AUTO <b>	**Control auto range for ACI**
[:SENSe[1]]:CURRent[:DC]:RANGe:AUTO <b>	**Control auto range for DCI**
[:SENSe[1]]:VOLTage:AC:RANGe:AUTO <b>	**Control auto range for ACV**
[:SENSe[1]]:VOLTage[:DC]:RANGe:AUTO <b>	**Control auto range for DCV**
[:SENSe[1]]:RESistance:RANGe:AUTO <b>	**Control auto range for Ω2**
[:SENSe[1]]:FRESistance:RANGe:AUTO <b>	**Control auto range for Ω4**

Parameters

<b> =	1 or ON	Enable auto range
	0 or OFF	Disable auto range

Query

:AUTO? Query auto range (on or off)

Description

These commands are used to control auto ranging. With auto ranging enabled, the instrument automatically goes to the most sensitive range to perform the measurement.

The auto range command (:RANGe:AUTO) is coupled to the command that manually selects the measurement range (:RANGe <n>). When auto range is enabled, the parameter value for :RANGe <n> changes to the automatically selected range value. Thus, when auto range is disabled, the instrument remains at the automatically selected range. When a valid :RANGe <n> command is sent, auto ranging disables.

:REFerence <n> commands

:REFerence <n>

[:SENSe[1]]:CURRent:AC:REFerence <n>	**Specify reference for ACI**
[:SENSe[1]]:CURRent[:DC]:REFerence <n>	**Specify reference for DCI**
[:SENSe[1]]:VOLTage:AC:REFerence <n>	**Specify reference for ACV**
:SENSe[1]]:VOLTage[:DC]:REFerence <n>	**Specify reference for DCV**
[:SENSe[1]]:RESistance:REFerence <n>	**Specify reference for Ω2**
[:SENSe[1]]:FRESistance:REFerence <n>	**Specify reference for Ω4**
[:SENSe[1]]:FREQuency:REFerence <n>	**Specify reference for FREQ**
[:SENSe[1]]:PERiod:REFerence <n>	**Specify reference for PER**
[:SENSe[1]]:TEMPerature:REFerence <n>	**Specify reference for TEMP**

Parameters

<n> =	-3.1 to 3.1	Reference for ACI and DCI
	-757.5 to 757.5	Reference for ACV
	-1010 to 1010	Reference for DCV
	0 to 120e6	Reference for Ω2 and Ω4
	0 to 1.5e7	Reference for FREQ
	0 to 1	Reference for PER
	-200 to 1372	Reference for TEMP
	DEFault	0 (all functions)
	MINimum	Minimum value for specified function
	MAXimum	Maximum value for specified function

Query

:REFerence?	Query programmed reference value
:REFerence? DEFault	Query *RST default reference value
:REFerence? MINimum	Query lowest allowable reference value
:REFerence? MAXimum	Query largest allowable reference value

Description

These commands are used to establish a reference value for the specified function. When Reference is enabled (see :REFerence:STATe), the result will be the algebraic difference between the input signal and the reference value:

Reading = Input signal - Reference

From the front panel, reference is called relative (REL).

The :REFerence <n> command is coupled to the :ACQuire command. The last command sent (:REFerence <n> or :ACQuire) establishes the reference. When a reference is set using the :REFerence <n> command, the :REFerence? query command returns the programmed value. Conversely, when a reference is set using the :ACQuire command, the :REFerence? query command returns the acquired reference value.

:STATe <b>

[:SENSe[1]]:CURRent:AC:REFerence:STATe <b>	**Control reference for ACI**
[:SENSe[1]]:CURRent[:DC]:REFerence:STATe <b>	**Control reference for DCI**
[:SENSe[1]]:VOLTage:AC:REFerence:STATe <b>	**Control reference for ACV**
[:SENSe[1]]:VOLTage[:DC]:REFerence:STATe <b>	**Control reference for DCV**
[:SENSe[1]]:RESistance:REFerence:STATe <b>	**Control reference for Ω2**
[:SENSe[1]]:FRESistance:REFerence:STATe <b>	**Control reference for Ω4**
[:SENSe[1]]:FREQuency:REFerence:STATe <b>	**Control reference for FREQ**
[:SENSe[1]]:PERiod:REFerence:STATe <b>	**Control reference for PER**
[:SENSe[1]]:TEMPerature:REFerence:STATe <b>	**Control reference for TEMP**

Parameters

<b> =	1 or ON	Enable reference
	0 or OFF	Disable reference

Query :STATe? Query state of reference

Description These commands are used to enable or disable Reference for the specified function. When enabled, the displayed reading will include the programmed reference value (see :REFerence <n> and :ACQuire). When disabled, the displayed reading will not include the reference value.

:ACQuire

[:SENSe[1]]:CURRent:AC:REFerence:ACQuire	**Acquire reference for ACI**
[:SENSe[1]]:CURRent[:DC]:REFerence:ACQuire	**Acquire reference for DCI**
[:SENSe[1]]:VOLTage:AC:REFerence:ACQuire	**Acquire reference for ACV**
[:SENSe[1]]:VOLTage[:DC]:REFerence:ACQuire	**Acquire reference for DCV**
[:SENSe[1]]:RESistance:REFerence:ACQuire	**Acquire reference for Ω2**
[:SENSe[1]]:FRESistance:REFerence:ACQuire	**Acquire reference for Ω4**
[:SENSe[1]]:PERiod:REFerence:ACQuire	**Acquire reference for PER**
[:SENSe[1]]:FREQuency:REFerence:ACQuire	**Acquire reference for FREQ**
[:SENSe[1]]:TEMPerature:REFerence:ACQuire	**Acquire reference for TEMP**

Description When one of these commands is sent, the measured input signal is acquired and established as the reference value. This command is typically used to zero the display. For example, if the instrument is displaying a 1µV offset, sending this command and enabling Reference (see :STATe) zeroes the display.

This command is functional only if the instrument is on the specified measurement function. Sending this command while in any other function causes an error. Also, if the latest reading is overflowed (“OFLO”) or a reading has not been triggered (“----”), an error occurs when this command is sent.

The :ACQuire command is coupled to the :REFerence <n> command. See the description for :REFerence for details.

:DIGits command

:DIGits <n>

[:SENSe[1]]:CURRent:AC:DIGits <n>	**Specify resolution for ACI**
[:SENSe[1]]:CURRent:DC:DIGits <n>	**Specify resolution for DCI**
[:SENSe[1]]:VOLTage:AC:DIGits <n>	**Specify resolution for ACV**
[:SENSe[1]]:VOLTage:DC:DIGits <n>	**Specify resolution for DCV**
[:SENSe[1]]:RESistance:DIGits <n>	**Specify resolution for Ω2**
[:SENSe[1]]:FRESistance:DIGits <n>	**Specify resolution for Ω4**
[:SENSe[1]]:PERiod:DIGits <n>	**Specify resolution for PER**
[:SENSe[1]]:FREQuency:DIGits <n>	**Specify resolution for FREQ**
[:SENSe[1]]:TEMPerature:DIGits <n>	**Specify resolution for TEMP**

Parameters

<n> =	4	3½ digits
	5	4½ digits
	6	5½ digits
	7	6½ digits
	DEFault	6½ digits for DCI, DCV, Ω2, Ω4, FREQ, PER 5½ digits for ACI, ACV, TEMP
	MINimum	3½ for DCI, ACI, ACV, DCV, Ω2, Ω4, TEMP
	MAXIMUM	6½ digits for DCI, ACI, ACV, DCV, Ω2, Ω4, TEMP

Query

:DIGits?	Query selected resolution
:DIGits? DEFault	Query *RST default resolution
:DIGits? MINimum	Query minimum allowable resoltuion
:DIGits? MAXimum	Query maximum allowable resolution

Description

These commands are used to select display resolution for the specified measurement function.

Even though the parameters for this command are expressed as integers (4 to 7), you can specify resolution using real numbers. For example, to select 3½ digit resolution let <n> = 3.5, for 4½ digit let <n> = 4.5, and so on. Internally, the instrument rounds the entered parameter value to the nearest integer.

:AVERage commands

The :AVERage commands are used to configure and control the filter. The Filter is explained in Section 3.

:STATe <b>

[:SENSe[1]]:CURRent:AC:AVERage:STATe <b>	**Control filter for ACI**
[:SENSe[1]]:CURRent[:DC]:AVERage:STATe <b>	**Control filter for DCI**
[:SENSe[1]]:VOLTage:AC:AVERage:STATe <b>	**Control filter for ACV**
[:SENSe[1]]:VOLTage[:DC]:AVERage:STATe <b>	**Control filter for DCV**
[:SENSe[1]]:RESistance:AVERage:STATe <b>	**Control filter for Ω2**
[:SENSe[1]]:FRESistance:AVERage:STATe <b>	**Control filter for Ω4**
[:SENSe[1]]:TEMPerature:AVERage:STATe <b>	**Control filter for TEMP**

Parameters <b> = 0 or OFF Disable the digital filter
1 or ON Enable the digital filter

Query :STATe? Query state of digital filter

Description These commands are used to enable or disable the digital averaging filter for the specified function. When enabled, readings will be filtered according to how the filter is configured.

:TCONtrol <name>

:SENSe[1]]:CURRent:AC:AVERage:TCONtrol <name>	**Select filter type for ACI**
[:SENSe[1]]:CURRent[:DC]:AVERage:TCONtrol <name>	**Select filter type for DCI**
[:SENSe[1]]:VOLTage:AC:AVERage:TCONtrol <name>	**Select filter type for ACV**
[:SENSe[1]]:VOLTage[:DC]:AVERage:TCONtrol <name>	**Select filter type for DCV**
[:SENSe[1]]:RESistance:AVERage:TCONtrol <name>	**Select filter type for Ω2**
[:SENSe[1]]:FRESistance:AVERage:TCONtrol <name>	**Select filter type for Ω4**
[:SENSe[1]]:TEMPerature:AVERage:TCONtrol <name>	**Select filter type for TEMP**

Parameters <name> = REPeat Select repeating filter
MOVing Select moving filter

Query :TCONtrol? Query filter type

Description These commands are used to select the type of averaging filter (REPeat or MOVing) for the specified function. These filter types are explained in Section 3 (see “Filter Modes”).

The number of readings that are averaged by the filter is set with the :AVERage:COUNt command. The :AVERage:STATe command is used to enable or disable the filter. Changing the filter type disables auto filter.

:COUNt <n>

[:SENSe[1]]:CURRent:AC:AVERage:COUNt <n>	**Specify filter count for ACI**
[:SENSe[1]]:CURRent[:DC]:AVERage:COUNt <n>	**Specify filter for DCI**
[:SENSe[1]]:VOLTage:AC:AVERage:COUNt <n>	**Specify filter count for ACV**
[:SENSe[1]]:VOLTage[:DC]:AVERage:COUNt <n>	**Specify filter count for DCV**
[:SENSe[1]]:RESistance:AVERage:COUNt <n>	**Specify filter count for Ω2**
[:SENSe[1]]:FRESistance:AVERage:COUNt <n>	**Specify filter count for Ω4**
[:SENSe[1]]:TEMPerature:AVERage:COUNt <n>	**Specify filter count for TEMP**

Parameters

<n> =	1 to 100	Specify filter count
	DEFault	10
	MINimum	1
	MAXimum	100

Query

:COUNt?	Query filter count
:COUNt? DEFault	Query the *RST default filter count
:COUNt? MINimum	Query the lowest allowable filter count
:COUNt? MAXimum	Query the larges allowable filter count

Description

These commands are used to specify the filter count. In general, the filter count is the number of readings that are acquired and stored in the filter buffer for the averaging calculation. The larger the filter count, the more filtering that is performed.

Bandwidth command

:BANDwidth <n>

[:SENSe[1]]:CURRent:AC:DETector:BANDwidth <n> **Specify maximum bandwidth for ACI**
[:SENSe[1]]:VOLTage:AC:DETector:BANDwidth <n> **Specify maximum bandwidth for ACV**

Parameters <n> = 3 to 300e3 Specify bandwidth (in Hz)

Query BANDwidth? Query selected bandwidth

Description The Model 2000 uses three bandwidth settings for ACI and ACV measurements; 3 (3Hz-300kHz), 30 (30Hz-300kHz) and 300 (300Hz-300kHz). To achieve best accuracy, you should use the bandwidth setting that best reflects the frequency of the input signal. For example, if the input signal is 40Hz, then a bandwidth setting of 30 should be used.

These commands are used to select bandwidth for the ACI and ACV functions. To set the bandwidth, simply specify (approximately) the frequency of the input signal. The Model 2000 will automatically select the optimum bandwidth setting.

NOTE *For bandwidth setting of 3 and 30, the normal A/D reading conversion method is not used. Thus, the NPLC setting is only valid for bandwidth setting of 300.*

:THReshold commands

Use these commands to set the maximum range input (signal level) for frequency and period measurements.

:RANGe <n>

[:SENSe[1]]:PERiod:THReshold:VOLTage:RANGe <n> **Set voltage threshold range**
[:SENSe[1]]:FREQuency:THReshold:VOLTage:RANGe <n> **Set voltage threshold range**

Parameters <n> = 0 to 1010 Specify signal level in volts (voltage threshold)

Query :RANGe? Query maximum signal level

Description These commands are used to specify the expected input level. The instrument will then automatically select the most sensitive current or voltage threshold range.

Thermocouple commands

:TYPE <name>

[:SENSe[1]]:TEMPerature:TCouple:TYPE <name> **Specify TC type**

Parameters

<name> =	J	Set operation for Type J thermocouples
	K	Set operation for Type K thermocouples
	T	Set operation for Type T thermocouples

Query :TYPE? Query thermocouple type

Description This command is used to configure the Model 2000 for the thermocouple type that you are using to make temperature measurements.

These commands are used to configure the reference junction for thermocouple temperature measurements.

:RSELect <name>

[:SENSe[1]]:TEMPerature:TCouple:RJUNction[1]:RSELect <name> **Specify reference junction type.**

Parameters

<name> =	SIMulated	Use simulated temperature as reference
	REAL	Use a measured temperature as reference

Query :RSELect? Query reference junction type

Description This command is used to specify the type of reference junction that is going to be used for thermocouple temperature measurements. Specify REAL if you are using an actual reference junction. The :REAL command is then used to specify the desired reference temperature. Specify SIMulated if you wish to use a simulated reference temperature. The :SIMulated command is then used to specify the desired simulated reference temperature.

:SIMulated <n>

[:SENSe[1]]:TEMPerature:TCouple:RJUNction[1]:SIMulated <n>

Parameters

<n> =	0 to 50	Specify temperature in °C
	32 to 122	Specify temperature in °F
	273 to 323	Specify temperture in K
	DEFault	23°C, 73.4°F, 296K
	MINimum	0°C, 32°F, 273K
	MAXimum	50°C, 122°F, 323K

Query

:SIMulated?	Query simulated reference
:SIMulated? DEFault	Query default *RST reference
:SIMulated? MINimum	Query lowest allowable reference
:SIMulated? MAXimum	Query largest allowable reference

Description

This command is used to specify the simulated reference temperature. The temperature value depends on which temperature scale is currently selected (°C, °F or K). Typically, 0° or 23°C is used as the simulated reference temperature.

:REAL:TCOefficient <n>

[:SENSe[1]]:TEMPerature:TCouple:RJUNction[1]]:REAL:TCoefficient <n>

Parameters

<n> =	-0.09999 to 0.09999	Specify temperature coefficient
	DEFault	+0.01 temperature coefficient
	MINimum	-0.09999 temperature coefficient
	MAXimum	+0.09999 temperature coefficient

Query

:TCOefficient?	Query temperature coefficient (TC)
:TCOefficient? DEFault	Query *RST default TC
:TCOefficient? MINimum	Query lowest allowable TC
:TCOefficient? MAXimum	Query largest allowable TC

Description

This command is used to specify the temperature coefficient (TC) of the “real” temperature reference junction. TC is specified in °C/volt and is not affected by the :UNIT:TEMPerature command.

:REAL:OFFSet <n>

[:SENSe[1]]:TEMPerature:TCouple:RJUNction[1]:REAL:OFFSET <n>

Parameters

<n> =	-0.09999 to 0.09999	Specify voltage offset at 0°C
	DEFault	0.05463
	MINimum	-0.09999
	MAXimum	0.09999

Query

:OFFSet?	Query voltage offset
:OFFSet? DEFault	Query *RST default voltage offset
:OFFSet? MINimum	Query lowest allowable voltage offset
:OFFSet? MAXimum	Query largest allowable voltage offset

Description This command is used to specify the offset voltage at 0°C for the specified reference junction.

:DIODe command

:RANGe[:UPPer] <NRf>

[:SENSe[1]]:DIODe:CURRent:RANGe[:UPPer] <NRf> **Select current range for diode test**

Parameters <NRf> = 0 to 1e-3 Specify diode test current

Query [UPPer]? Query selected range

Description There are three current ranges available for the diode test: 10µA range, 100µA range and the 1mA range. Range is selected by using this command to specify the expected current for the diode under test. The instrument will then automatically select the appropriate range.

:CONTinuity command

:THReshold <n>

[SENSe[1]]:CONTinuity:THReshold <NRf> **Specify threshold resistance**

Parameters <NRf> = 1 to 1000 Specify threshold in ohms

Query :THReshold? Query threshold resistance

This command is used to specify the threshold resistance for the continuity test. Continuity occurs when the measurement is less than or equal to the specified threshold level.

STATus subsystem

The STATus subsystem is used to control the status registers of the Model 2000. The commands in this subsystem are summarized in Table 5-7.

[:EVENt]? command

[:EVENt]?

:STATus:MEASurement[:EVENt]?	**Read Measurement Event Register**
:STATus:OPERation[:EVENt]?	**Read Operation Event Register**
:STATus:QUEStionable[:EVENt]?	**Read Questionable Event Register**

Description These query commands are used to read the event registers. After sending one of these commands and addressing the Model 2000 to talk, a decimal value is sent to the computer. The binary equivalent of this value determines which bits in the appropriate register are set. The event registers are shown in Figures 5-4, 5-5, and 5-6. Note that reading an event register clears the bits in that register.

For example, assume that reading the Measurement Event Register results in an acquired decimal value of 544. The binary equivalent is 0000001000100000. For this binary value, bits B5 and B9 of the Measurement Event Register are set.

Measurement Event Register:

Bit B0, Reading Overflow (ROF) — Set bit indicates that the reading exceeds the measurement range of the instrument.

Bit B1, Low Limit (LL) — Set bit indicates that the reading is less than the Low Limit 1 setting.

Bit B2, High Limit (HL) — Set bit indicates that the reading is greater than the High Limit 1 setting.

Bits B3 and B4 — Not used.

Bit B5, Reading Available (RAV) — Set bit indicates that a reading was taken and processed.

Bit B6 — Not used.

Bit B7, Buffer Available (BAV) — Set bit indicates that there are at least two readings in the trace buffer.

Bit B8, Buffer Half Full (BHF) — Set bit indicates that the trace buffer is half full.

Bit B9, Buffer Full (BFL) — Set bit indicates that the trace buffer is full.

Bits B10 through B15 — Not used.

Figure 5-4 *Measurement event register*

Bit Position	B15 - B12	B11	B10	B9	B8	B7	B6	B5	B4	B3	B2	B1	B0
Event	——	—	—	BFL	BHF	BAV	—	RAV	—	—	HL	LL	ROF
Decimal Weighting	——	—	—	512 (2^9)	256 (2^8)	128 (2^7)	—	32 (2^5)	—	—	4 (2^2)	2 (2^1)	1 (2^0)
Value	——	—	—	0/1	0/1	0/1	—	0/1	—	—	0/1	0/1	0/1

Value : 1 = Measurement Event Set
0 = Measurement Event Cleared

Events : BFL = Buffer Full
BHF = Buffer Half Full
BAV = Buffer Available
RAV = Reading Available
HL = High Limit
LL = Low Limit
ROF = Reading Overflow

Questionable Event Register:

Bits B0 through B3 — Not used.

Bit B4, Temperature Summary (Temp) — Set bit indicates that an invalid reference junction measurement has occurred for thermocouple temperature measurements.

Bits B5, B6 and B7 — Not used.

Bit B8, Calibration Summary (Cal) — Set bit indicates that an invalid calibration constant was detected during the power-up sequence. The instrument will instead use a default calibration constant. This error will clear after successful calibration of the instrument.

Bits B9 through B13 — Not used.

Bit B14, Command Warning (Warn) — Set bit indicates that a Signal Oriented Measurement Command parameter has been ignored.

NOTE *Whenever a questionable event occurs, the ERR annunciator will turn on. The annunciator will turn off when the questionable event clears.*

Figure 5-5 *Questionable event register*

Bit Position	B15	B14	B13 - B9	B8	B7 - B5	B4	B3 - B0
Event	—	Warn	——	Cal	——	Temp	——
Decimal Weighting	—	16384 (2^{14})	——	256 (2^{8})	——	16 (2^{4})	——
Value	0	0/1	——	0/1	——	0/1	——

Value : 1 = Questionable Event Bit Set
0 = Questionable Event Bit Cleared

Events : Warn = Command Warning
Cal = Calibration Summary
Temp = Temperature Summary

Operation Event Register:

Bits B0 through B3 — Not used.

Bit B4, Measuring (Meas) — Set bit indicates that the instrument is performing a measurement.

Bit B5, Triggering (Trig) — Set bit indicates that the instrument is in the Device Action block of the Trigger Model.

Bits B6 through B9 — Not used.

Bit B10, Idle — Set bit indicates that the instruments in the idle state.

Bits B11 through B15 — Not used.

Figure 5-6
Operation event register

Bit Position	B15	B14 - B12	B11	B10	B9	B8	B7	B6	B5	B4	B3	B2	B1	B0
Event	—	——	—	Idle	—	—	—	—	Trig	Meas	—	—	—	—
Decimal Weighting	—	——	—	1024 (2^{10})	—	—	—	—	32 (2^5)	16 (2^4)	—	—	—	—
Value	0	——	—	0/1	—	—	—	—	0/1	0/1	—	—	—	—

Value : 1 = Operation Event Set
0 = Operation Event Cleared

Events : Idle = Idle state of the 2000
Trig = Triggering
Meas = Measuring

:ENABle command

:ENABle <Nrf>

:STATus:MEASurement:ENABle <NRf> — **Program Measurement Event Enable Register**
:STATus:QUEStionable:ENABle <NRf> — **Program Questionable Event Enable Register**
:STATus:OPERation:ENABle <NRf> — **Program Operation Event Enable Register**

Parameters

<NRf> =	0	Clear register	<NRf> =	128	Set bit B7
	1	Set bit B0		256	Set bit B8
	2	Set bit B1		512	Set bit B9
	4	Set bit B2		1024	Set bit B10
	16	Set bit B4		16384	Set bit B14
	32	Set bit B5		65535	Set all bits
	64	Set bit B6			

Query :ENABle? Query enable register

Description These commands are used to set the contents of the event enable registers (see Figures 5-7, 5-8 and 5-9). An :ENABle command is sent with the decimal equivalent of the binary value that determines the desired state (0 or 1) of each bit in the appropriate register.

Each event enable register is used as a mask for events (see [:EVENt] for descriptions of events). When a bit in an event enable register is cleared (0), the corresponding bit in the event register is masked and thus, cannot set the corresponding summary bit of the next register set in the status structure. Conversely, when a bit in an event enable register is set (1), the corresponding bit in the event register is unmasked. When the unmasked bit in the event register sets, the summary bit of the next register set in the status structure will set.

The decimal weighting of the bits for each event enable register are included in Figures 5-7, 5-8 and 5-9. The sum of the decimal weights of the bits that you wish to set is sent as the parameter (<NRf>) for the appropriate :ENABle command. For example, to set the BFL and RAV bits of the Measurement Event Enable Register, send the following command:

:stat:meas:enab 544

where; BFL (bit B9) = Decimal = 512
RAV (bit B5) = Decimal = 32
<NRf> = 544

Figure 5-7
Measurement event enable register

Bit Position	B15 - B12	B11	B10	B9	B8	B7	B6	B5	B4	B3	B2	B1	B0
Event	——	—	—	BFL	BHF	BAV	—	RAV	—	—	HL	LL	ROF
Decimal Weighting	——	—	—	512 (2^9)	256 (2^8)	128 (2^7)	—	32 (2^5)	—	—	4 (2^2)	2 (2^1)	1 (2^0)
Value	——	—	—	0/1	0/1	0/1	—	0/1	—	—	0/1	0/1	0/1

Value : 1 = Enable Measurement Event
0 = Disable (Mask) Measurement Event

Events : BFL = Buffer Full
BHF = Buffer Half Full
BAV = Buffer Available
RAV = Reading Available
HL = High Limit
LL = Low Limit
ROF = Reading Overflow

Figure 5-8
Questionable event enable register

Bit Position	B15	B14	B13 - B9	B8	B7 - B5	B4	B3 - B0
Event	—	Warn	——	Cal	——	Temp	——
Decimal Weighting	—	16384 (2^{14})	——	256 (2^8)	——	16 (2^4)	——
Value	0	0/1	——	0/1	——	0/1	——

Value : 1 = Enable Questionable Event
0 = Disable (Mask) Questionable Event

Events : Warn = Command Warning
Cal = Calibration Summary
Temp = Temperature Summary

Figure 5-9
Operation event enable register

Bit Position	B15 - B11	B10	B9	B8	B7	B6	B5	B4	B3	B2	B1	B0
Event	——	Idle	—	—	—	—	Trig	Meas	—	—	—	—
Decimal Weighting	——	1024 (2^{10})	—	—	—	—	32 (2^5)	16 (2^4)	—	—	—	—
Value	——	0/1	—	—	—	—	0/1	0/1	—	—	—	—

Value : 1 = Enable Operation Event
0 = Disable (Mask) Operation Event

Events : Idle = Idle state of the 2000
Trig = Triggering
Meas = Measuring

:CONDition? command

:CONDition?

:STATus:MEASurement:CONDition?	**Read Measurement Condition Register**
:STATus:QUEStionable:CONDition?	**Read Questionable Condition Register**
:STATus:OPERation:CONDition?	**Read Operation Condition Register**

Description These query commands are used to read the contents of the condition registers. Each set of event registers (except the Standard Event register set) has a condition register. A condition register is similar to its corresponding event register, except that it is a real-time register that constantly updates to reflect the current operating status of the instrument. See [:EVENt] for register bit descriptions.

After sending one of these commands and addressing the Model 2000 to talk, a decimal value is sent to the computer. The binary equivalent of this decimal value indicates which bits in the register are set.

For example, if sending :stat:meas:cond? returns a decimal value of 512 (binary 0000001000000000), bit B9 of the Measurement Condition Register is set indicating that the trace buffer is full.

:PRESET command

:PRESET

:STATUS:PRESET	**Return registers to default conditions**

Description When this command is sent, the SCPI event registers are affected as follows:

All bits of the following registers are cleared to zero (0):

- Questionable Event Enable Register.
- Measurement Event Enable Register.
- Operation Event Enable Register

NOTE *Registers not included in the above list are not affected by this command.*

:QUEue commands

[:NEXT]?

:STATus:QUEue[:NEXT]? **Read Error Queue**

Description As error and status messages occur, they are placed into the Error Queue. This query command is used to read those messages.

The Error Queue is a first-in, first-out (FIFO) register. Every time you read the queue, the "oldest" message is read and that message is then removed from the queue. The queue will hold up to 10 messages. If the queue becomes full, the message "350, 'Queue Overflow" will occupy the last memory location in the register. On power-up, the Error Queue is empty. When the Error Queue is empty, the message "0, 'No error" is placed in the Error Queue.

The messages in the queue are preceded by a number. Negative (-) numbers are used for SCPI defined messages, and positive (+) numbers are used for Keithley defined messages. The messages are listed in Appendix B.

After this command is sent and the Model 2000 is addressed to talk, the "oldest" message in the queue is sent to the computer.

NOTE *The :STATus:QUEue[:NEXT]? query command performs the same function as the :SYSTem:ERRor? query command (see System subsystem).*

:CLEar

:STATus:QUEue:CLEar **Clear Error Queue**

Description This action command is used to clear the Error Queue of messages.

:ENABle <list>

:STATus:QUEue:ENABle <list> **Enable messages for Error Queue**

Parameter <list> = (numlist)

where numlist is a specified list of messages that you wish to enable for the Error Queue.

Query :ENABle? Query list of enabled messages

Description On power-up, all error messages are enabled and will go into the Error Queue as they occur. Status messages are not enabled and will not go into the queue. This command is used to specify which messages you want enabled. Messages not specified will be disabled and prevented from entering the queue.

When this command is sent, all messages will first be disabled, then the messages specified in the list will be enabled. Thus, the returned list (:ENABle?) will contain all the enabled messages.

Messages are specified by numbers (see Appendix B). The following examples show various forms for expressing a message numlist:

Numlist =	-110	Single message.
	-110, -140, -222	Messages separated by commas.
	-110:-222	Range of messages (- 110 through - 222).
	-110:-222, -230	Range entry and single entry separated by a comma.

NOTE *To disable all messages from entering the Error Queue, send the following command:*

:stat:que:enab ()

:DISable <list>

:STATus:QUEue:DISable <list> **Disable messages for Error Queue**

Parameter <list> = (numlist)

where numlist is a specified list of messages that you wish to disable for the Error Queue.

Query :DISable? Query list of disabled messages

Description On power-up, all error messages are enabled and will go into the Error Queue as they occur. Status messages are not enabled and will not go into the queue. This command is used to specify which messages you want disabled. Disabled messages are prevented from going into the Error Queue.

Messages are specified by numbers (see Appendix B). See :QUEue:ENABle for examples to express a numlist.

:SYSTem subsystem

The SYSTem subsystem contains miscellaneous commands that are summarized in Table 5-8.

:BEEPer command

[:STATe] <b>

:BEEPer[:STATe] <b> **Enable or disable beeper**

Parameters <b> = 1 or ON Enable beeper
0 or OFF Disable beeper

Query [:STATe]? Query state of beeper

Description This command is used to enable or disable the beeper for limit tests.

:PRESet command

:PRESet

:SYSTem:PRESet **Return to :SYSTem:PRESet defaults**

Description This command returns the instrument to states optimized for front panel operation. :SYSTem:PRESet defaults are listed in the SCPI tables (Tables 5-2 through 5-11).

:KCLick command

:KCLick <b>

:SYSTem:KCLick <b> Enable or disable keyclick

Parameters <b> = 1 or ON Enable keyclick (default)
0 or OFF Disable keyclick

Query KCLick? Query status of keyclick

Description This command is used to enable or disable the keyclick. The keyclick can also be enabled or disabled from the front panel by pressing SHIFT then LOCAL.

:POSetup <name> command

:POSetup <name>

:SYSTem:POSetup <name> **Program power-on defaults**

Parameters

<name> =	RST	Select *RST defaults on power up
	PRESet	Select :SYSTem:PRESet defaults on power up
	SAV0	Select saved defaults on power up

Query :POSetup? Query power-on setup

Description This command is used to select the power-on defaults. With RST selected, the instrument powers up to the *RST default conditions. With PRES selected, the instrument powers up to the :SYStem:PRESet default conditions. Default conditions are listed in the SCPI tables (Tables 5-2 through 5-11).

With the SAV0 parameter selected, the instrument powers-on to the setup that is saved in the specified location using the *SAV command.

:FRSWitch? command

:FRSWitch?

:SYSTem:FRSWitch? **Read INPUTS switch**

Description This query command is used to read the position of the FRONT/REAR INPUTS switch. Switch position code is defined as follows:

1 = Front panel inputs selected
0 = Rear panel inputs selected

:VERSion? command

:VERsion?

:SYSTem:VERSion? **Read SCPI version**

Description This query command is used to read the version of the SCPI standard being used by the Model 2000. Example code:

1991.0

The above response message indicates the version of the SCPI standard.

:ERRor? command

:ERRor?

:SYSTem:ERRor? **Read Error Queue**

Description As error and status messages occur, they are placed into the Error Queue. This query command is used to read those messages. The Error Queue is a first-in, first-out (FIFO) register that can hold up to 10 messages. Every time you read the queue, the "oldest" message is read and that message is then removed from the queue.

If the queue becomes full, the message "350, Queue Overflow" occupies the last memory location in the register On power-up, the queue is empty. When the Error Queue is empty, the message "0, No error" is placed in the Error Queue.

The messages in the queue are preceded by a number. Negative (-) numbers are used for SCPI defined messages, and positive (+) numbers are used for Keithley defined messages. Appendix B lists the messages.

NOTE *The :SYSTem:ERRor? query command performs the same function as the :STATus:QUEue? query command (see STATus subsystem).*

:AZERo commands

:STATe <b>

:SYSTem:AZERo:STATe <b> **Control autozero**

Parameters

<b> =	1 or ON	Enable autozero
	0 or OFF	Disable autozero

Query

:STATe?	Query state of autozero

Description

This command is used to disable or enable autozero. When enabled, accuracy is optimized. When disabled, speed is increased at the expense of accuracy.

Important Note: Before you can enable or disable auto-zero, the Model 2000 must first be in the idle state. The Model 2000 can be placed in the idle state by first disabling continuous initiation (:INITiate:CONTinuous OFF), and then sending the :ABORt command. After sending the :STATe command, readings can be re-started by sending :INITiate:CONTinuous ON or :INITiate.

Program

```
PRINT #1, "output 16; :init:cont off; :abor"        'Place 2000 in idle
PRINT #1, "output 16; :syst:azer:stat off; stat?"   ' Disable autozero
PRINT #1, "enter 16"                                ' Get response from 2000
LINE INPUT #2, a$                                   ' Read response
PRINT a$                                            ' Display response
PRINT #1, "output 16; :init:cont on"                'Take 2000 out of idle
```

NOTE *When finished, be sure to re-enable autozero.*

:CLEar command

:CLEar

:SYSTem:CLEar **Clear Error Queue**

Description

This action command is used to clear the Error Queue of messages.

:KEY <NRf> command

:SYSTem:KEY <NRf> **Simulate key-press**

Parameters

<NRf> =	1	SHIFT key	<NRf> =	17	LOCAL key
	2	DCV key		18	EX TRIG key
	3	ACV key		19	TRIG key
	4	DCI key		20	STORE key
	5	ACI		21	RECALL key
	6	Ω2 key		22	FILTER key
	7	Ω4 key		23	REL key
	8	FREQ key		24	left arrow key
	9	—		25	—
	10	—		26	OPEN key
	11	up arrow key		27	CLOSE key
	12	AUTO key		28	STEP key
	13	down arrow key		29	SCAN key
	14	ENTER key		30	DIGITS key
	15	right arrow key		31	RATE key
	16	TEMP key		32	EXIT key

Query :KEY? Query last “pressed” key.

Description This command is used to simulate front panel key presses. For example, to select DCV you can send the following command to simulate pressing the DCV key:

:syst:key 2

The parameter listing provides the key-press code in numeric order. Figure 5-10 also illustrates the key-press codes.

The queue for the :KEY? query command can only hold one key-press. When :KEY? is sent over the bus, and the Model 2000 is addressed to talk, the key-press code number for the last key pressed (either physically or with :KEY) is sent to the computer.

Figure 5-10
Key-press codes

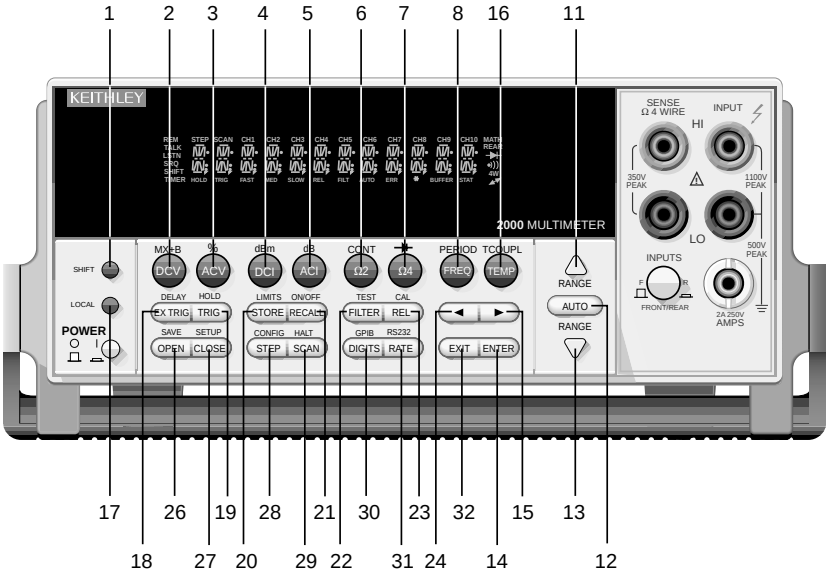

RS-232 interface commands

:LOCal

:SYSTem:LOCal **Take 2000 out of remote**

Description Normally, the Model 2000 is in local during RS-232 communications. In this state, front panel keys are operational. However, the user may wish to lock out front keys during RS-232 communications (see :RWLock).

This action command isu sed to take the Model 2000 out of the remote state and enables the operation of front panel keys. Note that this command can only be sent over the RS-232 interface.

:REMote

:SYSTem:REMote **Place the Model 2000 in remote**

Description This action command is used to place the Model 2000 in the remote state. In remote, the front panel keys will be locked out if local lockout is asserted (see :RWLock). Note that this command can only be sent over the RS-232 interface.

:RWLock

:SYSTem:RWLock **Disable front panel keys**

Description This action command is used to disable front panel controls (local lockout) during RS-232 operation.

Taking the instrument out of remote (see :LOCal) restores front panel keys operation. Note that this command can only be sent over the RS-232 interface.

Line frequency query

:LFRequency?

:SYSTem:LFRequency? **Query line frequency**

Description This query returns the frequency of the power line from which the unit is operating. The power line frequency is automatically sensed upon power-up.

:TRACe subsystem

The commands in this subsystem are used to configure and control data storage into the buffer. The commands are summarized in Table 5-9.

:TRACe | :DATA

The bar (|) indicates that :TRACe or :DATA can be used as the root command for this subsystem. From this point on, the documentation in this manual uses :TRACe. If you prefer to use :DATA, simply replace all the :TRACe command words with :DATA.

:CLEar command

:CLEar

:TRACe:CLEar **Clear buffer**

Description This action command is used to clear the buffer of readings. If you do not clear the buffer, a subsequent store will overwrite the old readings. If the subsequent store is aborted before the buffer becomes full, you could end up with some “old” readings still in the buffer.

:FREE? command

:FREE?

:TRACe:FREE? **Read status of memory**

Description This command is used to read the status of storage memory. After sending this command and addressing the Model 2000 to talk, two values separated by commas are sent to the computer. The first value indicates how many bytes of memory are available, and the second value indicates how many bytes are reserved to store readings.

:POINts command

:POINts <NRf>

:TRACe:POINts <NRf> **Specify buffer size**

Parameter <n> = 2 to 1024

Query :POINts? Query the buffer size

Description This command is used to specify the size of the buffer.

:FEED command

:FEED <name>

:TRACe:FEED <name> **Specify readings source**

Parameters

<name> =	SENSe[1]	Put raw readings in buffer
	CALCulate[1]	Put calculated readings in buffer
	NONE	Put no readings in buffer

Query :FEED? Query buffer feed

Description This command is used to select the source of readings to be placed in the buffer. With SENSe[1] selected, raw readings are placed in the buffer when storage is performed. With CALCulate[1] selected, calculated math readings (mx+b or PERCent or NONE) are placed in the buffer.

With NONE selected, no readings are placed in the buffer when storage is performed over the bus.

:CONTrol <name>

:TRACe:FEED:CONTrol <name> **Specify buffer control**

Parameters

<name> =	NEVer	Disables buffer storage
	NEXT	Fills buffer and stops

Query :CONTrol? Query buffer control

Description This command is used to select the buffer control. With NEVer selected, storage into the buffer is disabled. With either of the other selections, storage is performed as long as buffer feed is not set for NONE (see :TRACe:FEED NONE). When NEXT is selected, the storage process starts, fills the buffer and then stops. The buffer size is specified by the :POINts command.

:DATA? command

:DATA?

:TRACe:DATA? **Send buffer readings**

Description When this command is sent and the Model 2000 is addressed to talk, all the readings stored in the buffer are sent to the computer. The format that readings are sent over the bus is controlled by the :FORMat subsystem.

Trigger subsystem

The Trigger subsystem is made up of a series of commands and subsystems to configure the Trigger Model. These commands and subsystems are summarized in Table 5-10.

:INITiate commands

[:IMMediate]

:INITiate[:IMMediate] **Take 2000 out of idle state**

Description This command takes the Model 2000 out of the idle state. After all programmed operations are completed, the instrument returns to the idle state if continuous initiation is disabled; (see next command).

:CONTinuous <b>

:INITiate:CONTinuous <b> **Control continuous initiation**

Parameters <b> = 0 or OFF Disable continuous initiation
1 or ON Enable continuous initiation

Query :CONTinuous? Query continuous initiation

Description When continuous initiation is selected (ON), the instrument is taken out of the idle state. At the conclusion of all programmed operations, the instrument returns to the top of the trigger model.

NOTE: *With continuous initiation enabled (ON), you cannot use the :READ? command or set sample count greater than one (see :SAMPle:COUNt).*

:ABORt command

:ABORt Abort operation

Description When this action command is sent, the Model 2000 aborts operation and returns to the top of the Trigger Model. If continuous initiation is disabled, the instrument goes to the idle state. If continuous initiation is enabled, operation continues at the top of the trigger model.

The abort command resets the scan pointer back to the first channel in the scan list.

:TRIGger commands

:COUNt <n>

:TRIGger[:SEQuence[1]]:COUNt <n> **Set measure count**

Parameters

<n> =	1 to 9999	Specify count
	INF	Sets count to infinite
	DEFault	Sets count to 1
	MINimum	Sets count to 1
	MAXimum	Sets count to 9999

Query

:COUNt?	Queries programmed count
:COUNt? DEFault	Queries *RST default count
:COUNt? MINimum	Queries lowest allowable count
:COUNt? MAXimum	Queries largest allowable count

Description

This command is used to specify how many times operation loops around in the trigger operation. For example, if the count is set to 10, operation continues to loop around until 10 device actions are performed. After the 10th action, operation proceeds back up to the start of the trigger model. Note that each loop places operation at the control source where it waits for the programmed event.

:DELay <n>

:TRIGger[:SEQuence[1]]:DELay <n> **Set trigger model delay**

Parameters

<n> =	0 to 999999.999	Specify delay in seconds
	DEFault	0 second delay
	MINimum	0 second delay
	MAXimum	999999.999 second delay

Query

:DELay?	Query the programmed delay
:DELay? DEFault	Query the *RST default delay
:DELay? MINimum	Query the lowest allowable delay
:DELay? MAXimum	Query the largest allowable delay

Description

The delay is used to delay operation of the trigger model. After the programmed event occurs, the instrument waits until the delay period expires before performing the Device Action in the Trigger Model.

The delay time can also be set by using the AUTO parameter. If AUTO is set to 1 or on, the delay period is enabled and will occur. If AUTO is set to 0 or off, the delay period is not enabled and no delay will occur.

:SOURce <name>

:TRIGger[:SEQuence[1]]:SOURce <name> **Specify measure event control source**

Parameters

<name> =	IMMediate	Pass over through immediately
	EXTernal	Select External Triggering as event
	TIMer	Select timer as event
	MANual	Select manual event
	BUS	Select bus trigger as event

Query

:SOURce? Query programmed control source.

Description

These commands are used to select the event control source. With IMMediate selected (do not confuse :SOURce IMMediate with :INITiate:IMMediate), operation immediately starts.

A specific event can be used to control operation. With EXTernal selected, operation continues when an External Trigger is received.

With TIMer selected, the event occurs at the beginning of the timer interval, and every time it times out. For example, if the timer is programmed for a 30 second interval, the first pass through the control source occurs immediately. Subsequent scan events will then occur every 30 seconds. The interval for the timer is set using the :TIMer command.

With MANual selected, the event occurs when the TRIG key is pressed.

With BUS selected, the event occurs when a GET or *TRG command is sent over the bus.

:TIMer <n>

:TRIGger:[SEQuence[1]]:TIMer <n> **Set interval for measure layer timer**

Parameters <n> = 0.001 to 999999.999 Specify timer interval in seconds
Query :TIMer? Query programmed timer interval

Description These commands are used to set the interval for the timer. Note that the timer is in effect only if the timer is the selected control source.

:SIGNal

:TRIGger[:SEQuence[1]]:SIGNal **Bypass measure control source**

Description This action command is used to bypass the specified control source when you do not wish to wait for the programmed event. Keep in mind that the instrument must be waiting for the appropriate event when the command is sent. Otherwise, an error occurs and this command is ignored.

:SAMPle Command

:SAMPle:COUNt <NRf> **Set sample count**

Parameter <NRf> = 1 to 1024

Query :COUNt? Query the sample count

Description This command specifies the sample count. The sample count defines how many times operation loops around in the trigger model to perform a device action.

NOTE *If sample count is >1, you cannot use the :READ? command if there are readings stored in the buffer.*

:UNIT subsystem

The UNIT subsystem is used to configure and control the measurement units for TEMP, ACV, and DCV, and is summarized in Table 5-11.

:TEMPerature command

:TEMPerature <name>

:UNIT:TEMPerature <name> — **Specify TEMP units**

Parameters

<name> =	C or CEL	°C temperature units
	F or FAR	°F temperature units
	K	K temperature units

Query TEMPerature? Query temperature units

Description This command is used to specify the units for temperature measurements.

:VOLTage commands

:AC <name>

:UNIT:VOLTage:AC <name> — **Specify ACV units**

Parameters

<name> =	V	AC voltage measurement units
	DB	dB AC voltage measurement units
	DBM	dBm AC voltage measurement units

Query :AC? Query AC voltage units

Description This command is used to select the units for ACV measurements. With volt (V) units selected, normal AC voltage measurements are made for the ACV function. With DB units selected, AC dB voltage measurements are performed. The DBM units selection is used to make decibel measurements referenced to 1mW. dB and dBm measurements are explained further in Section 2.

:DB:REFerence <n>

:UNIT:VOLTage:AC:DB:REFerence <n> **Specify dBm reference**

Parameter <n> = le-7 to 1000 Specify reference in volts

Query :REFerence?

Description This command is used to specify the dB reference level. When DB units is selected (:VOLTage:AC: DB), ACV db measurements are made using the specified dB reference level.

The reference level is specified in volts and is not range dependent. For example, a dB reference level of 1 is 1V on all ACV measurement ranges.

:DBM:IMPedance <n>

:UNIT:VOLTage:AC:DBM:IMPedance <n> **Specify dB reference**

Parameter <n> = 1 to 9999 Specify reference impedance

Query :IMPedance?

Description This command is used to specify the dBm reference impedance level. When dBm units is selected ACV dBm measurements are made using the specified dBm reference impedance.

The reference impedance is specified in ohms and is not range dependent. For example, a dBm reference level of 600 is 600 on all ACV measurement ranges. A rational number is rounded to the nearest valid integer value.

[:DC] <name>

:UNIT:VOLTage:DC <name> **Specify DCV units**

Parameters <name> =

V	DC voltage measurement units
DB	dB DC voltage measurement units
DBM	dBm DC voltage measurement units

Query [:DC]? Query DC voltage units

Description This command is used to select the units for DCV measurements. With volt (V) units selected, normal DC voltage measurements are made for the DCV function. With DB units selected, DC dB voltage measurements are performed. The DBM units selection is used to make decibel measurements referenced to 1mW. dB and dBm measurements are explained further in Section 2.

:DB:REFerence <n>

:UNIT:VOLTage[:DC]:DB:REFerence <n> **Specify dBm reference**

Parameter <n> = 1e-7 to 1000 Specify reference in volts

Query :REFerence?

Description This command is used to specify the dB reference level. When DB units is selected (:VOLTage[:DC]:DB), DCV dB measurements are made using the specified dB reference level.

The reference level is specified in volts and is not range dependent. For example, a dB reference level of 1 is 1V on all DCV measurement ranges.

:DBM:IMPedance <n>

:UNIT:VOLTage[:DC]:DBM:IMPedance <n> **Specify dB reference**

Parameters <n> = 1 to 9999 Specify reference impedance

Query :IMPedance?

Description This command is used to specify the dBm reference impedance level. When dBm units is selected, DCV dBm measurements are made using the specified dBm reference impedance.

The reference impedance is specified in ohms and is not range dependent. For example, a dBm reference level of 600 is 600 on all DCV measurement ranges. A rational number is rounded to the nearest valid integer value.

A
Specifications

2000 6½-Digit Multimeter Specifications

DC CHARACTERISTICS

CONDITIONS: **MED (1 PLC)[1] or SLOW (10 PLC) or MED (1 PLC) with filter of 10**

ACCURACY: **±(ppm of reading + ppm of range) (ppm = parts per million) (e.g., 10ppm = 0.001%)**

Function	Range	Resolution	Test Current Or Burden Voltage (±5%)	Input Resistance	24 Hour[14] 23°C ±1°	90 Day 23°C ±5°	1 Year 23°C ±5°	Temperature Coefficient 0°-18°C & 28°-50°C
Voltage	100.0000 mV	0.1 µV		> 10 GΩ	30 + 30	40 + 35	50 + 35	2 + 6
	1.000000 V	1.0 µV		> 10 GΩ	15 + 6	25 + 7	30 + 7	2 + 1
	10.00000 V	10 µV		> 10 GΩ	15 + 4	20 + 5	30 + 5	2 + 1
	100.0000 V	100 µV		10 MΩ ±1%	15 + 6	30 + 6	45 + 6	5 + 1
	1000.000 V[9]	1 mV		10 MΩ ±1%	20 + 6	35 + 6	45 + 6	5 + 1
Resistance[15]	100.0000 Ω	100 µΩ	1 mA		30 + 30	80 + 40	100 + 40	8 + 6
	1.000000 kΩ	1 mΩ	1 mA		20 + 6	80 + 10	100 + 10	8 + 1
	10.00000 kΩ	10 mΩ	100 µA		20 + 6	80 + 10	100 + 10	8 + 1
	100.0000 kΩ	100 mΩ	10 µA		20 + 6	80 + 10	100 + 10	8 + 1
	1.000000 MΩ[16]	1 Ω	10 µA		20 + 6	80 + 10	100 + 10	8 + 1
	10.00000 MΩ[11, 16]	10 Ω	700 nA	// 10M Ω	150 + 6	200 + 10	400 + 10	70 + 1
	100.0000 MΩ[11, 16]	100 Ω	700 nA	// 10M Ω	800 + 30	1500 + 30	1500 + 30	385 + 1
Current	10.00000 mA	10 nA	< 0.15 V		60 + 30	300 + 80	500 + 80	50 + 5
	100.0000 mA	100 nA	< 0.03 V		100 + 300	300 + 800	500 + 800	50 + 50
	1.000000 A	1 µA	< 0.3 V		200 + 30	500 + 80	800 + 80	50 + 5
	3.00000 A	10 µA	< 1 V		1000 + 15	1200 + 40	1200 + 40	50 + 5
Continuity 2W	1 kΩ	100 mΩ	1 mA		40 + 100	100 + 100	120 + 100	8 + 1
Diode Test	3.00000 V	10 µV	1 mA		20 + 6	30 + 7	40 + 7	8 + 1
	10.00000 V	10 µV	100 µA		20 + 6	30 + 7	40 + 7	8 + 1
	10.00000 V	10 µV	10 µA		20 + 6	30 + 7	40 + 7	8 + 1

2000 6½-Digit Multimeter Specifications

DC Operating Characteristics[2]

Function	Digits	Readings/s	PLCs[8]
DCV (all ranges),	6½[3, 4]	5	10
DCI (all ranges),	6½[3, 7]	30	1
and Ohms	6½[3, 5]	50	1
(<10M range)	5½[3, 5]	270	0.1
	5½[5]	500	0.1
	5½[5]	1000	0.04
	4½[5]	2000	0.01

DC System Speeds[2, 6]

RANGE CHANGE[3]: 50/s.
FUNCTION CHANGE[3]: 45/s.
AUTORANGE TIME [3, 10]: <30 ms.
ASCII READINGS TO RS-232 (19.2k BAUD): 55/s.
MAX. INTERNAL TRIGGER RATE: 2000/s.
MAX. EXTERNAL TRIGGER RATE: 500/s.

DC General

LINEARITY OF 10VDC RANGE: ±(2ppm of reading + 1ppm of range).

DCV, Ω, TEMPERATURE, CONTINUITY, DIODE TEST INPUT PROTECTION: 1000V, all ranges.

MAXIMUM 4WΩ LEAD RESISTANCE: 10% of range per lead for 100Ω and 1kΩ ranges; 1kΩ per lead for all other ranges.

DC CURRENT INPUT PROTECTION: 3A, 250V fuse.

SHUNT RESISTOR: 0.1Ω for 3A, 1A and 100mA ranges. 10Ω for 10mA range.

CONTINUITY THRESHOLD: Adjustable 1Ω to 1000Ω.

AUTOZERO OFF ERROR: Add ±(2ppm of range error + 5µV) for <10 minutes and ±1°C change.

OVERRANGE: 120% of range except on 1000V, 3A and Diode.

Speed and Noise Rejection

Rate	Readings/s	Digits	RMS Noise 10V Range	NMRR[12]	CMRR[13]
10 PCL	5	6½	< 1.5 µV	60 dB	140 dB
1 PCL	50	6½	< 4 µV	60 dB	140 dB
0.1 PCL	500	5½	< 22 µV	–	80 dB
0.01 PCL	2000	4½	< 150 µV	–	80 dB

DC Notes

[1] Add the following to "ppm of range" uncertainty:1V and 100V, 2ppm; 100mV, 15ppm; 100Ω, 15ppm; <1MΩ, 2ppm; 10mA and 1A, 10ppm; 100mA, 40ppm.
[2] Speeds are for 60 Hz operation using factory default operating conditions (*RST). Autorange off, Display off, Trigger delay = 0.
[3] Speeds include measurement and binary data transfer out the GPIB.
[4] Auto zero off.
[5] Sample count = 1024, auto zero off.
[6] Auto zero off, NPLC = 0.01.
[7] Ohms = 24 readings/second.
[8] 1 PLC = 16.67ms @ 60Hz, 20ms @ 50Hz/400Hz. The frequency is automatically determined at power up.
[9] For signal levels >500V, add 0.02ppm/V uncertainty for the portion exceeding 500V.
[10] Add 120ms for ohms.
[11] Must have 10% matching of lead resistance in Input HI and LO.
[12] For line frequency ±0.1%.
[13] For 1kΩ unbalance in LO lead.
[14] Relative to calibration accuracy.
[15] Specifications are for 4-wire ohms. For 2-wire ohms, add 1Ω additional uncertainty.
[16] For rear inputs, add the following to Temperature Coefficient "ppm of reading" uncertainty: 10MΩ 70ppm, 100MΩ 385ppm. Operating environment specified for 0° to 50°C and 50% RH at 35°C.

2000 6½-Digit Multimeter Specifications

TRUE RMS AC VOLTAGE AND CURRENT CHARACTERISTICS

ACCURACY[1]: ±(% of reading + % of range), 23°C ±5 °C

Voltage Range	Resolution	Calibration Cycle	3 Hz-10 Hz	10 Hz-20 kHz	20 kHz-50 kHz	50 kHz-100 kHz	100 kHz-300 kHz
100.0000 mV	0.1 µV						
1.000000 V	1.0 µV	90 Days	0.35 + 0.03	0.05 + 0.03	0.11 + 0.05	0.60 + 0.08	4 + 0.5
10.00000 V	10 µV						
100.0000 V	100 µV	1 Year	0.35 + 0.03	0.06 + 0.03	0.12 + 0.05	0.60 + 0.08	4 + 0.5
750.000 V	1 mV						
		Temperature Coefficient/°C[8]	0.035 + 0.003	0.005 + 0.003	0.006 + 0.005	0.01 + 0.006	0.03 + 0.01

Current Range	Resolution	Calibration Cycle	3 Hz-10 Hz	10 Hz-5 kHz
1.000000 A	1 µA	90 Day/1 Year	0.30 + 0.04	0.10 + 0.04
3.00000[9] A	10 µA	90 Day/1 Year	0.35 + 0.06	0.15 + 0.06
		Temperature Coefficient/°C[8]	0.035 + 0.006	0.015 + 0.006

High Crest Factor Additional Error ±(% of reading)[7]

CREST FACTOR:	1–2	2–3	3–4	4–5
ADDITIONAL ERROR:	0.05	0.15	0.30	0.40

AC Operating Characteristics[2]

Function	Digits	Readings/s	Rate	Bandwidth
ACV (all ranges), and ACI (all ranges)	6½[3]	2s/reading	SLOW	3 Hz-300kHz
	6½[3]	1.4	MED	30 Hz-300kHz
	6½[4]	4.8	MED	30 Hz-300kHz
	6½[3]	2.2	FAST	300 Hz-300kHz
	6½[4]	35	FAST	300 Hz-300kHz

Additional Low Frequency Errors ±(% of reading)

	SLOW	MED	FAST
20Hz - 30Hz	0	0.3	—
30Hz - 50Hz	0	0	—
50Hz - 100Hz	0	0	1.0
100Hz - 200Hz	0	0	0.18
200Hz - 300Hz	0	0	0.10
> 300Hz	0	0	0

AC System Speeds[2, 5]

FUNCTION/RANGE CHANGE[6]: 4/s.
AUTORANGE TIME: <3 s.
ASCII READINGS TO RS-232 (19.2k BAUD)[4]: 50/s.
MAX. INTERNAL TRIGGER RATE[4]: 300/s.
MAX. EXTERNAL TRIGGER RATE[4]: 300/s.

AC General

INPUT IMPEDANCE: 1MΩ ±2% paralleled by <100pF.
ACV INPUT PROTECTION: 1000Vp.
MAXIMUM DCV: 400V on any ACV range.
ACI INPUT PROTECTION: 3A, 250V fuse.
BURDEN VOLTAGE: 1A Range: <0.3V rms. 3A Range: <1V rms.
SHUNT RESISTOR: 0.1Ω on all ACI ranges.
AC CMRR: >70dB with 1kΩ in LO lead.
MAXIMUM CREST FACTOR: 5 at full scale.
VOLT HERTZ PRODUCT: $\leq 8 \times 10^7$ V·Hz.
OVERRANGE: 120% of range except on 750V and 3A ranges.

AC Notes

[1] Specifications are for SLOW rate and sinewave inputs >5% of range.
[2] Speeds are for 60 Hz operation using factory default operating conditions (*RST). Auto zero off, Auto range off, Display off, includes measurement and binary data transfer out the GPIB.
[3] 0.01% of step settling error. Trigger delay = 400ms.
[4] Trigger delay = 0.
[5] DETector:BANDwidth 300, NPLC = 0.01.
[6] Maximum useful limit with trigger delay = 175ms.
[7] Applies to non-sinewaves >5Hz.
[8] Applies to 0°–18°C and 28°–50°C.
[9] For signal levels > 2.2A, add additional 0.4% to "of reading" uncertainty.

2000 6½-Digit Multimeter Specifications

FREQUENCY AND PERIOD CHARACTERISTICS[1, 2]

ACV Range	Frequency Range	Period Range	Gate Time	Resolution ±(ppm of reading)	Accuracy 90 Day/1 Year ±(%of reading)
100 mV to 750 V	3 Hz to 500 kHz	333 ms to 2 µs	1 s (SLOW)	0.3	0.01

Frequency Notes

[1] Specifications are for squarewave inputs >10% of ACV range, except 100mV range. On 100mV range frequency must be >10Hz if voltage is <20mV.

[2] 20% overrange on all ranges except 750V range.

TEMPERATURE CHARACTERISTICS

Thermocouple[2,3,4]			90 Day/1 Year (23°C ±5°C) Accuracy[1]	
Type	Range	Resolution	Relative to Reference Junction	Using 2001-TCSCAN[5]
J	-200 to + 760°C	0.001°C	±0.5°C	±0.65°C
K	-200 to + 1372°C	0.001°C	±0.5°C	±0.70°C
T	-200 to + 400°C	0.001°C	±0.5°C	±0.68°C

Temperature Notes

[1] For temperatures <–100°C, add ±0.1°C and >900°C add ±0.3°C.

[2] Temperature can be displayed in °C, K or °F.

[3] Accuracy based on ITS-90.

[4] Exclusive of thermocouple error.

[5] Specifications apply to channels 2-6. Add 0.06°C/channel from channel 6.

INTERNAL SCANNER SPEED[4]

MAXIMUM INTERNAL SCANNER RATES

RANGE: Channels/s[1]

TRIGGER DELAY = 0

DCV[2]	ACV[2, 3]	2-Wire Ohms[2]	4-Wire Ohms[2]	Temperature[4]
All :110	All : 100	All : 105	<10MΩ : 33	All : 60

Trigger Delay = Auto

DCV[2]	ACV[2, 3]	2-Wire Ohms[2]	4-Wire Ohms[2]	Temperature[4]
0.1V : 105	All : 1.8	100Ω : 85	100Ω : 29	All : 60
1V : 105		1kΩ : 85	1kΩ : 29	
10V : 105		10kΩ : 42	10kΩ : 22	
100V : 70		100kΩ : 28	100kΩ : 18	
1000V : 70		1MΩ : 8	1MΩ : 7	
		10MΩ : 5	10MΩ : 5	
		100MΩ : 3	100MΩ : 3	

Internal Scanner Speed Notes

[1] Speeds are for 60Hz operation using factory default operating conditions (*RST). Auto Zero off, Auto Range off, Display off, sample count = 1024.

[2] NPLC = 0.01.

[3] DETector:BANDwidth 300.

[4] 10-channel card specification. See individual card specifications for options other than 10-channel card.

2000 6½-Digit Multimeter Specifications

TRIGGERING AND MEMORY

READING HOLD SENSITIVITY: 0.01%, 0.1%, 1%, or 10% of reading.

TRIGGER DELAY: 0 to 99 hrs (1ms step size).

EXTERNAL TRIGGER LATENCY: 200µs + <300µs jitter with autozero off, trigger delay = 0.

MEMORY: 1024 readings.

MATH FUNCTIONS

Rel, Min/Max/Average/StdDev (of stored reading), dB, dBm, Limit Test, %, and mX + b with user defined units displayed.

dBm REFERENCE RESISTANCES: 1 to 9999Ω in 1Ω increments.

STANDARD PROGRAMMING LANGUAGES

SCPI (Standard Commands for Programmable Instruments)
Keithley 196/199
Fluke 8840A. 8842A

REMOTE INTERFACE

GPIB (IEEE-488.1, IEEE-488.2) and RS-232C.

GENERAL

POWER SUPPLY: 100V / 120V / 220V / 240V ±10%.

LINE FREQUENCY: 45Hz to 66Hz and 360Hz to 440Hz, automatically sensed at power-up.

POWER CONSUMPTION: 22 VA.

OPERATING ENVIRONMENT: Specified for 0°C to 50°C. Specified to 80% R.H. at 35°C.

STORAGE ENVIRONMENT: -40°C to 70°C.

WARRANTY: 3 years.

EMC: Complies with European Union Directive 89/336/EEC, EN61326-1.

SAFETY: Conforms to European Union Directive 73/23/EEC EN61010-1, CAT II.

VIBRATION: MIL-PRF-28800F Class 3 Random.

WARMUP: 1 hour to rated accuracy.

DIMENSIONS: Rack Mounting: 89mm high × 213mm wide × 370mm deep (3½ in. × 8⅜ in. × 14 9/16 in.).

Bench Configuration (with handle and feet): 104mm high × 238mm wide × 370mm deep (4⅛ in. × 9⅜ in. × 14 9/16 in.).

NET WEIGHT: 2.9kg (6.3 lbs).

SHIPPING WEIGHT: 5kg (11 lbs).

VOLT HERTZ PRODUCT: $\leq 8 \times 10^7$ V·Hz.

Specifications are subject to change without notice.

Accuracy calculations

The information below discusses how to calculate accuracy for both DC and AC characteristics.

Calculating DC characteristics accuracy

DC characteristics accuracy is calculated as follows:

Accuracy = ±(ppm of reading + ppm of range)

(ppm = parts per million, and 10ppm = 0.001%)

As an example of how to calculate the actual reading limits, assume that you are measuring 5V on the 10V range. You can compute the reading limit range from one-year DCV accuracy specifications as follows:

Accuracy = ±(30ppm of reading + 5ppm of range)
±[(30ppm × 5V) + (5ppm × 10V)]
±(150µV + 50µV)
±200µV

Thus, the actual reading range is: 5V± 200µV, or from 4.9998V to 5.0002V

DC current and resistance calculations are performed in exactly the same manner using the pertinent specifications, ranges, and input signal values.

Calculating AC characteristics accuracy

AC characteristics accuracy is calculated similarly, except that AC specifications are given as follows:

Accuracy = ±(% of reading + % of range)

As an example of how to calculate the actual reading limits, assume that you are measuring 120V, 60Hz on the 750V range. You can compute the reading limit range from ACV one-year accuracy specifications as follows:

Accuracy = ±(0.06% of reading + 0.03% of range)
±[(0.0006 × 120V) + (0.0003 × 750V)]
±(0.072V + 0.225V)
±0.297V

In this case, the actual reading range is: 120V ± 0.297V, or from 119.703V to 120.297V

AC current calculations are performed in exactly the same manner using the pertinent specifications, ranges, and input signal values.

Calculating dBm characteristics accuracy

As an example of how to calculate the actual reading limits for a 13dBm measurement with a reference impedance of 50Ω, assume an applied signal 0.998815V. The relationship between voltage and dBm is as follows:

$$\text{dBm} = 10 \log \frac{V_{IN}^2 / R_{REF}}{1\text{mW}}$$

From the previous example on calculating DC characteristics accuracy, it can be shown that 0.998815V has an uncertainty of ±36.96445µV, or 0.998778V to 0.998852V, using one-year specifications of the 1VDC range.

Expressing 0.998778V as dBm:

$$\text{dBm} = 10 \log \frac{(0.998778\text{V})^2 / 50\Omega}{1\text{mW}} = 13.00032\text{dBm}$$

and expressing 0.998852V as dBm:

$$\text{dBm} = 10 \log \frac{(0.998852\text{V})^2 / 50\Omega}{1\text{mW}} = 13.00032\text{dBm}$$

Thus, the actual reading range is 13dBm ± 0.00032dBm.

dBm and dB for other voltage inputs can be calculated in exactly the same manner using pertinent specifcations, ranges, and reference impedances.

Calculating dB characteristics accuracy

The relationship between voltage and dB is as follows:

$$dB = 20 \log \frac{V_{IN}}{V_{REF}}$$

As an example of how to calculate the actual readings limits for dB, with a user-defined V_{REF} of 10V, you must calculate the voltage accuracy and apply it to above equation.

To calculate a -60dB measurement, assume 10mVRMS for a V_{REF} of 10V. Using the 100mV range, one-year, 10Hz - 20kHz frequency band, and SLOW rate, the voltage limits are as follows:

Accuracy = ±[(0.06% of reading) + (0.03% of range)]
±[(0.006 × 10mV) + (0.0003 × 100mV)]
±[6µV + 30µV]
±36µV

Thus, the actual reading accuracy is 10mV ± 36µV or 10.036mV to 9.964mV. Applying the voltage reading accuracy into the dB equation yields:

$$dBm = 20 \log \frac{10.036mV}{10V} = -59.96879dB$$

$$dBm = 20 \log \frac{9.964mV}{10V} = -60.03133dB$$

Thus, the actual reading accuracy is -60dB + 0.031213dB to -60dB - 0.031326dB.

dBm and dB for other voltage inputs can be calculated in exactly the same manner using pertinent specifications, ranges, and other reference voltages.

Additional derating factors

In some cases, additional derating factors must be applied to calculate certain accuracy values. For example, an additional derating factor must be added for DC voltages over 500V. Before calculating accuracy, study the associated specification notes carefully to see if any derating factors apply.

Optimizing measurement accuracy

The configurations listed below assume that the multimeter has had factory setups restored.

DC voltage, DC current, and resistance:

- Select 6½ digits, 10 PLC, filter ON (up to 100 readings), fixed range.
- Use REL on DC voltage and 2-wire resistance measurements.
- Use 4-wire resistance measurements for best accuracy.

AC voltage and AC current:

- Select 6½ digits, 10 PLC, filter ON (up to 100 readings), fixed range.

Temperature:

- Select 6½ digits, 10 PLC, filter ON (up to 100 readings).

Optimizing measurement speed

The configurations listed below assume that the multimeter has had factory setups restored.

DC voltage, DC current, and resistance:

Select 3½ digits, 0.01 PLC, filter OFF, fixed range.

AC voltage and AC current:

Select 3½ digits, 0.01 PLC, filter OFF, fixed range.

Temperature:

- Select 3½ digits, 0.01 PLC, filter OFF.

For all functions, turn off the display and autozero and set the trigger delay to zero. Use the :SAMPle:COUNt and READ? bus commands.

B
Status and Error Messages

Table B-1
Status and error messages

Number	Description	Event
-440	Query unterminated after indefinite response	EE
-430	Query deadlocked	EE
-420	Query unterminated	EE
-410	Query interrupted	EE
-363	Input buffer overrun	SYS
-350	Queue overflow	SYS
-330	Self-test failed	EE
-314	Save/recall memory lost	EE
-315	Configuration memory lost	EE
-285	Program syntax error	EE
-284	Program currently running	EE
-282	Illegal program name	EE
-281	Cannot create program	EE
-260	Expression error	EE
-241	Hardware missing	EE
-230	Data corrupt or stale	EE
-225	Out of memory	EE
-224	Illegal parameter value	EE
-223	Too much data	EE
-222	Parameter data out of range	EE
-221	Settings conflict	EE
-220	Parameter error	EE
-215	Arm deadlock	EE
-214	Trigger deadlock	EE
-213	Init ignored	EE
-212	Arm ignored	EE
-211	Trigger ignored	EE
-210	Trigger error	EE
-202	Settings lost due to rtl	EE
-201	Invalid while in local	EE
-200	Execution error	EE
-178	Expression data not allowed	EE
-171	Invalid expression	EE
-170	Expression error	EE
-168	Block data not allowed	EE
-161	Invalid block data	EE
-160	Block data error	EE
-158	String data not allowed	EE
-154	String too long	EE
-151	Invalid string data	EE
-150	String data error	EE

Table B-1
Status and error messages

Number	Description	Event
-148	Character data not allowed	EE
-144	Character data too long	EE
-141	Invalid character data	EE
-140	Character data error	EE
-128	Numeric data not allowed	EE
-124	Too many digits	EE
-123	Exponent too large	EE
-121	Invalid character in number	EE
-120	Numeric data error	EE
-114	Header suffix out of range	EE
-113	Undefined header	EE
-112	Program mnemonic too long	EE
-111	Header separator error	EE
-110	Command header error	EE
-109	Missing parameter	EE
-108	Parameter not allowed	EE
-105	GET not allowed	EE
-104	Data type error	EE
-103	Invalid separator	EE
-102	Syntax error	EE
-101	Invalid character	EE
-100	Command error	EE
+000	No error	SE
+101	Operation complete	SE
+121	Device calibrating	SE
+122	Device settling	SE
+123	Device ranging	SE
+124	Device sweeping	SE
+125	Device measuring	SE
+126	Device calculating	SE
+161	Program running	SE
+171	Waiting in trigger layer	SE
+174	Re-entering the idle layer	SE
+301	Reading overflow	SE
+302	Low limit 1 event	SE
+303	High limit 1 event	SE
+304	Low limit 2 event	SE
+305	High limit 2 event	SE
+306	Reading available	SE
+307	Voltmeter complete	SE

Table B-1
Status and error messages

Number	Description	Event
+308	Buffer available	SE
+309	Buffer half full	SE
+310	Buffer full	SE
+311	Buffer overflow	SE
	Calibration messages:	
+400	10 vdc zero error	EE
+401	100 vdc zero error	EE
+402	10 vdc full scale error	EE
+403	-10 vdc full scale error	EE
+404	100 vdc full scale error	EE
+405	-100 vdc full scale error	EE
+406	1k 2-w zero error	EE
+407	10k 2-w zero error	EE
+408	100k 2-w zero error	EE
+409	10M 2-w zero error	EE
+410	10M 2-w full scale error	EE
+411	10M 2-w open error	EE
+412	1k 4-w zero error	EE
+413	10k 4-w zero error	EE
+414	100k 4-w zero error	EE
+415	10M 4-w sense lo zero error	EE
+416	1k 4-w full scale error	EE
+417	10k 4-w full scale error	EE
+418	100k 4-w full scale error	EE
+419	1M 4-w full scale error	EE
+420	10M 4-w full scale error	EE
+421	10m adc zero error	EE
+422	100m adc zero error	EE
+423	10m adc full scale error	EE
+424	100m adc full scale error	EE
+425	1 adc full scale error	EE
+438	Date of calibration not set	EE
+439	Next date of calibration not set	EE
+450	100m vac dac error	EE
+451	1 vac dac error	EE
+452	10 vac dac error	EE
+453	100 vac dac error	EE
+454	100m vac zero error	EE
+455	100m vac full scale error	EE
+456	1 vac zero error	EE
+457	1 vac full scale error	EE
+458	1 vac noise error	EE

Table B-1
Status and error messages

Number	Description	Event
+459	10 vac zero error	EE
+460	10 vac full scale error	EE
+461	10 vac noise error	EE
+462	100 vac zero error	EE
+463	100 vac full scale error	EE
+464	750 vac zero error	EE
+465	750 vac full scale error	EE
+466	750 vac noise error	EE
+467	Post filter offset error	EE
+468	1 aac zero error	EE
+469	1 aac full scale error	EE
+470	3 aac zero error	EE
+471	3 aac full scale error	EE
+472	Input time constant error	EE
+473	Frequency gain error	EE
+500	Calibration data invalid	EE
+510	Reading buffer data lost	EE
+511	GPIB address lost	EE
+512	Power-on state lost	EE
+513	AC calibration data lost	EE
+514	DC calibration data lost	EE
+515	Calibration dates lost	EE
+522	GPIB communication language lost	EE
+610	Questionable Calibration	SE
+611	Questionable Temperature	SE
+800	RS-232 Framing Error detected	EE
+802	RS-232 Overrun detected	EE
+803	RS-232 Break detected	EE
+805	Invalid system communication	EE
+806	RS-232 Settings Lost	EE
+807	RS-232 OFLO: Characters Lost	EE
+808	ASCII only with RS-232	EE
+900	Internal System Error	EE
	DDC Status Model:	
+950	DDC Trigger Overrun Error	EE
+951	DDC Interval Overrun Error	EE
+952	DDC Big String Error	EE
+953	DDC Uncalibrated Error	EE
+954	DDC No Scanner Error	EE
+955	DDC Maximum Channel is 4	EE

Table B-1
Status and error messages

Number	Description	Event
+956	DDC Maximum Channel is 8	EE
+957	DDC Calibration Locked	EE
+958	DDC Conflict Error	EE
+959	DDC No Remote Error	EE
+960	DDC Mode IDDC Error	EE
+961	DDC Mode IDDCO Error	EE
	Keithley 199 Serial Poll Byte Events:	
+962	DDC Ready	SE
+963	DDC Reading Done	SE
+964	DDC Buffer Half Full	SE
+965	DDC Buffer Full	SE
+966	DDC Reading overflow	SE
	Fluke 8842 serial poll byte events:	
+970	Fluke Error	SE
+971	Data Available	SE
+972	Overrange	SE

EE = error event
SE - status event
SYS = system error event

NOTE: *SCPI-confirmed messages are described in Volume 2: Command Reference of the Standard Commands for Programmable Instruments. Refer to the :SYSTem:ERRor? command.*

C
Example Programs

Program examples

All examples presume QuickBASIC version 4.5 or higher and a CEC IEEE-488 interface card with CEC driver version 2.11 or higher, with the Model 2000 at address 16 on the IEEE-488 bus.

Changing function and range

The Model 2000 has independent controls for each of its measurement functions. This means, for example, that autorange can be turned on for DC voltage while leaving it off for AC voltage.

Another difference is in the parameter to the range command. In other instruments, a single number was used to denote each range. The parameter of the SCPI `RANGe` command is given as "the maximum value to measure." The instrument interprets this parameter and goes to the appropriate range. When you query the range with `RANGe?` the instrument sends back the full-scale value of its present range.

The following example program illustrates changing function and range. It sets the range for several functions, then takes readings on each of those functions.

Note that the Model 2000 rounds the range parameter to an integer before choosing the appropriate range. Sending `VOLTage:DC:RANGe 20.45` will set the Model 2000 to the 100V range.

```
'Example program to demonstrate changing function and range,
'taking readings on various functions
'For QuickBASIC 4.5 and CEC PC488 interface card

'Edit the following line to where the QuickBASIC
'libraries are on your computer
'$INCLUDE: 'c:\qb45\ieeeqb.bi'

'Initialize the CEC interface as address 21
CALL initialize(21, 0)

'Reset the SENSe1 subsystem settings, along with the trigger
'model, each READ? will cause one trigger
CALL SEND(16, "*rst", status%)

'Set range for each function to measure
CALL SEND(16, "volt:dc:rang .1", status%)
CALL SEND(16, "volt:ac:rang 20", status%)
CALL SEND(16, "res:rang 80", status%)

'Switch to DC volts and take reading
CALL SEND(16, "func 'volt:dc';:read?", status%)
reading$ = SPACE$(80)
CALL ENTER(reading$, length%, 16, status%)
PRINT reading$

'Switch to AC volts and take reading
CALL SEND(16, "func 'volt:ac';:read?", status%)
reading$ = SPACE$(80)
CALL ENTER(reading$, length%, 16, status%)
PRINT reading$

'Switch to 2-wire ohms and take reading
CALL SEND(16, "func 'res';:read?", status%)
reading$ = SPACE$(80)
CALL ENTER(reading$, length%, 16, status%)
PRINT reading$
```

One-shot triggering

Other DMMs generally have two types of triggering: one-shot and continuous. In one-shot, each activation of the selected trigger source causes one reading. In continuous, the DMM is idle until the trigger source is activated, at which time it begins taking readings at a specified rate. Typical trigger sources are:

- IEEE-488 talk
- IEEE-488 Group Execute Trigger (GET)
- “X” command
- External trigger (rear panel BNC)

Arming the instrument to respond to triggers is implicit in the non-SCPI DMMs. Simply sending a command to a non-SCPI DMM to change any of the trigger controls causes the instrument to arm itself for triggers.

The SCPI trigger model implemented in the Model 2000 gives you:

- Explicit control over the trigger source (the `TRIGger` subsystem).
- A way for completely disabling triggers.

Changing any of the settings in the `TRIGger` subsystem does not automatically arm the Model 2000 for triggers.

The following program sets up the Model 2000 to take one reading each time it receives an external trigger pulse.

```
'Example program to demonstrate one-shot external triggering
'For QuickBASIC 4.5 and CEC PC488 interface card

'Edit the following line to where the QuickBASIC
'libraries are on your computer
'$INCLUDE: 'c:\qb45\ieeeqb.bi'

'Initialize the CEC interface as address 21
CALL initialize(21, 0)

'Reset controls and put trigger model in IDLE state
CALL SEND(16, "*rst", status%)

CALL SEND(16, "trig:sour ext;coun inf", status%)

'start everything
CALL SEND(16, "init", status%)
```

After the Model 2000 receives the `INITiate` command, it stops at the control source in the trigger model, waiting for a trigger pulse. Each time a pulse arrives at the Trigger Link connector, the Model 2000 takes one reading. Because `TRIGger:COUNt` has been set to `INFinity`, the instrument never enters the idle state. You can send the `ABORt` command to put the instrument in the idle state, disabling triggers until another `INITiate` command is sent.

Generating SRQ on buffer full

When your program must wait until the Model 2000 has completed an operation, it is more efficient to program the 2000 to assert the IEEE-488 SRQ line when it is finished, rather than repeatedly serial polling the instrument. An IEEE-488 controller will typically address the instrument to talk, then unaddress it, each time it performs a serial poll. Repeated polling of the Model 2000 will generally reduce its overall reading throughput. Therefore, use the `srq%()` function call.

The Model 2000 provides a status bit for nearly every operation it performs. It can be programmed to assert the IEEE-488 SRQ line whenever a status bit becomes true or false. The IEEE-488 controller (your computer) can examine the state of the the SRQ line without performing a serial poll, thereby detecting when the 2000 has completed its task without interrupting it in the process.

The following example program segment sets up the Model 2000 to assert SRQ when the reading buffer has completely filled, then arms the reading buffer, initiates readings, and waits for the Model 2000 to indicate that the buffer is full.

This is not a complete program. Not shown are the commands to configure the trigger model and the reading buffer (see the next example). The example shown here can be modified for any event in the Model 2000 status reporting system.

```
'Reset STATus subsystem (not affected by *RST)
CALL SEND(16, "stat:pres;*cls", status%)

CALL SEND(16, "stat:meas:enab 512", status%)'enable BFL
CALL SEND(16, "*sre 1"' status%)'enable MSB
CALL SEND(16, "trac:feed:cont next", status%)

' Start everything
CALL SEND(16, "init", status%)

WaitSRQ:
IF (NOT(srq%)) THEN GOTO WaitSRQ
CALL SPOLL(16, poll%, status%)
IF (poll% AND 64)=0 THEN GOTO WaitSRQ
```

Notice that after the program has detected an asserted SRQ line, it serial polls the Model 2000 to determine if it is the device requesting service. This is necessary for two reasons:

- Serial polling the Model 2000 causes it to quit asserting the SRQ line.
- In test systems that have more than one IEEE-488 instrument programmed to assert SRQ, your program must determine which instrument is actually requesting service.

Once an event register has caused a service request, it cannot cause another service request until you clear it by reading it (in this case using `STATus:MEASurement[:EVENt]?`) or by sending the `*CLS` command.

Storing readings in buffer

The reading buffer in the Model 2000 is flexible and capable. It has three controls, which are found in the `TRACe` susbsystem. There are commands to control:

- The size of the buffer (in readings).
  `TRACe:POINts <NRf>`
- Where the data is coming from (before or after the CALCulate1 math post-processing).

`TRACe:FEED SENSe1`	store unprocessed readings
`TRACe:FEED CALCualte1`	store math processed readings

- Select buffer control mode.

`TRACe:FEED:CONTrol NEVer`	immediately stop storing readings
`TRACe:FEED:CONTrol NEXT`	start now, stop when buffer is full

The following example program sets up the Model 2000 to take 20 readings as fast as it can into the buffer, then reads the data back after the buffer has filled.

```
'Example program to demonstrate the reading buffer
'For QuickBASIC 4.5 and CEC PC488 interface card

'Edit the following line to where the QuickBASIC
'libraries are on your computer
'$INCLUDE: 'c:\qb45\ieeeqb.bi'

'Initialize the CEC interface as address 21
CALL initialize(21, 0)

'Reset controls and put trigger model in IDLE state
CALL SEND(16, "*rst", status%)

'Reset STATus subsystem (not affected by *RST)
CALL SEND(16, "stat:pres;*cls", status%)
CALL SEND(16, "stat:meas:enab 512", status%)'enable BFL
CALL SEND(16, "*sre 1", status%)'enable MSB
CALL SEND(16, "trig:coun 20", status%)

'TRACe subsystem is not affected by *RST
CALL SEND(16, "trac:poin 20", status%)
CALL SEND(16, "trac:feed sens1;feed:cont next", status%)

'Start everything
CALL SEND(16, "init", status%)

'Initialize reading$ while the 2000 is busy taking readings
reading$ = SPACE$(4000)

WaitSRQ:
IF (NOT(srq%)) THEN GOTO WaitSRQ
CALL SPOLL(16, poll%, status%)
IF (poll% AND 64)=0 THEN GOTO WaitSRQ

CALL SEND(16, "stat:meas?", status%)
CALL ENTER(S$, length%, 16, status%)

CALL SEND(16, "form:elem read,unit" status%)
CALL SEND(16, "trac:data?", status%)
CALL ENTER(reading$, length%, 16, status%)
PRINT reading$
```

NOTE *To repeat buffer storage, send the following command and then repeat the steps following the* ‘`Start everything` *comment in the above example.*

```
CALL SEND(16, "feed:cont next", status%)
```

Taking readings with the scanner card

The Model 2000-SCAN is an optional 10-channel scanner card for the Model 2000 Multimeter. Only one channel can be closed at a time. If you close a channel while another is already closed, the first one opens with break-before-make operation.

You can use the scanner card two ways. One is to issue a command to close a particular channel before sending other commands to take readings. The other way is to program the scan list, and let the meter take care of closing a channel before taking a reading.

The following example program measures DC volts on channel 1, AC volts on channel 2, and 2-wire resistance on channel 3, using the `ROUTe:CLOSe` command.

```
'Example program to demonstrate taking readings on different
'scanner channels
'For QuickBASIC 4.5 and CEC PC488 interface card

'Edit the following line to where the QuickBASIC
'libraries are on your computer
'$INCLUDE: 'c:\qb45\ieeeqb.bi'

'Initialize the CEC interface as address 21
CALL initialize(21, 0)

'Reset controls in INIT, ARM;LAY1, ARM:LAY2, and TRIG subsystems
'and put trigger model in IDLE state, set function to DCV
CALL SEND(16, "*rst", status%)

'Close channel 1, take DC voltage reading
CALL SEND(16, "rout:clos (@1);:read?", status%)
reading$ = SPACE$(80)
CALL ENTER(reading$, length%, 16, status%)
PRINT reading$

'Close channel 2, take AC voltage reading
CALL SEND(16, "func 'volts:ac'", status%)
CALL SEND(16, "rout:clos (@2);:read?", status%)
reading$ = SPACE$(80)
CALL ENTER(reading$, length%, 16, status%)
PRINT reading$

'Close channel 3, take ohms reading
CALL SEND(16, "func 'res'", status%)
CALL SEND(16, "rout:clos (@3);:read?", status%)
reading$ = SPACE$(80)
CALL ENTER(reading$, length%, 16, status%)
PRINT reading$
```

The following example program sets up the Model 2000 using a scan list to measure DC voltage on channels 1, 2 and 3. The meter takes ten sets of readings, with each set spaced 15 seconds apart, and each of the three readings in each group taken as fast as possible. The Model 2000 stores the readings in the buffer, and asserts SRQ when the buffer is full. The program waits for the SRQ, then reads the readings from the buffer.

```
'Example program to demonstrate using the scan list
'For QuickBASIC 4.5 and CEC PC488 interface card

'Edit the following line to where the QuickBASIC
'libraries are on your computer
'$INCLUDE: 'c:\qb45\ieeeqb.bi'

'Initialize the CEC interface as address 21
CALL initialize(21, 0)

'Reset controls and put trigger model in IDLE state, set function to DCV
CALL SEND(16, "*rst", status%)

'Reset STATus subsystem (not affected by *RST)
CALL SEND(16, "stat:pres;*cls", status%)

CALL SEND(16, "stat:meas:enab 512", status%)'enable BFL
CALL SEND(16, "*sre 1", status%)'enable MSB
```

```
'*RST sets TRIG:SOUR to IMM
CALL SEND(16, "samp:coun 3", status%)
CALL SEND(16, "trig:sour tim;tim 15", status%)
CALL SEND(16, "trig:coun 10", status%)

'TRACe subsystem is not affected by *RST
CALL SEND(16, "trac:poin 30", status%)
CALL SEND(16, "trac:feed sens1;feed:cont next", status%)
' now the buffer is armed

CALL SEND(16, "rout:scan (@1:3)", status%)
CALL SEND(16, "rout:scan:lsel int", status%)

'Start everything
CALL SEND(16, "init", status%)

'Initialize reading$ while the 2000 is busy taking readings
reading$ = SPACE$(2500)

WaitSRQ:
IF (NOT(srq%)) THEN GOTO WaitSRQ
CALL SPOLL(16, poll%, status%)
IF (poll% AND 64)=0 THEN GOTO WaitSRQ

CALL SEND(16, "stat:meas", status%)
CALL ENTER(S$, length%, 16, status%)

CALL SEND(16, "form:elem read,unit" status%)
CALL SEND(16, "trac:data?", status%)
CALL ENTER(reading$, length%, 16, status%)
PRINT reading$
```

NOTE *To repeat buffer storage, send the following command and then repeat the steps following the* `'Start everything` *comment in the above example.*

```
CALL SEND(16, "feed:cont next", status%)
```

Taking readings using the :READ? command

This programming example demonstrates a simple method to take and display (on the computer CRT) a specified number of readings. The number of readings are specified by the :SAMPle:COUNt command. When :READ? is asserted, the specified number of readings are taken. After all the readings are taken, they are sent to the computer. Note that these readings are also stored in the buffer.

The following program takes 10 readings on the DCV function and displays then on the computer CRT.

```
' For QuickBASIC 4.5 and CEC PC488 interface card
' edit the following line to where the QuickBASIC libraries are
' on your computer
' $INCLUDE: 'c:\qb45\ieeeqb.bi

' Initialize the CEC interface as address 21
CALL initialize(21, 0)

' Reset controls, clear buffer and place 2000 in idle
CALL SEND(16, "*rst", status%)
CALL SEND(16, "trac:cle", status%)

CALL SEND(16, "sample:coun 10", status%)
CALL SEND(16, "form:elem read,unit", status%)
CALL SEND(16, "read?", status%)
reading$ = SPACE$ (300)
CALL ENTER(reading$, length%, 16, status%)
PRINT reading$
```

Controlling the Model 2000 via the RS-232 COM2 port

This example program illustrates the use of the Keithley Model 2000 DMM interfaced to the RS-232 COM2 port. The Model 2000 is setup to take 100 readings at the fastest possible rate (2000 per second). The readings are taken, sent across the serial port, and displayed on the screen.

```
' Example program controlling the Model 2000 via the RS-232 COM2 port
' For QuickBASIC 4.5 and CEC PC488 interface card
RD$=SPACE$(1500)                ' Set string space
CLS                             ' CLear screen
PRINT "Set COM2 baud rate to 9600"
PRINT "Set no flow control, and CR as Terminator"

' Configure serial port parameters
ComOpen$="COM2:9600,8,1,ASC,CD0,CS0,DS0,LF,OP0,RS,TB8192,RB8192"
OPEN ComOpen$ FOR RANDOM AS #1

' Model 2000 setup commands
' Note Serial communications only operate with SCPI mode....
PRINT #1, "*RST"                ' Clear registers
```

```
PRINT #1, "*CLS"                                  ' Clear Model 2000
PRINT #1, ":INIT:CONT OFF;:ABORT"                 ' Init off
PRINT #1, ":SENS:FUNC 'VOLT:DC'"                  ' DCV
PRINT #1, ":SYST:AZER:STAT OFF"                   ' Auto zero off
PRINT #1, ":SENS:VOLT:DC:AVER:STAT OFF"           ' Filter off
PRINT #1, ":SENS:VOLT:DC:NPLC 0.01"               ' NPLC = 0.01
PRINT #1, ":SENS:VOLT:DC:RANG 10"                 ' 10V range
PRINT #1, ":SENS:VOLT:DC:DIG 4"                   ' 4 digit
PRINT #1, ":FORM:ELEM READ"                       ' Reading only
PRINT #1, ":TRIG:COUN 1"                          ' Trig count 1
PRINT #1, ":SAMP:COUN 100"                        ' Sample count 100
PRINT #1, ":TRIG:DEL 0"                           ' No trigger delay
PRINT #1, ":TRIG:SOUR IMM"                        ' Immediate trigger
PRINT #1, ":DISP:ENAB OFF"                        ' No display
SLEEP 1                                           ' Wait one second
PRINT #1, ":READ?"                                ' Read query
LINE INPUT #1, RD$                                ' Get data
PRINT RD$                                         ' Display data
PRINT #1, ":DISP:ENAB ON"                         ' Turn on display

' Clean up and quit.
finish:
CLOSE #1                                          ' Close file
CLEAR                                             ' Interface clear
END
```

D
Models 196/199 and 8840A/8842A Commands

The Model 2000 can be configured to accept device-dependent commands of the Keithley Models 196/199. The commands to control the Model 2000 with the 196/199 language are provided in Table D-1.

Since the architecture of the Model 2000 differs from that of the 196/199, some commands are different or cannot be used. Commands such as function (offset-compensated ohms, AC current dB), range, analog and digital filter, rate, calibration, factory defaults, and self-test do not map one-for-one. Also note that the Model 2000 does not have the speed characteristics of the Models 196/199. Other commands of the Model 2000 have been added to the 196/199 command set, such as frequency, temperature, and scanning. Refer to the appropriate manual for further details.

CAUTION ***The 196/199 language is intended to be used only over the IEEE-488 bus. Using front panel controls in conjunction with this language may cause erratic operation. In this case, results cannot be guaranteed.***

Table D-1
Models 196/199 device-dependent command summary

Mode	Command	Description						
Execute	X	Execute other device-dependent commands.						
Function	F0	DC volts						
	F1	AC volts						
	F2	2-wire ohms						
	F3	DC current						
	F4	AC current						
	F5	ACV dB						
	F6	Not valid						
	F7	Frequency						
	F8	Temperature						
	F9	4-wire ohms						
Range		DCV	ACV	DCA	ACA	Ohms*	ACV dB	Freq
	R0	Auto	Auto	Auto	Auto	Auto	Auto	—
	R1	1V	1V	100mA	1A	1kΩ	1V	.1V
	R2	10V	10V	3A	3A	10kΩ	10V	1V
	R3	100V	100V	3A	3A	100kΩ	100V	10V
	R4	1000V	750V	3A	3A	1MΩ	750V	100V
	R5	1000V	750V	3A	3A	10MΩ	750V	750V
	R6	1000V	750V	3A	3A	100MΩ	750V	—
	R7	1000V	750V	3A	3A	100MΩ	750V	—
		*2-wire and 4-wire ohms						
Zero (Rel)	Z0	Zero disabled						
	Z1	Zero enabled						
	Z2	Zero enabled using a zero value (V)						
Filter	P0	Filter disabled						
	P1	Moving filter (count = 10)						
	P2	Repeat filter (count = 10)						

Table D-1 (cont.)
Models 196/199 device-dependent command summary

Mode	Command	Description
Rate	S0	0.1 PLC integration
	S1	Line cycle integration (16.67msec, 60Hz; 20msec, 50Hz)
	S2	10 PLC (166.67msec integration, 60Hz; 200msec integration, 50Hz)
Trigger mode	T0	Continuous on Talk
	T1	One-shot on Talk
	T2	Continuous on GET
	T3	One-shot on GET
	T4	Continuous on X
	T5	One-shot on X
	T6	Continuous on External Trigger
	T7	One-shot on External Trigger
Reading mode	B0	Readings from A/D converter
	B1	Individual readings from data store
	B2	All readings from data store (buffer dump)
Data store size	I0	Disable data store
	In	Data store of n (n=1 to 500), fill and stop
Interval	Q0	Default interval, 175msec (SELECT OFF)
	Qn	n=interval in milliseconds (15msec to 999999msec)
Value	V±nn.nnnn or V±n.nnnnnnE+n	Zero value, simulated reference junction temperature
Default conditions	L0	Restore factory default conditions and save (L1)
	L1	Save present machine states as default conditions
Data format	G0	Reading with prefix.
	G1	Reading without prefix.
	G2	Reading and buffer location with prefix.
	G3	Reading and buffer location without prefix.
	G4	Reading and channel with prefix.
	G5	Reading and channel without prefix.
	G6	Reading, buffer location, and channel with prefix.
	G7	Reading, buffer location, and channel without prefix.
SRQ	M0	Disable
	M1	Reading overflow
	M2	Data store full
	M4	Data store half full
	M8	Reading done
	M16	Ready
	M32	Error
EOI and bus hold-off	K0	Enable EOI and bus hold-off on X
	K1	Disable EOI, enable bus hold-off on X
	K2	Enable EOI, disable bus hold-off on X
	K3	Disable both EOI and bus hold-off on X

Table D-1 (cont.)
Models 196/199 device-dependent command summary

Mode	Command	Description
Terminator	Y0	CR LF
	Y1	LF CR
	Y2	CR
	Y3	LF
Status	U0	Send machine status word (199 format only)
	U1	Send error conditions (only supports no scanner, IDDC, IDDCO)
	U2	Send Translator word list (since Translator is not supported, replies with one space character)
	U3	Send buffer size
	U4	Send current value of “V” (199 format, equivalent to U7 for 196)
	U5	Send input switch status (front /rear) (199 format, equivalent to U8 for 196)
	U6	Send simulated temperature (set by H0)
Multiplex	A0	Auto/Cal multiplex disabled
	A1	Auto/Cal multiplex enabled
Delay	Wn	n=delay period in milliseconds, (0msec to 999999msec)
Display	Da	Display up to 12-character message (a=character)
	D	Cancel display mode
Scanning	N0	Open all - stop scanning or stepping if applicable
	N1	Close channel 1
	N2	Close channel 2
	N3	Close channel 3
	N4	Close channel 4
	N5	Close channel 5
	N6	Close channel 6
	N7	Close channel 7
	N8	Close channel 8
	N9	Close channel 9
	N10	Close channel 10
	N11	Step mode, max channel is 2
	N12	Step mode, max channel is 3
	N13	Step mode, max channel is 4
	N14	Step mode, max channel is 5
	N15	Step mode, max channel is 6
	N16	Step mode, max channel is 7
	N17	Step mode, max channel is 8
	N18	Step mode, max channel is 9
	N19	Step mode, max channel is 10
	N20	Open all - stop scanning or stepping if applicable

Table D-1 (cont.)
Models 196/199 device-dependent command summary

Mode	Command	Description
Scanning (cont.)	N21	Scan mode, max channel is 2
	N22	Scan mode, max channel is 3
	N23	Scan mode, max channel is 4
	N24	Scan mode, max channel is 5
	N25	Scan mode, max channel is 6
	N26	Scan mode, max channel is 7
	N27	Scan mode, max channel is 8
	N28	Scan mode, max channel is 9
	N29	Scan mode, max channel is 10
Thermocouple	J0	Type J thermocouple
	J1	Type K thermocouple
	J2	Type T thermocouple
	O0	Simulated reference junction (for temperature function)
	O1	Real reference junction (for temperature function)
	H0	Set simulated reference junction temperature using “V” command; 0 to 50 (°C).

The Model 2000 can be configured to accept device-dependent commands of the Fluke Models 8840A/8842A. The commands to control the Model 2000 with the 8840A/8842A language are provided in Table D-2.

Since the architecture of the Model 2000 differs from that of the 8840A/8842A, some commands are different or cannot be used. Commands such as range, calibration, factory defaults, and self-test do not map one-for-one. Also note that the Model 2000 does not have the speed characteristics of the Models 8840A/8842A. Other commands of the Model 2000 have been added to the 8840A/8842A command set, such as frequency, temperature, and scanner channels. Refer to the appropriate manual for further details.

CAUTION ***The 8840A/8842A language is intended to be used only over the IEEE-488 bus. Using front panel controls in conjunction with this language may cause erratic operation. In this case, results cannot be guaranteed.***

Table D-2
Models 8840A/8842A device-dependent command summary

Mode	Command	Description					
Function	F1	VDC (default)					
	F2	VAC					
	F3	2-wire kΩ					
	F4	4-wire kΩ					
	F5	mA DC					
	F6	mA AC					
	F7	Freq					
	F8	Temp					
Range		VDC	VAC	kΩ*	mA DC	mA AC	Freq
	R0	Auto on	Auto on	Auto on	Auto on	Auto on	—
	R1	1V	1V	1kΩ	10mA	3A	1V
	R2	10V	10V	10kΩ	10mA	3A	10V
	R3	100V	100V	100kΩ	100mA	3A	100V
	R4	1000V	750V	1MΩ	1A	1A	750V
	R5	1000V	750V	10MΩ	3A	3A	750V
	R6	1000V	750V	100MΩ	3A	3A	750V
	R7	Auto off	Auto off	Auto off	Auto off	Auto off	—
	R8	100mV	750V	100Ω	3A	3A	750V
		*2-wire and 4-wire ohms					
Reading rate	S0	slow, 10 PLC					
	S1	Medium, 1 PLC, 6½-digit resolution (default)					
	S2	Fast, 0.1 PLC, 5½-digit resolution					

Table D-2 (cont.)
Models 8840A/8842A device-dependent command summary

Mode	Command	Description
Trigger mode		Trigger mode / Rear panel trigger / Auto delay
	T0 (default)	Internal / Disabled / —
	T1	External / Enabled / On
	T2	External / Disabled / On
	T3	External / Enabled / Off
	T4	External / Disabled / Off
		Note: Delay is enabled by entering EXT TRIG mode while in local.
Offset (Rel)	B0	Offset off (default)
	B1	Offset on
Display	D0	Normal display (default)
	D1	Blank display
Suffix	Y0	Disable output suffix (default)
	Y1	Enable output suffix
Terminator	W0	Enable CR LF EOI (default)
	W1	Enable CR LF only
	W2	Enable CR EOI only
	W3	Enable CR only
	W4	Enable LF EOI only
	W5	Enable LF only
	W6	Enable EOI only
	W7	Disable all output terminators
Clear	*	Device clear (resets 8842A to default conditions)
	X0	Clear error register
Single-trigger	?	Trigger measurement
GET	G0	Get instrument configuration (function, range, speed, trigger)
	G1	Get SRQ mask
	G2	Get calibration input prompt (generates error message 51)
	G3	Get user-defined message (replies with 16 space characters)
	G4	Get calibration status (replies with “1000”)
	G5	Get IAB status (input F/R, autorange on/off, offset on/off)
	G6	Get YW status (suffix enabled/disabled, terminator selection)
	G7	Get error status
	G8	Get instrument ID (replies with “FLUKE,8842A,0,EMUL”)

Table D-2 (cont.)
Models 8840A/8842A device-dependent command summary

Mode	Command	Description
GET (cont.)	G9	Get status of JKM commands (temp. units; TC type and junction) String = 1jkm
	G10	Get closed channel number String = 10nn Where: nn = 00 (all open) 01 through 10 (closed channel)
	G11	Get simulated reference junction temperature String = xx.xxx (in °C) Note: G2 valid only in calibration mode.
PUT	P0	Put instrument configuration (function, range, speed, trigger)
	P1	Put SRQ mask
	P4	Set simulated junction temperature; 0 to 50 (°C) Default temperature = 23°C
PUT format	N <value> P0 N <value> P1 N <value> P4	
Thermocouple type	K0	Type J thermocouple (default)
	K1	Type K thermocouple
	K2	Type T thermocouple
Temperature unit	J0	°C (default)
	J1	K
	J2	°F
Thermocouple reference junction	M0	Select simulated junction (default)
	M1	Select real junction (channel 1 for 2001-TCSCAN card)
Scanner channel	Ln	Control specified channel of internal scan card where: n = 0 (Open all channels) 1 through 10 (close specified channel) Note: For 4-wire ohms, only channels 1 through 5 are valid due to automatic channel pairing.
SRQ mask values	00	SRQ disabled (default)
	01	SRQ on overrange
	16	SRQ on data available
	32	SRQ on any error Note: Add SRQ mask values for combinations. Example: 33 for SRQ on overrange or any error.

E
IEEE-488 Bus Overview

Introduction

Basically, the IEEE-488 bus is simply a communication system between two or more electronic devices. A device can be either an instrument or a computer. When a computer is used on the bus, it serves to supervise the communication exchange between all the devices and is known as the controller. Supervision by the controller consists of determining which device will talk and which device will listen. As a talker, a device will output information and as a listener, a device will receive information. To simplify the task of keeping track of the devices, a unique address number is assigned to each one.

On the bus, only one device can talk at a time and is addressed to talk by the controller. The device that is talking is known as the active talker. The devices that need to listen to the talker are addressed to listen by the controller. Each listener is then referred to as an active listener. Devices that do not need to listen are instructed to unlisten. The reason for the unlisten instruction is to optimize the speed of bus information transfer since the task of listening takes up bus time.

Through the use of control lines, a handshake sequence takes place in the transfer process of information from a talker to a listener. This handshake sequence helps ensure the credibility of the information transfer. The basic handshake sequence between an active controller (talker) and a listener is as follows:

1. The listener indicates that it is ready to listen.
2. The talker places the byte of data on the bus and indicates that the data is available to the listener.
3. The listener, aware that the data is available, accepts the data and then indicates that the data has been accepted.
4. The talker, aware that the data has been accepted, stops sending data and indicates that data is not being sent.
5. The listener, aware that there is no data on the bus, indicates that it is ready for the next byte of data.

Bus description

The IEEE-488 bus, which is also frequently referred to a the GPIB (General Purpose Interface Bus), was designed as a parallel transfer medium to optimize data transfer without using an excessive number of bus lines. In keeping with this goal, the bus has only eight data lines that are used for both data and with most commands. Five bus management lines and three handshake lines round out the complement of bus signal lines

A typical set up for controlled operation is shown in Figure E-1. Generally, a system will contain one controller and a number of other instruments to which the commands are given. Device operation is categorized into three operators: controller, talker and listener. The controller does what its name implies; it controls the instruments on the bus. The talker sends data while a listener receives data. Depending on the type of instrument, any particular device can be a talker only, a listener only or both a talker and listener.

There are two categories of controllers: system controller, and basic controller. Both are able to control other instruments, but only the system controller has the absolute authority in the system. In a system with more than one controller, only one controller may be active at any given time. Certain protocol is used to pass control from one controller to another.

The IEEE-488 bus is limited to 15 devices, including the controller. Thus, any number of talkers and listeners up to that limit may be present on the bus at one time. Although several devices may be commanded to listen simultaneously, the bus can have only one active talker, or communications would be scrambled.

A device is placed in the talk or listen state by sending an appropriate talk or listen command. These talk and listen commands are derived from an instrument's primary address. The primary address may have any value between 0 and 31, and is generally set by rear panel DIP switches or programmed in from the front panel of the instrument. The actual listen address value sent out over the bus is obtained by ORing the primary address with $20. For example, if the primary address is $16, the actual listen address is $36 ($36 = $16 + $20). In a similar manner, the talk address is obtained by ORing the primary address with $40. With the present example, the talk address derived from a primary address of 16 decimal would be $56 ($56 = $16 + $40).

The IEEE-488 standards also include another addressing mode called secondary addressing. Secondary addresses lie in the range of $60-$7F. Note, however, that many devices, including the Model 2000, do not use secondary addressing.

Once a device is addressed to talk or listen, the appropriate bus transactions take place. For example: if the instrument is addressed to talk, it places its data string on the bus one byte at a time. The controller reads the information and the appropriate software can be used to direct the information to the desired location.

Figure E-1
IEEE-488 bus configuration

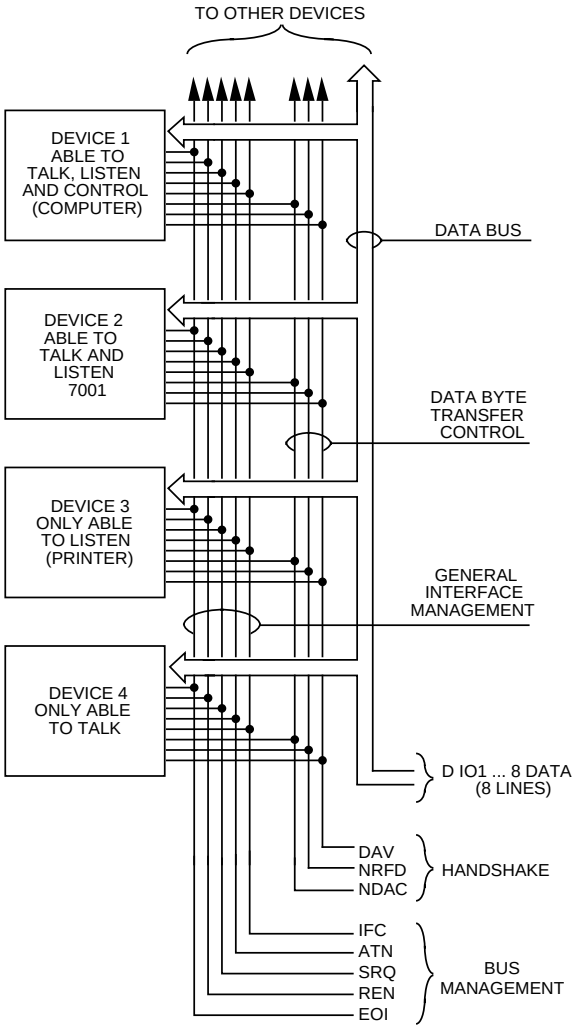

Bus lines

The signal lines on the IEEE-488 bus are grouped into three different categories: data lines, management lines and handshake lines. The data lines handle bus data and commands, while the management and handshake lines ensure that proper data transfer and operation takes place. Each bus line is active low, with approximately zero volts representing a logic 1 (true). The following paragraphs describe the operation of these lines.

Data lines

The IEEE-488 bus uses eight data lines that transfer data one byte at a time. DIO1 (Data Input/Output) through DIO8 (Data Input/Output) are the eight data lines used to transmit both data and multiline commands and are bidirectional. The data lines operate with low true logic.

Bus management lines

The five bus management lines help to ensure proper interface control and management. These lines are used to send the uniline commands.

ATN (Attention) — The ATN line is one of the more important management lines in that the state of this line determines how information on the data bus is to be interpreted.

IFC (Interface Clear) — As the name implies, the IFC line controls clearing of instruments from the bus.

REN (Remote Enable) —The REN line is used to place the instrument on the bus in the remote mode.

EOI (End or Identify) — The EOI is usually used to mark the end of a multi-byte data transfer sequence.

SRQ (Service Request) — This line is used by devices when they require service from the controller.

Handshake lines

The bus handshake lines operate in an interlocked sequence. This method ensures reliable data transmission regardless of the transfer rate. Generally, data transfer will occur at a rate determined by the slowest active device on the bus.

One of the three handshake lines is controlled by the source (the talker sending information), while the remaining two lines are controlled by accepting devices (the listener or listeners receiving the information). The three handshake lines are:

DAV (DATA VALID) — The source controls the state of the DAV line to indicate to any listening devices whether or not data bus information is valid.

NRFD (Not Ready For Data) — The acceptor controls the state of NRFD. It is used to signal to the transmitting device to hold off the byte transfer sequence until the accepting device is ready.

NDAC (Not Data Accepted) — NDAC is also controlled by the accepting device. The state of NDAC tells the source whether or not the device has accepted the data byte.

The complete handshake sequence for one data byte is shown in Figure E-2. Once data is placed on the data lines, the source checks to see that NRFD is high, indicating that all active devices are ready. At the same time, NDAC should be low from the previous byte transfer. If these conditions are not met, the source must wait until NDAC and NRFD have the correct status. If the source is a controller, NRFD and NDAC must be stable for at least 100nsec after ATN is set true. Because of the possibility of a bus hang up, many controllers have time-out routines that display messages in case the transfer sequence stops for any reason.

Once all NDAC and NRFD are properly set, the source sets DAV low, indicating to accepting devices that the byte on the data lines is now valid. NRFD will then go low, and NDAC will go high once all devices have accepted the data. Each device will release NDAC at its own rate, but NDAC will not be released to go high until all devices have accepted the data byte.

The sequence just described is used to transfer both data, talk and listen addresses, as well as multiline commands. The state of the ATN line determines whether the data bus contains data, addresses or commands as described in the following paragraph.

Figure E-2
IEEE-488 handshake sequence

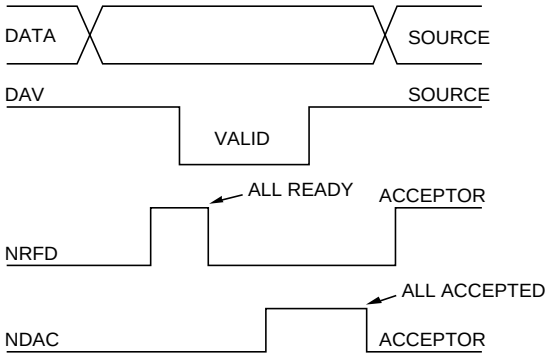

Bus commands

The instrument may be given a number of special bus commands through the IEEE-488 interface. This section briefly describes the purpose of the bus commands which are grouped into the following three categories.

1. Uniline Commands — Sent by setting the associated bus lines true. For example, to assert REN (Remote Enable), the REN line would be set low (true).
2. Multiline Commands — General bus commands which are sent over the data lines with the ATN line true (low).
3. Common Commands — Commands that are common to all devices on the bus; sent with ATN high (false).
4. SCPI Commands — Commands that are particular to each device on the bus; sent with ATN (false).

These bus commands and their general purpose are summarized in Table E-1.

Table E-1
IEEE-488 bus command summary

Command type	Command	State of ATN line	Comments
Uniline	REN (Remote Enable)	X	Set up devices for remote operation.
	EOI	X	Marks end of transmission.
	IFC (Interface Clear)	X	Clears interface.
	ATN (Attention)	Low	Defines data bus contents.
	SRQ	X	Controlled by external device.
Multiline Universal	LLO (Local Lockout)	Low	Locks our local operation.
	DCL (Device Clear)	Low	Returns device to default conditions.
	SPE (Serial Enable)	Low	Enables serial polling.
	SPD (Serial Poll Disable)	Low	Disables serial polling.
Addressed	SDC (Selective Device Clear)	Low	Returns unit to default conditions.
	GTL (Go To Local)	Low	Returns device to local.
Unaddressed	UNL (Unlisten)	Low	Removes all listeners from the bus.
	UNT (Untalk)	Low	Removes any talkers from the bus.
Common	—	High	Programs IEEE-488.2 compatible instruments for common operations.
SCPI	—	High	Programs SCPI compatible instruments for particular operations.

Uniline commands

ATN, IFC and REN are asserted only by the controller. SRQ is asserted by an external device. EOI may be asserted either by the controller or other devices depending on the direction of data transfer. The following is a description of each command. Each command is sent by setting the corresponding bus line true.

REN (Remote Enable) — REN is sent to set up instruments on the bus for remote operation. When REN is true, devices will be removed from the local mode. Depending on device con used to positively identify the last byte in a multi-byte transfer sequence, thus allowing data words of various lengths to be transmitted easily.

IFC (Interface Clear) — IFC is used to clear the interface and return all devices to the talker and listener idle states.

ATN (Attention) — The controller sends ATN while transmitting addresses or multiline commands.

SRQ (Service Request) — SRQ is asserted by a device when it requires service from a controller.

Universal multiline commands

Universal commands are those multiline commands that require no addressing. All devices equipped to implement such commands will do so simultaneously when the commands are transmitted. As with all multiline commands, these commands are transmitted with ATN true.

LLO (Local Lockout) — LLO is sent to the instrument to lock out the LOCAL key and thus all their front panel controls.

DCL (Device Clear) — DCL is used to return instruments to some default state. Usually, instruments return to their power-up conditions.

SPE (Serial Poll Enable) — SPE is the first step in the serial polling sequence which is used to determine which device has requested service.

SPD (Serial Poll Disable) — SPD is used by the controller to remove all devices on the bus from the serial poll mode and is generally the last command in the serial polling sequence.

Addressed multiline commands

Addressed commands are multiline commands that must be preceded by the device listen address before that instrument will respond to the command in question. Note that only the addressed device will respond to these commands. Both the commands and the address preceding it are sent with ATN true.

SDC (Selective Device Clear) — The SDC command performs essentially the same function as the DCL command except that only the addressed device responds. Generally, instruments return to their power-up default conditions when responding to the SDC command.

GTL (Go To Local) — The GTL command is used to remove instruments from the remote mode. With some instruments, GTL also unlocks front panel controls if they were previously locked out with the LLO command.

GET (Group Execute Trigger) — The GET command is used to trigger devices to perform a specific action that depends on device configuration (for example, take a reading). Although GET is an addressed command, many devices respond to GET without addressing.

Address commands

Addressed commands include two primary command groups and a secondary address group. ATN is true when these commands are asserted. The commands include:

LAG (Listen Address Group) — These listen commands are derived from an instrument's primary address and are used to address devices to listen. The actual command byte is obtained by ORing the primary address with $20.

TAG (Talk Address Group) — The talk commands are derived from the primary address by ORing the address with $40. Talk commands are used to address devices to talk.

SCG (Secondary Command Group) — Commands in this group provide additional addressing capabilities. Many devices (including the Model 2000) do not use these commands.

Unaddress commands

The two unaddress commands are used by the controller to remove any talkers or listeners from the bus. ATN is true when these commands are asserted.

UNL (Unlisten) — Listeners are placed in the listener idle state by the UNL command.

UNT (Untalk) — Any previously commanded talkers will be placed in the talker idle state by the UNT command.

Common commands

Common commands are commands that are common to all devices on the bus. These commands are designated and defined by the IEEE-488.2 standard.

Generally, these commands are sent as one or more ASCII characters that tell the device to perform a common operation, such as reset. The IEEE-488 bus treats these commands as data in that ATN is false when the commands are transmitted.

SCPI commands

SCPI commands are commands that are particular to each device on the bus. These commands are designated by the instrument manufacturer, and are based on the instrument model defined by the Standard Commands for Programmable Instruments (SCPI) Consortium's SCPI standard.

Generally, these commands are sent as one or more ASCII characters that tell the device to perform a particular operation, such as setting a range or closing a relay. The IEEE-488 bus treats these commands as data in that ATN is false when the commands are transmitted.

Command codes

Command codes for the various commands that use the data lines are summarized in Figure E-3. Hexadecimal and the decimal values for the various commands are listed in Table E-2.

Table E-2
Hexadecimal and decimal command codes

Command	Hex value	Decimal value
GTL	01	1
SDC	04	4
GET	08	8
LLO	11	17
DCL	14	20
SPE	18	24
SPD	19	25
LAG	20-3F	32-63
TAG	40-5F	64-95
SCG	60-7F	96-127
UNL	3F	63
UNT	5F	95

Figure E-3 *Command codes*

D_7 D_6 D_5 D_4						X 0 0 0	Command	X 0 0 1	Command	X 0 1 0	Primary Address	X 0 1 1	Primary Address	X 0 1 1	Primary Address	X 0 1 1	Primary Address	X 1 1 0		X 1 1 1	
Bits	**D_3 ↓**	**D_2 ↓**	**D_1 ↓**	**D_0 ↓**	**Column→ Row ↓**	**0 (A)**	**0 (B)**	**1 (A)**	**1 (B)**	**2 (A)**	**2 (B)**	**3 (A)**	**3(B)**	**4 (A)**	**4 (B)**	**5 (A)**	**5 (B)**	**6 (A)**	**6 (B)**	**7 (A)**	**7 (B)**
	0	0	0	0	0	NUL		DLE		SP	0	0	16	@	0	P	16			p	
	0	0	0	1	1	SOH	GTL	DC1	LLO	!	1	1	17	A	1	Q	17	a		q	
	0	0	1	0	2	STX		DC2		"	2	2	18	B	2	R	18	b		r	
	0	0	1	1	3	ETX		DC3		#	3	3	19	C	3	S	19	c		s	
	0	1	0	0	4	EOT	SDC	DC4	DCL	$	4	4	20	D	4	T	20	d		t	
	0	1	0	0	5	ENQ	PPC*	NAK	PPU*	%	5	5	21	E	5	U	21	e		u	
	0	1	1	0	6	ACK		SYN		&	6	6	22	F	6	V	22	f		v	
	0	1	1	1	7	BEL		ETB		'	7	7	23	G	7	W	23	g		w	
	1	0	0	0	8	BS	GET	CAN	SPE	(	8	8	24	H	8	X	24	h		x	
	1	0	0	1	9	HT	TCT*	EM	SPD	)	9	9	25	I	9	Y	25	i		y	
	1	0	1	0	10	LF		SUB		•	10	:	26	J	10	Z	26	j		z	
	1	0	1	1	11	VT		ESC		+	11	;	27	K	11	[	27	k		{	
	1	1	0	0	12	FF		FS		,	12	<	28	L	12	\	28	l		:	
	1	1	0	1	13	CR		GS		-	13	=	29	M	13	]	29	m		}	
	1	1	1	0	14	SO		RS		.	14	>	30	N	14	∩	30	n		≅	
	1	1	1	1	15	SI		US		/	15	?	UNL	O	15	—	UNT	o		DEL	

ADDRESSED COMMAND GROUP (ACG)

UNIVERSAL COMMAND GROUP (UCG)

LISTEN ADDRESS GROUP (LAG)

TALK ADDRESS GROUP (TAG)

PRIMARY COMMAND GROUP (PCG)

SECONDARY COMMAND GROUP (SDC)

*PPC (PARALLEL POLL CONFIGURE) PPU (PARALLEL POLL UNCONFIGURE), and TCT (TAKE CONTROL) not implemented by Model 2000.

Note: D_0 = DIO1 ... D_7 = DIO8; X = Don't Care.

Typical command sequences

For the various multiline commands, a specific bus sequence must take place to properly send the command. In particular, the correct listen address must be sent to the instrument before it will respond to addressed commands. Table E-3 lists a typical bus sequence for sending the addressed multiline commands. In this instance, the SDC command is being sent to the instrument. UNL is generally sent as part of the sequence to ensure that no other active listeners are present. Note that ATN is true for both the listen command and the SDC command byte itself.

Table E-3
Typical addressed command sequence

Step	Command	ATN state	Data bus		
			ASCII	Hex	Decimal
1	UNL	Set low	?	3F	63
2	LAG*	Stays low	0	30	48
3	SDC	Stays low	EOT	04	4
4		Returns high			

*Assumes primary address = 16.

Table E-4 gives a typical common command sequence. In this instance, ATN is true while the instrument is being addressed, but it is set high while sending the common command string.

Table E-4
Typical addressed command sequence

Step	Command	ATN state	Data bus		
			ASCII	Hex	Decimal
1	UNL	Set low	?	3F	63
2	LAG*	Stays low	0	30	48
3	Data	Set high	*	2A	42
4	Data	Stays high	R	52	82
5	Data	Stays high	S	53	83
6	Data	Stays high	T	54	84

*Assumes primary address = 16.

IEEE command groups

Command groups supported by the Model 2000 are listed in Table E-5. Common commands and SCPI commands are not included in this list.

Table E-5
IEEE command groups

HANDSHAKE COMMAND GROUP	
	NDAC = NOT DATA ACCEPTED
	NRFD = NOT READY FOR DATA
	DAV = DATA VALID
UNIVERSAL COMMAND GROUP	
	ATN = ATTENTION
	DCL = DEVICE CLEAR
	IFC = INTERFACE CLEAR
	REN = REMOTE ENABLE
	SPD = SERIAL POLL DISABLE
	SPE = SERIAL POLL ENABLE
ADDRESS COMMAND GROUP	
LISTEN	LAG = LISTEN ADDRESS GROUP
	MLA = MY LISTEN ADDRESS
	UNL = UNLISTEN
TALK	TAG = TALK ADDRESS GROUP
	MTA = MY TALK ADDRESS
	UNT = UNTALK
	OTA = OTHER TALK ADDRESS
ADDRESSED COMMAND GROUP	
	ACG = ADDRESSED COMMAND GROUP
	GTL = GO TO LOCAL
	SDC = SELECTIVE DEVICE CLEAR
STATUS COMMAND GROUP	
	RQS = REQUEST SERVICE
	SRQ = SERIAL POLL REQUEST
	STB = STATUS BYTE
	EOI = END

Interface function codes

The interface function codes, which are part of the IEEE-488 standards, define an instrument's ability to support various interface functions and should not be confused with programming commands found elsewhere in this manual. The interface function codes for the Model 2000 are listed in Table E-6. The codes define Model 2000 capabilities as follows:

Table E-6
Model 2000 interface function codes

Code	Interface function
SH1	Source Handshake capability
AH1	Acceptor Handshake capability
T5	Talker (basic talker, talk-only, serial poll, unaddressed to talk on LAG)
L4	Listener (basic listener, unaddressed to listen on TAG)
SR1	Service Request capability
RL1	Remote/Local capability
PP0	No Parallel Poll capability
DC1	Device Clear capability
DT1	Device Trigger capability
C0	No Controller capability
E1	Open collector bus drivers
TE0	No Extended Talker capability
LE0	No Extended Listener capability

SH (Source Handshake Function) — SH1 defines the ability of the instrument to initiate the transfer of message/data over the data bus.

AH (Acceptor Handshake Function) — AH1 defines the ability of the instrument to guarantee proper reception of message/data transmitted over the data bus.

T (Talker Function) — The ability of the instrument to send data over the bus to other devices is provided by the T function. Instrument talker capabilities (T5) exist only after the instrument has been addressed to talk.

L (Listener Function) — The ability for the instrument to receive device-dependent data over the bus from other devices is provided by the L function. Listener capabilities (L4) of the instrument exist only after it has been addressed to listen.

SR (Service Request Function) — SR1 defines the ability of the instrument to request service from the controller.

RL (Remote-Local Function) — RL1 defines the ability of the instrument to be placed in the remote or local modes.

PP (Parallel Poll Function) — The instrument does not have parallel polling capabilities (PP0).

DC (Device Clear Function) — DC1 defines the ability of the instrument to be cleared (initialized).

DT (Device Trigger Function) — DTI defines the ability of the Model 2002 to have readings triggered.

C (Controller Function) — The instrument does not have controller capabilities (C0).

TE (Extended Talker Function) — The instrument does not have extended talker capabilities (TE0).

LE (Extended Listener Function) — The instrument does not have extended listener capabilities (LE0).

E (Bus Driver Type) — The instrument has open-collector bus drivers (E1).

F

IEEE-488 and SCPI Conformance Information

Introduction

The IEEE-488.2 standard requires specific information about how the Model 2000 implements the standard. Paragraph 4.9 of the IEEE-488.2 standard (Std 488.2-1987) lists the documentation requirements. Table F-1 provides a summary of the requirements, and provides the information or references the manual for that information. Table F-2 lists the coupled commands used by the Model 2000.

The Model 2000 complies with SCPI version 1991.0. Tables 5-2 through 5-11 list the SCPI confirmed commands, and the non-SCPI commands implemented by the Model 2000.

Table F-1
IEEE-488 documentation requirements

	Requirements	**Description or reference**
(1)	IEEE-488 Interface Function Codes.	See Appendix E.
(2)	Behavior of 2000 when the address is set outside the range 0-30.	Cannot enter an invalid address.
(3)	Behavior of 2000 when valid address is entered.	Address changes and bus resets.
(4)	Power-On Setup Conditions.	Determine by :SYSTem:POSetup (Section 5).
(5)	Message Exchange Options:	
(a)	Input buffer size.	256 bytes.
(b)	Queries that return more than one response message unit.	None.
(c)	Queries that generate a response when parsed.	All queries (Common Commands and SCPI).
(d)	Queries that generate a response when read.	None.
(e)	Coupled commands.	See Table F-2.
(6)	Functional elements required for SCPI commands.	Contained in SCPI command subsystems tables (see Tables 5-2 through 5-11).
(7)	Buffer size limitations for block data.	Block display messages: 12 characters max,
(8)	Syntax restrictions.	See “Programming Syntax” in Section 4.
(9)	Response syntax for every query command.	See “Programming Syntax” in Section 4.
(10)	Device-to-device message transfer that does not follow rules of the standard.	None.
(11)	Block data response size.	See “Display Subsystem” in Section 5.
(12)	Common Commands implemented by 2000.	See “Common Commands” in Section 4.
(13)	Calibration query information.	See Calibration Manual.
(14)	Trigger macro for *DDT.	Not applicable.

Table F-1 (cont.)
IEEE-488 documentation requirements

	Requirements	**Description or reference**
(15)	Macro information	Not applicable.
(16)	Response to *IDN (identification).	See “Common Commands” in Section 4.
(17)	Storage area for *PUD and *PUD?	Not applicable.
(18)	Resource description for *RDT and *RDT?	Not applicable.
(19)	Effects of *RST, *RCL and *SAV.	See “Common Commands” in Section 4.
(20)	*TST information.	See “Common Commands” in Section 4.
(21)	Status register structure.	See “Status structure” in Section 4.
(22)	Sequential or overlapped commands.	All are sequential except :INIT and :INIT:CONT ON, which are overlapped.
(23)	Operation complete messages.	*OPC, *OPC? and *WAI; see “Common Commands” in Section 4.

Table F-2
Coupled commands

Command	Also changes	To
:TRAC:POIN	:TRAC:FEED:CONT	NEV
:TRAC:CLE	:TRAC:FEED:CONT	NEV
Sense Subsystem Commands:		
...:RANG:UPP	...:RANG:AUTO	OFF
...:REF:ACQ	...:REF	presently displayed reading
:ROUT:CLOS	:ROUT:SCAN:LSEL	NONE
:ROUT:OPEN:ALL	:ROUT:SCAN:LSEL	NONE
:ROUT:SCAN:INT	:ROUT:SCAN:LSEL	INT

... = Valid function command words (i.e. :VOLT:DC, :VOLT:AC, etc.)

Index

Symbol

:ABORt command 5-70
:AVERage commands 5-46
:AZERo commands 5-64
:BORDer command 5-30
:CALCulate subsystem 5-20
CALCulate[1] 5-20
:CALCulate2 5-22
:CALCulate3 5-24
:CLEar command 5-64, 5-68
:CLOSe commands 5-32
*CLS — Clear Status 4-40
:CONDition? command 5-58
:CONFigure command 5-3
:CONTinuity command 5-57
:DATA command 5-28, 5-38
:DATA? command 5-69
:DIGits command 5-45
:DIODe command 5-51
:ENABle command 5-56
:ERRor? command 5-63
*ESE <NRf> — Event Enable 4-40
*ESE? — Event Enable Query 4-40
*ESR? — Event Status Register Query 4-42
[:EVENt]? command 5-52
:FEED command 5-69
:FETCh? command 5-4
:FORMat subsystem 5-28
:FREE? command 5-68
:FRSWitch? command 5-62
:FUNCtion Command 5-37
*IDN? — Identification Query 4-43
:INITiate commands 5-70
:KEY <Nrf> command 5-65
:MEASure command 5-6
*OPC — Operation Complete 4-44
:OPEN:ALL command 5-33
*OPC? — Operation Complete Query 4-46
*OPT? — Option Identification Query 4-47
:POINts command 5-68
:POSetup <name> command 5-62
:PRESet command 5-61
:PRESET command 5-58
:QUEue commands 5-59
:RANGe commands 5-41
*RCL — Recall 4-47
:READ? command 5-5
:REFerence <n> commands 5-43
*RST — RESET 4-48
*SAV — Save 4-48
:SCAN commands 5-35
[SENSe[1]] subsystem 5-37
*SRE <NRf> — Service Request Enable 4-48
*SRE? — Service Request Enable Query 4-48
*STB? — Status Byte Query 4-50
:SYSTem subsystem 5-61
:TEMPerature <name> 5-74
:THReshold commands 5-48
:TRACe subsystem 5-68
*TRG — Trigger 4-51
:TRIGger commands 5-71
*TST? — Self-Test Query 4-51
:UNIT subsystem 5-74
:VERSion? command 5-63
:VOLTage commands 5-74
◀ and ▶ keys 3-23

A

About program fragments 4-13
AC voltage offset 2-21
Accessories 1-5
Accuracy calcualtions A-7
Adapters 1-6
Additional derating factors A-9
Address commands E-10
Addressed multiline commands E-10
AMPS fuse replacement 2-23
Autoranging 3-3

B

Bandwidth 3-7
Bandwidth command 5-48
Basic measurements 2-1
BEEPer command 5-61
Buffer operations 3-17
Buffer statistics 3-19
Bus commands E-8
Bus description E-4
Bus lines E-6
Bus management lines E-6

C

Cables 1-6
Calculate subsystem 5-20
Calculating AC characteristics accuracy A-7
Calculating dB characteristics accuracy A-9
Calculating dBm characteristics accuracy A-8
Calculating DC characteristics accuracy A-7
Calibration 3-32
Carrying case 1-6
Case sensitivity 4-34
Changing function and range C-2
Command codes E-11
Command execution rules 4-37
Command parameters 4-32
Command path rules 4-37
Command words 4-32
Commands 4-32
Common commands 4-39, E-11
Condition registers 4-20
CONFigure Command 5-3
Configuration 2-29, 2-31, 2-32, 2-33
Connections 2-18, 2-22, 2-24, 2-27, 2-28, 2-34, 2-35
Control source 3-8
Controlling the Model 2000 via the RS-232 COM2 port C-12
Counters 3-10, 3-27
Crest factor 2-18

D

Data lines E-6
dB calculation 2-33
dBm calculation 2-32
DCL (device clear) 4-16
Delay 3-9
Device actions 3-10
Digits 3-5
Display 2-17
DISPlay subsystem 5-26

E

ELEMents command 5-31
Enable registers 4-21
Enabling limits 3-21
Error messages 2-17, 4-8, 4-18, B-1
Error queue 4-24
Event detection 3-8
Event registers 4-20
Example programs C-1
External scan card use 3-22
External scanning 3-30
External triggering 3-11
External triggering example 3-12
External triggering with BC connections 3-16

F

Feature overview 1-2
FETCh? command 5-4
Filter 3-4
Filter types 3-4
Fluke Model 8840A/8842A Digital Multimeter 4-5
Front panel GPIB operation 4-18
Front panel scanner controls 3-23
Front panel summary 2-3

G

Gate time 2-26
General bus commands (associated statements) 4-14
General information 1-1
General purpose probes 1-5
Generating SRQ on buffer full C-5
GET (group execute trigger) 4-17
GPIB bus 4-3
GPIB bus connections 4-10
GPIB bus operation and reference 4-9
GPIB bus standards 4-9
GPIB primary address 2-16
GPIB status indicators 4-18
GTL (go to local) 4-15

H

Handshake lines E-7
High energy circuit safety precautions 2-11
HOLD Command 5-39
Hold example 3-11

I

Idle 3-8, 4-30
IEEE command groups E-14
IEEE-488 Bus Overview E-1
IEEE-488 Conformance Information F-1
IFC (interface clear) 4-15
Initiate 4-30
Inspection 1-4
Install the universal language driver 4-12
Interface function codes E-15
Internal scan card use 3-22

K

Keithley Model 199 Digital Multimeter 4-5

L

Limit operations 3-20
Line frequency query 5-67
Line power connection 2-8
LLO (local lockout) 4-15
LOCAL key 4-18
Long-form versions 4-34
Low level considerations 2-19
Low thermal probes 1-6

M

Manual addenda 1-3
Manual ranging 3-3
Math 2-30
Maximum readings 3-3
MEASure command 5-6
Measurement configuration 3-3
Measurement options 3-1
Measuring continuity 2-34
Measuring current 2-22
Measuring frequency 2-26
Measuring period 2-26
Measuring resistance 2-24
Measuring temperature 2-28
Measuring voltage 2-18
Message exchange protocol 4-38
Model 199 and 8840A/8842A Commands D-1
Multiple command messages 4-36
Multiple response messages 4-38
MX + B 2-30

O

One-shot triggering C-4
Optimizing measurement accuracy A-10
Optimizing measurement speed A-11
Options 1-5
Output queue 4-24
Output trigger 3-10

P

Percent 2-31
Power-on defaults 2-12
Power-up 2-8
Power-up sequence 2-10
Program examples C-2
Program message terminator (PMT) 4-37
Program messages 4-36
Programming syntax 4-32

Q

Query commands 4-34
Queues 4-24
QuickBASIC 4.5 programming 4-12

R

Rack mount kits 1-6
Range 2-35, 3-3
Rate 3-6
READ? command 5-5
Reading hold (autosettle) 3-10
Rear panel summary 2-6
Recalling readings 3-18
Relative 3-5
Remote operation 4-1
REN (remote enable) 4-14
Replacing fuse 2-9
Response message terminator (RMT) 4-38
Response messages 4-38
Response time 3-5
ROUTe subsystem 5-32
RS-232 4-3
RS-232 connections 4-8
RS-232 operation 4-6

S

Safety symbols and terms 1-3
Scan operations 3-22
Scanner cards 1-5
Scanning examples 3-27
Scanning overview 3-22
Scanning trigger model additions 3-24
SCPI 4-5
SCPI command reference 5-1
SCPI command subsystems reference tables 5-7
SCPI commands E-11
SCPI Conformance Information F-1
SCPI Signal oriented measurement commands 5-3
SDC (selective device clear) 4-16
Selecting a language 4-4
Selecting an interface 4-2
Selecting baud rate 4-6
Selecting signal handshake (flow control) 4-7
Selecting the primary address 4-12
Self-test 3-32
Sending a response message 4-38
Sending baud rate 4-6
Serial poll and SRQ 4-28
Service request enable register 4-27
Setting limit values 3-20
Setting line voltage 2-9
Setting terminator 4-7
Shielding 2-19, 2-25
Short-form rules 4-35
Short-form versions 4-34
Single command messages 4-36

Specifications 1-3, A-1
Speed Commands 5-40
SPE, SPD (serial polling 4-17
Status byte and service request (SRQ) 4-25
Status byte register 4-26
Status messages 2-17, 4-18, B-1
Status structure 4-19
Status subsystem 5-52
Stepping trigger model additions 3-24
Storing readings 3-17
Storing readings in buffer C-6
System operations 3-32

T

Taking readings using the :READ? command C-12
Taking readings with the scanner card C-8
Testing diodes 2-35
Thermal EMFs 2-20
Thermocouple commands 5-49
Threshold resistance level 2-34
Timing 3-28
Trigger level 2-26
Trigger model 3-8
Trigger model operation 4-30
Trigger model (GPIB operation) 4-29
Trigger operations 3-8
Trigger subsystem 5-70
Typical command sequences E-13

U

Unaddress commands E-10
Uniline commands E-9
Universal multiline commands E-9
Using common commands and SCPI commands in the same messages 4-37
Using external scanner cards 3-22
Using OPEN and CLOSE keys 3-23
Using SHIFT-CONFIG to configure stepping and scanning 3-26

V

Voltmeter complete 3-12

W

Warm-up time 2-16
Warranty information 1-3

KEITHLEY

Service Form

Model No. _____ **Serial No.**_____**Date**_____

Name and Telephone No. _____

Company _____

List all control settings, describe problem and check boxes that apply to problem. _____

_____

_____

❑ Intermittent ❑ Analog output follows display ❑ Particular range or function bad; specify

_____

❑ IEEE failure ❑ Obvious problem on power-up ❑ Batteries and fuses are OK

❑ Front panel operational ❑ All ranges or functions are bad ❑ Checked all cables

Display or output (check one)

❑ Drifts ❑ Unable to zero ❑ Unstable

❑ Overload ❑ Will not read applied input

❑ Calibration only ❑ Certificate of calibration required ❑ Data required

(attach any additional sheets as necessary)

Show a block diagram of your measurement including all instruments connected (whether power is turned on or not). Also, describe signal source.

Where is the measurement being performed? (factory, controlled laboratory, out-of-doors, etc.)_____

_____

What power line voltage is used?_____ Ambient temperature?_____°F

Relative humidity? _____Other?_____

Any additional information. (If special modifications have been made by the user, please describe.)

_____

_____

Be sure to include your name and phone number on this service form.

Specifications are subject to change without notice.

All Keithley trademarks and trade names are the property of Keithley Instruments, Inc. All other trademarks and trade names are the property of their respective companies.

KEITHLEY

Keithley Instruments, Inc. 28775 Aurora Road • Cleveland, Ohio 44139 • 440-248-0400 • Fax: 440-248-6168
1-888-KEITHLEY (534-8453) • www.keithley.com

Sales Offices:	**BELGIUM:**	**Bergensesteenweg 709 • B-1600 Sint-Pieters-Leeuw • 02-363 00 40 • Fax: 02/363 00 64**
	CHINA:	**Yuan Chen Xin Building, Room 705 • 12 Yumin Road, Dewai, Madian • Beijing 100029 • 8610-6202-2886 • Fax: 8610-6202-2892**
	FINLAND:	**Tietäjäntie 2 • 02130 Espoo • Phone: 09-54 75 08 10 • Fax: 09-25 10 51 00**
	FRANCE:	**3, allée des Garays • 91127 Palaiseau Cédex • 01-64 53 20 20 • Fax: 01-60 11 77 26**
	GERMANY:	**Landsberger Strasse 65 • 82110 Germering • 089/84 93 07-40 • Fax: 089/84 93 07-34**
	GREAT BRITAIN:	**Unit 2 Commerce Park, Brunel Road • Theale • Berkshire RG7 4AB • 0118 929 7500 • Fax: 0118 929 7519**
	INDIA:	**Flat 2B, Willocrissa • 14, Rest House Crescent • Bangalore 560 001 • 91-80-509-1320/21 • Fax: 91-80-509-1322**
	ITALY:	**Viale San Gimignano, 38 • 20146 Milano • 02-48 39 16 01 • Fax: 02-48 30 22 74**
	KOREA:	**FL., URI Building • 2-14 Yangjae-Dong • Seocho-Gu, Seoul 137-130 • 82-2-574-7778 • Fax: 82-2-574-7838**
	NETHERLANDS:	**Postbus 559 • 4200 AN Gorinchem • 0183-635333 • Fax: 0183-630821**
	SWEDEN:	**c/o Regus Business Centre • Frosundaviks Allé 15, 4tr • 169 70 Solna • 08-509 04 679 • Fax: 08-655 26 10**
	SWITZERLAND:	**Kriesbachstrasse 4 • 8600 Dübendorf • 01-821 94 44 • Fax: 01-820 30 81**
	TAIWAN:	**1FL., 85 Po Ai Street • Hsinchu, Taiwan, R.O.C. • 886-3-572-9077• Fax: 886-3-572-9031**

© Copyright 2001 Keithley Instruments, Inc.
Printed in the U.S.A.
11/01