SPC TECHNOLOGY

ALL RIGHTS RESERVED. NO PORTION OF THIS PUBLICATION, WHETHER IN WHOLE OR IN PART CAN BE REPRODUCED WITHOUT THE EXPRESS WRITTEN CONSENT OF SPC TECHNOLOGY.

SPC-F005.DWG

REVISIONS

DOC. NO. SPC-F005 * Effective: 7/8/02 * DCP No: 1398

DCP #	REV	DESCRIPTION	DRAWN	DATE	CHECKD	DATE	APPRVD	DATE
2055	A	RELEASED	JN	06/15/09	JWM	06/15/09	JWM	06/15/09

RoHS Compliant

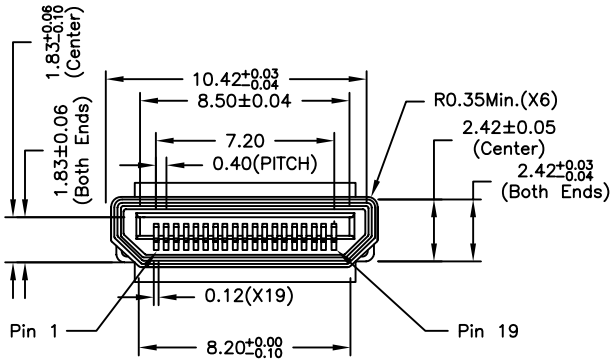

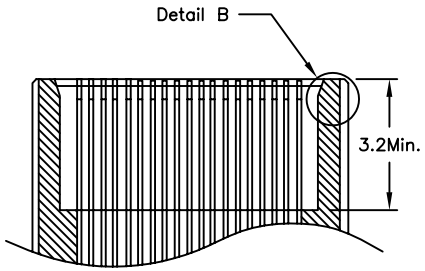

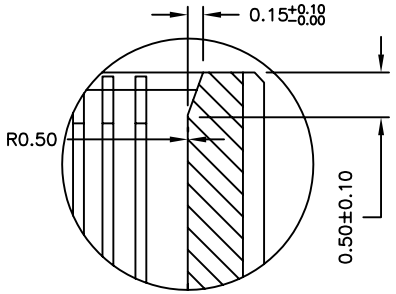

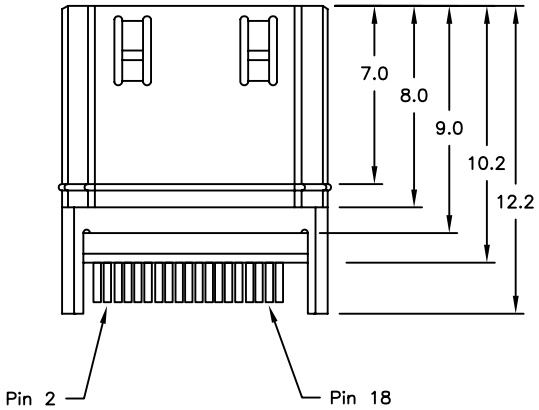

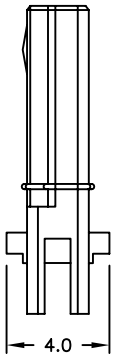

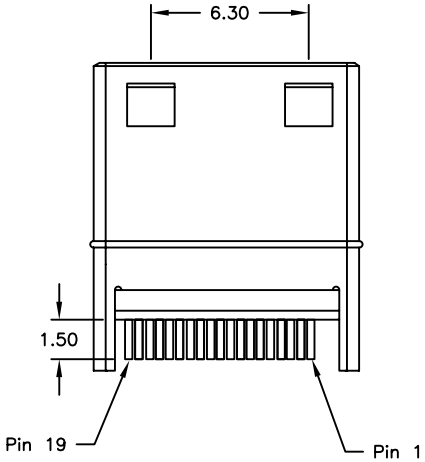

SPECIFICATIONS

-OPERATING CURRENT: 0.5A MAX.
-OPERATING TEMPERATURE: -25°C to +85°C
-DIELECTRIC WITHSTANDING VOLTAGE:
500Volts AC Between Adjacent Terminal (UNMATE)
300Volts AC Between Adjacent Terminal (MATE)
-INSULATION RESISTANCE:
100Mohm min.(unmated); 10MOHM min.(mate)
-CONTACT PLATING: Gold Flash plated in contact area
-SHELL PLATING: Solderable Nickle Plated

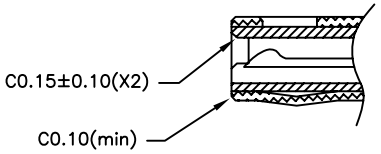

DISCLAIMER:
ALL STATEMENTS AND TECHNICAL INFORMATION CONTAINED HEREIN ARE BASED UPON INFORMATION AND/OR TESTS WE BELIEVE TO BE ACCURATE AND RELIABLE. SINCE CONDITIONS OF USE ARE BEYOND OUR CONTROL, THE USER SHALL DETERMINE THE SUITABILITY OF THE PRODUCT FOR THE INTENDED USE AND ASSUME ALL RISK AND LIABILITY WHATSOEVER IN CONNECTION THEREWITH.

TOLERANCES:
UNLESS OTHERWISE SPECIFIED, DIMENSIONS ARE FOR REFERENCE PURPOSES ONLY.

DRAWN BY:	DATE:
Jason Nash	06/15/09
CHECKED BY:	DATE:
Jeff McVicker	06/15/09
APPROVED BY:	DATE:
Jeff McVicker	06/15/09

DRAWING TITLE: MINI HDMI PLUG, TYPE C PITCH 0.40 SOLDER TYPE

SIZE	DWG. NO.	ELECTRONIC FILE	REV
A	60S019P-301N-B1	06R5630.dwg	A

SCALE: NTS | U.O.M.: Millimeters | SHEET: 1 OF 1