TYPE - CFSStraightIP68

				NPT	Threaded	Fittings
Cat #	US Trade Size	MM	NW	Thread Size	Unit Pack	Part #
CFS-140	1/4"	10	7	PG-7	25	90824
CFS-516	5/16"	12	10	PG-9	25	90833
CFS-10	3/8"	16	12	1/2" NPT	25	90831
CFS-11	1/2"	20	17	1/2" NPT	25	90841
CFS-12	3/4"	25	23	3/4" NPT	25	90851
CFS-13	1"	32	29	1" NPT	10	90861
CFS-14	1-1/4"	40	36	1-1/4" NPT	5	90871
CFS-15	1-1/2'	50	48	1-1/2" NPT	2	90881

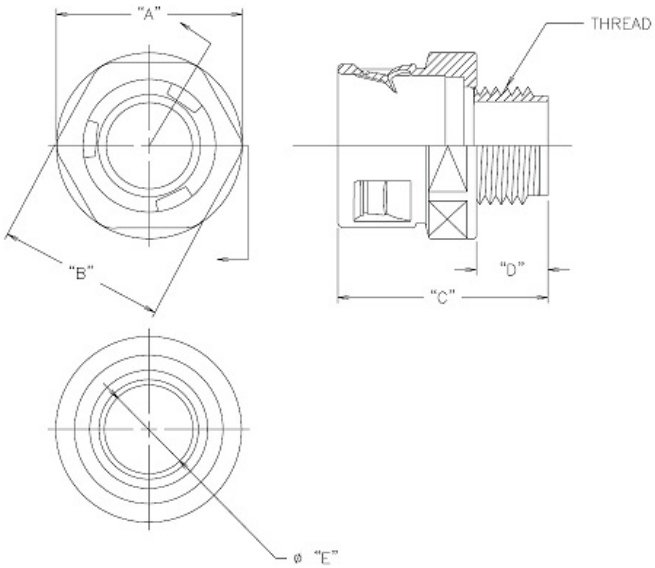

Cat #	U.S. Trade Size	Thread Size	A	B	C	D	E
CF-140	1/4"	PG-7					
CF-516	5/16"	PG-9					
CF-10	3/8"	1/2" NPT	.985	.815	1.380	.500	.495
CF-11	1/2"	1/2" NPT	1.155	1.060	1.510	.500	.585
CF-12	3/4"	3/4" NPT	1.525	1.410	1.680	.540	.745
CF-13	1"	1" NPT	1.730	1.565	1.780	.540	1.030
CF-14	1-1/4"	1-1/4" NPT	2.070	1.975	2.225	.730	1.325
CF-15	1-1/2"	1-1/2" NPT	2.675	2.565	2.350	.700	1.545

TYPE - CFSStraightIP68
IP 68 is the equivalent to NEMA 6 and can withstand water from entering during submersion

Plastic Used: NYLON See the Chemical Resistance Guide

High Mech. Strength	Listed For Direct Burial	Halogen Free	Low Fire Hazard	Accepts Standard Liquidtight Fittings	Self Extinquish	EMI/RFI Shielding	Oil Resistance	Acid Resistance