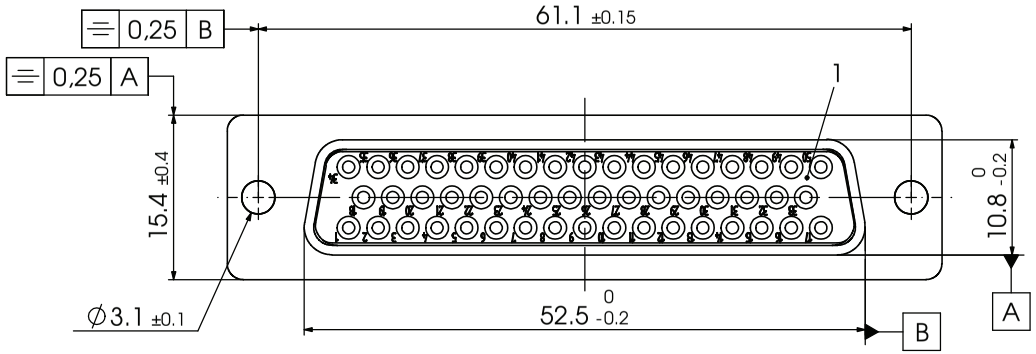

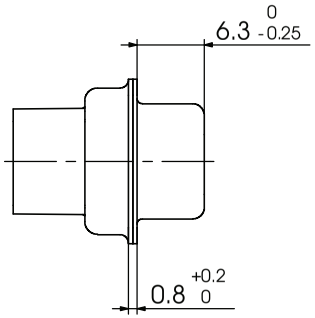

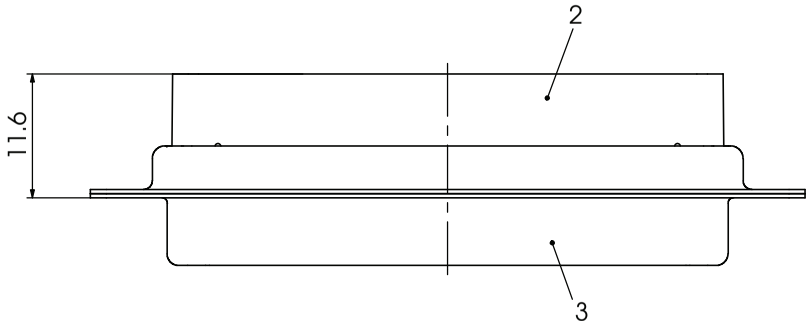

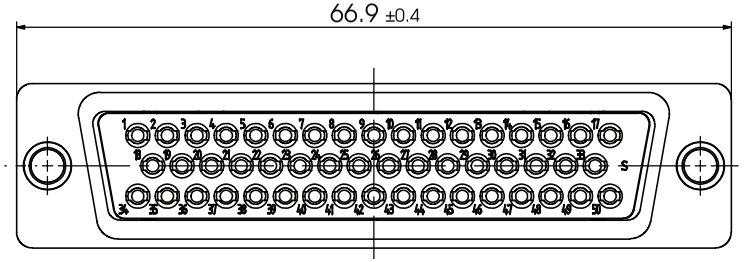

y for series FL or FU

Technical data for modification (FU)

Crimp contacts FK20S (AWG 20-24/1,3µm Au) included in delivery.

3	1	Shell	Steel	tin plated
2	1	Insulator rear part	PEI (-55°C - +130°C)	green
1	1	Insulator front part	PBT	green
No.	*St.*	*Part*	*Type Description/Material*	*Surface plating/Colour/Class*

Technical data for modification (FL)

② Crimp contacts not supplied with connector. Contacts must be ordered separately.

3	1	Shell	Steel	tin plated
2	1	Insulator rear part	PA66 (-55°C - +115°C)	black
1	1	Insulator front part	PBT	black
No.	*St.*	*Part*	*Type Description/Material*	*Surface plating/Colour/Class*

			Measurement without tolerance acc. to ISO 2768-m	SCALE 2:1	TITLE D-Sub Crimp Connector
			NAME / DATE		
			DRAWN	Denzinger 26-11-2003	
			CHECKED	sschref 24-02-2006	
2	24-02-2006	21782	FCT group fctgroup.com		DWG.NO. Fy50S7-K121 — REV. 2
1					
REV.	DATE	CH.-NO.	ORIGINAL: DIN A3-DRAWING AS A FILE		REPLACEMENT FOR: Fy50S7-K121 a — PAGES 1

COMMENT:
ALL RIGHTS ARE RESERVED BY US FOR THIS DRAWING, WITHOUT OUR PRIOR CONSENT.
IT MAY NEITHER BE DUBLICATED NOR MADE AVAILABLE TO A THIRD PARTY,
AND IT ALSO MAY NOT BE IMPROPERLY USED BY TE RECEIVER, OR A THIRD PARTY.