FAIRCHILD

September 2014

H11L1M, H11L2M, H11L3M
6-Pin DIP Schmitt Trigger Output Optocoupler

Features

- High Data Rate, 1 MHz Typical (NRZ)
- Free from Latch-up and Oscilliation Throughout Voltage and Temperature Ranges
- Microprocessor Compatible Drive
- Logic Compatible Output Sinks 16 mA at 0.4 V Maximum
- Guaranteed On/Off Threshold Hysteresis
- Wide Supply Voltage Capability, Compatible with All Popular Logic Systems
- Safety and Regulatory Approvals:
  - UL1577, 4,170 VAC_{RMS} for 1 Minute
  - DIN-EN/IEC60747-5-5, 850 V Peak Working Insulation Voltage

Applications

- Logic-to-Logic Isolator
- Programmable Current Level Sensor
- Line Receiver—Eliminate Noise and Transient Problems
- AC to TTL Conversion—Square Wave Shaping
- Digital Programming of Power Supplies
- Interfaces Computers with Peripherals

Description

The H11LXM series has a high-speed integrated circuit detector optically coupled to a gallium-arsenide infrared emitting diode. The output incorporates a Schmitt trigger, which provides hysteresis for noise immunity and pulse shaping. The detector circuit is optimized for simplicity of operation and utilizes an open-collector output for maximum application flexibility.

Schematic

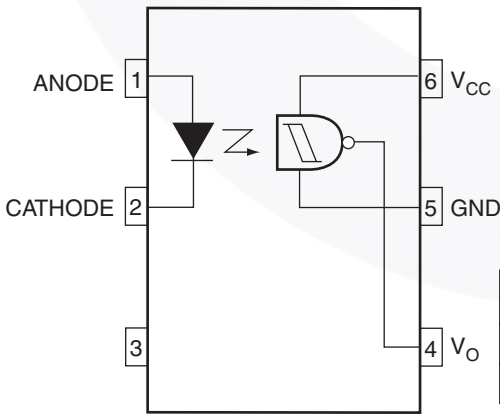

Figure 1. Schematic

Truth Table

Input	Output
H	L
L	H

Package Outlines

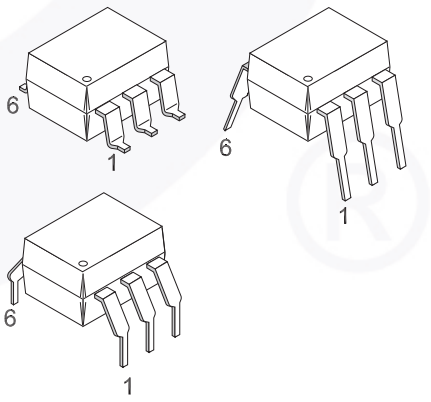

Figure 2. Package Outlines

©2005 Fairchild Semiconductor Corporation

Safety and Insulation Ratings

As per DIN EN/IEC 60747-5-5, this optocoupler is suitable for “safe electrical insulation” only within the safety limit data. Compliance with the safety ratings shall be ensured by means of protective circuits.

Parameter		Characteristics
Installation Classifications per DIN VDE 0110/1.89 Table 1, For Rated Mains Voltage	< 150 V_{RMS}	I–IV
	< 300 V_{RMS}	I–IV
Climatic Classification		55/100/21
Pollution Degree (DIN VDE 0110/1.89)		2
Comparative Tracking Index		175

Symbol	Parameter	Value	Unit
V_{PR}	Input-to-Output Test Voltage, Method A, V_{IORM} x 1.6 = V_{PR}, Type and Sample Test with t_m = 10 s, Partial Discharge < 5 pC	1360	V_{peak}
	Input-to-Output Test Voltage, Method B, V_{IORM} x 1.875 = V_{PR}, 100% Production Test with t_m = 1 s, Partial Discharge < 5 pC	1594	V_{peak}
V_{IORM}	Maximum Working Insulation Voltage	850	V_{peak}
V_{IOTM}	Highest Allowable Over-Voltage	6000	V_{peak}
	External Creepage	≥ 7	mm
	External Clearance	≥ 7	mm
	External Clearance (for Option TV, 0.4" Lead Spacing)	≥ 10	mm
DTI	Distance Through Insulation (Insulation Thickness)	≥ 0.5	mm
T_S	Case Temperature[1]	175	°C
$I_{S,INPUT}$	Input Current[1]	350	mA
$P_{S,OUTPUT}$	Output Power[1]	800	mW
R_{IO}	Insulation Resistance at T_S, V_{IO} = 500 V[1]	> 10^9	Ω

Note:

1. Safety limit values – maximum values allowed in the event of a failure.

Absolute Maximum Ratings

Stresses exceeding the absolute maximum ratings may damage the device. The device may not function or be operable above the recommended operating conditions and stressing the parts to these levels is not recommended. In addition, extended exposure to stresses above the recommended operating conditions may affect device reliability. The absolute maximum ratings are stress ratings only. T_A = 25°C unless otherwise specified.

Symbol	Parameters	Value	Units
Total Device			
T_{STG}	Storage Temperature	-40 to +125	°C
T_{OPR}	Operating Temperature	-40 to +85	°C
T_J	Junction Temperature	-40 to +125	°C
T_{SOL}	Lead Solder Temperature	260 for 10 seconds	°C
P_D	Total Device Power Dissipation at 25°C	250	mW
	Derate Above 25°C	2.94	mW/°C
Emitter			
I_F	Continuous Forward Current	30	mA
V_R	Reverse Voltage	6	V
I_F(pk)	Forward Current – Peak (1 µs pulse, 300 pps)	100	mA
P_D	LED Power Dissipation	60	mW
Detector			
P_D	Detector Power Dissipation	150	mW
V_O	V_{45} Allowed Range	0 to 16	V
V_{CC}	V_{65} Allowed Range	3 to 16	V
I_O	I_4 Output Current	50	mA

©2005 Fairchild Semiconductor Corporation

Electrical Characteristics

T_A = 25°C unless otherwise specified.

Individual Component Characteristics

Symbol	Parameters	Test Conditions	Device	Min.	Typ.	Max.	Units
Emitter							
V_F	Input Forward Voltage	I_F = 10 mA	All		1.2	1.5	V
		I_F = 0.3 mA		0.75	1.0		
I_R	Reverse Current	V_R = 3 V	All			10	µA
C_J	Capacitance	V = 0, f = 1.0 MHz	All			100	pF
Detector							
V_{CC}	Operating Voltage Range		All	3		15	V
$I_{CC(off)}$	Supply Current	I_F = 0, V_{CC} = 5 V	All		1.6	5.0	mA
I_{OH}	Output Current, High	I_F = 0, V_{CC} = V_O = 15 V	All			100	µA

Transfer Characteristics

Symbol	Parameter	Test Conditions	Device	Min.	Typ.	Max.	Units
DC Characteristics							
$I_{CC(on)}$	Supply Current	I_F = 10 mA, V_{CC} = 5 V	All		1.6	5.0	mA
V_{OL}	Output Voltage, Low	R_L= 270 Ω,V_{CC} = 5 V, I_F = $I_{F(on)}$ max.	All		0.2	0.4	V
$I_{F(on)}$	Turn-On Threshold Current(2)	R_L = 270 Ω, V_{CC} = 5 V	H11L1M			1.6	mA
			H11L2M			10.0	
			H11L3M			5.0	
$I_{F(off)}$	Turn-Off Threshold Current	R_L = 270 Ω, V_{CC} = 5 V	All	0.3	1.0		mA
$I_{F(off)}/I_{F(on)}$	Hysteresis Ratio	R_L = 270 Ω, V_{CC} = 5 V	All	0.50	0.75	0.90	
AC Characteristics, Switching Speed							
t_{on}	Turn-On Time	R_L = 270 Ω, V_{CC} = 5 V, I_F = $I_{F(on)}$, T_A = 25°C	All		1.0	4.0	µs
t_f	Fall Time	R_L = 270 Ω, V_{CC} = 5 V, I_F = $I_{F(on)}$, T_A = 25°C	All		0.1		µs
t_{off}	Turn-Off Time	R_L = 270 Ω, V_{CC} = 5 V, I_F = $I_{F(on)}$, T_A = 25°C	All		1.2	4.0	µs
t_r	Rise Time	R_L = 270 Ω, V_{CC} = 5 V, I_F = $I_{F(on)}$, T_A = 25°C	All		0.1		µs
	Data Rate		All		1.0		MHz

Isolation Characteristics

Symbol	Parameter	Test Conditions	Min.	Typ.	Max.	Units
V_{ISO}	Input-Output Isolation Voltage	t = 1 Minute	4170			VAC_{RMS}
C_{ISO}	Isolation Capacitance	V_{I-O} = 0 V, f = 1 MHz		0.4	0.6	pF
R_{ISO}	Isolation Resistance	V_{I-O} = ± 500 VDC, T_A = 25°C	10^{11}			Ω

Note:

2. Maximum $I_{F(ON)}$ is the maximum current required to trigger the output. For example, a 1.6 mA maximum trigger current would require the LED to be driven at a current greater than 1.6 mA to guarantee the device turns on. A 10% guard band is recommended to account for degradation of the LED over its lifetime. The maximum allowable LED drive current is 30 mA.

©2005 Fairchild Semiconductor Corporation

Typical Performance Curves

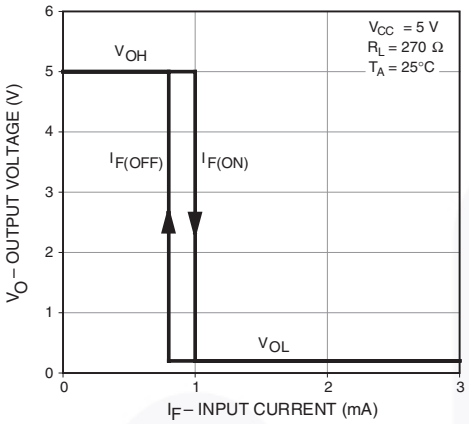

Figure 3. Transfer Characteristics

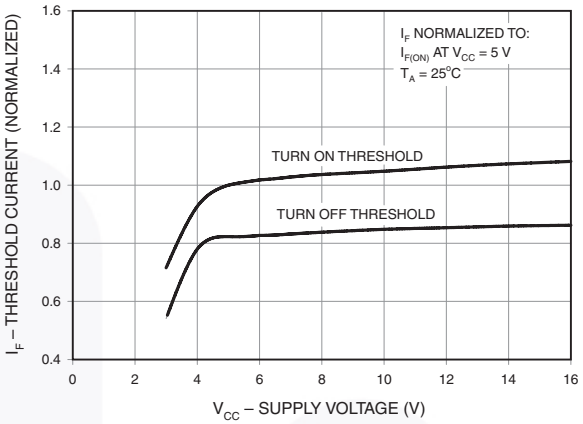

Figure 4. Threshold Current vs. Supply Voltage

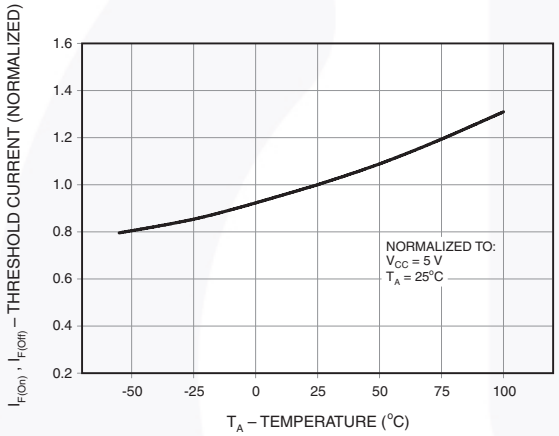

Figure 5. Threshold Current vs. Supply Temperature

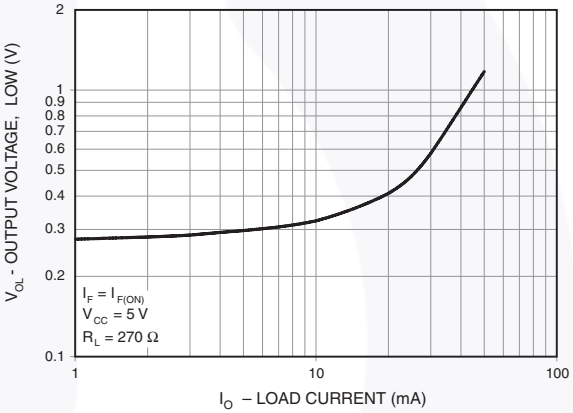

Figure 6. Output Voltage, Low vs. Load Current

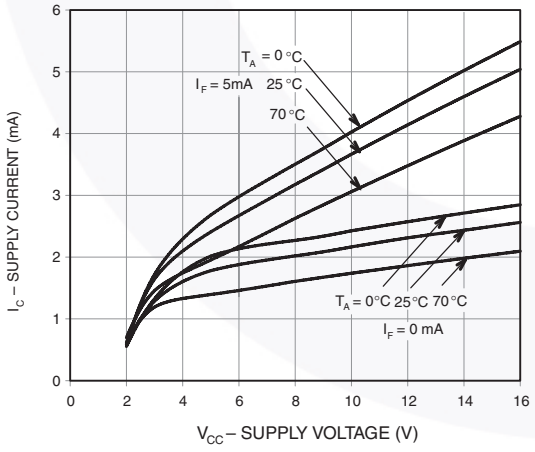

Figure 7. Supply Current vs. Supply Voltage

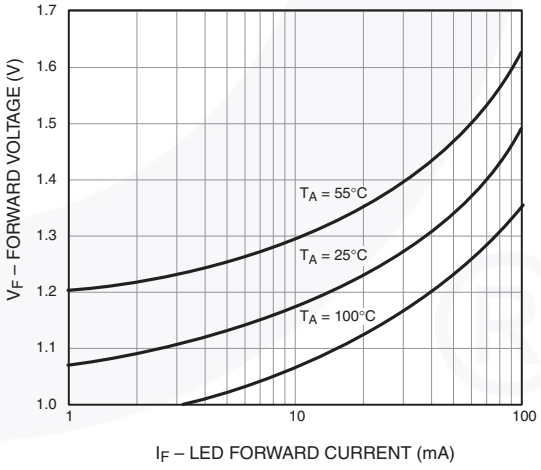

Figure 8. LED Forward Voltage vs. Forward Current

Typical Performance Curves (Continued)

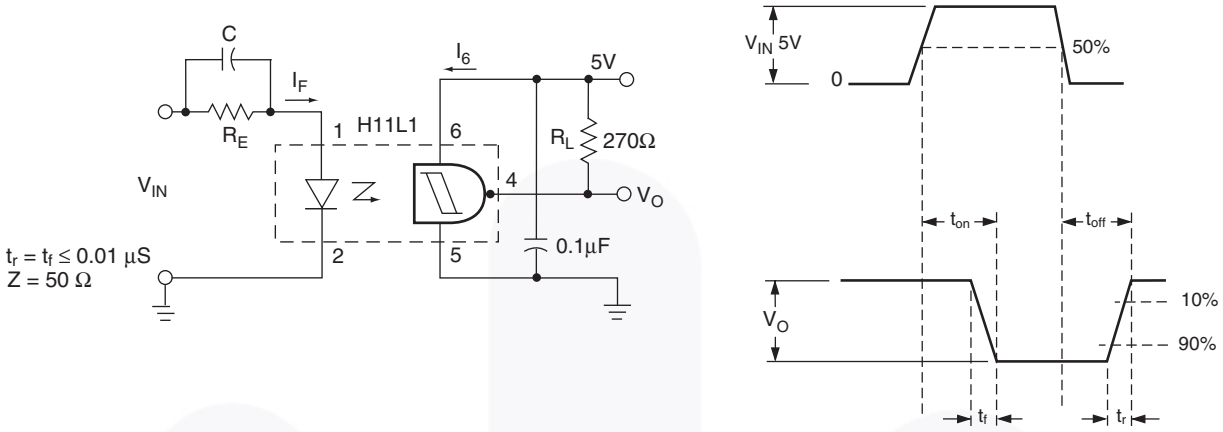

Figure 9. Switching Test Circuit and Waveforms

Reflow Profile

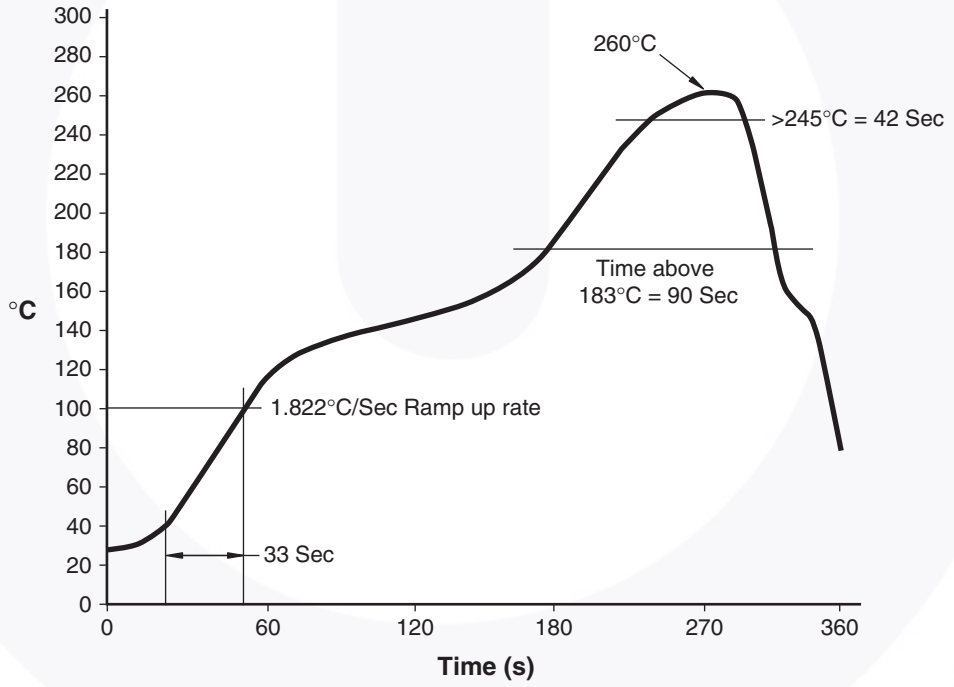

Figure 10. Reflow Profile

Ordering Information

Part Number	Package	Packing Method
H11L1M	DIP 6-Pin	Tube (50 Units)
H11L1SM	SMT 6-Pin (Lead Bend)	Tube (50 Units)
H11L1SR2M	SMT 6-Pin (Lead Bend)	Tape and Reel (1000 Units)
H11L1VM	DIP 6-Pin, DIN EN/IEC60747-5-5 Option	Tube (50 Units)
H11L1SVM	SMT 6-Pin (Lead Bend), DIN EN/IEC60747-5-5 Option	Tube (50 Units)
H11L1SR2VM	SMT 6-Pin (Lead Bend), DIN EN/IEC60747-5-5 Option	Tape and Reel (1000 Units)
H11L1TVM	DIP 6-Pin, 0.4” Lead Spacing, DIN EN/IEC60747-5-5 Option	Tube (50 Units)

Note:

3. The product orderable part number system listed in this table also applies to the H11L2M and H11L3M product families.

Marking Information

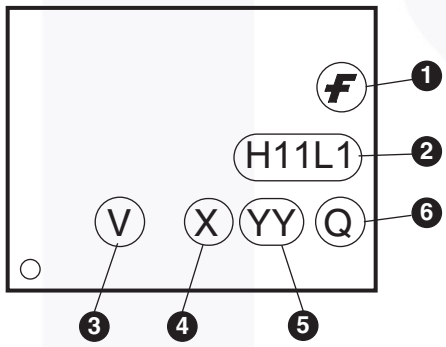

Figure 11. Top Mark

Table 1. Top Mark Definitions

1	Fairchild Logo
2	Device Number
3	DIN EN/IEC60747-5-5 Option (only appears on component ordered with this option)
4	One-Digit Year Code, e.g., “4”
5	Digit Work Week, Ranging from “01” to “53”
6	Assembly Package Code

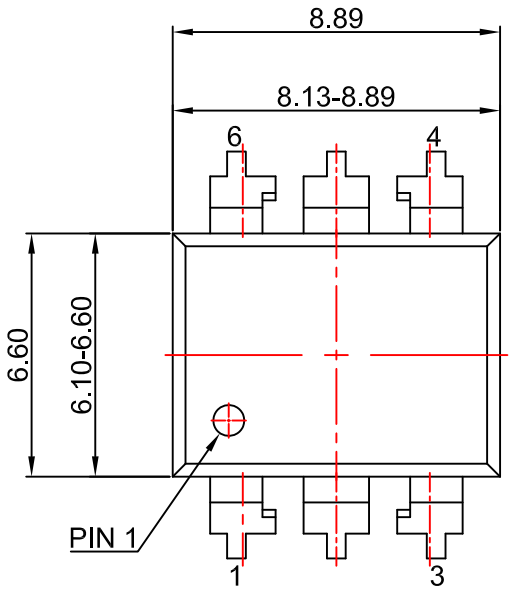

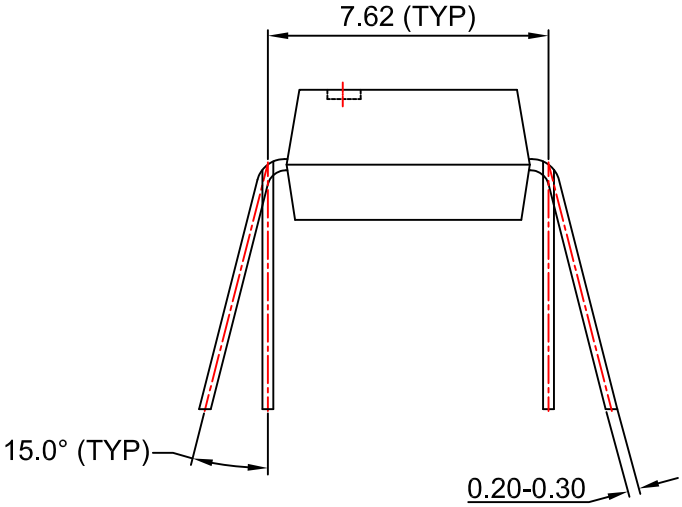

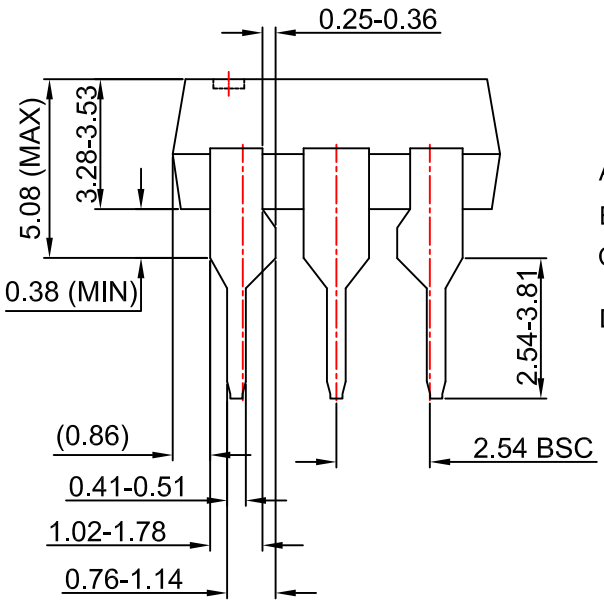

NOTES:

A) NO STANDARD APPLIES TO THIS PACKAGE.

B) ALL DIMENSIONS ARE IN MILLIMETERS.

C) DIMENSIONS ARE EXCLUSIVE OF BURRS, MOLD FLASH, AND TIE BAR EXTRUSION

D) DRAWING FILENAME AND REVSION: MKT-N06BREV4.

FAIRCHILD

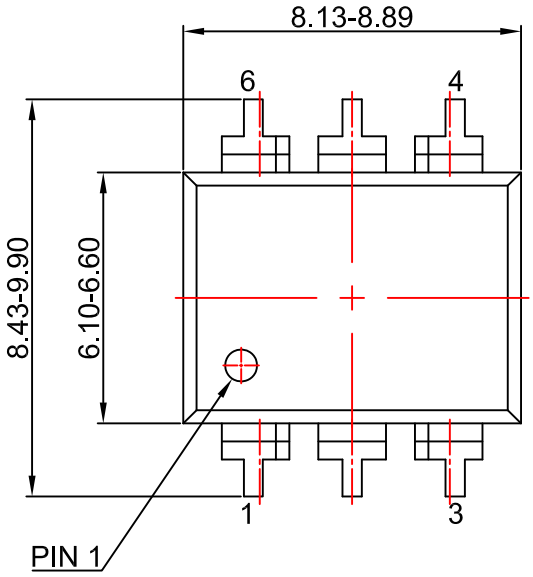

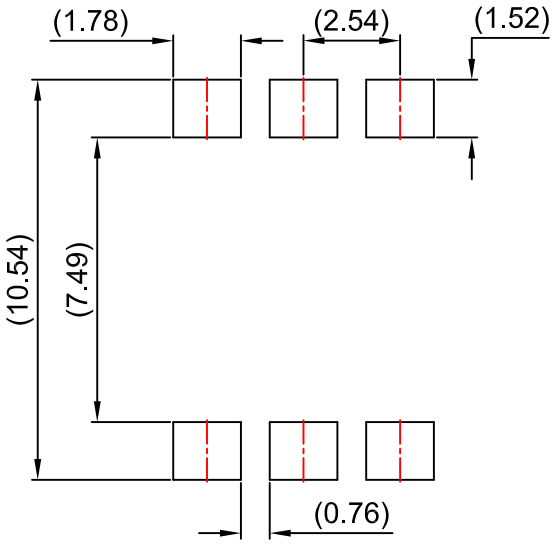

LAND PATTERN RECOMMENDATION

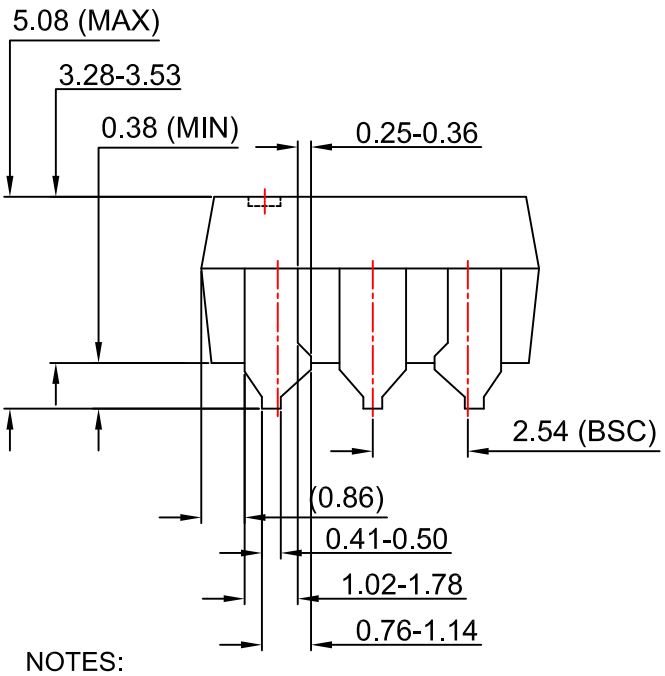

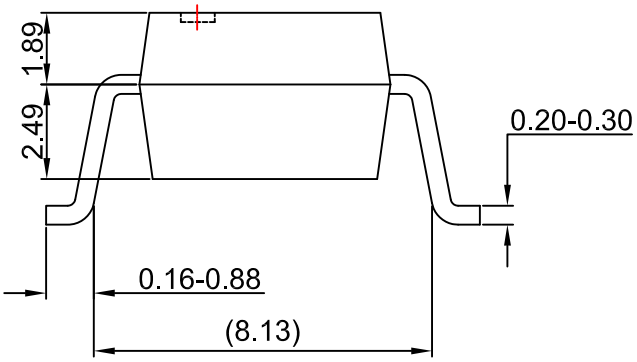

NOTES:

A) NO STANDARD APPLIES TO THIS PACKAGE.

B) ALL DIMENSIONS ARE IN MILLIMETERS.

C) DIMENSIONS ARE EXCLUSIVE OF BURRS, MOLD FLASH, AND TIE BAR EXTRUSION

D) DRAWING FILENAME AND REVSION : MKT-N06CREV4.

FAIRCHILD

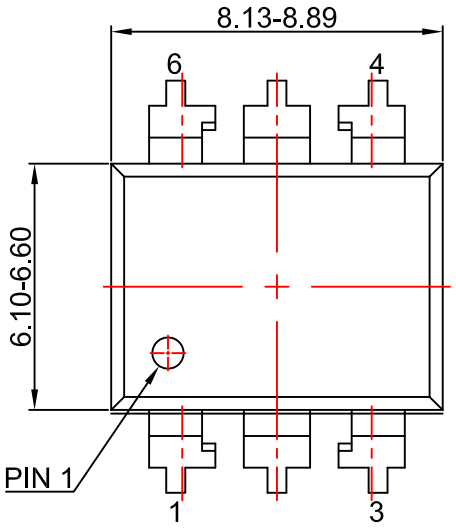

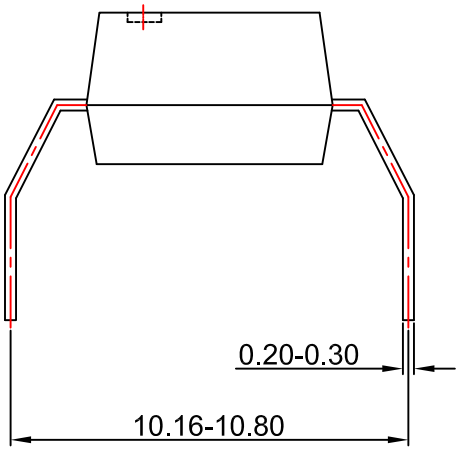

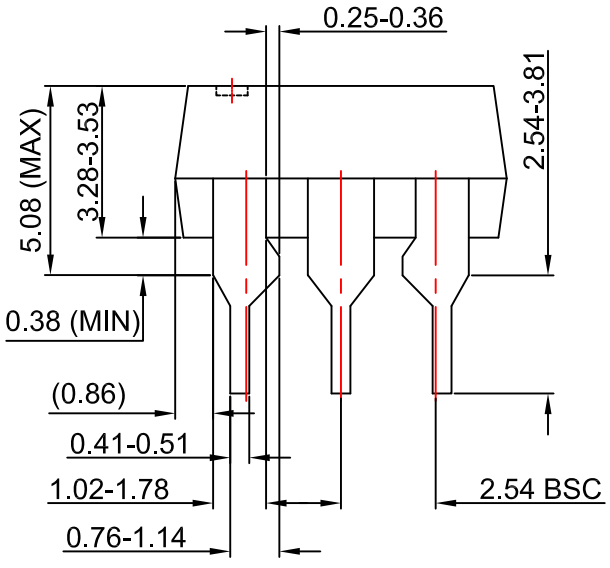

NOTES:

A) NO STANDARD APPLIES TO THIS PACKAGE.

B) ALL DIMENSIONS ARE IN MILLIMETERS.

C) DIMENSIONS ARE EXCLUSIVE OF BURRS, MOLD FLASH, AND TIE BAR EXTRUSION

D) DRAWING FILENAME AND REVSION: MKT-N06Drev4

FAIRCHILD

TRADEMARKS

The following includes registered and unregistered trademarks and service marks, owned by Fairchild Semiconductor and/or its global subsidiaries, and is not intended to be an exhaustive list of all such trademarks.

AccuPower™
AttitudeEngine™
Awinda®
AX-CAP®*
BitSiC™
Build it Now™
CorePLUS™
CorePOWER™
CROSSVOLT™
CTL™
Current Transfer Logic™
DEUXPEED®
Dual Cool™
EcoSPARK®
EfficientMax™
ESBC™
®
Fairchild®
Fairchild Semiconductor®
FACT Quiet Series™
FACT®
FAST®
FastvCore™
FETBench™
FPS™
F-PFS™
FRFET®
Global Power Resource℠
GreenBridge™
Green FPS™
Green FPS™ e-Series™
G*max*™
GTO™
IntelliMAX™
ISOPLANAR™
Making Small Speakers Sound Louder and Better™
MegaBuck™
MICROCOUPLER™
MicroFET™
MicroPak™
MicroPak2™
MillerDrive™
MotionMax™
MotionGrid®
MTi®
MTx®
MVN®
mWSaver®
OptoHiT™
OPTOLOGIC®
OPTOPLANAR®
®
PowerTrench®
PowerXS™
Programmable Active Droop™
QFET®
QS™
Quiet Series™
RapidConfigure™
™
Saving our world, 1mW/W/kW at a time™
SignalWise™
SmartMax™
SMART START™
Solutions for Your Success™
SPM®
STEALTH™
SuperFET®
SuperSOT™-3
SuperSOT™-6
SuperSOT™-8
SupreMOS®
SyncFET™
Sync-Lock™
SYSTEM GENERAL®*
TinyBoost®
TinyBuck®
TinyCalc™
TinyLogic®
TINYOPTO™
TinyPower™
TinyPWM™
TinyWire™
TranSiC™
TriFault Detect™
TRUECURRENT®*
µSerDes™
SerDes™
UHC®
Ultra FRFET™
UniFET™
VCX™
VisualMax™
VoltagePlus™
XS™
Xsens™
仙童™

* Trademarks of System General Corporation, used under license by Fairchild Semiconductor.

DISCLAIMER

FAIRCHILD SEMICONDUCTOR RESERVES THE RIGHT TO MAKE CHANGES WITHOUT FURTHER NOTICE TO ANY PRODUCTS HEREIN TO IMPROVE RELIABILITY, FUNCTION, OR DESIGN. TO OBTAIN THE LATEST, MOST UP-TO-DATE DATASHEET AND PRODUCT INFORMATION, VISIT OUR WEBSITE AT HTTP://WWW.FAIRCHILDSEMI.COM. FAIRCHILD DOES NOT ASSUME ANY LIABILITY ARISING OUT OF THE APPLICATION OR USE OF ANY PRODUCT OR CIRCUIT DESCRIBED HEREIN; NEITHER DOES IT CONVEY ANY LICENSE UNDER ITS PATENT RIGHTS, NOR THE RIGHTS OF OTHERS. THESE SPECIFICATIONS DO NOT EXPAND THE TERMS OF FAIRCHILD'S WORLDWIDE TERMS AND CONDITIONS, SPECIFICALLY THE WARRANTY THEREIN, WHICH COVERS THESE PRODUCTS.

LIFE SUPPORT POLICY

FAIRCHILD'S PRODUCTS ARE NOT AUTHORIZED FOR USE AS CRITICAL COMPONENTS IN LIFE SUPPORT DEVICES OR SYSTEMS WITHOUT THE EXPRESS WRITTEN APPROVAL OF FAIRCHILD SEMICONDUCTOR CORPORATION.

As used herein:

1. Life support devices or systems are devices or systems which, (a) are intended for surgical implant into the body or (b) support or sustain life, and (c) whose failure to perform when properly used in accordance with instructions for use provided in the labeling, can be reasonably expected to result in a significant injury of the user.
2. A critical component in any component of a life support, device, or system whose failure to perform can be reasonably expected to cause the failure of the life support device or system, or to affect its safety or effectiveness.

ANTI-COUNTERFEITING POLICY

Fairchild Semiconductor Corporation's Anti-Counterfeiting Policy. Fairchild's Anti-Counterfeiting Policy is also stated on our external website, www.fairchildsemi.com, under Sales Support.

Counterfeiting of semiconductor parts is a growing problem in the industry. All manufacturers of semiconductor products are experiencing counterfeiting of their parts. Customers who inadvertently purchase counterfeit parts experience many problems such as loss of brand reputation, substandard performance, failed applications, and increased cost of production and manufacturing delays. Fairchild is taking strong measures to protect ourselves and our customers from the proliferation of counterfeit parts. Fairchild strongly encourages customers to purchase Fairchild parts either directly from Fairchild or from Authorized Fairchild Distributors who are listed by country on our web page cited above. Products customers buy either from Fairchild directly or from Authorized Fairchild Distributors are genuine parts, have full traceability, meet Fairchild's quality standards for handling and storage and provide access to Fairchild's full range of up-to-date technical and product information. Fairchild and our Authorized Distributors will stand behind all warranties and will appropriately address any warranty issues that may arise. Fairchild will not provide any warranty coverage or other assistance for parts bought from Unauthorized Sources. Fairchild is committed to combat this global problem and encourage our customers to do their part in stopping this practice by buying direct or from authorized distributors.

PRODUCT STATUS DEFINITIONS

Definition of Terms

Datasheet Identification	Product Status	Definition
Advance Information	Formative / In Design	Datasheet contains the design specifications for product development. Specifications may change in any manner without notice.
Preliminary	First Production	Datasheet contains preliminary data; supplementary data will be published at a later date. Fairchild Semiconductor reserves the right to make changes at any time without notice to improve design.
No Identification Needed	Full Production	Datasheet contains final specifications. Fairchild Semiconductor reserves the right to make changes at any time without notice to improve the design.
Obsolete	Not In Production	Datasheet contains specifications on a product that is discontinued by Fairchild Semiconductor. The datasheet is for reference information only.

Rev. I73

© Fairchild Semiconductor Corporation