MFA/COMO DRILLS

BEVEL GEARBOX. PART NO. 919D24

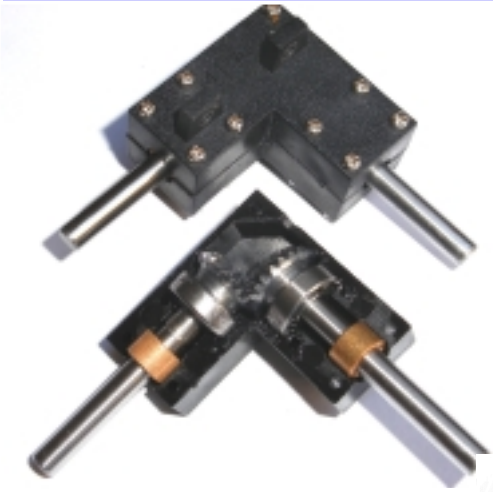

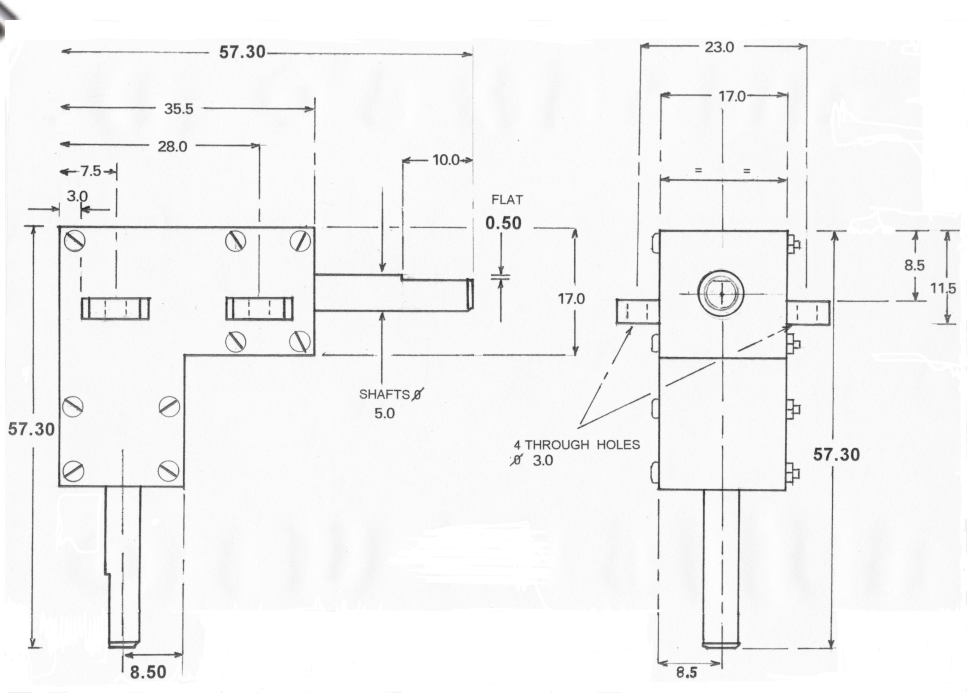

BEVEL GEARBOX

This unit has steel gears and shafts running in ballraces and scintered bronze bearings, 1 ball race and sintered bearing per shaft. The former act also as thrust races protecting the bevel gears from external pressures of varying loads. The housing mouldings are 30% glass filled nylon for strength and have four pre-drilled mounting holes. Key flats are provided on both shafts.

*** 1:1 gear ratio ***
*** Lubricated for life ***
*** Designed for rugged service life ***

Specification		Material	
Weight:	42g	Case:	30% glass filled nylon
Backlash:	1 deg approx	Gear:	Mild steel: BS970:part 3:1991:230MO7

Max input speed: 5000 r.p.m.
Rated tolerance torque: 7.5 Kg-cm
Max momentary tolerance torque: 22.5 Kg-cm

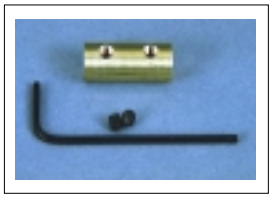

IN-LINE COUPLINGS:	**5 - 5mm**	**Pt No. 919D1/5**
	5 - 6mm	**Pt No. 919D1/3**

MFA/COMO DRILLS FELDERLAND LANE. WORTH. DEAL. KENT. CT14 OBT
TEL: 01304 612132. FAX: 01304 614696
E-MAIL: info@mfacomo.com www.mfacomodrills.com

THE ABOVE FIGURES ARE A GUIDE ONLY AND DO NOT FORM ANY CONTRACTUAL OBLIGATION ON THE PART OF MFA/COMO DRILLS.