This document was generated on 04/26/2017

PLEASE CHECK WWW.MOLEX.COM FOR LATEST PART INFORMATION

Part Number: 0395443005
Status: Active
Overview: Eurostyle™ Terminal Blocks
Description: 5.08mm Pitch Eurostyle™ Vertical Fixed Mount PCB Terminal Block, 5 Circuits

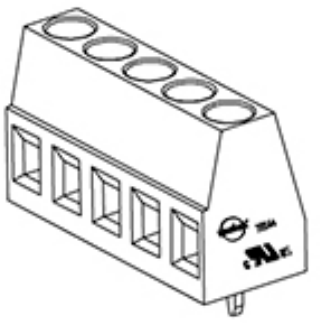

Series image - Reference only

Documents:
3D Model
Drawing (PDF)
RoHS Certificate of Compliance (PDF)

Agency Certification

UL	E48521

General

Product Family	Terminal Blocks
Series	39544
Application	N/A
Component Type	One Piece
MolexKits	Yes
Overview	Eurostyle™ Terminal Blocks
Product Name	ESE, Eurostyle™ Fixed Mount
Type	Euro Block
UPC	822350547031

Physical

Circuits (Loaded)	5
Entry Angle	Horizontal
Lock to Mating Part	None
Number of Rows	1
Orientation	Vertical
PC Tail Length	3.00mm
PCB Thickness - Recommended	2.00mm
Panel Mount	No
Pitch - Mating Interface	5.08mm
Pitch - Termination Interface	5.08mm
Polarized to Mating Part	N/A
Stackable	No
Temperature Range - Operating	-40°C to +105°C
Wire Size AWG	12, 14, 16, 18, 20, 22
Wire Size mm²	0.33-3.31

Electrical

Current - Maximum per Contact	15.0A
Voltage - Maximum	300V

Solder Process Data

Duration at Max. Process Temperature (seconds)	005
Lead-freeProcess Capability	WAVE
Max. Cycles at Max. Process Temperature	135
Process Temperature max. C	260

Material Info

Reference - Drawing Numbers

Sales Drawing	SD-39544-001

EU ELV
Not Relevant

EU RoHS **China RoHS**
Compliant
REACH SVHC
Not Contained Per - ED/21/2016 (20 June 2016)
Halogen-Free Status
Low-Halogen

Need more information on product environmental compliance?

Email productcompliance@molex.com
Please visit the Contact Us section for any non-product compliance questions.

China ROHS	Green Image
ELV	Not Relevant
RoHS Phthalates	Not Contained

Search Parts in this Series
39544 Series

This document was generated on 04/26/2017

PLEASE CHECK WWW.MOLEX.COM FOR LATEST PART INFORMATION