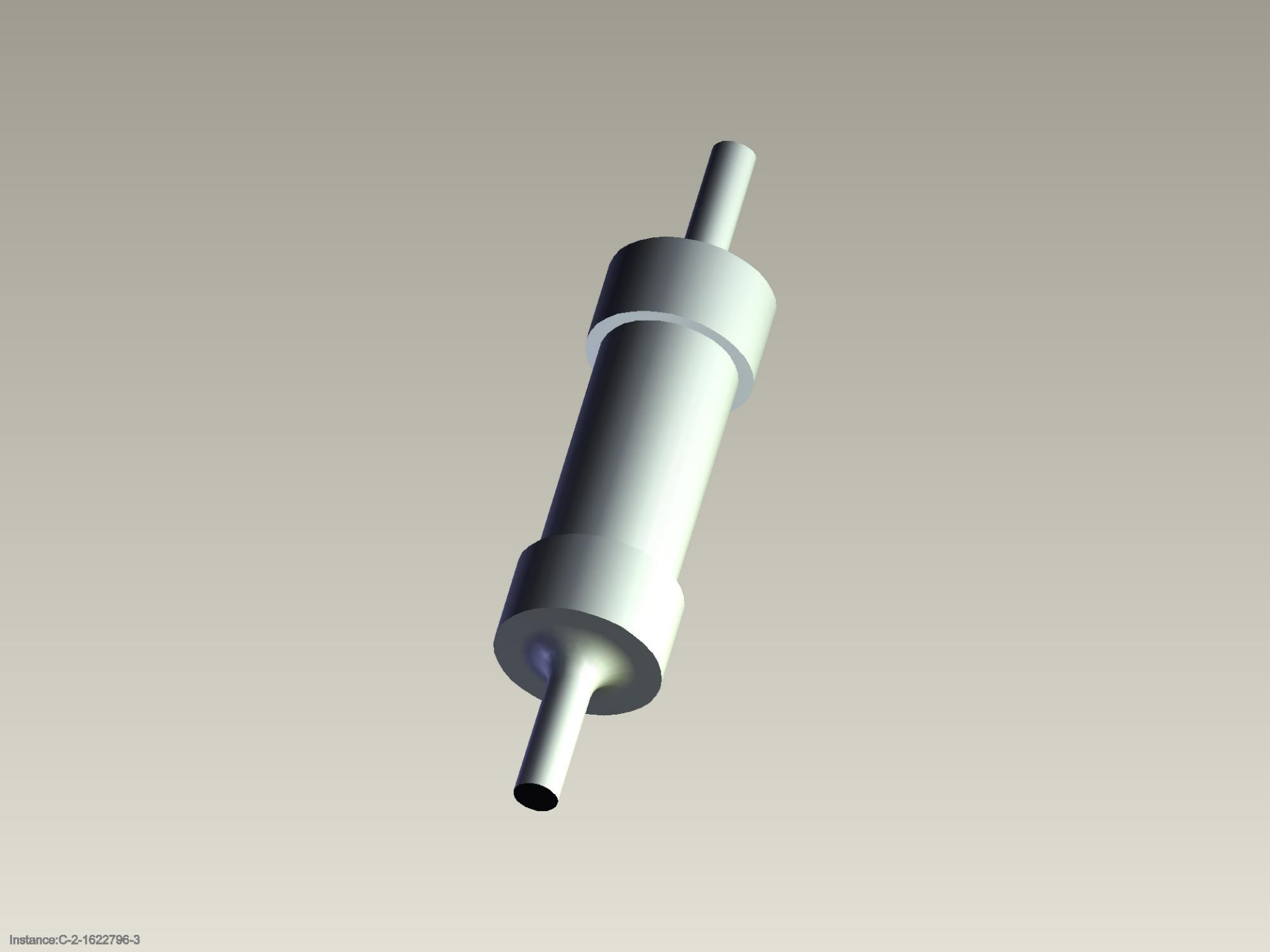

Instance:C-2-1622796-3