PRODUCT OVERVIEW

PrimEvo Emergency Lighting
for optimised productivity and reliability

PrimEvo XT100E

Productivity & reliability

PrimEvo XT100E

- **Global availability**
  Available at your local wholesaler
- **Easy to install**
  Plug and play, maintained and non-maintained in one
- **Unique 3 year warranty**
- **Affordable range**
  Full LED range with best price/performance ratio

Luminaire

Order Code	Input voltage	Description	Lamp type	Power consumption (VA/W)	Operation duration (hrs)	Environment temperature (°C)	Weight (kg)	Configurable pictograms included
7TCA091160R0499	220 - 240 Vac, 50 Hz	XT100E	2 x 0.5W LED*	5/2	3	0 - +40	0.6	

* = 1W LED

Spacing table

Mounting height (m)					
2.00	2.97	7.80	8.14	8.61	3.33
2.50	3.09	8.38	8.72	9.18	3.32
3.00	3.22	8.78	8.96	9.42	3.33
3.50	3.15	9.03	9.16	9.47	3.15
4.00	3.01	9.16	9.25	9.50	3.01

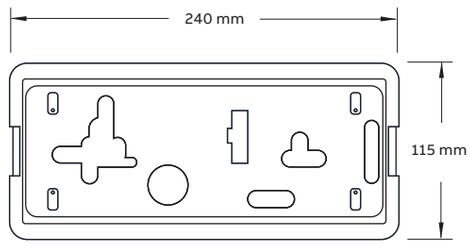

PrimEvo XT200E

Productivity & reliability

PrimEvo XT200E

- **Global availability**
  Available at your local wholesaler
- **Easy to install**
  Plug and play, maintained and non-maintained in one
- **Unique 3 year warranty**
- **Affordable range**
  Full LED range with best price/performance ratio

Luminaire

Order Code	Input voltage	Description	Lamp type	Power consumption (VA/W)	Operation duration (hrs)	Environment temperature (°C)	Weight (kg)	Configurable pictograms included
7TCA091720R0090	220 - 240 Vac, 50	XT200E	14 x 0.125W LED	5.2/2.4	3	-5 - +45	0.95	

* = 1.75W LED

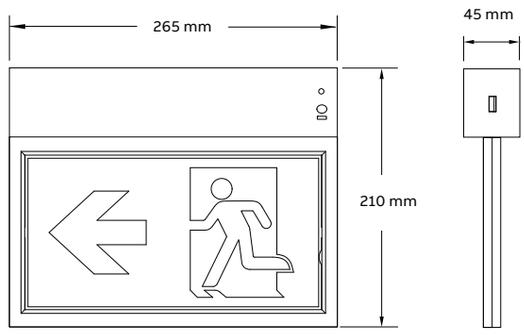

PrimEvo RS100E & SM100E

Productivity & reliability

RS100E

SM100E

PrimEvo RS100E & SM100E

- **Global availability**
  Available at your local wholesaler
- **Easy to install**
  Plug and play, maintained and non-maintained in one
- **Unique 3 year warranty**
- **Affordable range**
  Full LED range with best price/performance ratio

Luminaire

Order Code	Input voltage	Description	Lamp type	Power consumption** (VA/W)	Operation duration (hrs)	Environment temperature (°C)	Weight (kg)
7TCA091720R0091	220 - 240 Vac, 50 Hz	RS100E	2 x 1.5W LED*	10/4.8	3	0 - +25	0.425
7TCA091720R0092	220 - 240 Vac, 50 Hz	SM100E	2 x 1.5W LED*	9/4.5	3	0 - +25	0.425

* = 3W LED
** maintained mode

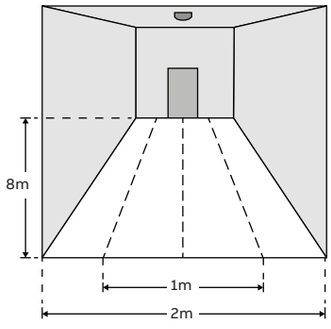

PrimEvo RS100E

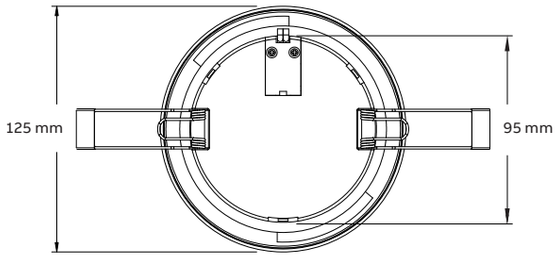

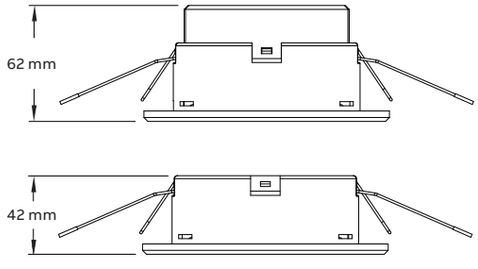

PrimEvo SM100E

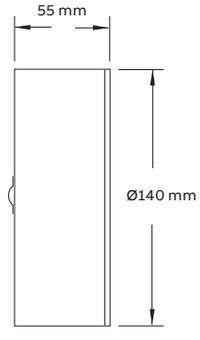

—
ABB Ltd
Electrification Products
Tower Court
Courtaulds Way
Foleshill Enterprise Park
Coventry
West Midlands
CV6 5NX
Sales Tel: +44 (0) 333 999 9900
Sales Fax: +44 (0) 333 999 9901
E-Mail: lv.enquiries@gb.abb.com

www.abb.com

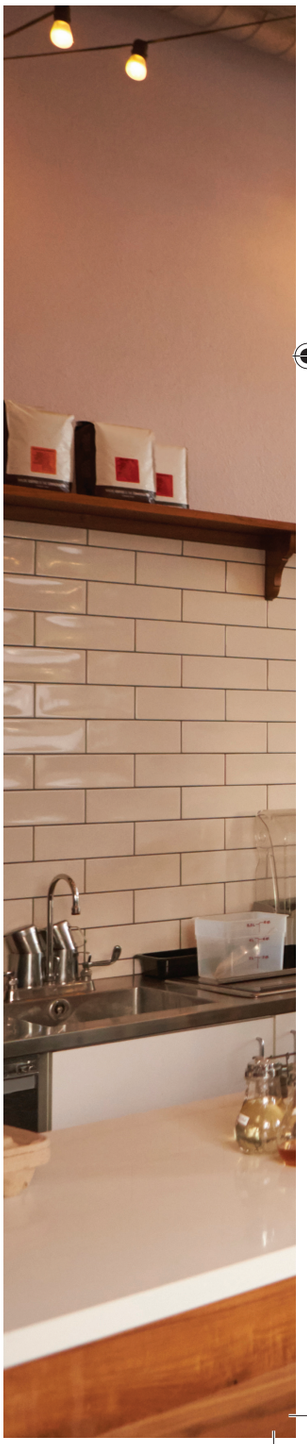

9AKK106930A8304 REV A 05.04.2017

© Copyright 2017 ABB. All rights reserved.
Specifications subject to change without notice.