PRELIMINARY VERSION NOVEMBER 2017

UNIPOLE & MULTIPOLE CONNECTORS



LEMO®

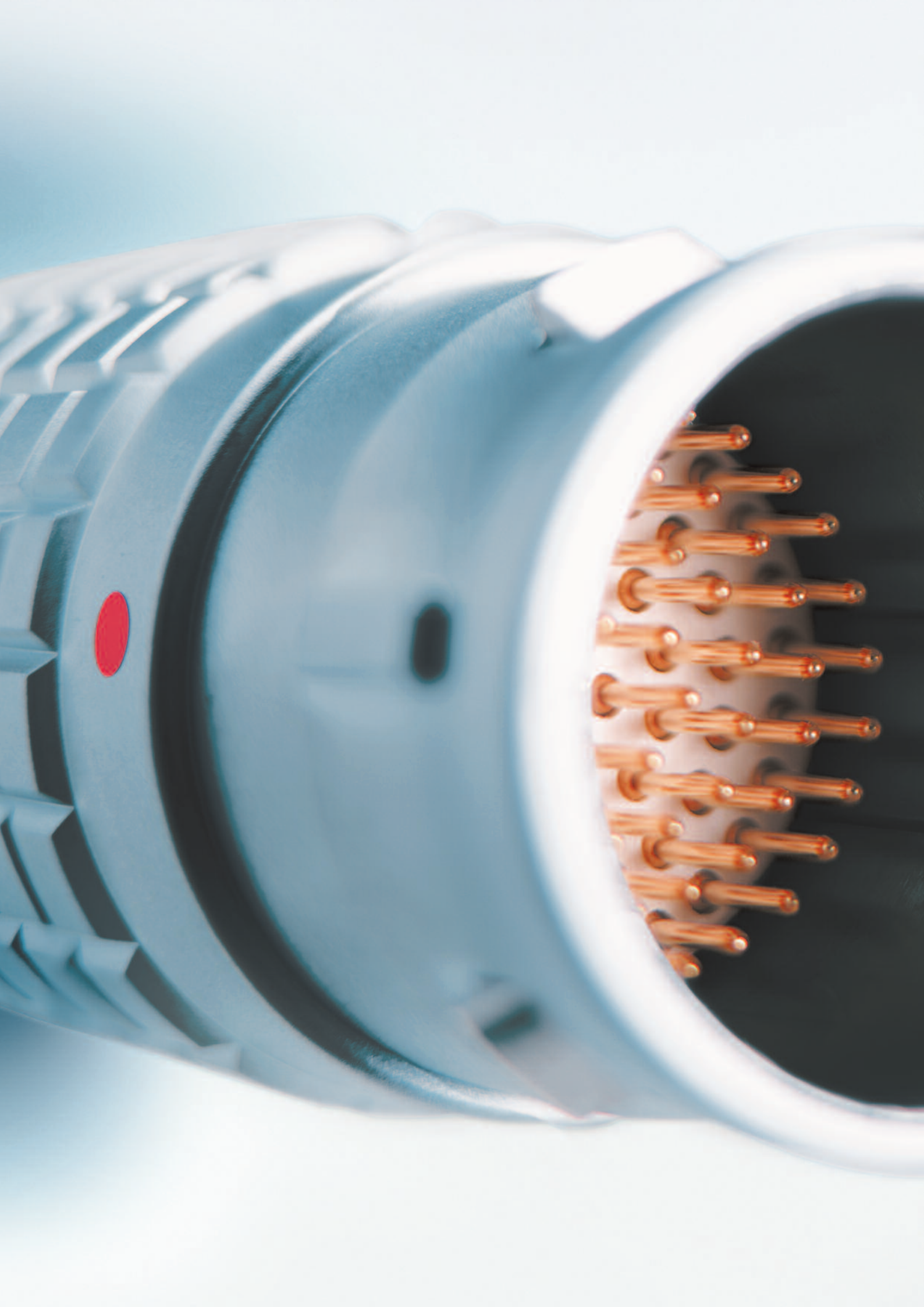

LEMO unipole and multipole connectors

This catalogue gives the complete description of LEMO unipole and multipole type connectors. The LEMO manufacturing programme has been extended to almost 40 series divided into 7 product families with specific mating and environmental characteristics. Each series includes a wide variety of plug, socket, coupler and bridge plug models, available in contact configurations adapted to all round cables, including up to 114 conductors, and a maximum diameter of 30 mm.
Watertight and vacuumtight models are also available. Since LEMO connectors are perfectly screened and designed to guarantee very low resistance to shell electrical continuity, they are particularly adapted to applications where electro-magnetic compatibility (EMC) is important.

Table of Contents

3 steps to select the right connector ... 3

B Series (indoor, keyed)
- Part Numbering system ... 13
- Metal Housing models ... 14
- Elbow socket models ... 25
- Plastic housing models ... 28
- Watertight or vacuumtight models ... 30
- Bridge models ... 34
- Threaded-latching models ... 35
- Alignment Key and Polarized Keying System ... 36

K Series (outdoor, keyed)
- Part Numbering system ... 38
- Metal Housing models ... 39
- Watertight or vacuumtight models ... 47
- Alignment Key and Polarized Keying System ... 49

T Series (outdoor, keyed)
- Part Numbering system ... 52
- Chrome-plated Housing models ... 53
- Watertight or vacuumtight models ... 55
- Plastic housing models, alignment Key and Polarized Keying System ... 56

B, K and T Series Insert configuration, Housings, Insulators, Contacts, Collets, Variant ... 57

S Series (indoor, stepped insert)
- Part Numbering system ... 75
- Metal Housing models ... 76
- Elbow socket models ... 87
- Plastic housing models ... 89
- Watertight or vacuumtight models ... 91

E Series (outdoor, stepped insert)
- Part Numbering system ... 94
- Metal Housing models ... 95
- Watertight or vacuumtight models ... 101

L Series (outdoor, stepped insert)
- Part Numbering system ... 104
- Metal Housing models ... 105
- Watertight or vacuumtight models ... 109
- Alignment Key and Polarized Keying System ... 109

S, E and L Series Insert configuration, Housings, Insulators, Contacts, Collets, Variant ... 111

2G Series (indoor, keyed) ... 134

2C Series (indoor, stepped insert) ... 141

M Series (outdoor, keyed) ... 149

F Series (outdoor, keyed) ... 150

Spare parts ... 152

Accessories ... 160

Tooling ... 173

Panel cut-outs and PCB drilling pattern ... 179

Cable assembly (B, K, T, S and E series) ... 191

Technical characteristics ... 205

Precision modular connectors to suit your application

Since it's creation in Switzerland in 1946 the LEMO Group has been recognized as a global leader of circular Push-Pull connectors and connector solutions. Today LEMO and its affiliated companies, REDEL and COELVER, are active in more than 80 countries with the help of over 40 subsidiaries and distributors.

Over 75'000 connectors

The modular design of the LEMO range provides over 75'000 connectors from miniature ø 3 mm to ø 50 mm, capable of handling cable diameters up to 30 mm and for up to 114 contacts.

This vast portfolio enables you to select the ideal connector configuration to suit almost any specific requirement in most markets, including medical devices, test and measurement instruments, machinery, audio video broadcast, telecommunications and military.

LEMO's Push-Pull Self-Latching Connection System

This self-latching system is renowned worldwide for its easy and quick mating and unmating features. It provides absolute security against vibration, shock or pull on the cable, and facilitates operation in a very limited space.

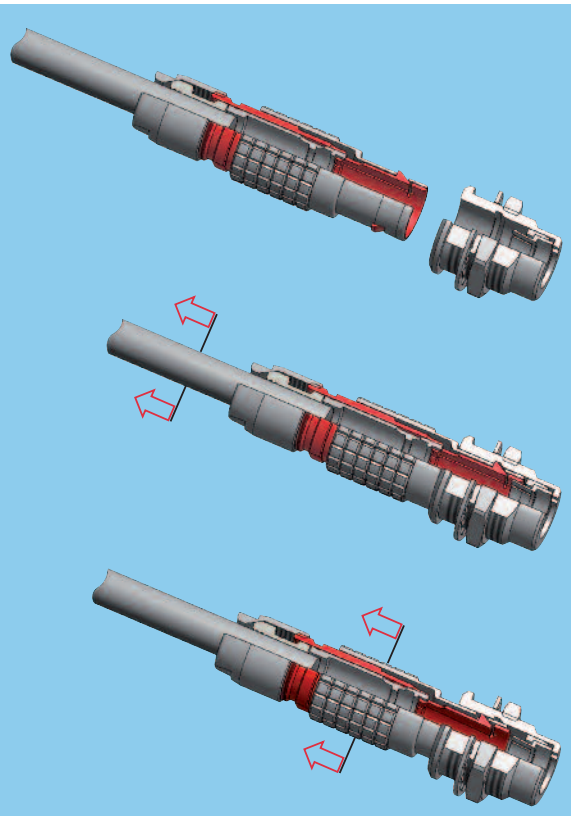

The LEMO self-latching system allows the connector to be mated by simply pushing the plug axially into the socket.

Once firmly latched, connection cannot be broken by pulling on the cable or any other component part other than the outer release sleeve.

When required, the connector is disengaged by a single axial pull on the outer release sleeve.
This first disengages the latches and then withdraws the plug from the socket.

UL Recognition

LEMO connectors are recognized by the Underwriters Laboratories (UL). The approval of the complete system (LEMO connector, cable and your equipment) will be easier because LEMO connectors are recognized.

CE marking

CE marking means that the appliance or equipment bearing it complies with the protection requirements of one or several European safety directives. CE marking applies to complete products or equipment, **but not to electromechanical components, such as connectors**.

RoHS

LEMO connector specifications conforms the requirements of the RoHS directive (2011/65/EU) of the European Parliament and the latest amendments. This directive specifies the restrictions of the use of hazardous substances in electrical and electronic equipment marketed in Europe.

3 steps to select the right connector

Step 1: Select connector series

Select the appropriate LEMO connector series according to the environmental parameters that will affect your device or cable such as indoor, outdoor, temperature range, ingress protection of the mated connector and of your device. Use the table shown on page 4.

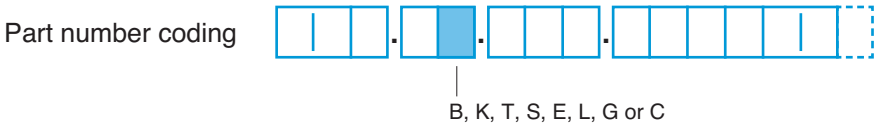

Step 2: Select connector size

Use the section (mm²) or the AWG of your cable wire to select the optimal contact diameter (values vary between solder, crimp or print contact), see page 8.

Use this optimal contact diameter to determine the right connector size as well as the insert configuration, see page 6.

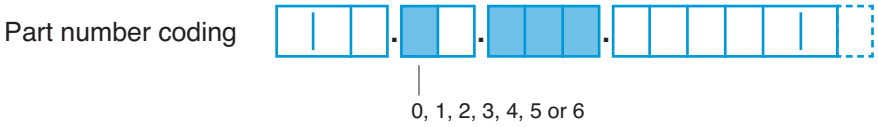

Step 3: Complete the part number

Now that you know the series, as well as the insulator configuration, complete the part numbering system with the help of the following table.

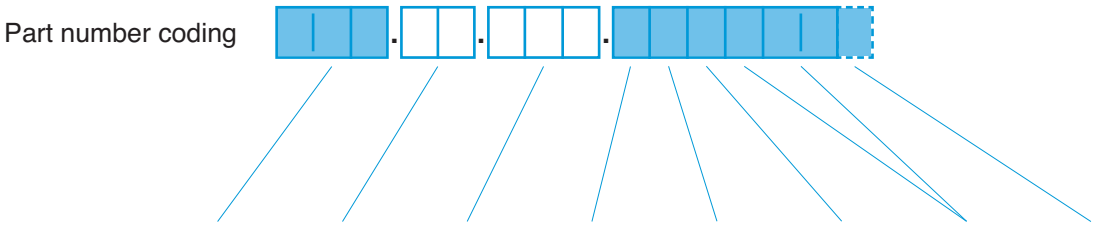

	Model	Series	Insert configuration	Housing material	Insulator material	Contact	Collet	Variant
B Series (indoor, keyed)	14	14	57	64	64	64	67	71
K Series (outdoor, keyed)	39	39	57	64	64	64	68	71
T Series (outdoor, keyed)	53	53	57	64	64	64	70	71
S Series (indoor, stepped insert)	76	76	111	120	120	120	123	130
E Series (outdoor, stepped insert)	95	95	111	120	120	120	127	130
L Series (outdoor, keyed, stepped insert)	105	105	111	120	120	120	129	130
G Series (indoor, keyed)	135	135	137	137	134	137	138	138
C Series (indoor, stepped insert)	142	142	145	146	141	146	146	147

Note: Figures in the above table refer to the catalogue pages.

Step 1: Select Connector Series

LEMO unipole and multipole connectors

The standard keyed Series (B, 00, G)
The characteristic feature of these connector series is a keying system which allows higher contact density and prevents all errors in alignment. The various keying alternatives prevent unwanted cross mating of otherwise similar connectors. It is also possible to use crimp contacts to reduce cable assembly time. These connector series, include the 0B to 5B range as well as the 00 multipole and 2G (shortened version of the 2B series), some vacuumtight models are also available.

The watertight keyed Series (K, T, L)
These series are watertight when mated and assembled to an appropriate cable. They include the 0K to 5K series, the TT to 3T series, available in the same types as the 0B to 5B series, the 0L to 2L series with keying and hermaphroditic insulator.

The standard Series (S, 00, C)
The characteristic feature of these connector series is the hermaphroditic insulator in the multipole version. They include principally the 0S to 6S series, as well as the 00 unipole series and the 2C (shortened version).

The watertight Series (E)
These series are watertight when mated and assembled to an appropriate cable. They include the 0E to 6E series and are available in the same types as the S series.

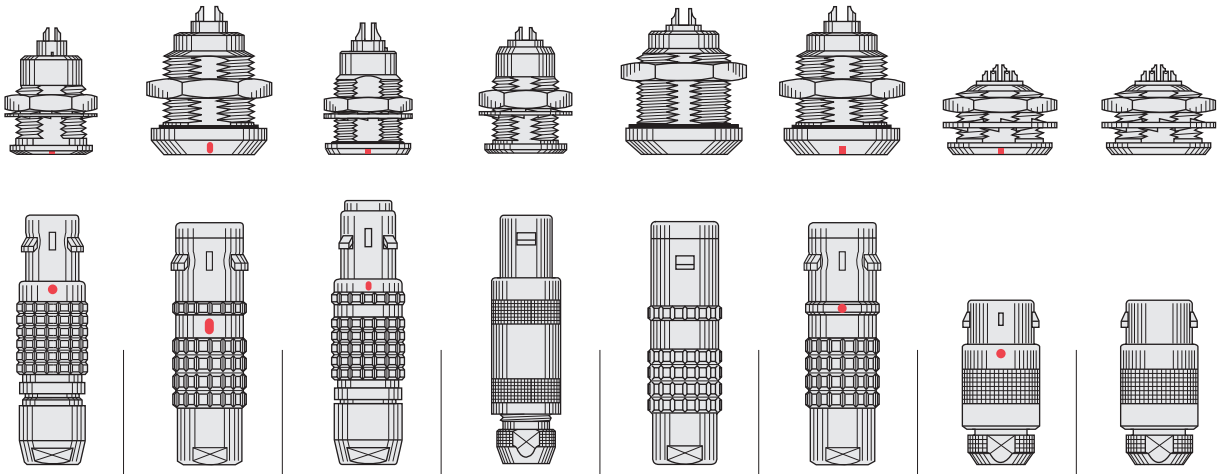

Series	00 multipole B	K	T	00 unipole S	E	L	G	C
Environment	indoor	outdoor or harsh environment		indoor	outdoor or harsh environment		indoor	
Ingress [1] protection	IP50	IP66 to IP68		IP50	IP66 to IP68		IP50	
Ingress [2] protection	IP50 to IP68 vacuumtight	IP66 to IP68 vacuumtight		IP50 to IP68 vacuumtight	IP66 to IP68 vacuumtight		IP50	IP50 to IP68 vacuumtight
Temperature range	- 55 to 250°C	- 55 to 200°C		- 55 to 250°C	- 55 to 200°C		- 55 to 250°C	
Latching	Push-Pull self-latching							
Shell sizes	8 metal and 4 plastic	6 metal	5 metal	7 metal and 5 plastic	6 metal		3 metal	4 metal
Insulator type	Multipole			Unipole or multipole hermaphroditic		Multipole hermaphroditic	Multipole	Multipole hermaphroditic
Contact type	Solder, crimp or print			Solder, crimp or print		Solder, crimp or print	Solder or print	
Features	13 keyways	9 keyways	4 keyways	Stepped insert		Stepped insert	1 keyway	Stepped insert
Page	11 to 36	37 to 50	51 to 56	73 to 92	93 to 102	103 to 110	133 to 140	141 to 144

Note: [1] Mated connector. See ingress protection code p. 5. [2] Your device. For selection of connectors for watertight and vacuumtight devices, see p. 5.

Definition of Ingress Protection (IP code)

IEC 60529 outlines an international classification system for the sealing effectiveness of enclosures of electrical equipment against the intrusion into the equipment of foreign bodies (i.e. tools, dust, fingers) and moisture. This classification system utilizes the letters «IP» (Ingress Protection) followed by two digits.

Example: IP 50 = IP 5 0

IP letter code
1st digit
2nd digit

Degrees of protection - First digit

The first digit of the IP code indicates the degree to which persons are protected against contact with moving parts and the degree that equipment is protected against solid foreign bodies intruding into an enclosure.

Code	First digit description
0	No special protection
1	Protection from a large part of the body such as hand or from solid objects greater than 50 mm in diameter
2	Protection against objects not greater than 80 mm in length and 12 mm in diameter
3	Protection from entry by tools, wires, etc., with a diameter or thickness greater than 2.5 mm
4	Protection from entry by solid objects with a diameter or thickness greater than 1.0 mm
5	Protection from the amount of dust that would interfere with the operation of the equipment
6	Dust-tight
7	–
8	–

Degrees of protection - Second digit

The second digit indicates the degree of protection of the equipment inside the enclosure against the harmful entry of various forms of moisture (e.g. dripping, spraying, submersion, etc.)

Code	Second digit description
0	No special protection
1	Protection from vertically dripping water
2	Protection from dripping water when tilted up to 15°
3	Protection from sprayed water
4	Protection from splashed water
5	Protection from water projected from a nozzle
6	Protection against heavy seas, or powerful jets of water
7	Protection against temporary immersion
8	Protection against complete continuous submersion in water

Selection of connectors for watertight or vacuumtight devices

LEMO B and S series are rated IP50 only when mated. LEMO E, K, T and L series are rated IP66 (and over) only when mated. If a device must be watertight or vacuumtight when the connectors are unmated, it is important to select a watertight or vacuumtight socket. You can consider the following two situations:

A) Figure 1 shows a typical outdoor device. To ensure this device retains IP66 or above when connectors are unmated, it is important to choose a watertight socket from B, S, E, K, T or L series.

B) Figure 2 shows a device which is subjected to pressure difference such as a near vacuum or pressurized gas and must exhibit no leakage. To ensure the device maintains its sealing, the socket is additionally tested for helium leakage (according MIL 1344A).

Fig. 1

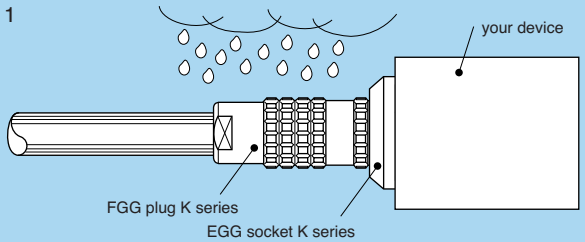

Fig. 2

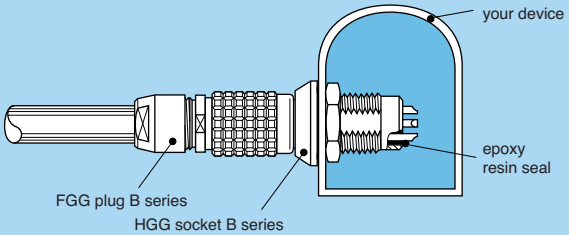

Check temperature range (see section on pages 30, 47, 55, 91, 101 and 109).

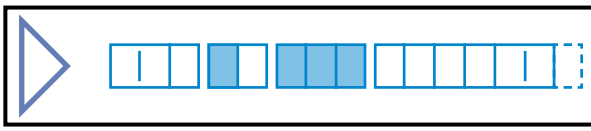

Step 2: Select Connector Size

Select the right connector size and insert configuration

To be able to select the right connector size (0 to 6), it is important to define the contact diameter (ø A).
Find out the available contact diameter (ø A) of the LEMO connector depending on the number of contacts required and depending on the rating required (see pages 57 to 63 and 111 to 119).
The following table shows the contact diameter (ø A), or the solder pot diameter (ø C) for the 1D series.

	Number of contacts	Insert configuration	Series																	
			00-TT	0B-0K-0T	1B-1K-1T	XB	2B-2K-2T	3B-3K-3T	4B-4K	5B-5K	00	0S-0E-0L [1]	1S-1E-1L [1]	2S-2E-2L [1]	3S-3E	4S-4E	5S-5E	6S-6E	2G	2C
Unipole	1	113									1.3									
	1	116										1.6								
	1	120											2.0							
	1	130											3.0	3.0						
	1	140												4.0	4.0	4.0				
	1	160													6.0	6.0				
	1	112															12.0			
Multipole	2	302	0.5	0.9	1.3		2.0	3.0		6.0		0.9	1.3	1.6	2.0	4.0	6.0			1.6
	3	303	0.5	0.9	1.3		1.6	2.0				0.7	0.9	1.3	2.0	3.0	6.0/4.0	6.0		1.3
	4	304	0.5	0.7	0.9		1.3	2.0	3.0	4.0		0.7	0.9	1.3	2.0	3.0	4.0	8.0		1.3
	5	305	0.35	0.7	0.9		1.3	1.6					0.9/0.7	1.3	2.0/1.3	3.0/2.0	4.0/3.0			
	6	306	0.35	0.5	0.7		1.3	1.6	2.0				0.7	1.3	1.3	2.0	3.0			1.3
	7	307		0.5	0.7		1.3	1.6	2.0					1.3/0.9	1.3	2.0/1.3				
	8	308			0.7		0.9	1.3						0.9	1.3	1.3	3.0			0.7
	9	309		0.5				1.3/2.0								1.3				
	10	310			0.5		0.9	1.3	1.6	3.0				0.9	1.3	1.3	2.0			0.7
	12	312		0.35		0.7	0.7	0.9	1.3						0.9	1.3	2.0	4.0/5.0		0.7
	13	313													0.9	1.3				
	14	314			0.5		0.7	0.9		2.0					0.9	1.3	3.0/2.0			0.7
	16	316			0.5		0.7	0.9	0.9	2.0					0.9	0.9	2.0	3.0		
	18	318					0.7	0.9							0.9	0.9	3.0/1.6	4.0	0.7	
	19	319					0.7													
	20	320						0.7	0.9	1.6						0.9	1.6	3.0		
	22	322				0.5		0.7								0.9	3.0/1.6			
	24	324						0.7	0.9								0.9	1.6	3.0	
	26	326					0.5	0.7												

Note: [1] L series not available in unipole version. [2] 2.0 is for 6S series, for 6E the values are 1.3 and 5.0.

	Number of contacts	Insert configuration	Series																
										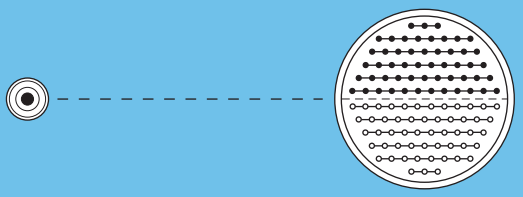									
			00-TT	0B-0K-0T	1B-1K-1T	XB	2B-2K-2T	3B-3K-3T	4B-4K	5B-5K	00	0S-0E-0L [1]	1S-1E-1L [1]	2S-2E-2L [1]	3S-3E	4S-4E	5S-5E	6S-6E	2G	2C
Multipole	30	**330**						0.7	0.9	1.3							1.3	2.0		
	32	**332**					0.5											2.0		
	36	**336**															1.3	2.0 [2]		
	40	**340**							0.7	1.3							1.3	2.0		
	44	**344**															1.3			
	48	**348**							0.7	1.3							1.3	2.0		
	50	**350**								0.9										
	54	**354**								0.9										
	60	**360**																1.6		
	62	**362**																1.6		
	64	**364**								0.9								1.3		
	72	**372**																1.3		
	106	**106**																0.9		

Note: [1] L series not available in unipole version. [2] 2.0 is for 6S series, for 6E the values are 1.3 and 5.0.

Verify the fitting to your wire

Verify if the selected contact diameter (ø A) of the LEMO connector fits to your cable wire diameter (AWG number or max. available section).

Contact type	Contact			Conductor						F_r [1] (N)	Notes
				Solid		Stranded					
						AWG		Section (mm²)			
	ø A (mm)	ø C (mm)	Form per fig.	AWG max.	Section max. (mm²)	min.	max.	min.	max.		
Solder	0.35	0.40	–	28	0.09	–	30	–	0.05	–	
	0.5[2]	0.40[2]	–	28	0.09	–	30	–	0.05	–	
	0.5	0.45[7]	–	28	0.09	–	28	–	0.09	–	
	0.7[3]	0.60[3]	–	24	0.25	–	26	–	0.14	–	
	0.7	0.80	–	22	0.34	–	22[4]	–	0.34	–	
	0.9	0.80[6]	–	22[6]	0.34[6]	–	22[4][6]	–	0.34[6]	–	
	1.3	1.00	–	20	0.50	–	20[4]	–	0.50	–	
	1.6	1.40	–	16	1.00	–	18	–	1.00	–	●
	2.0	1.80	–	14	1.50	–	16	–	1.50	–	
	3.0	2.70	–	10	4.00	–	12	–	4.00	–	
	4.0	3.70	–	10	6.00	–	10	–	6.00	–	
	5.0	5.20	–	–	–	–	8	–	10.00	–	
	6.0	5.20	–	–	–	–	8	–	10.00	–	
	8.0	7.00	–	–	–	–	4	–	21.00	–	
	12.0	11.50	–	–	–	–	0	–	50.00	–	
Crimp	0.5[5]	0.45	1	–	–	32	28	0.035	0.09	12	●
	0.7	0.80	1	–	–	26	22[4]	0.140	0.34	22	●
	0.7	0.45	2	–	–	32	28	0.035	0.09	22	○
	0.9	1.10	1	–	–	24	20	0.250	0.50	30	●
	0.9	0.80	2	–	–	26	22[4]	0.140	0.34	30	○
	0.9	0.45	2	–	–	32	28	0.035	0.09	30	○
	1.3	1.40	1	–	–	20	18	0.500	1.00	40	●
	1.3	1.10	2	–	–	24	20	0.250	0.50	40	○
	1.3	0.80	2	–	–	26	22[4]	0.140	0.34	40	○
	1.6	1.90	1	–	–	18	14[4]	1.000	1.50	50	●
	1.6	1.40	2	–	–	22	18	0.340	1.00	50	○
	2.0	2.40	1	–	–	16	12[4]	1.500	2.50	65	●
	2.0	1.90	2	–	–	18	14	1.000	1.50	65	○
	3.0	3.20	1	–	–	14	10[4]	2.500	4.00	75	●
	4.0	4.00	1	–	–	12	10	4.000	6.00	90	●

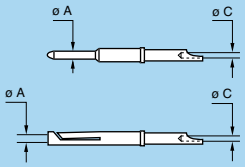

fig. 1

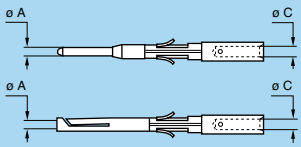

fig. 2

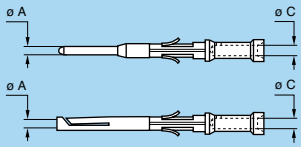

Note:
[1] contact retention force in the insulator (according to IEC 60512-8 test 15 a).
[2] for 00/TT multipole series.
[3] for S, E, 2C, 2G and 1D series.
[4] for a given AWG, the diameter of some stranded conductor designs is larger than the solder cup diameter. Make sure that the maximum conductor diameter is smaller than ø C.
[5] for 00 /TT multipole series or for 0B/0T and 1B/1T series with male contacts.
[6] for 0B.302/0B.303, 0K.302/0K.303 and 0T.302/0T.303 ø C = 1.0 mm, AWG max 20, section max (mm²) 0.50.
[7] for 00/TT and 1B/1K/1T series, according to manufacturing and plating tolerance ø C min = 0.43 mm.

● First choice alternative ○ Special order alternative

Verify the fitting to your wire

Verify if the selected contact diameter (ø A) of the LEMO connector fits to your cable wire diameter (AWG number or max. available section).

Contact type	Contact			Conductor						F_r [1] (N)	Notes
				Solid		Stranded					
	ø A (mm)	ø C (mm)	Form per fig.	AWG max.	Section max. (mm^2)	AWG min.	AWG max.	Section (mm^2) min.	Section (mm^2) max.		
Print 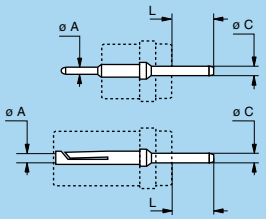	L dimensions and C are detailed in the section on PCB drilling pattern. See page 185 and 189.										●
Print (elbow) 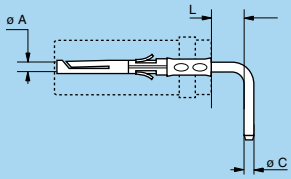	L dimensions and C are detailed in the section on PCB drilling pattern. See page 186 and 190.										●

Note: [1] contact retention force in the insulator (according to IEC 60512-8 test 15 a).

Verify the fitting to your cable

Verify if the selected connector size fits to your cable diameter.

Series	Cable diameter range (mm)			
	Collet		Collet for fitting a bend relief	
	min.	max.	min.	max.
00[1]	1.4	3.5	1.4	3.5
0B	1.4	5.6	1.4	5.2
1B	2.2	7.6	2.2	7.2
XB	4.4	8.0	4.4	7.0
2B	1.4	9.9	1.4	9.2
3B	4.2	11.9	4.2	11.0
4B	4.9	16.0	4.9	15.0
5B	9.6	25.0	9.6	15.5
0K	1.0	5.0	1.0	5.0
1K	1.3	8.5[3]	1.3	8.5[3]
2K	1.3	10.5[3]	1.3	10.5[3]
3K	2.6	15.0[3]	2.6	15.0[3]
4K	4.6	23.5[3]	4.6	15.0
5K	9.6	23.5	–	–

Series	Cable diameter range (mm)			
	Collet		Collet for fitting a bend relief	
	min.	max.	min.	max.
TT	2.4	3.0	2.4	3.0
0T	1.0	5.0	1.0	5.0
1T	1.3	6.5	1.3	6.5
2T	1.3	8.5	1.3	8.5
3T	2.6	10.5	2.6	10.5
00[2]	1.3	4.4	1.3	4.4
0S	1.3	6.2[3]	1.3	6.2[3]
1S	1.4	8.7[3]	1.4	8.7[3]
2S	1.3	10.5[3]	1.3	10.5[3]
3S	2.6	13.0[3]	2.6	13.0[3]
4S	4.1	22.0[3]	4.1	13.0
5S	6.1	30.0	–	–
6S	11.1	30.0	–	–

Series	Cable diameter range (mm)			
	Collet		Collet for fitting a bend relief	
	min.	max.	min.	max.
0E	1.0	5.0	1.0	5.0
1E	1.3	8.5[3]	1.3	8.5[3]
2E	1.3	10.5[3]	1.3	10.5[3]
3E	2.6	15.0[3]	2.6	15.0[3]
4E	4.8	23.5[3]	4.8	15.0
5E	9.6	23.5	–	–
6E	13.0	30.0	–	–
0L	1.0	5.0	1.0	5.0
1L	1.3	8.5[3]	1.3	8.5[3]
2L	1.3	10.5[3]	1.3	10.5[3]
2C	2.2	8.1	2.2	8.1
2G	4.5	7.9	4.5	7.9

Note:
[1] for multipole only.
[2] for unipole only.
[3] for these series the maximum cable diameter require models with oversized cable collet (type K).

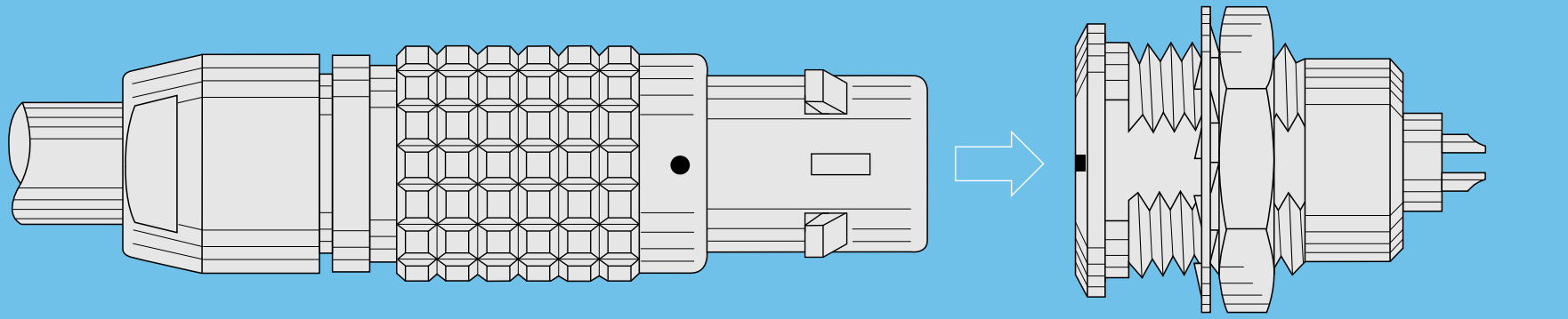

B SERIES

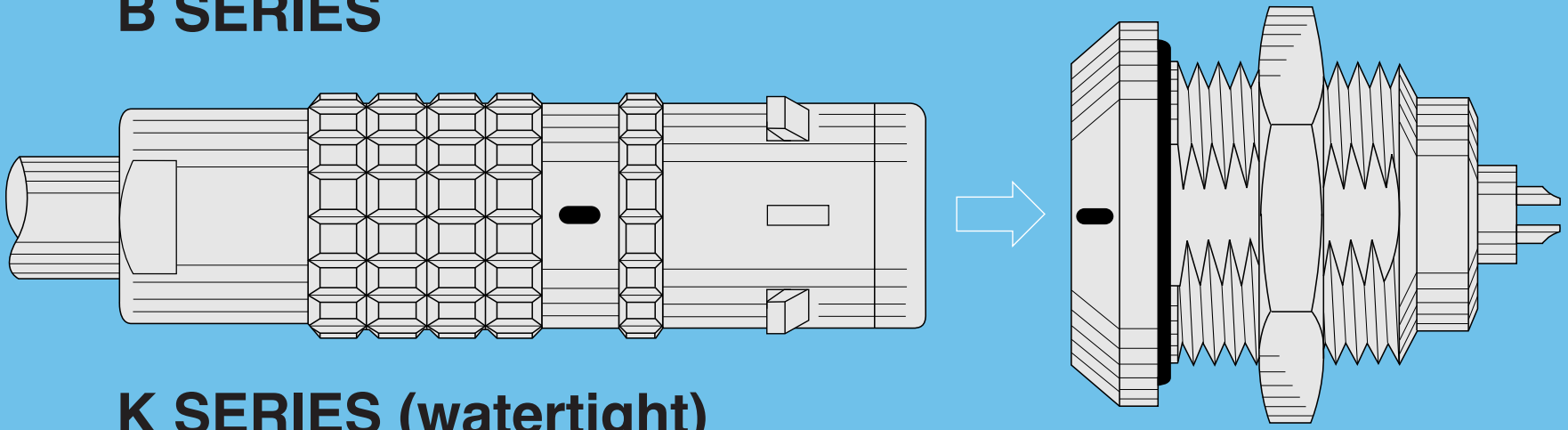

K SERIES (watertight)

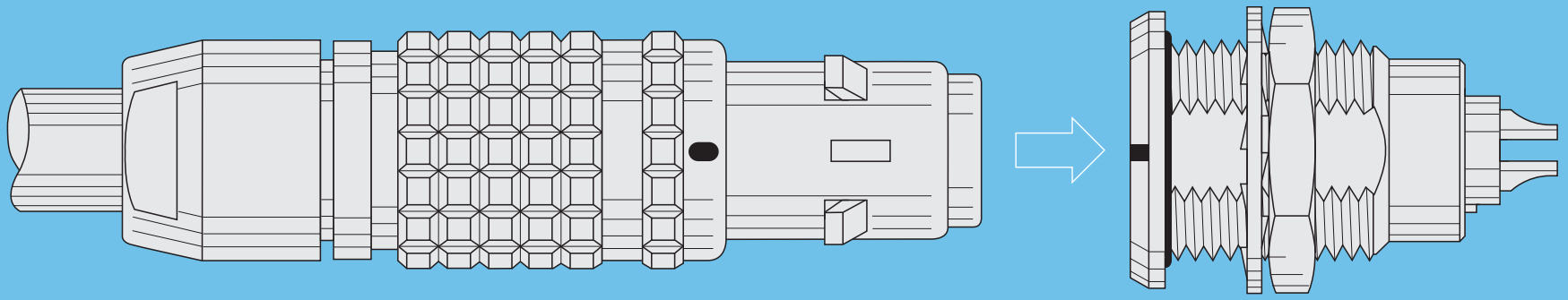

T SERIES (watertight)

B Series

B series connectors provide the following main features:
– security of the Push-Pull self-latching system
– solder, crimp or print contacts (straight or elbow)
– multiple key options to avoid cross mating of similar connectors
– 360° screening for full EMC shielding.
– multipole types 2 to 64 contacts
– high packing density for space savings
– keying system («G» key standard) for connector alignment

Metal housing models (page 14)

Fixed plugs

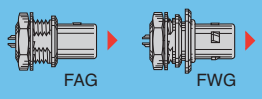

Elbow plugs

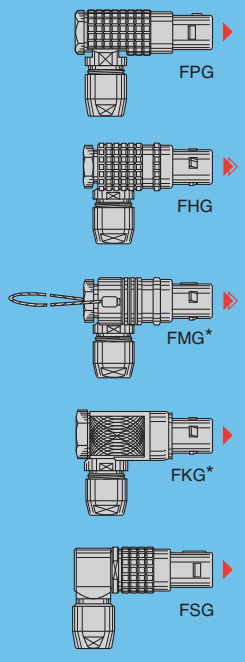

Straight plugs

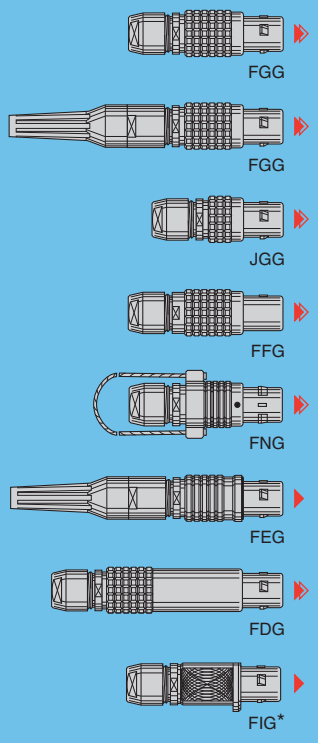

Fixed sockets

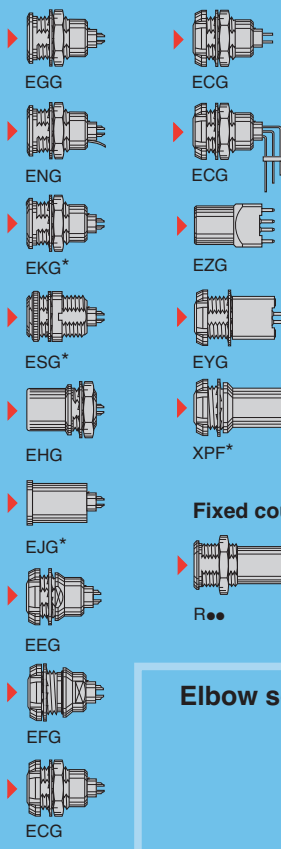

Fixed coupler

Free sockets

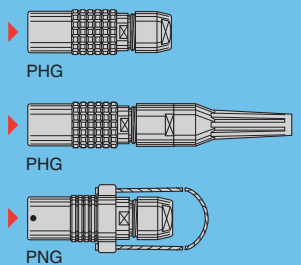

Fixed sockets

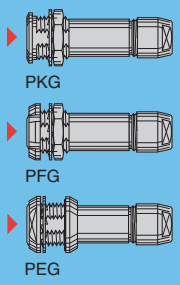

Note: * Contact LEMO for details.

Elbow socket models (page 25)

Elbow sockets

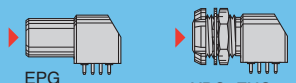

Plastic housing models (page 28)

Straight plugs

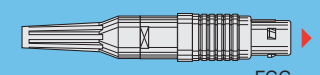

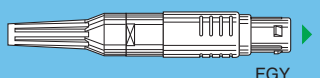

Fixed sockets

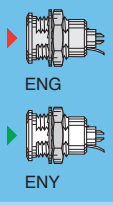

Bridge models (page 34)

Plug with two parallel sockets

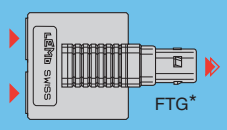

Bridge plugs

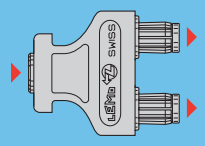

Watertight or vacuumtight models (page 30)

Fixed plug

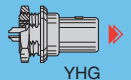

Fixed sockets

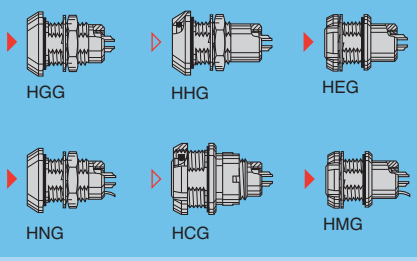

Fixed coupler

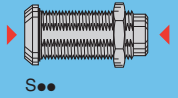

Threaded-latching models (page 35)

Straight plugs

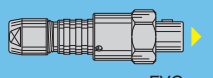

Fixed socket



Elbow socket

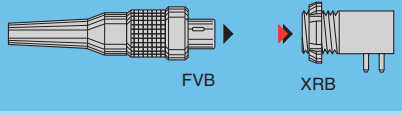

Part Numbering System

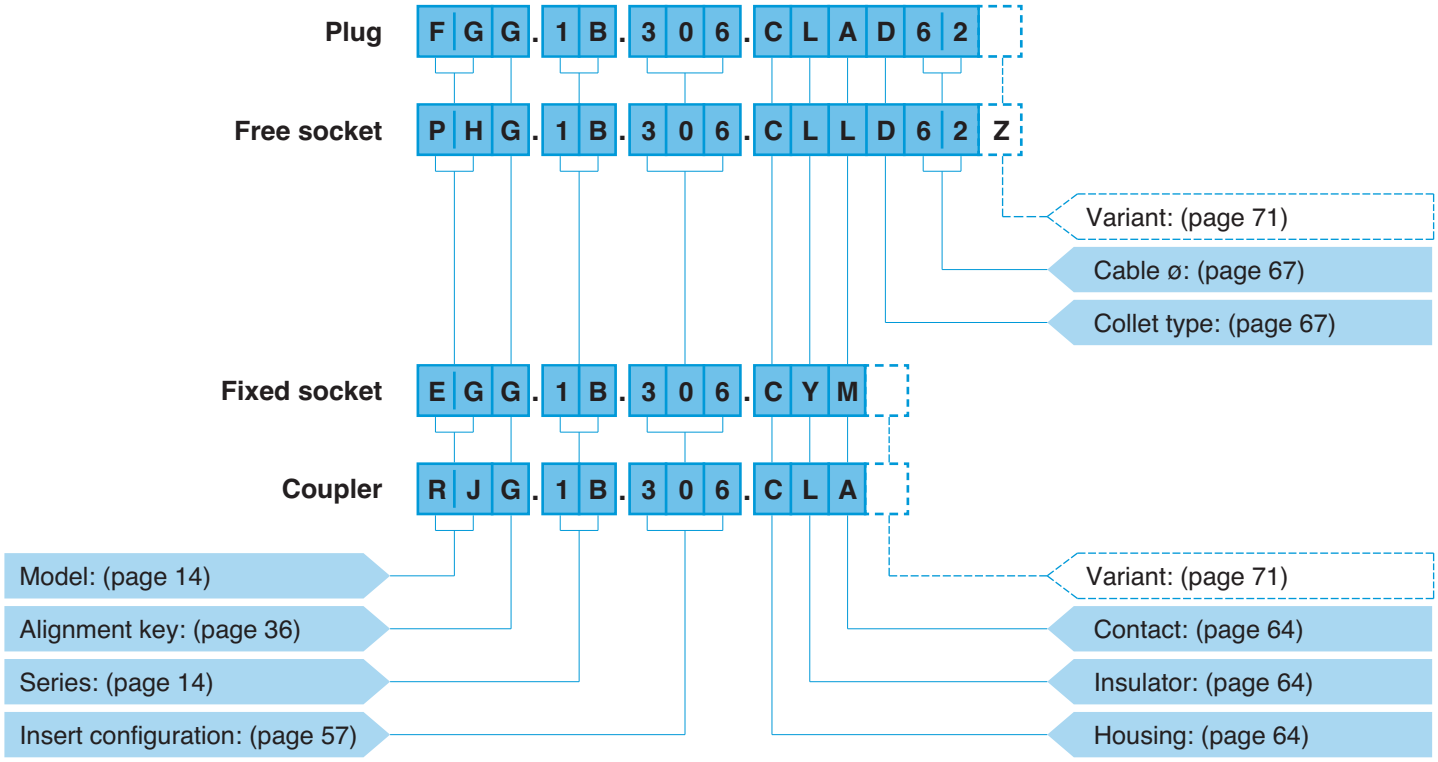

FGG.1B.306.CLAD62 = straight plug with key (G) and cable collet, 1B series, multipole type with 6 contacts, outer shell in chrome-plated brass, PEEK insulator, male solder contacts, D type collet for 6.0 mm diameter cable.

PHG.1B.306.CLLD62Z = free socket with key (G) and cable collet, 1B series, multipole type with 6 contacts, outer shell in chrome-plated brass, PEEK insulator, female solder contacts, D type collet for 6.0 mm diameter cable and nut for fitting a bend relief.

EGG.1B.306.CYM = fixed socket, nut fixing, with key (G), 1B series, multipole type with 6 contacts, outer shell in chrome-plated brass, PEEK extended insulator, female crimp contacts.

RJG.1B.306.CLA = straight fixed coupler with keys (J) at the flange end and key (G) at the other end, 1B series, multipole type with 6 contacts, outer shell in chrome-plated brass, PEEK insulator, male-female contacts.

Part Section Showing Internal Components

Fixed socket

1. outer shell
2. earthing crown
3. retaining ring
4. hexagonal nut
5. locking washer
6. insulator
7. female contact

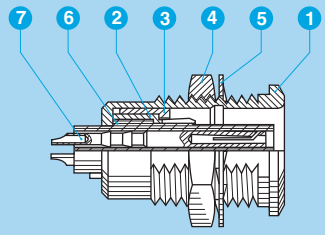

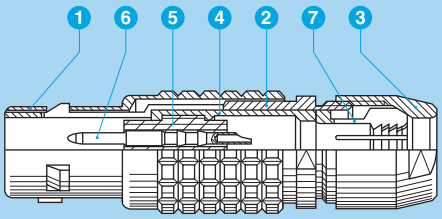

Straight plug

1. outer shell
2. latch sleeve
3. collet nut
4. split insert carrier
5. insulator
6. male contact
7. collet

Metal housing models

Technical Characteristics

Mechanical and Climatical

Characteristics	Value	Standard
Endurance	> 5000 cycles	IEC 60512-5 test 9a
Humidity	up to 95% at 60° C	
Temperature range	- 55° C, + 250° C	
Resistance to vibrations	10-2000 Hz, 15g	IEC 60512-4 test 6d
Shock resistance	100 g, 6 ms	IEC 60512-4 test 6c
Salt spray corrosion test	> 1000h	IEC 60512-6 test 11f
Protection index (mated)	IP 50	IEC 60529
Climatical category	55/175/21	IEC 60068-1

Electrical

Characteristics		Value	Standard
Shielding efficiency	at 10 MHz	> 75 dB	IEC 60169-1-3
	at 1 GHz	> 40 dB	IEC 60169-1-3

Note:
the various tests have been carried out with FGG and EGG connector pairs, with chrome-plated brass shell and PEEK insulator.
Detailed electrical characteristics, as well as materials and treatment are presented in the chapter Technical Characteristics on page 205.

FGG Straight plug, key (G) or keys (A…M and R), cable collet



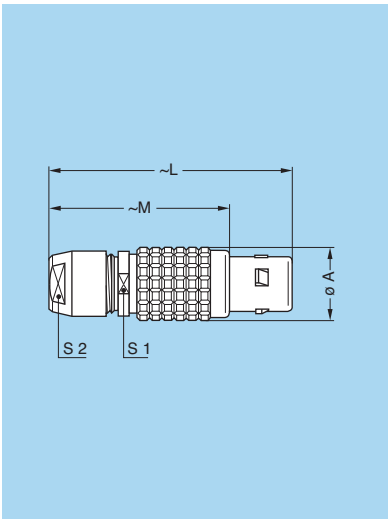

Reference		Dimensions (mm)				
Model	Series	A	L	M	S1	S2
FGG	00[1)]	6.4	28.5	20.5	5.5	5
FGG	0B	9.5	36.0	26.0	8.0	7
FGG	1B	12.0	43.0	32.0	10.0	9
FGG	XB	13.0	44.0	33.5	11.0	10
FGG	2B	15.0	50.0	38.0	13.0	12
FGG	3B	18.0	58.0	43.0	15.0	14
FGG	4B	25.0	75.0	57.0	21.0	20
FGG	5B	35.0	103.0	78.0	31.0	30

M1 Cable assembly (page 191)

Note: [1)] the surface design of the 00 series is different.

FGG Straight plug, key (G) or keys (A…M), cable collet and nut for fitting a bend relief [2)]



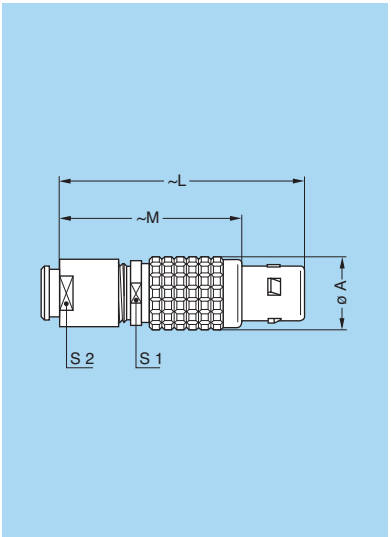

Reference		Dimensions (mm)				
Model	Series	A	L	M	S1	S2
FGG	00[1)]	6.4	28.7	20.7	5.5	6
FGG	0B	9.5	35.0	25.0	8.0	7
FGG	1B	12.0	42.0	31.0	10.0	9
FGG	XB	13.0	47.5	37.0	11.0	10
FGG	2B	15.0	49.0	37.0	13.0	12
FGG	3B	18.0	56.5	41.5	15.0	15
FGG	4B	25.0	71.0	53.0	21.0	20

M1 Cable assembly (page 191)

Note: [1)] the surface design of the 00 series is different.

Note: [2)] to order, add a «Z» at the end of the reference.
The bend relief must be ordered separately (see page 167).

JGG Straight plug, short version, key (G), cable collet



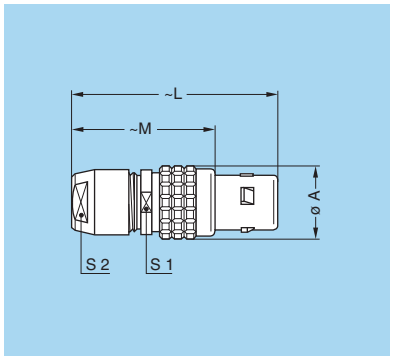

Reference		Dimensions (mm)				
Model	Series	A	L	M	S1	S2
JGG	**0B**	9.5	32	22	8	7

M4 Cable assembly (page 193)

FFG Straight plug, non-latching, key (G) or keys (A…M), cable collet



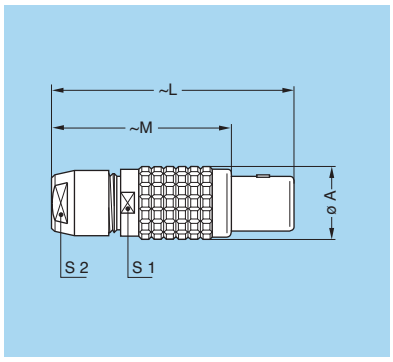

Reference		Dimensions (mm)				
Model	Series	A	L	M	S1	S2
FFG	**0B**	9.5	36	26	8	7
FFG	**1B**	12.0	43	32	10	9
FFG	**2B**	15.0	50	38	13	12
FFG	**3B**	18.0	58	43	15	14
FFG	**4B**	25.0	75	57	21	20

M1 Cable assembly (page 191)

FNG Straight plug, key (G) or keys (A…M and R), cable collet and lanyard release

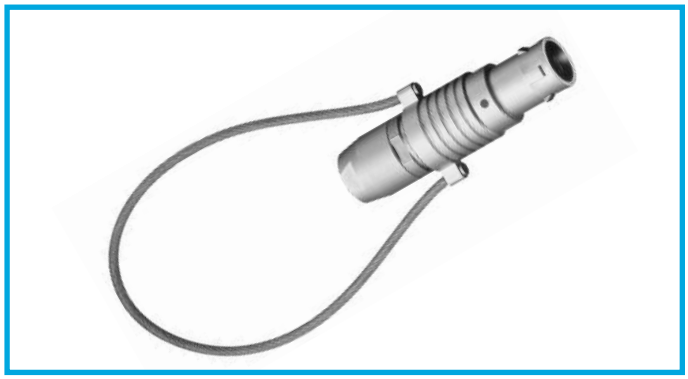

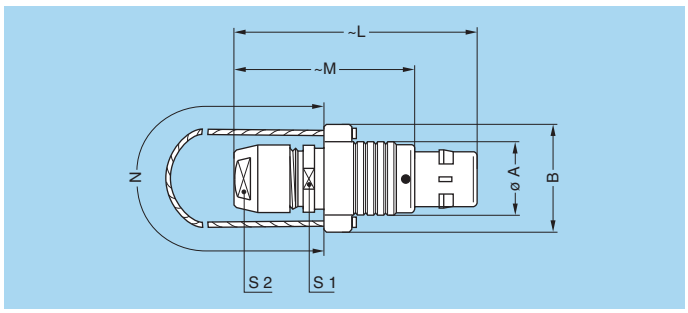

Reference		Dimensions (mm)						
Model	Series	A	B	L	M	N	S1	S2
FNG	**0B**	9.5	15.5	36.0	26.0	140	8	7
FNG	**1B**	12.0	18.0	43.0	32.0	140	10	9
FNG	**2B**	15.0	21.0	49.0	37.0	160	13	12
FNG	**3B**	18.0	25.0	58.0	43.0	190	15	14
FNG	**4B**	25.0	32.0	75.0	57.0	230	21	20
FNG	**5B**	35.0	42.0	103.0	78.0	300	31	30

M1 Cable assembly (page 191)

Note: cable material: stainless steel with Polyamide sheath.

FEG Straight plug, key (G) or keys (A…L), cable collet, front seal and nut for fitting a bend relief [1)]
(IP 54 protection index when mated)



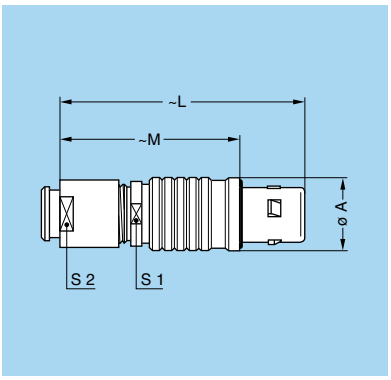

Reference		Dimensions (mm)				
Model	Series	A	L	M	S1	S2
FEG	0B	11.0	35.0	25.0	8	7
FEG	1B	13.5	42.0	33.0	10	9
FEG	2B	16.5	48.0	36.0	13	12
FEG	3B	19.0	56.5	41.5	15	15

M1 Cable assembly (page 191)

Note: [1)] to order, add a «Z» at the end of the reference.
The bend relief must be ordered separately (see page 167).

FDG Straight plug, long version, key (G) or keys (A…L), cable collet

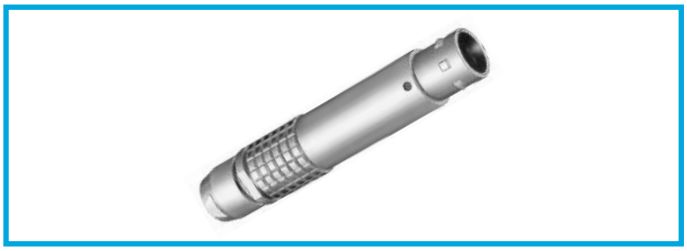

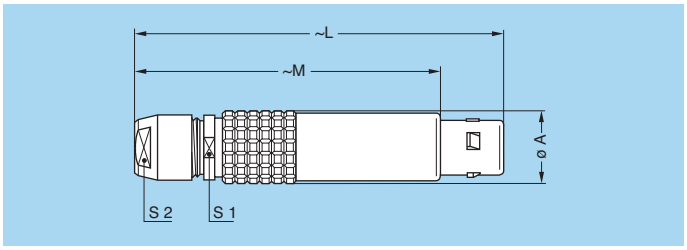

Reference		Dimensions (mm)				
Model	Series	A	L	M	S1	S2
FDG	1B	12	68	57	10	9
FDG	2B	15	79	67	13	12

M2 Cable assembly (page 193)

FWG Fixed plug, nut fixing, key (G) or keys (A…L)



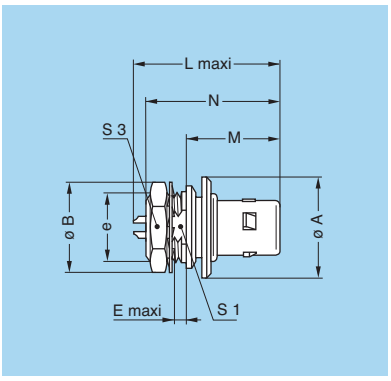

Reference		Dimensions (mm)								
Model	Series	A	B	e	E	L	M	N[1)]	S1	S3
FWG	0B	14.0	12.4	M9x0.6	1.8	22.5	14.5	19.5	8.2	11
FWG	1B	18.0	15.8	M12x1.0	2.9	24.9	17.0	24.8	10.5	14
FWG	2B	19.5	19.2	M15x1.0	4.1	28.6	18.0	27.3	13.5	17
FWG	3B	25.0	25.0	M18x1.0	4.2	32.1	23.0	31.5	16.5	22

P9 Panel cut-out (page 179)

Note: [1)] maximum length with crimp contacts

FAG Fixed plug, non-latching, nut fixing, key (G) or keys (A…M and R)



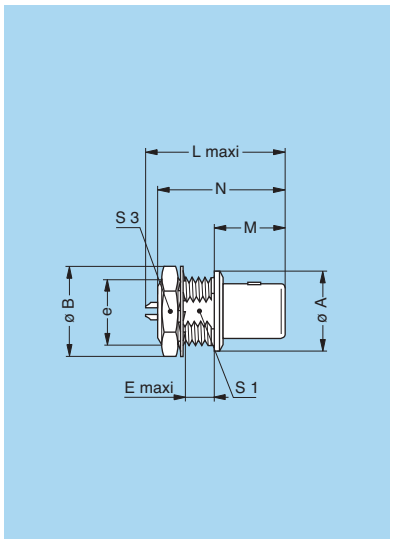

Reference		Dimensions (mm)								
Model	Series	A	B	e	E	L	M	N[1)]	S1	S3
FAG	00	8	10.2	M7x0.5	2.9	18.1	9.0	15.0	6.3	9
FAG	0B	10	12.4	M9x0.6	4.2	20.8	11.5	18.9	8.2	11
FAG	1B	14	15.8	M12x1.0	5.4	25.2	12.5	21.6	10.5	14
FAG	2B	18	19.2	M15x1.0	6.0	28.7	13.8	23.9	13.5	17
FAG	3B	22	25.0	M18x1.0	5.8	32.1	17.0	30.2	16.5	22
FAG	4B	29	34.0	M25x1.0	6.8	37.1	20.5	34.7	23.5	30
FAG	5B	40	40.0	M35x1.0	6.8	47.1	28.0	42.8	33.5	–

P1 Panel cut-out (page 179)

Note: The 5B series is delivered without locking washer or tapered washer and with a round nut.

Note: [1)] maximum length with crimp contacts.

FPG Elbow (90°) plug, key (G) or keys (A…M and R), cable collet



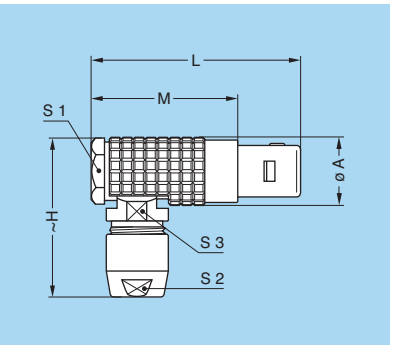

Reference		Dimensions (mm)						
Model	Series	A	H	L	M	S1	S2	S3
FPG	00	7.5	18	24.5	16.5	6.5	5	5.3
FPG	0B	9.5	23	30.0	20.0	8.0	7	8.0
FPG	1B	12.0	29	36.0	25.0	11.0	9	10.0
FPG	2B	15.0	35	41.5	29.5	13.5	12	13.0

M3 Cable assembly (page 191)

FHG Elbow (90°) plug, key (G) or keys (A…M and R), cable collet



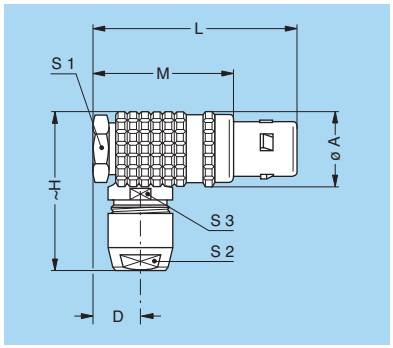

Reference		Dimensions (mm)							
Model	Series	A	D	H	L	M	S1	S2	S3
FHG	3B	19	10	37	50	35	17	14	15
FHG	4B	26	15	52	67	49	22	20	21
FHG	5B	36	21	74	90	65	32	30	31

M3 Cable assembly (page 191)

FSG Anglissimo right angle plug, key (G) or keys (A…M), cable collet



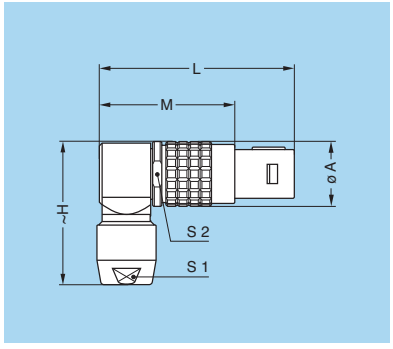

Reference		Dimensions (mm)					
Model	Series	A	H	L	M	S1	S2
FSG	00	8.0	18.1	24.8	16.8	5	7
FSG	0B	10.0	22.4	30.3	20.3	7	9
FSG	1B	12.0	26.4	36.5	25.5	9	11
FSG	2B	16.5	34.5	44.0	32.0	12	15

M5 Cable assembly (page 192)

EGG Fixed socket, nut fixing, key (G) or keys (A…M and R)



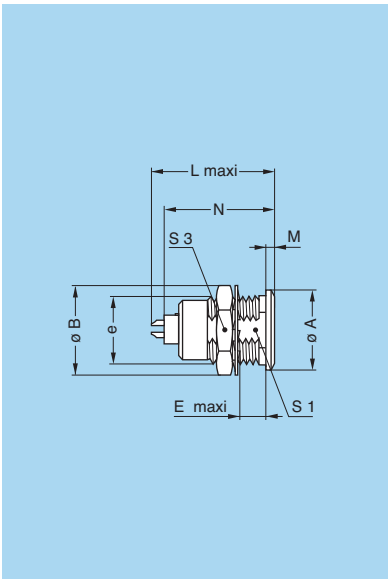

Reference		Dimensions (mm)								
Model	Series	A	B	e	E	L	M	N[1)]	S1	S3
EGG	**00**	8	10.2	M7x0.5	6.0	15.5	1.0	13.7	6.3	9
EGG	**0B**	10	12.4	M9x0.6	7.0	20.7	1.2	19.1	8.2	11
EGG	**1B**	14	15.8	M12x1.0	7.5	23.0	1.5	21.1	10.5	14
EGG	**XB**	16	19.0	M14x1.0	7.0	23.5	1.5	20.0	12.5	17
EGG	**2B**[2)]	18	19.2	M15x1.0	8.5	26.7	1.8	24.6	13.5	17
EGG	**3B**	22	25.0	M18x1.0	11.5	30.7	2.0	28.1	16.5	22
EGG	**4B**	28	34.0	M25x1.0	12.0	35.7	2.5	34.1	23.5	30
EGG	**5B**	40	40.0	M35x1.0	11.0	43.5	3.0	39.6	33.5	–

P1 Panel cut-out (page 179)

Note: The 5B series is delivered with a tapered washer and a round nut.

Note: [1)] maximum length with crimp contacts.
[2)] EGG.2B.304.CLL and EGG.2B.307.CLL are UL 508A under file E119802.

ENG Fixed socket with earthing tag, nut fixing, key (G) or keys (A…M)



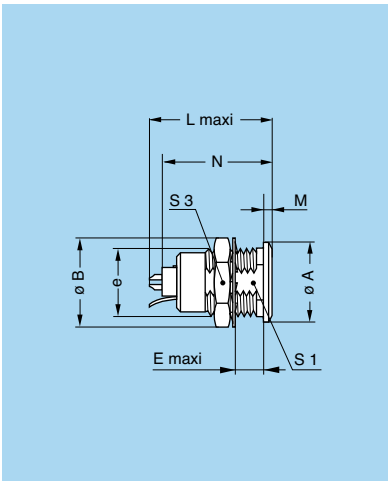

Reference		Dimensions (mm)								
Model	Series	A	B	e	E	L	M	N[1)]	S1	S3
ENG	**00**	8	10.2	M7x0.5	6.0	15.5	1.0	13.7	6.3	9
ENG	**0B**	10	12.4	M9x0.6	7.0	20.7	1.2	19.1	8.2	11
ENG	**1B**[2)]	14	15.8	M12x1.0	7.5	23.0	1.5	21.1	10.5	14
ENG	**2B**	18	19.2	M15x1.0	8.5	26.7	1.8	24.6	13.5	17
ENG	**3B**	22	25.0	M18x1.0	11.5	30.7	2.0	28.1	16.5	22
ENG	**4B**	28	34.0	M25x1.0	12.0	35.7	2.5	34.1	23.5	30

P1 Panel cut-out (page 179)

Note:
[1)] maximum length with crimp contacts.
[2)] for the 1B series the earthing tag is on the same side of the key.

EHG Fixed socket, nut fixing, key (G) or keys (A…M and R), and protruding shell



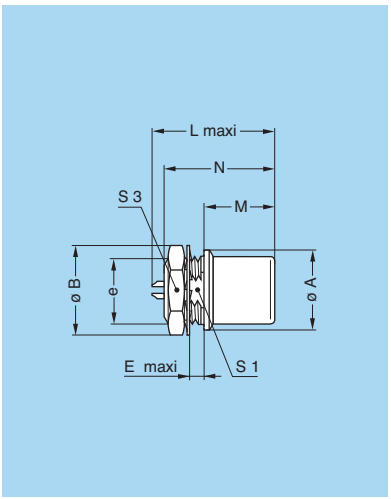

Reference		Dimensions (mm)								
Model	Series	A	B	e	E	L	M	N[1)]	S1	S3
EHG	**00**	8	10.2	M7x0.5	2.0	15.5	8.5	13.7	6.3	9
EHG	**0B**	10	12.4	M9x0.6	2.0	19.5	12.5	19.1	8.2	11
EHG	**1B**	14	15.8	M12x1.0	4.0	21.7	12.0	21.1	10.5	14
EHG	**2B**	18	19.2	M15x1.0	5.1	22.7	12.5	24.6	13.5	17
EHG	**3B**	22	25.0	M18x1.0	7.1	30.7	13.5	30.3	16.5	22
EHG	**5B**	40	40.0	M35x1.0	2.5	43.5	28.0	38.5	33.5	–

P1 Panel cut-out (page 179)

Note: The 5B series is delivered without locking washer or tapered washer and with a round nut.

Note: [1)] maximum length with crimp contacts.

EEG **Fixed socket, nut fixing, key (G) or keys (A…M and R)** (back panel mounting)



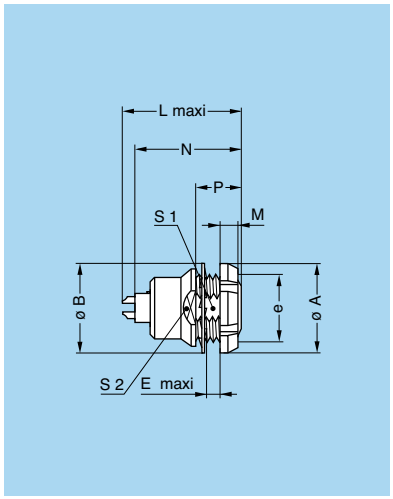

Reference		Dimensions (mm)									
Model	Series	A	B	e	E	L	M	N[1)]	P	S1	S2
EEG	**00**	10	9.5	M7x0.5	2.3	15.5	2.5	13.7	6.0	6.3	7.5
EEG	**0B**	12	12.5	M9x0.6	2.4	20.7	2.5	19.1	6.3	8.2	9.0
EEG	**1B**	16	16.0	M12x1.0	6.5	23.0	3.5	21.1	11.0	10.5	13.0
EEG	**2B**	20	20.0	M15x1.0	4.3	26.7	3.5	24.6	9.0	13.5	15.0
EEG	**3B**	24	25.0	M18x1.0	6.1	30.7	4.5	28.1	12.0	16.5	20.0
EEG	**5B**	41	40.0	M35x1.0	13.5	43.5	5.0	39.6	19.5	33.5	38.0

P1 Panel cut-out (page 179)

Note: The 3B and 5B series are delivered with a conical nut.
The 5B series is delivered without locking washer or tapered washer.

Note: [1)] maximum length with crimp contacts.

EFG **Fixed socket, nut fixing, key (G) or keys (A…M), with two flats on the shell and O-ring** (back panel mounting)



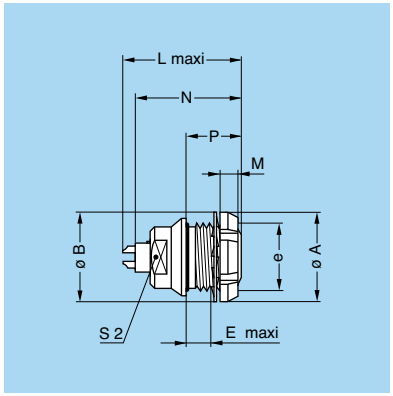

Reference		Dimensions (mm)								
Model	Series	A	B	e	E	L	M	N[1)]	P	S2
EFG	**0B**	12	12.5	M9x0.6	5.5	20.7	2.5	19.1	9	8

P2 Panel cut-out (page 179)

Note: [1)] maximum length with crimp contacts.

ECG **Fixed socket with two nuts, key (G) or keys (A…M and R)** (back panel mounting)



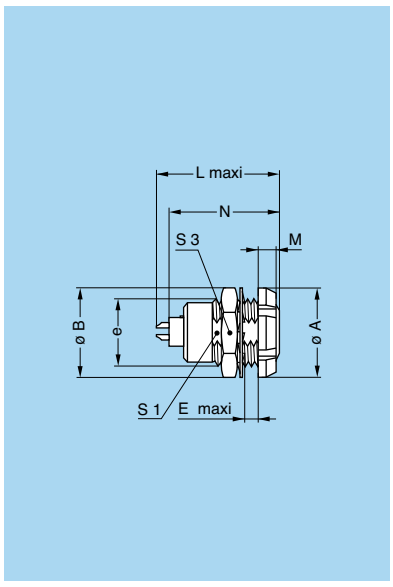

Reference		Dimensions (mm)								
Model	Series	A	B	e	E	L	M	N[1)]	S1	S3
ECG	**00**	10	10.2	M7x0.5	4.3	13.7	2.5	13.7	6.3	9
ECG	**0B**	12	12.4	M9x0.6	5.5	20.7	2.5	19.1	8.2	11
ECG	**1B**	16	15.8	M12x1.0	6.0	23.0	3.5	21.1	10.5	14
ECG	**XB**	18	19.0	M14x1.0	6.0	23.5	3.5	20.0	12.5	17
ECG	**2B**	20	19.2	M15x1.0	6.5	26.7	3.5	24.6	13.5	17
ECG	**3B**	24	25.0	M18x1.0	9.0	30.7	4.5	28.1	16.5	22
ECG	**4B**	30	34.0	M25x1.0	10.0	35.7	4.5	32.6	23.5	30
ECG	**5B**	41	40.0	M35x1.0	9.0	43.5	5.0	39.6	33.5	–

P1 Panel cut-out (page 179)

Note: The 3B, 4B and 5B series are delivered with a conical nut.
The 5B series is delivered with a tapered washer and a round nut.

Note: [1)] maximum length with crimp contacts.

ECG Fixed socket with two nuts, key (G) or keys (A…F and R) and straight contact for printed circuit
(back panel mounting)



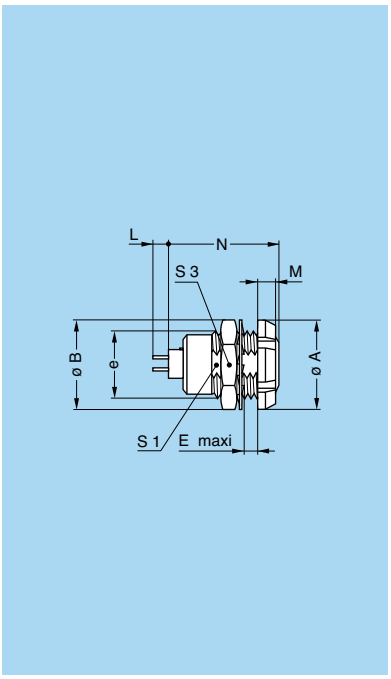

Reference		Dimensions (mm)							
Model	Series	A	B	e	E	M	N	S1	S3
ECG	**00**	10	10.2	M7x0.5	4.3	2.5	13.7	6.3	9
ECG	**0B**	12	12.4	M9x0.6	5.5	2.5	16.1	8.2	11
ECG	**1B**	16	15.8	M12x1.0	6.0	3.5	19.8	10.5	14
ECG	**XB**	18	19.0	M14x1.0	6.0	3.5	20.0	12.5	17
ECG	**2B**	20	19.2	M15x1.0	6.5	3.5	21.8	13.5	17
ECG	**3B**	24	25.0	M18x1.0	9.0	4.5	25.8	16.5	22
ECG	**4B**	30	34.0	M25x1.0	10.0	4.5	29.8	23.5	30
ECG	**5B**	41	40.0	M35x1.0	9.0	5.0	36.8	33.5	–

P1 Panel cut-out (page 179)

P15 PCB drilling pattern (page 182)

Note: The 3B, 4B and 5B series are delivered with a conical nut.
The 5B series is delivered with a tapered washer and a round nut.

Note: This contact type is available for E●● socket models fitted with female contacts.
Length «L» depends on the number of contacts, see table on page 185.

ECG Fixed socket with two nuts, key (G) or keys (A…F) with elbow (90°) contact for printed circuit
(back panel mounting)



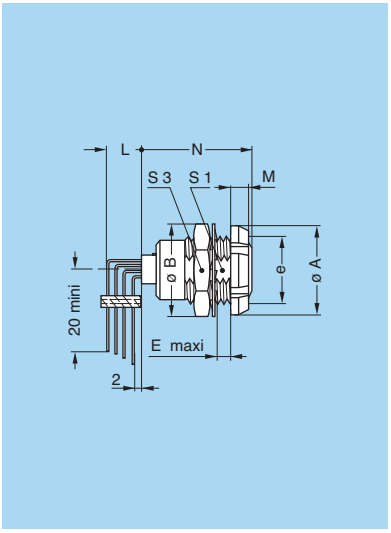

Reference		Dimensions (mm)							
Model	Series	A	B	e	E	M	N max	S1	S3
ECG	**0B**	12	12.4	M9x0.6	5.5	2.5	18.3	8.2	11
ECG	**1B**	16	15.8	M12x1.0	6.0	3.5	20.3	10.5	14
ECG	**2B**	20	19.2	M15x1.0	6.5	3.5	22.3	13.5	17
ECG	**3B**	24	25.0	M18x1.0	9.0	4.5	25.8	16.5	22

P1 Panel cut-out (page 179)

P17 PCB drilling pattern (page 186)

Note: The 3B series is delivered with a conical nut.

Note: this female contact type is available for all back panel mounting socket models.
Length «L» depends on the number of contacts, see PCB drilling pattern on page 186. For male contacts, sockets are available upon request, with J, K or L keys.

EZG Straight socket for printed circuit, key (G) or keys (A, B)

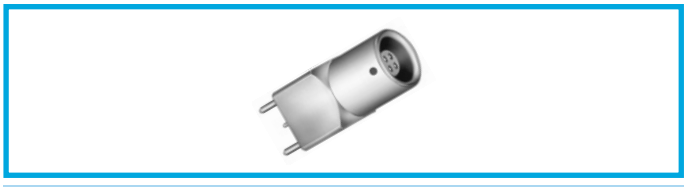

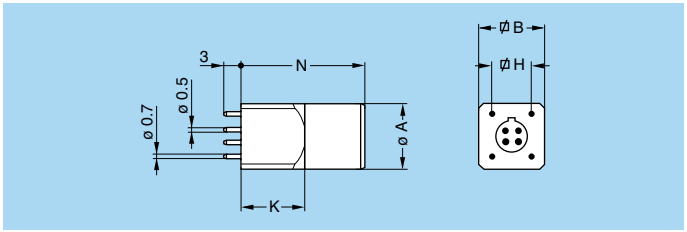

Reference		Dimensions (mm)				
Model	Series	A	B	H	K	N
EZG	**00**	6.8	7	5.08	7	14

P15+**P16** PCB drilling pattern (pages 182 and 185)

EZG Straight socket for printed circuit, key (G) or keys (A…F)

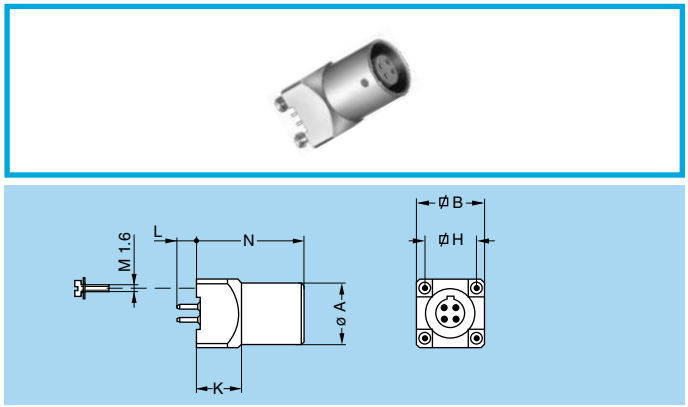

Reference		Dimensions (mm)				
Model	Series	A	B	H	K	N
EZG	**0B**	9	10	7.62	8	15.0
EZG	**1B**	11	12	7.62	8	19.0
EZG	**2B**	14	15	10.16	9	22.5

P15+P16 PCB drilling pattern (pages 182 and 185)

Note:
Length «L» depends on the number of contacts, see table on page 185.

EYG Fixed socket for printed circuit, nut fixing, key (G) or keys (A…F) (back panel mounting)

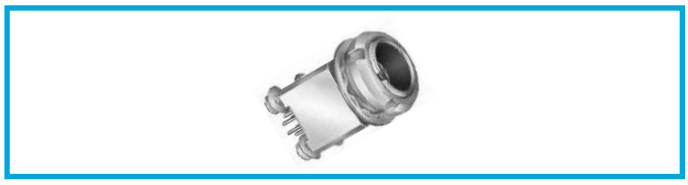

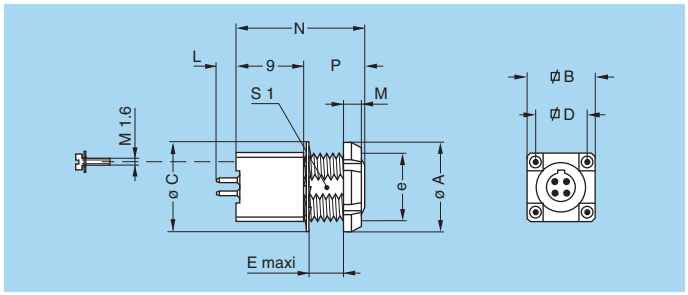

Reference		Dimensions (mm)									
Model	Series	A	B	C	D	e	E	M	N	P	S1
EYG	**0B**	12	10	12.5	7.62	M9x0.6	2.6	2.5	15.0	6.0	8.2
EYG	**1B**	14	12	16.0	7.62	M11x0.5	5.0	3.5	19.0	10.0	–
EYG	**2B**	20	15	19.5	10.16	M15x1.0	7.5	3.5	22.5	13.5	13.5

P1 Panel cut-out 0B and 2B series (page 179)

P10 Panel cut-out 1B series (page 179)

P15+P16 PCB drilling pattern (pages 182 and 185)

Note: Length «L» depends on the number of contacts, see page 185.

PHG Free socket, key (G) or keys (A…M and R), cable collet



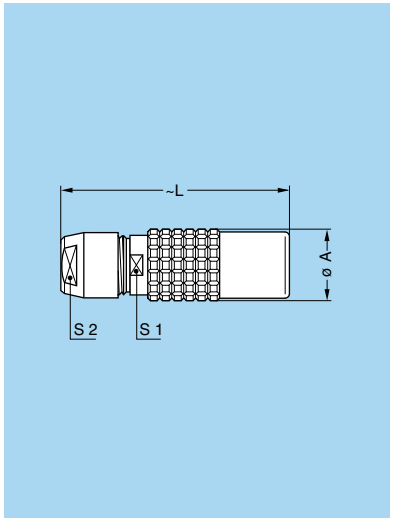

Reference		Dimensions (mm)			
Model	Series	A	L	S1	S2
PHG	**00**[1)]	6.8	26.0	5.5	5
PHG	**0B**	9.5	35.5	8.0	7
PHG	**1B**	12.5	40.5	10.0	9
PHG	**XB**	13.0	46.0	11.0	10
PHG	**2B**	16.5	47.0	13.0	12
PHG	**3B**	19.0	56.0	15.0	14
PHG	**4B**	26.0	73.0	21.0	20
PHG	**5B**	36.0	99.0	31.0	30

M1 Cable assembly (page 191)

Note: [1)] the surface design of the 00 series is different.

PHG Free socket, key (G) or keys (A…M), cable collet and nut for fitting a bend relief [2)]



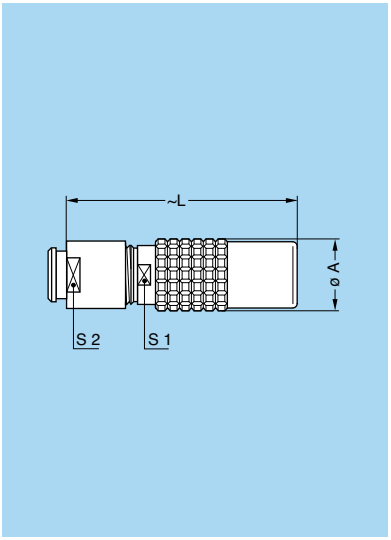

Reference		Dimensions (mm)			
Model	Series	A	L	S1	S2
PHG	**00**[1)]	6.8	34.0	5.5	6
PHG	**0B**	9.5	34.5	8.0	7
PHG	**1B**	12.5	39.5	10.0	9
PHG	**XB**	13.0	49.5	11.0	10
PHG	**2B**	16.5	46.0	13.0	12
PHG	**3B**	19.0	54.5	15.0	15
PHG	**4B**	26.0	69.0	21.0	20

M1 Cable assembly (page 191)

Note: [1)] the surface design of the 00 series is different.

Note: [2)] to order, add a «Z» at the end of the reference.
The bend relief must be ordered separately (see page 167).

PNG Free socket, nut fixing, key (G) or keys (A…L and R), cable collet with lanyard release

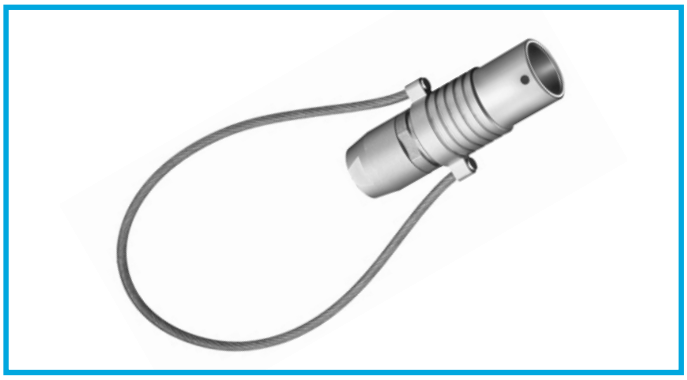

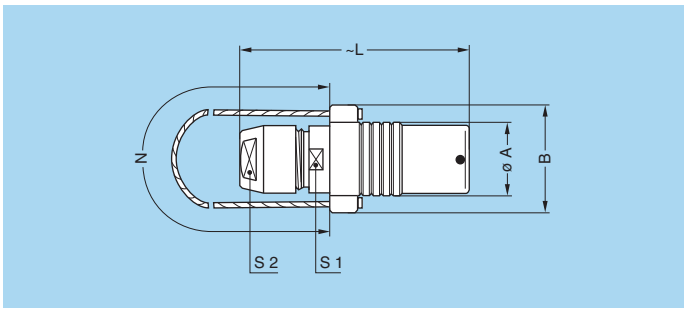

Reference		Dimensions (mm)					
Model	Series	A	B	L	N	S1	S2
PNG	**1B**	12.4	18.4	40.5	140	10	9
PNG	**2B**	16.5	22.5	47.0	160	13	12
PNG	**3B**	19.0	26.0	56.0	190	15	14
PNG	**4B**	26.0	33.0	73.0	230	21	20
PNG	**5B**	36.0	43.0	99.0	300	31	30

M1 Cable assembly (page 191)

Note: cable material: stainless steel with Polyamide sheath.

PKG Fixed socket, nut fixing, key (G) or keys (A…M and R), cable collet



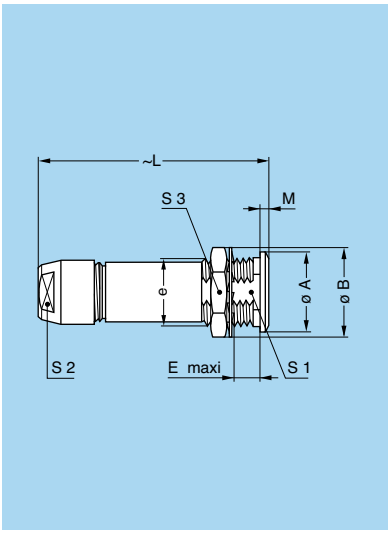

Reference		Dimensions (mm)								
Model	Series	A	B	e	E	L	M	S1	S2	S3
PKG	**00**	8	10.2	M7x0.5	6.5	26.0	1.0	6.3	5	9
PKG	**0B**	10	12.4	M9x0.6	7.0	35.5	1.2	8.2	7	11
PKG	**1B**	14	15.8	M12x1.0	7.5	40.5	1.5	10.5	9	14
PKG	**2B**	18	19.2	M15x1.0	8.5	47.0	1.8	13.5	12	17
PKG	**3B**	22	25.0	M18x1.0	11.5	56.0	2.0	16.5	14	22
PKG	**4B**	28	34.0	M25x1.0	12.0	73.0	2.5	23.5	20	30
PKG	**5B**	40	40.0	M35x1.0	11.0	99.0	3.0	33.5	30	–

P1 Panel cut-out (page 179)

M1 Cable assembly (page 191)

Note: the 5B series is delivered with a tapered washer and a round nut.

PFG Fixed socket, with two nuts, key (G) or keys (A…M and R), cable collet (back panel mounting)



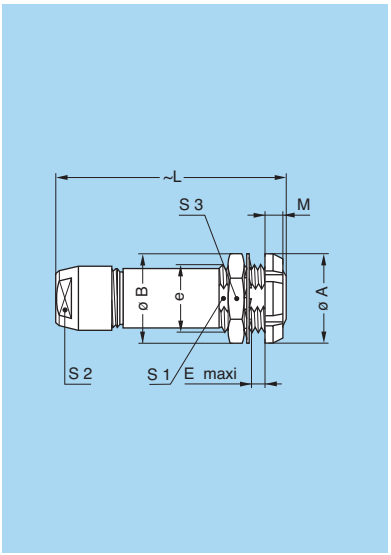

Reference		Dimensions (mm)								
Model	Series	A	B	e	E	L	M	S1	S2	S3
PFG	**00**	10	10.2	M7x0.5	5.3	26.0	2.5	6.3	5	9
PFG	**0B**	12	12.4	M9x0.6	5.0	35.5	2.5	8.2	7	11
PFG	**1B**	16	15.8	M12x1.0	5.0	40.5	3.5	10.5	9	14
PFG	**2B**	20	19.2	M15x1.0	6.5	47.0	3.5	13.5	12	17
PFG	**3B**	24	25.0	M18x1.0	9.0	56.0	4.5	16.5	14	22
PFG	**4B**	30	34.0	M25x1.0	11.0	73.0	4.5	23.5	20	30
PFG	**5B**	41	40.0	M35x1.0	10.0	99.0	5.0	33.5	30	–

P1 Panel cut-out (page 179)

M1 Cable assembly (page 191)

Note: the 3B, 4B and 5B series are delivered with a conical nut.
The 5B series is delivered with a tapered washer and a round nut.

PEG Fixed socket, nut fixing, key (G) or keys (A…L), cable collet (back panel mounting)



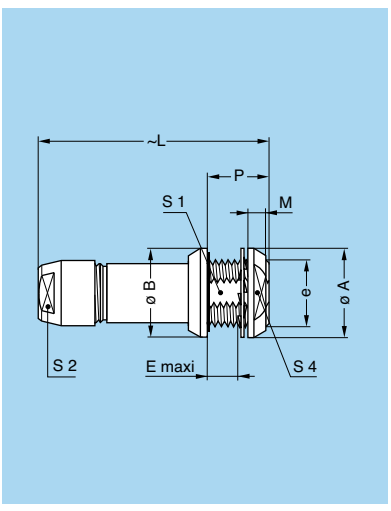

Reference		Dimensions (mm)								
Model	Series	A	B	e	E	L	M	P	S1	S2	S4
PEG	**3B**	24	25	M18x1.0	5.0	56	4.5	12	16.5	14	20
PEG	**4B**	32	34	M25x1.0	12.5	73	5.0	20	23.5	20	27

P1 Panel cut-out (page 179)

M1 Cable assembly (page 191)

Note: the 4B series has an o-ring on the flange.

R●● Fixed coupler, nut fixing, key (G) or keys (A and J) at the flange end and keys (J, K or M) at the other end

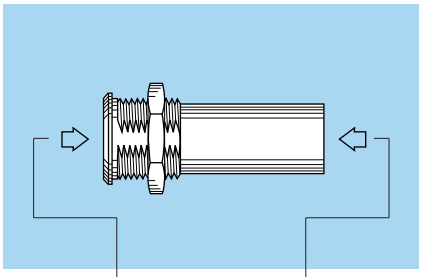



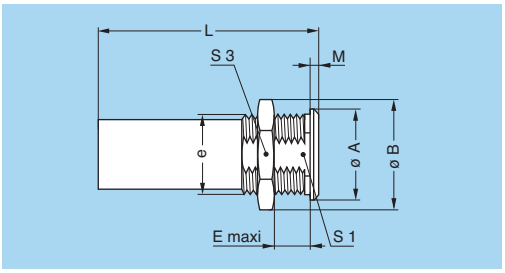

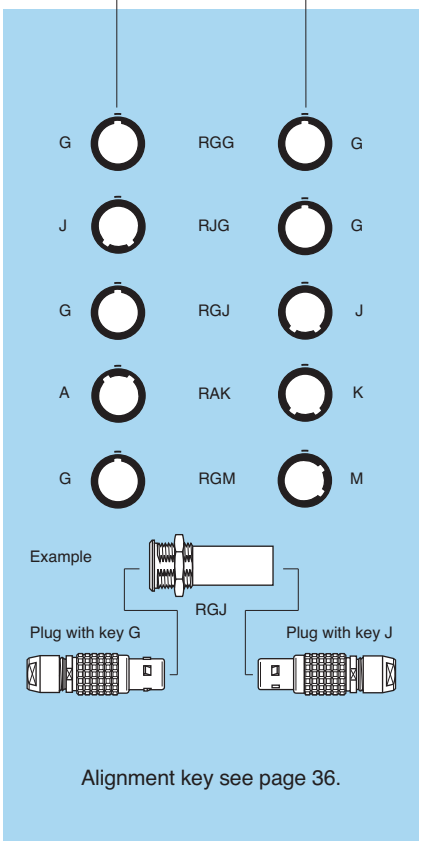

Alignment key see page 36.

Reference		Contacts	Dimensions (mm)							
Model	Series	Type	A	B	e	E	L	M	S1	S3
RGG[1]	**0B**	female – female	12	13.8	M10x0.75	8.0	34	2.0	9.0	12
RGG[2]	**0B**	female – female	12	13.8	M10x0.75	8.0	43	2.0	9.0	12
RJG	**0B**	male – female	12	13.8	M10x0.75	8.0	34	2.0	9.0	12
RGJ	**0B**	female – male	12	13.8	M10x0.75	8.0	34	2.0	9.0	12
RAK	**0B**	female – male	12	13.8	M10x0.75	8.0	34	2.0	9.0	12
RGM	**0B**	female – male	12	13.8	M10x0.75	8.0	34	2.0	9.0	12
RGG[3]	**1B**	female – female	16	19.2	M14x1.00	8.5	47	2.5	12.5	17
RJG	**1B**	male – female	16	19.2	M14x1.00	8.5	39	2.5	12.5	17
RGJ	**1B**	female – male	16	19.2	M14x1.00	8.5	39	2.5	12.5	17
RJG	**2B**	male – female	20	21.5	M16x1.00	12.0	44	4.0	15.0	19
RGJ	**2B**	female – male	20	21.5	M16x1.00	12.0	44	4.0	15.0	19
RGJ	**3B**	female – male	25	27.0	M20x1.00	32.0	53	4.0	18.5	24
RGJ	**4B**	female – male	34	34.0	M25x1.00	50.0	65	4.0	23.5	30

P4 Panel cut-out (page 179)

Note:
[1] only available with two contacts.
[2] RGG.0B only available from 3 till 5 contacts.
[3] RGG.1B only available till 7 contacts.
For this fixed coupler, the first contact type mentioned is always the one at the flange end. On request, these couplers can be produced in other series, with other keys.

Elbow socket models

Technical Characteristics

Types

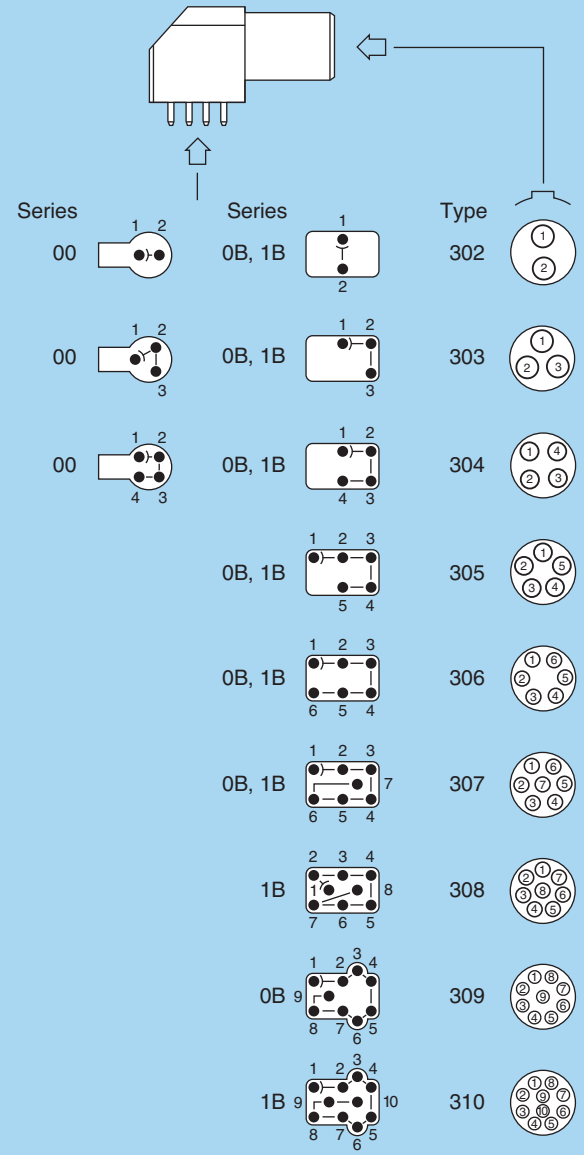

Note:
numbering sequence shown is for female contacts (G keying), for inverted contacts please contact factory.

Materials and Treatment

Component	Material	Surface Treat. (µm)		
		Cu	Ni	Au
Housing	PPS		–	
	Brass	0.5	3	–
Metallic parts	Brass	0.5	3	–
Earthing crown	Bronze	0.5	3	–
Insulator	PEEK		–	
Female contact	Bronze	0.5	3	1.5

Note:
The surface treatment standards are as follows:
– Nickel: SAE AMS QQ N 290. – Gold: ISO 27874

Electrical

Model	Series	Types	Test voltage (kV rms)[1] Contact-contact	Test voltage (kV rms)[1] Contact-shell	Rated current (A)[1]
EPG-XBG	**00**	302-303-304	1.00	1.00	2.0
EPG-EXG	**0B**	302	1.45	1.20	4.5
EPG-EXG	**0B**	303	1.70	1.60	4.5
EPG-EXG	**0B**	304	1.30	1.10	4.5
EPG-EXG	**0B**	305	1.25	1.20	4.5
EPG-EXG	**0B**	306	1.25	1.20	2.5
EPG-EXG	**0B**	307	1.00	1.00	2.0
EPG-EXG	**0B**	309	0.60	0.50	1.5
EPG-EXG	**1B**	302	1.70	1.45	4.5
EPG-EXG	**1B**	303	1.60	1.85	4.5
EPG-EXG	**1B**	304	1.70	1.80	4.5
EPG-EXG	**1B**	305	1.30	1.55	4.5
EPG-EXG	**1B**	306	1.35	1.45	4.5
EPG-EXG	**1B**	307	1.45	1.45	2.0
EPG-EXG	**1B**	308	1.30	1.30	2.0
EPG-EXG	**1B**	310	1.00	1.00	1.5
EPG	**1B**	314	1.00	1.30	1.0

Note:
[1] see calculation method, caution and suggested standard on page 213.

EPG Elbow (90°) socket for printed circuit, key (G) or keys (A…F) (solder or screw fixing)

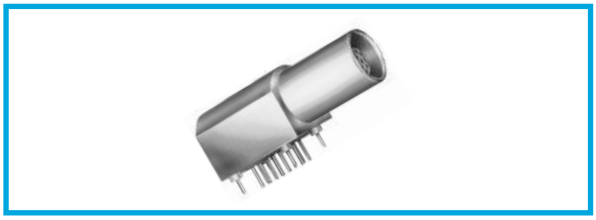

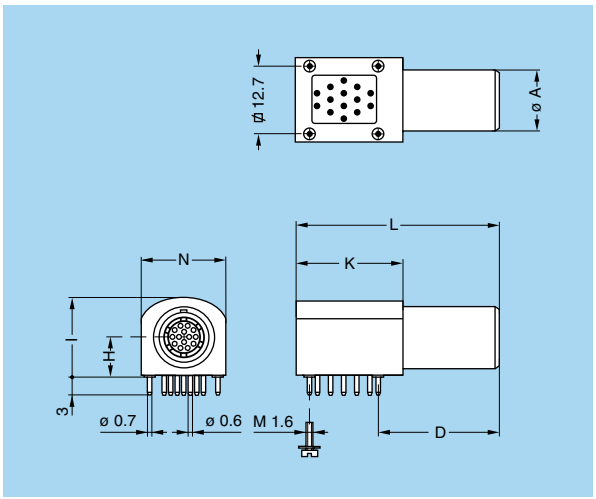

Part number	Dimensions (mm)						
	A	D	H	I	K	L	N
EPG.1B.314.NLN	11	21	7.7	14.3	19	36	15.4

P20 PCB drilling pattern (page 187)

Note: to replace the 4 ground pins by 4 screws (M1.6) add an «S» to the end of the part number. (e.g.: EPG.1B.314.NLNS)

EPG Elbow (90°) socket for printed circuit, key (G) or keys (A…F) (solder or screw fixing)



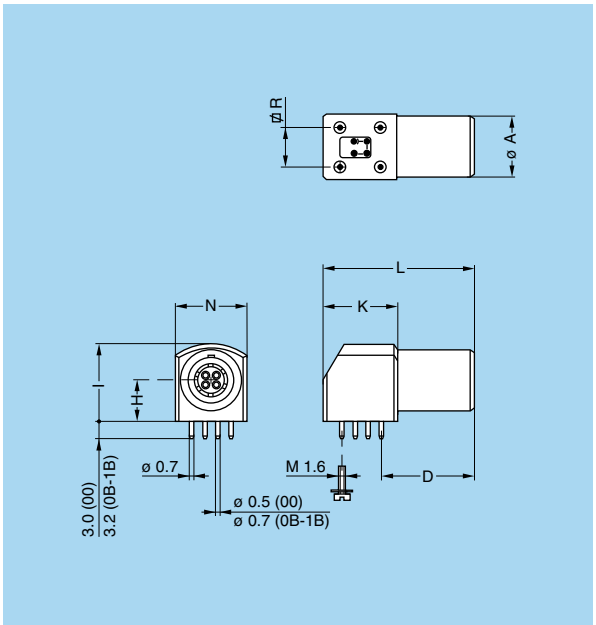

Part number	Dimensions (mm)							
	A	D	H	I	K	L	N	R
EPG.00.302.HLN	6.8	11.5	3.5	7.0	8.7	19	7.1	5.08
EPG.00.303.HLN								
EPG.00.304.HLN								
EPG.0B.302.HLN	9.0	14.6	6.7	12.6	13.3	25	11.7	7.62
EPG.0B.303.HLN								
EPG.0B.304.HLN								
EPG.0B.305.HLN								
EPG.0B.306.HLN								
EPG.0B.307.HLN								
EPG.0B.309.HLN								
EPG.1B.302.HLN	11.0	16.6	7.5	14.0	13.3	27	12.6	7.62
EPG.1B.303.HLN								
EPG.1B.304.HLN								
EPG.1B.305.HLN								
EPG.1B.306.HLN								
EPG.1B.307.HLN								
EPG.1B.308.HLN								
EPG.1B.310.HLN								

Note: In the 0B and 1B series, it is possible to replace the 4 ground pins by 4 screws (M1.6) add an «S» to the end of the part number. (e.g.: EPG.0B.307.HLNS)

P18 PCB drilling pattern 00 series (page 187)

P19 PCB drilling pattern 0B, 1B series (page 187)

EXG **Elbow (90°) socket for printed circuit with two nuts, key (G) or keys (A…F)** (solder or screw fixing) (back panel mounting)

XBG **Elbow (90°) socket fixing nut for printed circuit, key (G) or keys (A, B)** (back panel mounting)

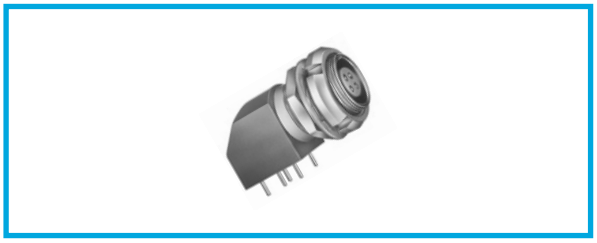

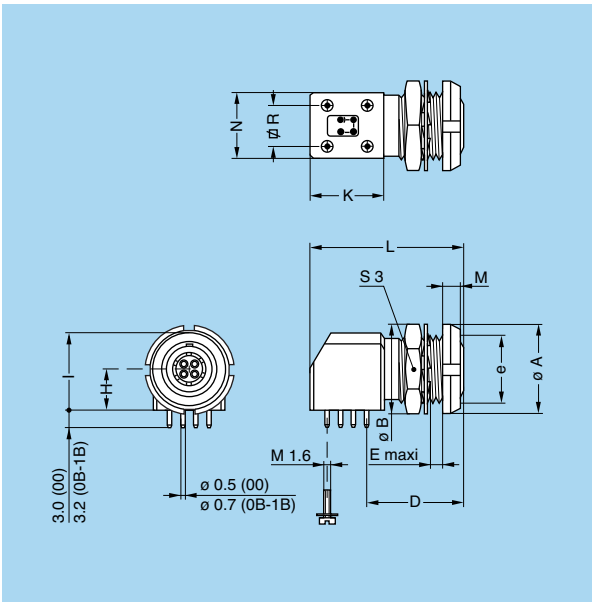

Part number	Dimensions (mm)												
	A	B	D	e	E	H	I	K	L	M	N	R	S3
XBG.00.302.HLN	10	10.2	11.5	M7x0.5	2.1	3.5	7.0	8.7	19	2.5	7.1	5.08	9
XBG.00.303.HLN													
XBG.00.304.HLN													
EXG.0B.302.HLN	12	12.4	14.6	M9x0.6	4.5	6.7	12.6	13.3	25	2.5	11.7	7.62	11
EXG.0B.303.HLN													
EXG.0B.304.HLN													
EXG.0B.305.HLN													
EXG.0B.306.HLN													
EXG.0B.307.HLN													
EXG.0B.309.HLN													
EXG.1B.302.HLN	14	15.0	16.6	M11x0.5	7.5	7.5	14.0	13.3	27	3.5	12.6	7.62	13
EXG.1B.303.HLN													
EXG.1B.304.HLN													
EXG.1B.305.HLN													
EXG.1B.306.HLN													
EXG.1B.307.HLN													
EXG.1B.308.HLN													
EXG.1B.310.HLN													

Note: In the 0B and 1B series, it is possible to replace the 4 ground pins by 4 screws (M1.6) add an «S» to the end of the part number. (e.g.: EXG.0B.307.HLNS).

P2 Panel cut-out 00, 0B series (page 179)

P10 Panel cut-out 1B series (page 179)

P18 PCB drilling pattern 00 series (page 187)

P19 PCB drilling pattern 0B, 1B series (page 187)

Plastic housing models

These connectors are particularly recommended for all applications requiring maximum electrical insulation when mated. The design, including a latch sleeve and a metal earthing crown, guarantees EMC screening efficiency to meet most requirements.

Technical Characteristics

Mechanical and Climatical

Characteristics	Value			Standard
	PEEK	PSU	PPSU	
Colour	natural (beige)	white or grey	cream	–
Endurance	> 5000 cycles	> 5000 cycles	> 5000 cycles	IEC 60512-5 test 9a
Humidity	up to 95% at 60° C			–
Temperature range	- 50° C/+ 250° C	- 50° C/+ 150° C	- 50° C/+ 180° C	–
Sterilization resistance[1)]	> 200 cycles	~20 cycles	> 100 cycles	IEC 60601-1 § 44.7
Resistance to solvents	very good	limited	good	–

Note: [1)] Steam sterilization

FGG Straight plug, key (G or J), cable collet, PEEK outer shell



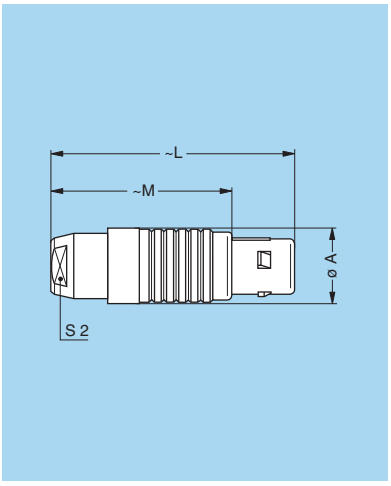

Reference		Dimensions (mm)			
Model	Series	A	L	M	S2
FGG	**1B**	13.5	43.0	32.0	10
FGG	**3B**	19.0	62.0	47.0	15
FGG	**4B**	26.0	78.5	60.5	20

M1 Cable assembly (page 191)

FGG Straight plug, key (G or J), cable collet, PEEK outer shell and nut for fitting a bend relief [1)]



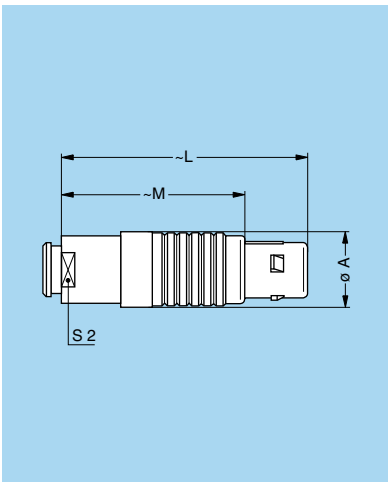

Reference		Dimensions (mm)				Note on availability
Model	Series	A	L	M	S2	
FGG	**1B**	13.5	42.2	31.2	10	for all collet type
FGG	**4B**	26.0	83.2	65.2	20	only from collet M82 and up

M1 Cable assembly (page 191)

Note: [1)] to order, add a «Z» at the end of the reference.
The bend relief must be ordered separately (see page 167).

FGY Straight plug, keys (Y), cable collet and PSU or PPSU outer shell



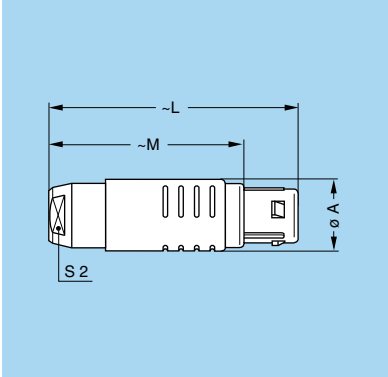

Reference		Dimensions (mm)			
Model	Series	A	L	M	S2
FGY	**2B**	16.5	50.5	39.5	13
FGY	**3B**	19.0	58.0	43.0	15
FGY	**4B**	26.0	76.2	58.2	20

M1 Cable assembly (page 191)

FGY Straight plug, keys (Y), cable collet and PSU or PPSU outer shell and nut for fitting a bend relief [1)]



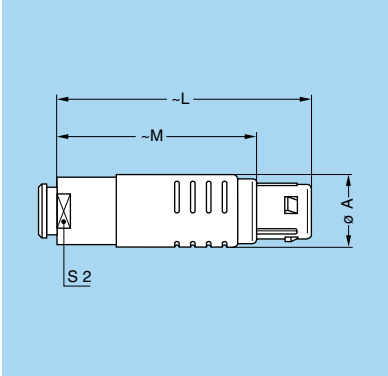

Reference		Dimensions (mm)				Note on availability
Model	Series	A	L	M	S2	
FGY	**2B**	16.5	49.5	38.5	13	only for collet M42 and up
FGY	**3B**	19.0	56.5	41.5	15	only for collet D62 and up
FGY	**4B**	26.0	74.4	56.4	20	only for collet D82 and up

M1 Cable assembly (page 191)

Note: [1)] to order, add a «Z» at the end of the reference.
The bend relief must be ordered separately (see page 167).

ENG Fixed socket with earthing tag, nut fixing, key (G or J), PEEK outer shell



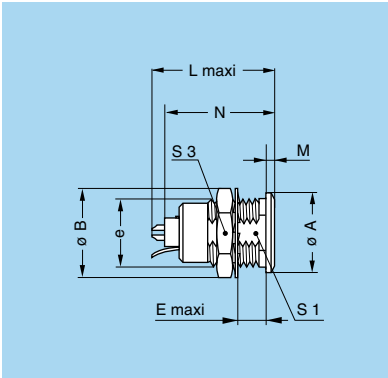

Reference		Dimensions (mm)								
Model	Series	A	B	e	E	L	M	N[1)]	S1	S3
ENG	**1B**	14	15.8	M12x1.0	7.5	23.0	1.5	21.1	10.5	14
ENG	**3B**	22	25.0	M18x1.0	11.5	30.7	2.0	28.1	16.5	22
ENG	**4B**	28	34.0	M25x1.0	12.0	35.7	2.5	32.6	23.5	30

P1 Panel cut-out (page 179)

Note: [1)] maximum length with crimp contacts.

ENY Fixed socket with earthing tag, nut fixing, keys (Y), PSU or PPSU outer shell



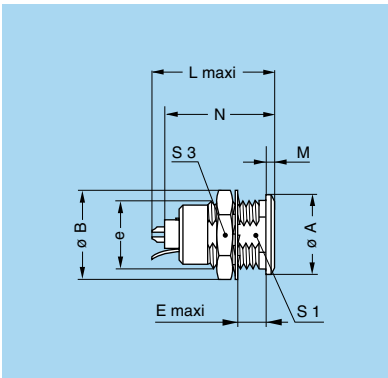

Reference		Dimensions (mm)								
Model	Series	A	B	e	E	L	M	N[1)]	S1	S3
ENY	**2B**	18	19.2	M15x1.0	8.5	26.7	1.8	24.6	13.5	17
ENY	**3B**	22	25.0	M18x1.0	11.5	30.7	2.0	28.1	16.5	22
ENY	**4B**	28	34.0	M25x1.0	12.0	35.7	2.5	32.6	23.5	30

P1 Panel cut-out (page 179)

Note: [1)] maximum length with crimp contacts.

Other models with plastic outer shell are available on request.

Watertight or vacuumtight models

These plug, socket and coupler models allow the device on which they are fitted to reach a protection index of IP68 as per IEC 60529. They are fully compatible with plugs of the same series and are widely used for portable radios, military, laboratory equipment, aviation, etc.
These models are identified by a letter «P» at the end of the reference.
Most of these models are also available in a vacuumtight version. Such models are identified by an additional letter «V» at the end of the part number (certificate on request).
Epoxy resin is used to seal these models.

Technical Characteristics

Mechanical and Climatical

Characteristics		Value	Standard
Endurance		> 5000 cycles	IEC 60512-5 test 9a
Humidity		up to 95% at 60° C	
Temperature range	00 to 1B	- 20° C/+ 100° C	
	2B to 5B	- 20° C/+ 80° C	
Salt spray corrosion test		> 1000h	IEC 60512-6 test 11f
Climatical category		20/80/21	IEC 60068-1
Leakage rate (He)[1)]		< 10^{-7} mbar.l.s^{-1}	IEC 60512-7 test 14b

Note: [1)] only for vacuumtight models.

Characteristics		Value	Standard
Maximum operating pressure[2)]	00	60 bar	IEC 60512-7 test 14d
	0B	60 bar	IEC 60512-7 test 14d
	1B	60 bar	IEC 60512-7 test 14d
	2B	40 bar	IEC 60512-7 test 14d
	3B	30 bar	IEC 60512-7 test 14d
	4B	15 bar	IEC 60512-7 test 14d
	5B	5 bar	IEC 60512-7 test 14d

Note: [2)] this value corresponds to the maximum allowed pressure difference for the assembled socket.

YHG Fixed plug, nut fixing, non-latching, key (G) or keys (A…M)



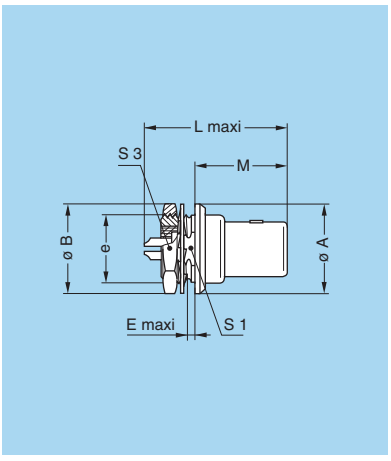

Reference		Dimensions (mm)							
Model	Series	A	B	e	E	L	M	S1	S3
YHG	**0B**	13	12.4	M9x0.6	2.4	24.1	14.2	8.2	11
YHG	**1B**	16	15.8	M12x1.0	3.9	28.0	16.2	10.5	14
YHG	**2B**	19	19.2	M15x1.0	5.5	33.1	17.8	13.5	17
YHG	**3B**	22	25.0	M18x1.0	5.1	38.2	22.2	16.5	22

P9 Panel cut-out (page 179)

Note: this model does not include an O-ring behind the flange, it ensures only IP61 protection index. Consequently, it is not vacuumtight. Watertightness (when mated) is only ensured with HHG and HCG sockets.

HGG Fixed socket, nut fixing, key (G) or keys (A…M and R), watertight or vacuumtight



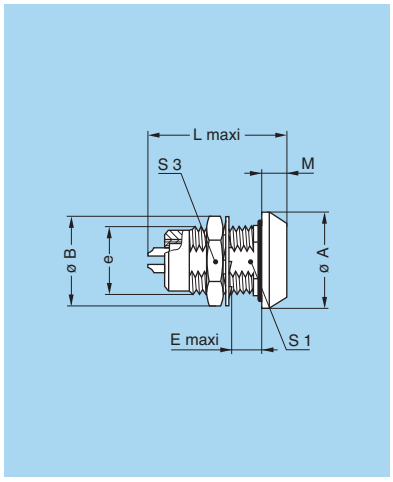

Reference		Dimensions (mm)							
Model	Series	A	B	e	E	L	M	S1	S3
HGG	**00**	11	10.2	M7x0.5	8.0	18.0	1.5	–	9
HGG	**0B**	13	12.4	M9x0.6	7.0	21.5	3.0	8.2	11
HGG	**1B**	18	15.8	M12x1.0	7.0	26.6	4.5	10.5	14
HGG	**2B**	20	19.2	M15x1.0	8.0	31.6	4.0	13.5	17
HGG	**3B**	25	25.0	M18x1.0	11.5	36.1	4.0	16.5	22
HGG	**4B**	34	34.0	M25x1.0	11.0	43.1	4.0	23.5	30
HGG	**5B**	45	40.0	M35x1.0	11.0	53.6	5.0	33.5	–

P9 Panel cut-out (page 179)

Note: the 5B series is delivered with a tapered washer and a round nut.

HNG Fixed socket, nut fixing, with earthing tag, key (G) or keys (A…M), watertight or vacuumtight



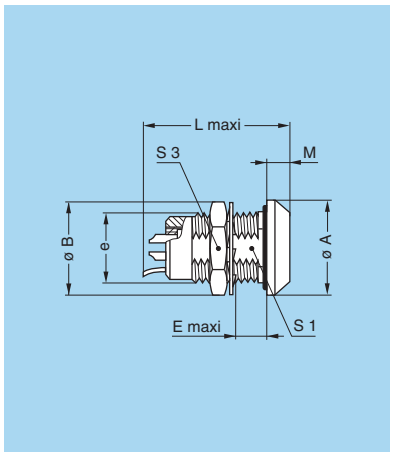

Reference		Dimensions (mm)							
Model	Series	A	B	e	E	L	M	S1	S3
HNG	**0B**	13	12.4	M9x0.6	7	21.5	3	8.2	11

P9 Panel cut-out (page 179)

HHG Fixed socket, nut fixing, key (G) or keys (A…M), watertight or vacuumtight (watertight when mated)



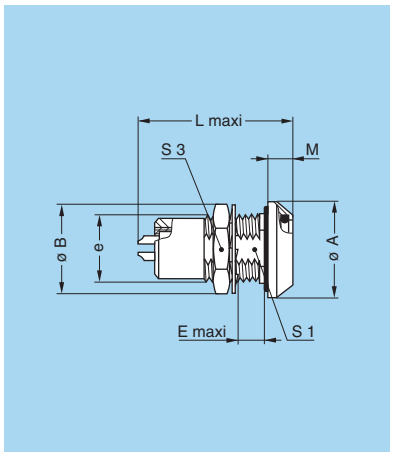

Reference		Dimensions (mm)							
Model	Series	A	B	e	E	L	M	S1	S3
HHG	**0B**	13	12.4	M9x0.6	7.0	24.5	4.8	8.2	11
HHG	**1B**	18	15.8	M12x1.0	7.0	30.3	5.2	10.5	14
HHG	**2B**	22	19.2	M15x1.0	8.0	35.6	6.0	13.5	17
HHG	**3B**	25	25.0	M18x1.0	11.5	41.3	7.2	16.5	22

P9 Panel cut-out (page 179)

Note: this model ensures watertightness (IP66) in the mating area when mated with FGG or similar plug.

HCG Fixed socket, nut fixing, key (G) or keys (A…M), watertight or vacuumtight (watertight when mated) (back panel mounting)



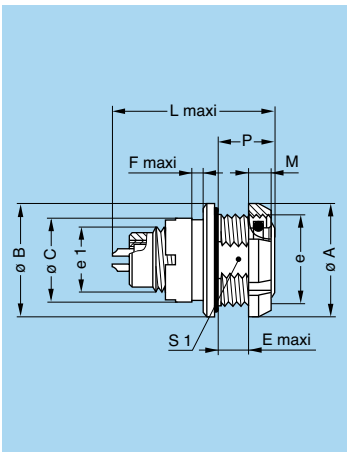

Reference		Dimensions (mm)										
Model	Series	A	B	C	e	e1	E	F	L	M	P	S1
HCG	0B	18	18	12.0	M14x1.0	M9x0.6	3.9	1.0	24.5	3.5	7.5	12.5
HCG	1B	20	20	14.5	M16x1.0	M12x1.0	6.2	2.0	30.3	3.5	10.0	14.5
HCG	2B	24	24	17.5	M19x1.0	M14x1.0	6.7	1.5	35.6	3.5	11.3	17.0

P3 Panel cut-out (page 179)

Note: this model ensures watertightness (IP66) in the mating area when mated with FGG or similar plug.

HEG Fixed socket, nut fixing, key (G) or keys (A…M), watertight or vacuumtight (back panel mounting)



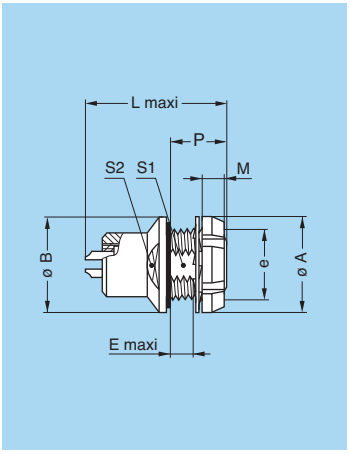

Reference		Dimensions (mm)							
Model	Series	A	B	e	E	L	M	P	S1	S2
HEG	00	10	11	M7x0.5	2.5	18.2	2.5	6.0	6.3	–
HEG	0B	12	13	M9x0.6	5.5	21.5	2.5	9.0	8.2	–
HEG	1B	16	18	M12x1.0	6.5	26.6	3.5	11.0	10.5	–
HEG	2B	20	20	M15x1.0	5.0	31.6	3.5	9.6	13.5	15

P9 Panel cut-out (page 179)

HMG Fixed socket with earthing tag, nut fixing, key (G) or keys (A…M), watertight or vacuumtight (back panel mounting)



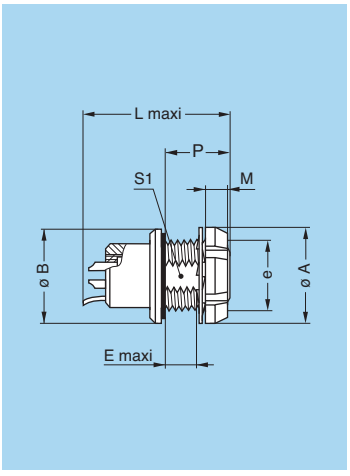

Reference		Dimensions (mm)							
Model	Series	A	B	e	E	L	M	P	S1
HMG	00	10	11	M7x0.5	2.5	18.0	2.5	6.0	6.3
HMG	0B	12	13	M9x0.6	5.5	21.5	2.5	9.0	8.2
HMG	1B	16	18	M12x1.0	5.5	26.6	3.5	11.0	10.5
HMG	2B[1)]	20	20	M15x1.0	5.5	31.6	3.5	9.6	13.5
HMG	3B	24	25	M18x1.0	7.5	36.1	4.5	14.0	16.5

P9 Panel cut-out (page 179)

Note: [1)] the surface design of the 2B series is different.

Note: The 3B series is delivered with a conical nut.

S●● Fixed coupler, nut fixing, key (G) or keys (A, B, J, K and L) at the flange end and key (G) or keys (A, B, J, K and L) at the other end, watertight or vacuumtight

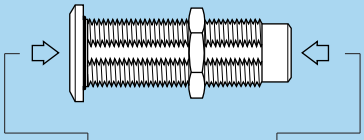

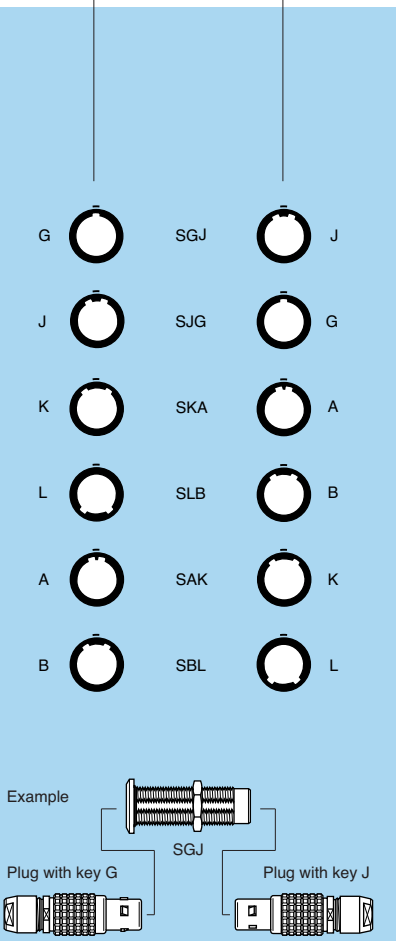

Alignment key see page 36.



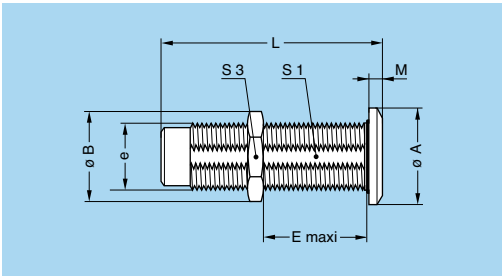

Reference		Contacts	Dimensions (mm)							
Model	Series	Type	A	B	e	E	L	M	S1	S3
SGJ	**0B**	female – male	14	13.8	M10x0.75	17	34	2.0	9.0	12
SJG	**0B**	male – female	14	13.8	M10x0.75	17	34	2.0	9.0	12
SGJ	**1B**	female – male	17	15.8	M12x1.00	28	39	2.5	10.5	14
SJG	**1B**	male – female	17	15.8	M12x1.00	28	39	2.5	10.5	14
SGJ	**2B**	female – male	20	21.5	M16x1.00	25	44	4.0	15.0	19
SJG	**2B**	male – female	20	21.5	M16x1.00	25	44	4.0	15.0	19
SGJ	**3B**	female – male	25	27.0	M20x1.00	30	53	4.0	18.5	24
SJG	**3B**	male – female	25	27.0	M20x1.00	30	53	4.0	18.5	24
SAK	**3B**	female – male	25	27.0	M20x1.00	30	53	4.0	18.5	24
SBL	**3B**	female – male	25	27.0	M20x1.00	30	53	4.0	18.5	24
SAK	**4B**	female – male	34	34.0	M25x1.00	50	65	4.0	23.5	30
SBL	**4B**	female – male	34	34.0	M25x1.00	50	65	4.0	23.5	30
SGJ	**4B**	female – male	34	34.0	M25x1.00	50	65	4.0	23.5	30
SJG	**4B**	male – female	34	34.0	M25x1.00	50	65	4.0	23.5	30
SGJ	**5B**	female – male	45	40.0	M35x1.00	58	80	5.0	33.5	–
SJG	**5B**	male – female	45	40.0	M35x1.00	58	80	5.0	33.5	–
SKA	**5B**	male – female	45	40.0	M35x1.00	58	80	5.0	33.5	–
SLB	**5B**	male – female	45	40.0	M35x1.00	58	80	5.0	33.5	–
SAK	**5B**	female – male	45	40.0	M35x1.00	58	80	5.0	33.5	–
SBL	**5B**	female – male	45	40.0	M35x1.00	58	80	5.0	33.5	–

P4 Panel cut-out (page 179)

P9 Panel cut-out 1B series (page 179)

Note: The 5B series is delivered with a round nut.

Note: for this fixed coupler, the first contact type mentioned is always the one at the flange end. On request these couplers can be produced in other series, with other keys.

Bridge models

Technical Characteristics

Mechanical and Climatical

Characteristics	Value	Standard
Endurance	> 1000 cycles	IEC 60512-5 test 9a
Working temperature	maximum 90° C	

Materials and Treatment

Component	Material	Surface treat. (µm) Cu	Ni	Cr	Au
Plastic housing	Polyamide	–			
Metallic parts	Brass	0.5	3	–	–
	Brass	0.5	3	0.3	–
Insulator	PEEK	–			
Male contact	Brass	0.5	3	–	1.0
Female contact	Bronze	0.5	3	–	1.5

Note: the surface treatment standards are as follows:
– Nickel: SAE AMS QQ N 290, chrome: SAE AMS 2460, gold: ISO 27874

Note: the last letter of the part number indicates the colour of the housing. Ex. G (standard) is grey. To obtain another colour, replace this letter by the letter corresponding to the selected colour (see table on page 72).

Electrical

Characteristics	Value	Standard
Contact resistance	< 6 mΩ	IEC 60512-2 test 2a

Part number	Series	Audio-Mono	Audio-Stereo	Test voltage (kV rms) [1] [2]	Rated current (A)
CFF.0B.302.PLCG	0B	●	–	1.05	4
CRG.0B.302.PLEG	0B	●	–	1.05	4
CFF.0B.303.PLCG	0B	●	–	0.80	4
CRG.0B.303.PLEG	0B	●	–	0.80	4
CRG.0B.306.PLEG	0B	–	●	0.40	2
CFF.1B.303.PLCG	1B	●	–	1.25	5
CRG.1B.303.PLEG	1B	●	–	1.25	5
CFF.1B.306.PLCG	1B	–	●	0.80	3
CRG.1B.306.PLEG	1B	–	●	0.80	3

Note:
[1] see calculation method, caution and suggested standard on page 213.
[2] lowest measured value; contact to contact or contact to shell.

CFF Bridge plug with two non-latching plugs

CRG Bridge plug with two non-latching plugs, and monitoring socket, key (G) or keys (A…M)

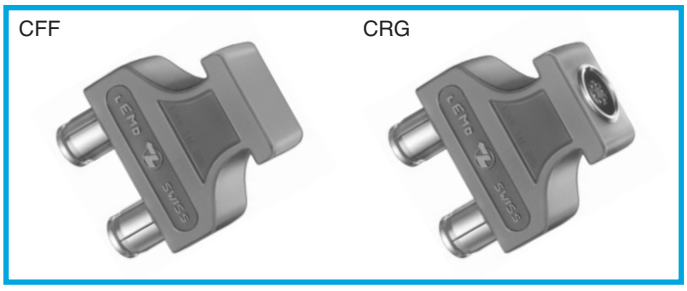

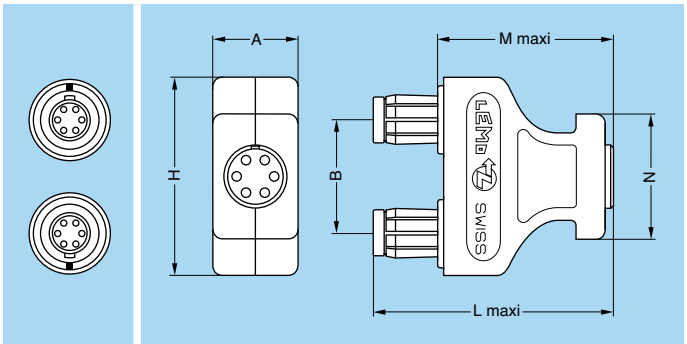

Model	Series	Dimensions (mm) A	B	H	L	M	N
CFF-CRG	**0B**	13.5	14	27.5	37.2	27.2	22.5
CFF-CRG	**1B**	15.0	20	35.0	42.0	31.0	22.0

Note: in order to provide the user with a coding system, the bridge plug housing, the double panel washers and the bend reliefs are available in nine colours.

Threaded-latching models

FVG Straight plug, key (G) or keys (B), cable collet



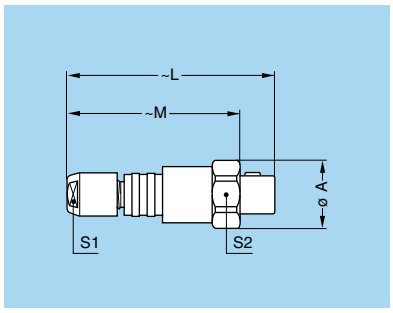

Reference		Dimensions (mm)				
Model	Series	A	L	M	S1	S2
FVG	**00**	9	28.5	24	5	8

Note: to be ordered with nut for fitting a bend relief to obtain the rating IP 64.

ESG Fixed socket with two round nuts, key (G) or keys (B), long threaded shell (back panel mounting)



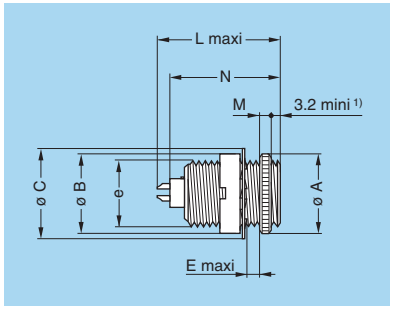

Reference		Dimensions (mm)							
Model	Series	A	B	C	e	E	L	M	N
ESG	**00**	9	9	9.5	M7x0.5	3.2	15.5	2	13.7

P2 Panel cut-out (page 179)

Note: 1) minimum length of free thread to ensure mating.

FVB Straight plug, keys (B), short shell for special cable crimping and for fitting a bend relief



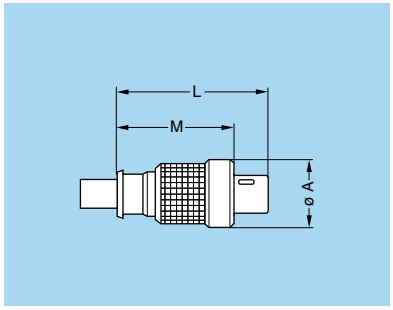

Reference		Dimensions (mm)		
Model	Series	A	L	M
FVB	**00**	9	20	15.4

Note: part number for microphone applications: FVB.00.303.NLAE24. After assembly the special bend relief GMF.00.018.D● (to be ordered separately) is to be fitted.

XRB Elbow (90°) socket for printed circuit, keys (B), short shell with one nut, screw fixing (back panel mounting)



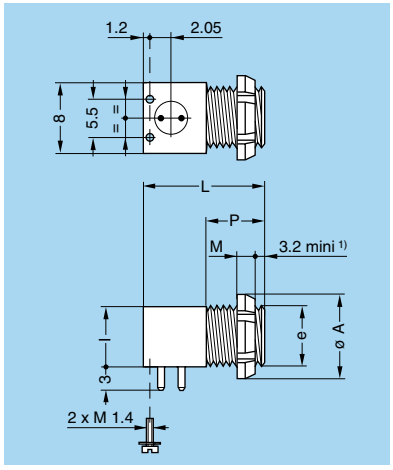

Reference		Dimensions (mm)					
Model	Series	A	e	I	L	M	P
XRB	**00**	10	M7x0.5	7	14	2.5	7

P2 Panel cut-out (page 179)

P18 PCB drilling pattern for contact only (page 187)

Note: 1) minimum length of free thread to ensure mating.

Alignment Key (B series)

Alignment Key and Polarized Keying System

B series connector model part numbers are composed of three letters. The LAST LETTER indicates the key position and the contact type (male or female).

Front view of a socket

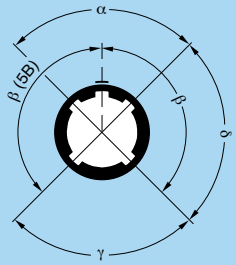

Ref.	Nb of keys	Angles	Series 00	Series 0B	Series 1B	Ref.	Nb of keys	Angles	Series XB	Series 2B	Series 3B	Series 4B	Series 5B	Contact type Plug	Contact type Socket	Note
G	1	–	0°	0°	0°	**G**	1	–	0°	0°	0°	0°	0°	male	female	●
A	2	α	30°	30°	30°	**A**	2	α	30°	30°	30°	30°	30°	male	female	●
B	2	α	60°	60°	60°	**B**	2	α	–	45°	45°	45°	45°	male	female	●
C	2	α	–	90°	90°	**C**	2	α	–	60°	60°	60°	60°	male	female	●
D	2	β	–	135°	135°	**D**	2	γ	–	95°	95°	95°	95°	male	female	○
E	2	β	–	145°	145°	**E**	2	β	120°	120°	120°	120°	120°	male	female	○
F	2	β	–	155°	155°	**F**	2	β	–	145°	145°	145°	145°	male	female	○
J	2	γ	45°	45°	45°	**J**	2	α	–	37.5°	37.5°	37.5°	37.5°	female	male	●
K	2	γ	–	70°	70°	**K**	2	α	–	52.5°	52.5°	52.5°	52.5°	female	male	○
L	2	γ	–	80°	80°	**L**	2	γ	–	70°	70°	70°	70°	female	male	○
M	2	δ	–	110°	–	**M**	2	–	–	–	–	–	–	female	male	○
Y	3	–	–	–	–	**Y**	3	β	–	112.5°	126°	112.5°	–	male	female	●[1)]
	3	–	–	–	–		3	γ	–	100°	102°	147.5°	–	male	female	●[1)]

Front view of a socket

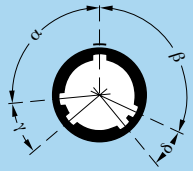

Ref.	Nb of keys	Angles	Series 00	Series 0B	Series 1B	Ref.	Nb of keys	Angles	Series XB	Series 2B	Series 3B	Series 4B	Series 5B	Contact type Plug	Contact type Socket	Note
R	5	α	–	–	–	**R**	5	α	–	–	–	–	95°	male	female	●
	5	β	–	–	–		5	β	–	–	–	–	115°	male	female	●
	5	γ	–	–	–		5	γ	–	–	–	–	20°	male	female	●
	5	δ	–	–	–		5	δ	–	–	–	–	30°	male	female	●

Note: FTG, FGY, ENY models are not available with all the keys. Please consult pages corresponding to these models.
For R●● models see explanation on page 24 and for S●● models see explanation on page 33.

Note: 1) only FGY and ENY models are available.

● First choice alternative
○ Special order alternative

K Series

K series connectors have been specifically designed for outdoor applications.
They include an inner sleeve and two seals to prevent penetration of solids or liquids into the housing formed by the plug, free socket, fixed socket or coupler. All models of this series are watertight when mated to give a protection index of IP68 as per IEC 60529 standard (in mated condition) when correctly assembled to an appropriate cable (IP66 otherwise).
K series connectors have the same insulators as the B series and have the following main features:

- security of the Push-Pull latching system
- multipole types 2 to 64 contacts
- keying system («G» key standard) for connector alignment
- 360° screening for full EMC shielding
- rugged housing for extreme working conditions.
- watertight connection (IP 68/IP 66)
- solder, crimp or print (straight or elbow) contacts
- multiple key options to avoid cross mating of similar connectors
- high packing density for space savings

Metal housing models (page 39)

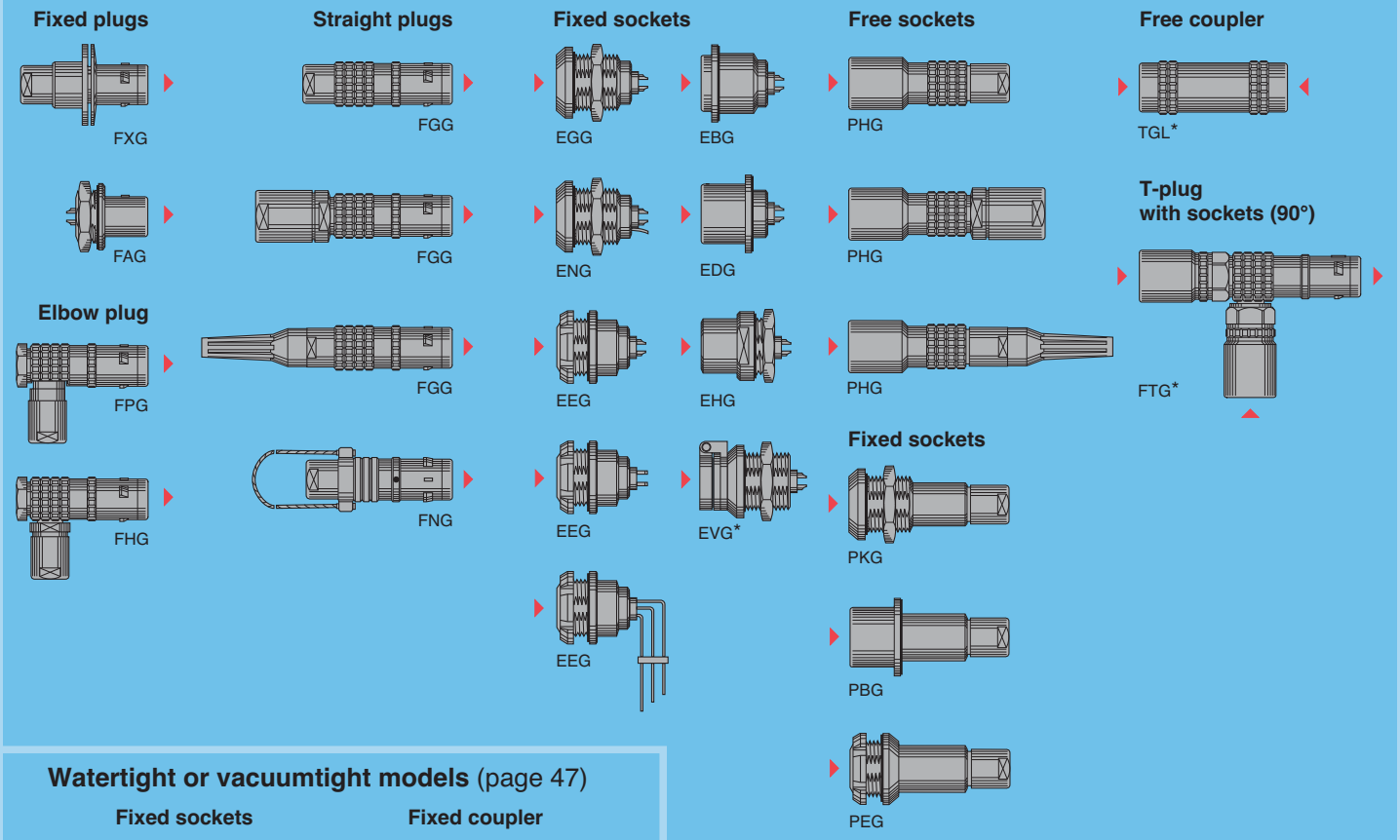

Watertight or vacuumtight models (page 47)

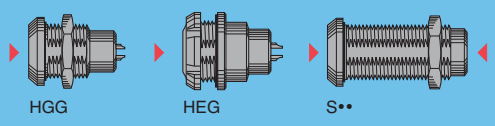

Note: * Contact LEMO for details.

Part Numbering System

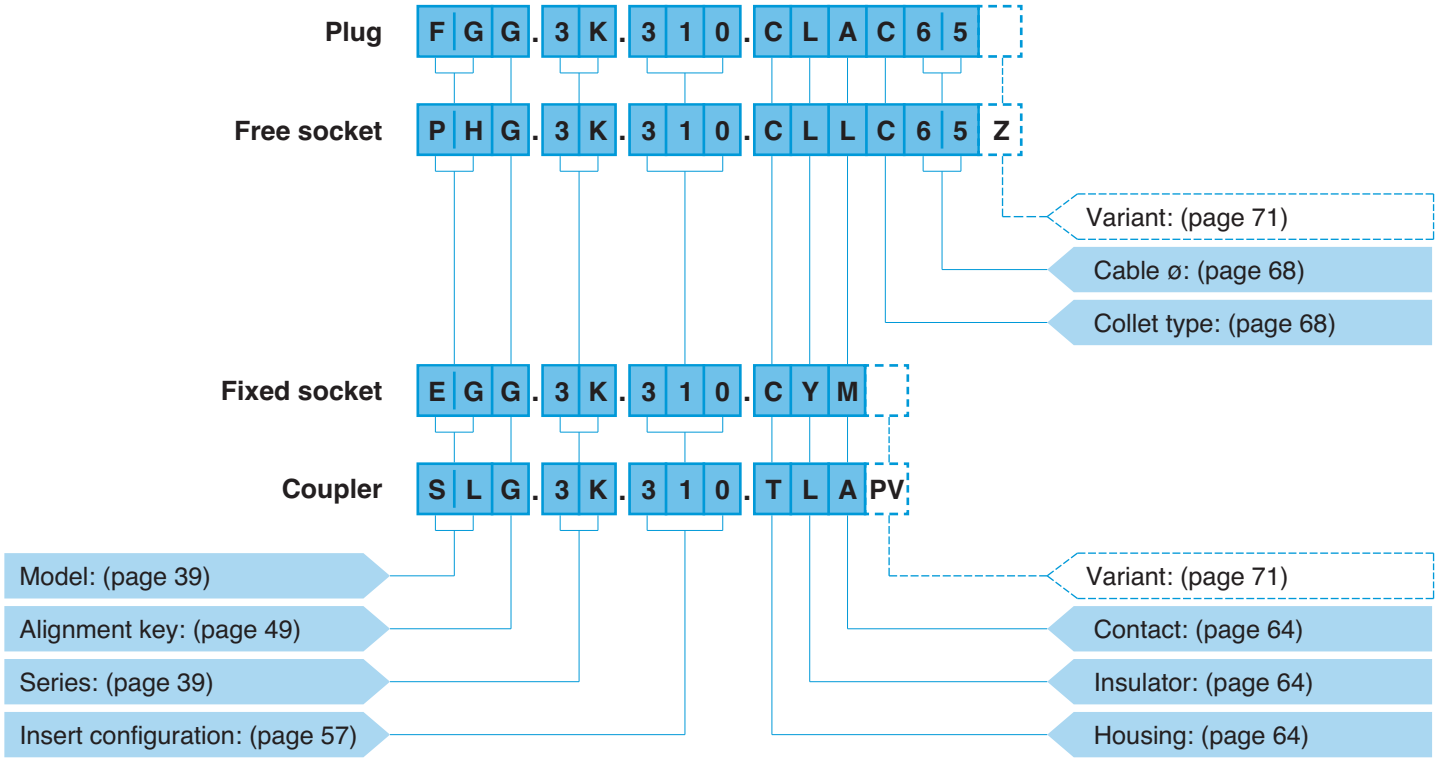

FGG.3K.310.CLAC65 = straight plug with key (G) and cable collet, 3K series, multipole type with 10 contacts, outer shell in chrome-plated brass, PEEK insulator, male solder contacts, C type collet for 6.5 mm diameter cable.

PHG.3K.310.CLLC65Z = free socket with key (G) and cable collet, 3K series, multipole type with 10 contacts, outer shell in chrome-plated brass, PEEK insulator, female solder contacts, C type collet for 6.5 mm diameter cable and nut for fitting a bend relief.

EGG.3K.310.CYM = fixed socket, nut fixing, with key (G), 3K series, multipole type with 10 contacts, outer shell in chrome-plated brass, PEEK extended insulator, female crimp contacts.

SLG.3K.310.TLAPV = fixed coupler, nut fixing, keys (L) on the flange end and key (G) at the other end, 3K series, multipole type with 10 contacts, outer shell in stainless steel, PEEK insulator, male-female contacts, vacuumtight.

Part Section Showing Internal Components

Fixed socket

1. outer shell
2. earthing crown
3. retaining ring
4. hexagonal nut
5. insulator
6. female contact
7. o-ring

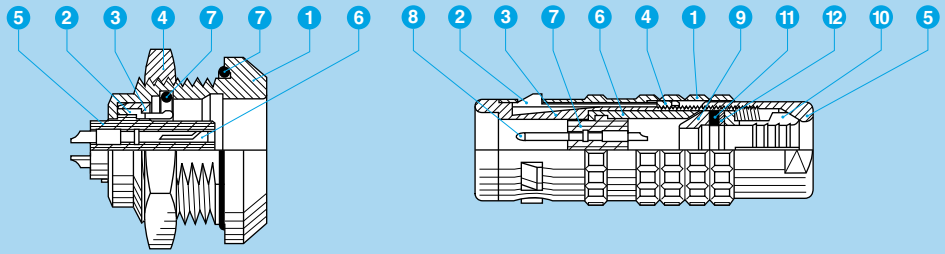

Straight plug

1. outer shell
2. latch sleeve
3. inner shell
4. retaining ring
5. collet nut
6. split insert carrier
7. insulator
8. male contact
9. earthing cone
10. collet
11. gasket
12. washer

Metal housing models

Technical Characteristics

Mechanical and Climatical

Characteristics	Value	Standard
Endurance	> 5000 cycles	IEC 60512-5 test 9a
Humidity	up to 95% at 60° C	
Temperature range[1)]	- 55° C, + 200° C	
Resistance to vibrations	10-2000 Hz, 15g	IEC 60512-4 test 6d
Shock resistance	100 g, 6 ms	IEC 60512-4 test 6c
Salt spray corrosion test	> 1000h	IEC 60512-6 test 11f
Protection index (mated)[2)]	IP 68/IP 66	IEC 60529
Climatical category	50/175/21	IEC 60068-1

Electrical

Characteristics		Value	Standard
Shielding efficiency	at 10 MHz	> 95 dB	IEC 60169-1-3
	at 1 GHz	> 80 dB	IEC 60169-1-3

Note:
the various tests have been carried out with FGG and EGG connector pairs, with chrome-plated brass shell, PEEK insulator and silicone O-ring. Detailed electrical characteristics, as well as materials and treatment are presented in the chapter Technical Characteristics on page 213.

1) minimum operating temperature is -20°C for sockets fitted with an FPM (Viton®) O-ring.

2) IP68 achieved providing that the cable is perfectly circular and that assembly process ensures a high integrity seal.

FGG Straight plug, key (G) or keys (A to F, L and R), cable collet



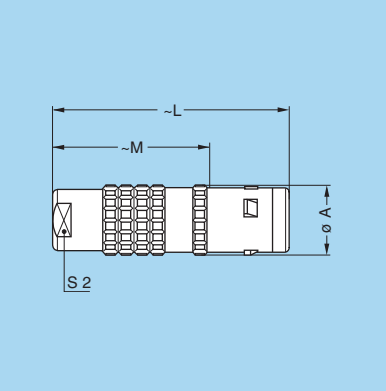

Reference		Dimensions (mm)			
Model	Series	A	L	M	S2
FGG	0K	11	34	23.0	8
FGG	1K	13	42	28.0	9
FGG	2K	16	52	36.0	12
FGG	3K	19	61	41.0	15
FGG	4K	25	71	50.5	19
FGG	5K	38	92	67.0	30

M1 Cable assembly (page 194)

FGG Straight plug, key (G) or keys (A to F, L and R), cable collet and oversize cable collet [1)]



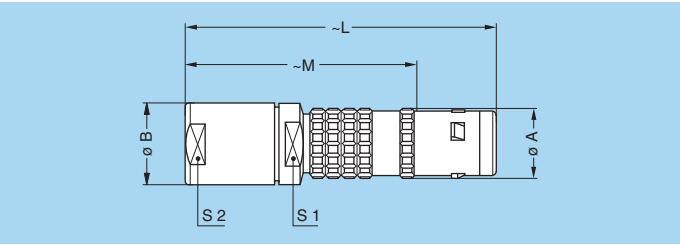

Reference		Dimensions (mm)					
Model	Series	A	B	L	M	S1	S2
FGG	1K	13	14.5	60.0	46	12	12
FGG	2K	16	17.0	68.0	52	15	15
FGG	3K	19	22.0	85.0	65	19	19
FGG	4K	25	36.0	119.5	99	30	32

M2 Cable assembly (page 195)

Note: 1) correspond to K type of collet, the fitting of oversize collets onto this model allows them to be fitted to the cables that can be accommodated by the next housing size up (see page 68).

FGG Straight plug, key (G) or keys (A to F, L and R),cable collet and nut for fitting a bend relief [1)]



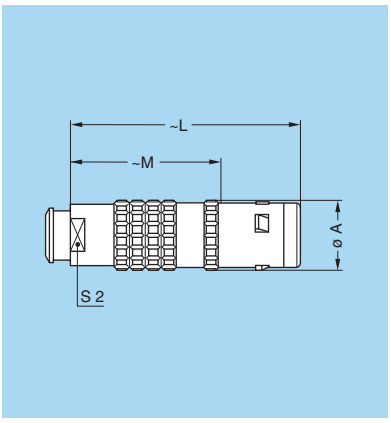

Reference		Dimensions (mm)			
Model	Series	A	L	M	S2
FGG	**0K**	11	34	23.0	7
FGG	**1K**	13	42	28.0	9
FGG	**2K**	16	52	36.0	12
FGG	**3K**	19	60	40.0	15
FGG	**4K**	25	71	50.5	19

M1 Cable assembly (page 194)

Note: [1)] to order, add a «Z» at the end of the reference.
The bend relief must be ordered separately (see page 167).

FNG Straight plug, key (G) or keys (A to F and L), cable collet and lanyard release

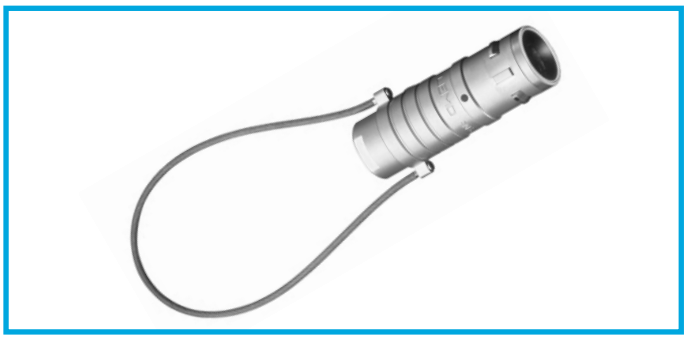

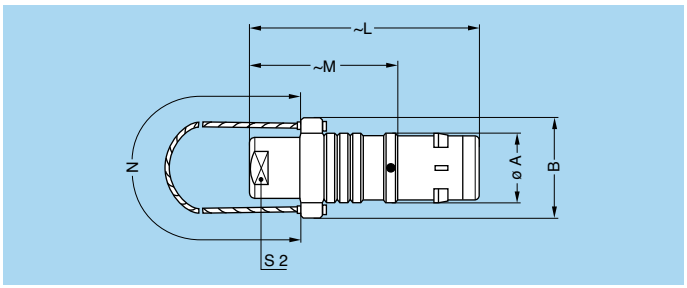

Reference		Dimensions (mm)					
Model	Series	A	B	L	M	N	S2
FNG	**2K**	16	22	52	36.0	160	12
FNG	**4K**	25	32	71	50.5	230	19

M1 Cable assembly (page 194)

Note: cable material: stainless steel with Polyamide sheath

FXG Fixed plug with round flange, key (G) or keys (A to F, L and R) and screw fixing

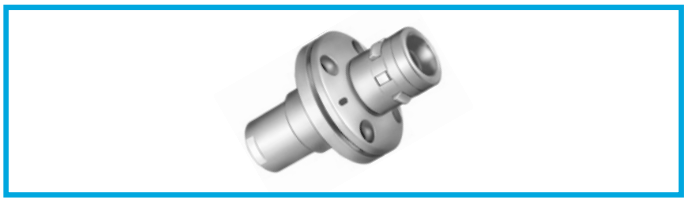

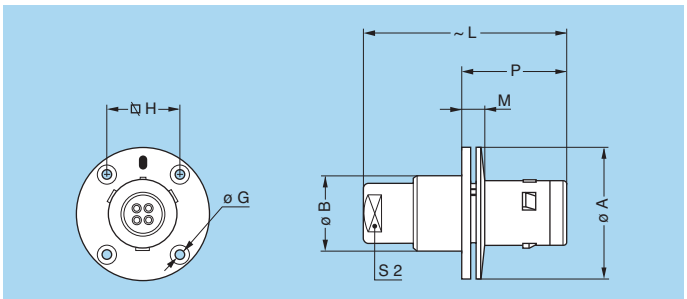

Reference		Dimensions (mm)							
Model	Series	A	B	G	H	L	M	P	S2
FXG	**3K**	38	22.5	3.4	20.6	61	10.0	30.0	15
FXG	**4K**	47	28.5	3.4	27.0	71	11.0	32.0	19
FXG	**5K**	65	42.5	4.4	38.0	100	12.5	38.5	30

P6 Panel cut-out (page 181)

Note: this model does not include an O-ring behind the flange, it allows the device on which it is fitted to reach only IP50 protection index.
It does not have a cable collet.

FAG Fixed plug, nut fixing, non-latching, key (G) or keys (A to F, L and R)



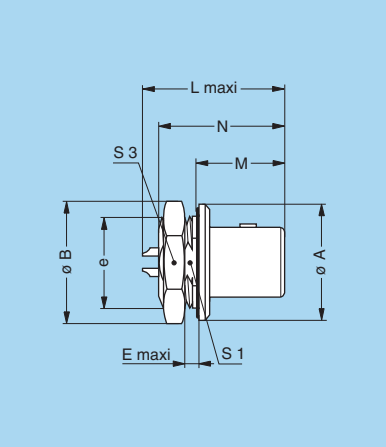

Reference		Dimensions (mm)								
Model	Series	A	B	e	E	L	M	N[1)]	S1	S3
FAG	**1K**	20	21.5	M16x1.0	2.3	22.6	16.0	22.5	14.5	19
FAG	**2K**	25	27.0	M20x1.0	4.5	33.6	18.0	28.3	18.5	24
FAG	**3K**	31	34.0	M24x1.0	4.0	34.3	22.5	33.8	22.5	30
FAG	**4K**	37	40.5	M30x1.0	4.0	35.3	23.0	36.3	28.5	36
FAG	**5K**	55	54.0	M45x1.5	4.0	43.5	28.5	42.3	42.5	–

P1 Panel cut-out (page 181)

Note: The 1K series is delivered with a locking washer.
The 5K series is delivered with a round nut.

Note: [1)] maximum length with crimp contacts.

FPG Elbow (90°) plug, key (G) or keys (A to F, L and R), cable collet



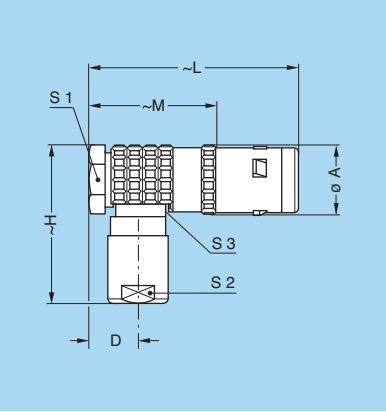

Reference		Dimensions (mm)							
Model	Series	A	D	H	L	M	S1	S2	S3
FPG	**0K**	11	7.3	25	36	25	9	8	8
FPG	**1K**	13	8.7	33	42	28	11	9	10
FPG	**2K**	16	10.2	40	51	35	14	12	13

M3 Cable assembly (page 194)

FHG Elbow (90°) plug, key (G) or keys (A to F, L and R), cable collet



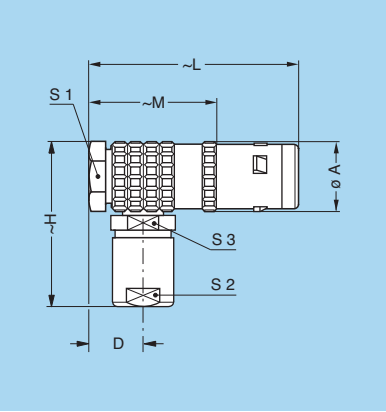

Reference		Dimensions (mm)							
Model	Series	A	D	H	L	M	S1	S2	S3
FHG	**3K**	21.0	11.5	47	60	40.0	18	15	15
FHG	**4K**	27.5	15.5	57	72	51.5	24	19	20

M3 Cable assembly (page 194)

EGG Fixed socket, nut fixing, key (G) or keys (A to F, L and R)



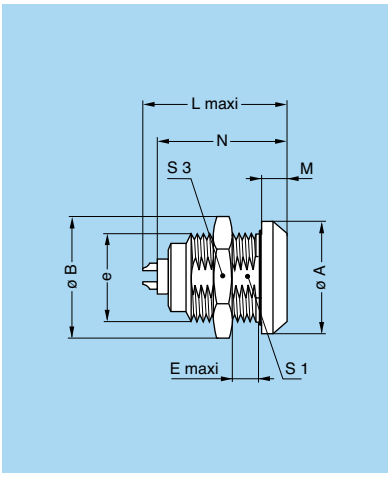

Reference		Dimensions (mm)								
Model	Series	A	B	e	E	L	M	N[1)]	S1	S3
EGG	**0K**	18	19.2	M14x1.0	6	21.7	4.0	20.1	12.5	17
EGG	**1K**	20	21.5	M16x1.0	9	27.0	4.5	25.1	14.5	19
EGG	**2K**	25	27.0	M20x1.0	9	30.7	5.0	28.6	18.5	24
EGG	**3K**	31	34.0	M24x1.0	11	36.2	6.0	33.6	22.5	30
EGG	**4K**	37	40.5	M30x1.0	9	40.2	6.5	38.6	28.5	36
EGG	**5K**	55	54.0	M45x1.5	10	47.5	9.0	43.6	42.5	–

P1 Panel cut-out (page 181)

Note: The 5K series is delivered with a round nut.

Note: [1)] maximum length with crimp contacts.

ENG Fixed socket, nut fixing, key (G) or keys (A to F, L and R) and earthing tag



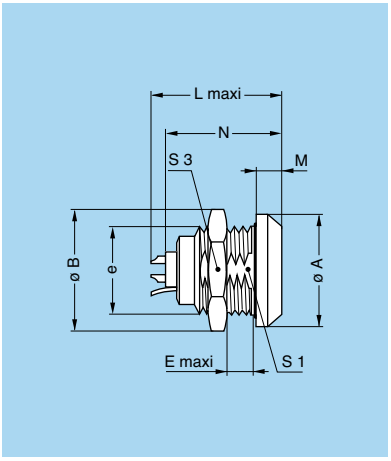

Reference		Dimensions (mm)								
Model	Series	A	B	e	E	L	M	N[1)]	S1	S3
ENG	**3K**	31	34	M24x1.0	11.3	36.2	6	33.6	22.5	30

P1 Panel cut-out (page 181)

Note: [1)] maximum length with crimp contacts.

EEG Fixed socket, nut fixing, key (G) or keys (A to F, L and R) (back panel mounting)



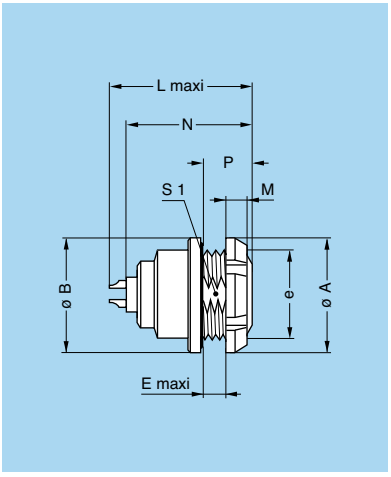

Reference		Dimensions (mm)								
Model	Series	A	B	e	E	L	M	N[1)]	P	S1
EEG	**0K**	18.0	18	M14x1.0	3.4	21.7	3.5	20.1	7.0	12.5
EEG	**1K**	20.0	20	M16x1.0	6.2	27.0	3.5	25.1	10.0	14.5
EEG	**2K**	25.0	25	M20x1.0	5.0	30.7	3.5	28.6	10.0	18.5
EEG	**3K**	30.0	31	M24x1.0	7.5	36.2	4.5	33.6	12.0	22.5
EEG	**4K**	41.5	37	M30x1.0	6.0	40.2	7.0	38.6	13.5	28.5

P1 Panel cut-out (page 181)

Note: The 3K and 4K series are delivered with a conical nut.

Note: [1)] maximum length with crimp contacts.

EEG Fixed socket, nut fixing, key (G) or keys (A to F and R) with straight print contacts for printed circuit (back panel mounting)



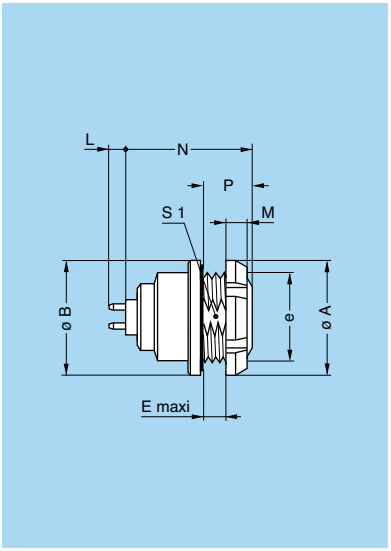

Reference		Dimensions (mm)							
Model	Series	A	B	e	E	M	N	P	S1
EEG	**0K**	18.0	18	M14x1.0	3.4	3.5	17.6	7.0	12.5
EEG	**1K**	20.0	20	M16x1.0	6.2	3.5	23.8	10.0	14.5
EEG	**2K**	25.0	25	M20x1.0	5.0	3.5	25.8	10.0	18.5
EEG	**3K**	30.0	31	M24x1.0	7.5	4.5	31.3	12.0	22.5
EEG	**4K**	41.5	37	M30x1.0	6.0	7.0	34.3	13.5	28.5

P1 Panel cut-out (page 181)

P15 PCB drilling pattern (page 182)

Note: The 3K and 4K series are delivered with a conical nut.

Note: this contact type is available for E●● socket models fitted with female contact.
Length «L» depends on the number of contacts, see table page 185.

EEG Fixed socket, nut fixing, key (G) or keys (A to F and R) with elbow (90°) contacts for printed circuit (back panel mounting)



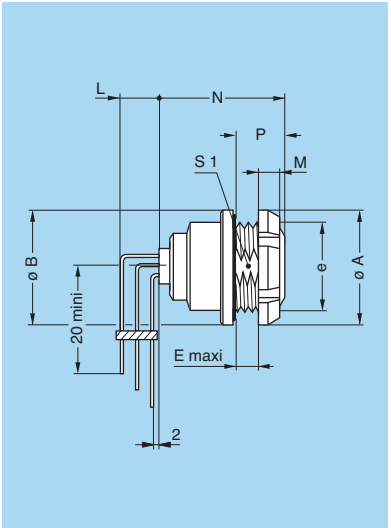

Reference		Dimensions (mm)							
Model	Series	A	B	e	E	M	N	P	S1
EEG	**0K**	18	18	M14x1.0	3.4	3.5	19.3	7	12.5
EEG	**1K**	20	20	M16x1.0	6.2	3.5	24.3	10	14.5
EEG	**2K**	25	25	M20x1.0	5.0	3.5	26.6	10	18.5
EEG	**3K**	30	31	M24x1.0	7.5	4.5	31.3	12	22.5

P1 Panel cut-out (page 181)

P17 PCB drilling pattern (page 186)

Note: length «L» depends on the number of contacts, see PCB drilling pattern page 186.

Note: The 3K series is delivered with a conical nut.

EBG Fixed socket with square flange, key (G) or keys (A to F, L and R) and screw fixing



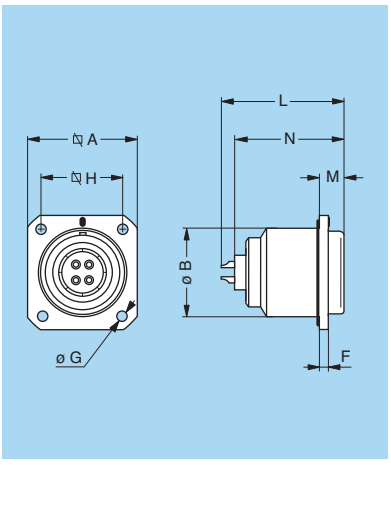

Reference		Dimensions (mm)							
Model	Series	A	B	F	G	H	L	M	N[1)]
EBG	**3K**	29	23	3	3.4	23	36.2	6.0	32.6
EBG	**4K**	37	30	3	3.4	29	40.2	6.5	36.6
EBG	**5K**	54	45	4	4.4	44	47.5	8.0	42.1

P7 Panel cut-out (page 181)

Note: [1)] maximum length with crimp contacts.

EDG Fixed socket with square flange, key (G) or keys (A to F, L and R), protruding shell and earthing tag, screw fixing



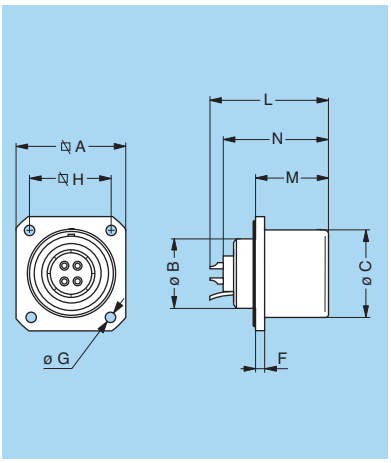

Reference		Dimensions (mm)								
Model	Series	A	B	C	F	G	H	L	M	N[1)]
EDG	**3K**	29	18	23	3	3.4	23	36.2	22.5	32.6

P7 Panel cut-out (page 181)

Note: [1)] maximum length with crimp contacts.

EHG Fixed socket, nut fixing, key (G) or keys (A to F and L), protruding shell



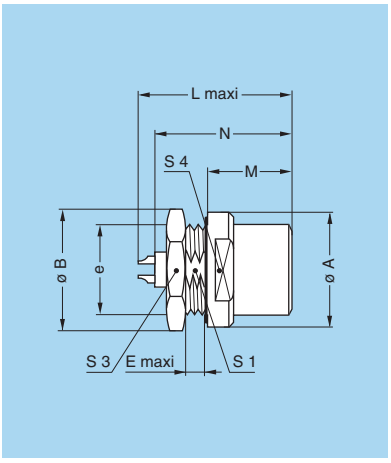

Reference		Dimensions (mm)									
Model	Series	A	B	e	E	L	M	N[1)]	S1	S3	S4
EHG	**0K**	18	19.2	M14x1.0	1.5	21.7	10.5	20.1	12.5	17	15
EHG	**1K**	20	21.5	M16x1.0	1.5	27.0	15.5	25.1	14.5	19	17
EHG	**2K**	25	27.0	M20x1.0	1.5	30.7	17.0	27.1	18.5	24	20

P1 Panel cut-out (page 181)

Note: [1)] maximum length with crimp contacts.

PHG Free socket, key (G) or keys (A to F, L and R), cable collet



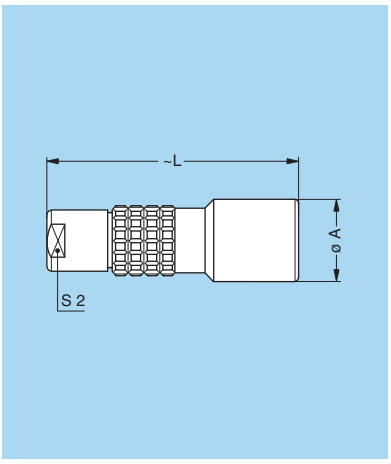

Reference		Dimensions (mm)		
Model	Series	A	L	S2
PHG	**0K**	13	34.0	8
PHG	**1K**	15	45.0	9
PHG	**2K**	19	54.0	12
PHG	**3K**	23	65.0	15
PHG	**4K**	29	75.5	19
PHG	**5K**	42	95.0	30

M1 Cable assembly (page 194)

PHG Free socket, key (G) or keys (A to F, L and R), cable collet and oversize cable collet [1)]

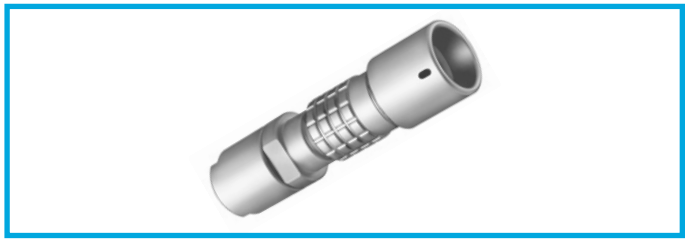

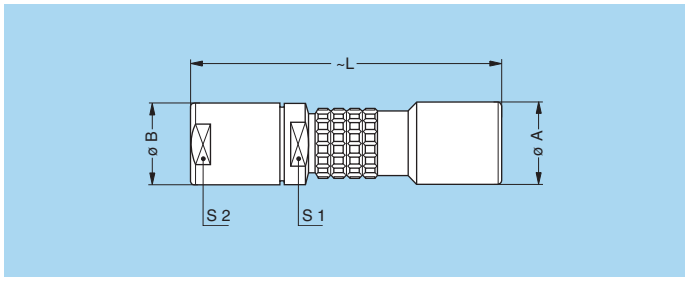

Reference		Dimensions (mm)				
Model	Series	A	B	L	S1	S2
PHG	**1K**	15	14.5	63	12	12
PHG	**2K**	19	17.0	70	15	15
PHG	**3K**	23	22.0	89	19	19
PHG	**4K**	29	36.0	124	30	32

M2 Cable assembly (page 195)

Note: [1)] correspond to K type of collet, the fitting of oversize collets onto this model allows them to be fitted to the cables that can be accommodated by the next housing size up (see page 68).

PHG Free socket, key (G) or keys (A to F, L and R), cable collet and nut for fitting a bend relief [1)]



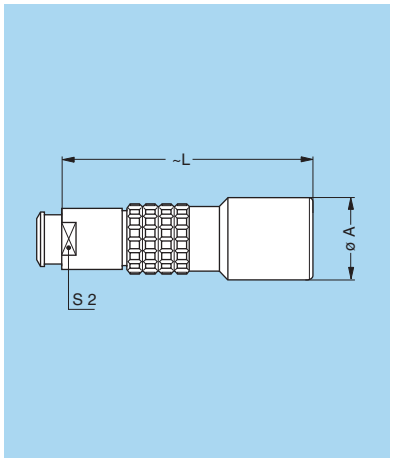

Reference		Dimensions (mm)		
Model	Series	A	L	S2
PHG	**0K**	13	34.0	7
PHG	**1K**	15	45.0	9
PHG	**2K**	19	54.0	12
PHG	**3K**	23	64.0	15
PHG	**4K**	29	75.5	19

M1 Cable assembly (page 194)

Note: [1)] to order, add a «Z» at the end of the reference.
The bend relief must be ordered separately (see page 167).

PKG Fixed socket, nut fixing, key (G) or keys (A to F, L and R), cable collet



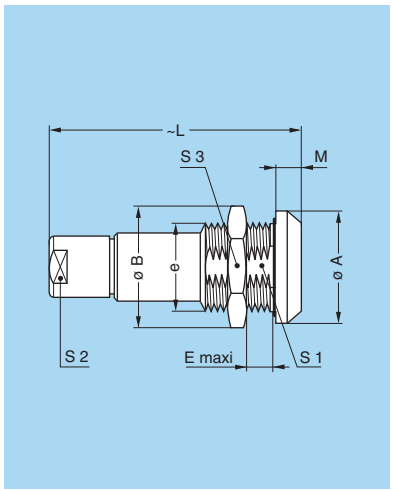

Reference		Dimensions (mm)								
Model	Series	A	B	e	E	L	M	S1	S2	S3
PKG	**0K**	18	19.2	M14x1.0	6.0	34.0	4.0	12.5	8	17
PKG	**1K**	20	21.5	M16x1.0	9.0	45.0	4.5	14.5	9	19
PKG	**2K**	25	27.0	M20x1.0	9.0	54.0	5.0	18.5	12	24
PKG	**3K**	31	34.0	M24x1.0	11.5	65.0	6.0	22.5	15	30
PKG	**4K**	37	40.5	M30x1.0	9.0	75.5	6.5	28.5	19	36
PKG	**5K**	55	54.0	M45x1.5	15.0	98.0	9.0	42.5	30	–

P1 Panel cut-out (page 181)

M1 Cable assembly (page 194)

Note: the 5K series is delivered with a round nut.

PBG Fixed socket, key (G) with square flange, cable collet and screw fixing

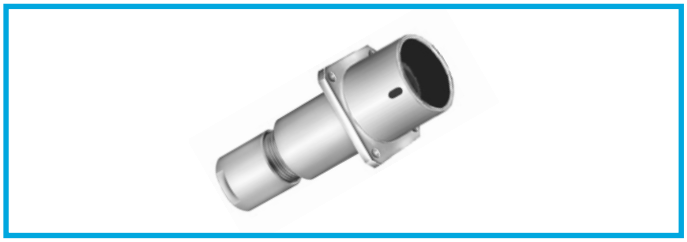

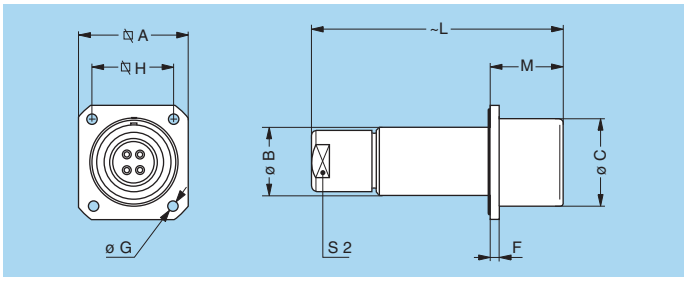

Reference		Dimensions (mm)								
Model	Series	A	B	C	F	G	H	L	M	S2
PBG	**3K**	29	19	23	3	3.4	23	65	22.5	15

P7 Panel cut-out (page 181)

M1 Cable assembly (page 194)

PEG Fixed socket, nut fixing, key (G) or keys (A to F, L and R), cable collet (back panel mounting)



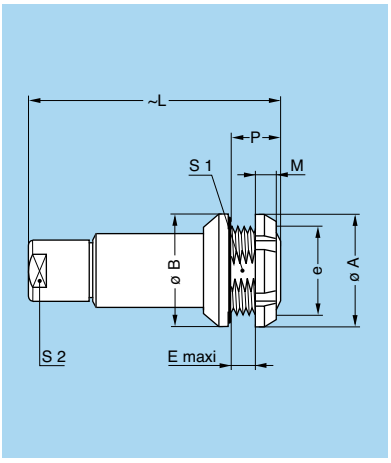

Reference		Dimensions (mm)								
Model	Series	A	B	e	E	L	M	P	S1	S2
PEG	**0K**	18	18	M14x1.0	5.0	34	3.5	8.5	12.5	8
PEG	**1K**	20	20	M16x1.0	6.5	45	3.5	10.0	14.5	9
PEG	**2K**	25	25	M20x1.0	4.0	54	3.5	7.5	18.5	12
PEG	**3K**	30	31	M24x1.0	7.5	65	4.5	12.0	22.5	15

P1 Panel cut-out (page 181)

M1 Cable assembly (page 194)

Note: the 3K series is delivered with a conical nut.

Watertight or vacuumtight models

These socket and coupler models allow the device on which they are fitted to reach a protection index of IP68 as per IEC 60529. They are fully compatible with plugs of the same series and are widely used for portable radios, military, laboratory equipment, aviation, etc.
These models are identified by a letter «P» at the end of the reference.
Most of these models are also available in a vacuumtight version. Such models are identified by an additional letter «V» at the end of the part number (certificate on request).
Epoxy resin is used to seal these models.

Technical Characteristics

Mechanical and Climatical

Characteristics		Value	Standard
Endurance		> 5000 cycles	IEC 60512-5 test 9a
Humidity		up to 95% at 60° C	
Temperature range	0K-1K	- 20° C/+ 100° C	
	2K to 5K	- 20° C/+ 80° C	
Salt spray corrosion test		> 1000h	IEC 60512-6 test 11f
Climatical category		20/80/21	IEC 60068-1
Leakage rate (He)[1)]		< 10^{-7} mbar.l.s^{-1}	IEC 60512-7 test 14b

Note: [1)] only for vacuumtight models.

Characteristics		Value	Standard
Maximum operating pressure[2)]	0K	60 bar	IEC 60512-7 test 14d
	1K	60 bar	IEC 60512-7 test 14d
	2K	40 bar	IEC 60512-7 test 14d
	3K	30 bar	IEC 60512-7 test 14d
	4K	15 bar	IEC 60512-7 test 14d
	5K	5 bar	IEC 60512-7 test 14d

Note: [2)] this value corresponds to the maximum allowed pressure difference for the assembled socket.

HGG Fixed socket, nut fixing, key (G) or keys (A to F and L), watertight or vacuumtight



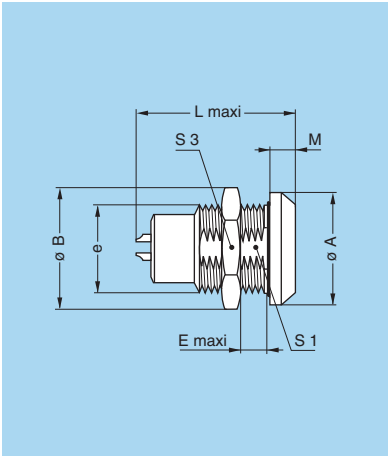

Reference		Dimensions (mm)							
Model	Series	A	B	e	E	L	M	S1	S3
HGG	0K	18	19.2	M14x1.0	5.5	23.0	4.0	12.5	17
HGG	1K	20	21.5	M16x1.0	9.0	30.0	4.5	14.5	19
HGG	2K	25	27.0	M20x1.0	13.0	33.7	5.0	18.5	24
HGG	3K	31	34.0	M24x1.0	16.0	41.7	6.0	22.5	30
HGG	4K	37	40.5	M30x1.0	14.0	49.2	6.5	28.5	36
HGG	5K	55	54.0	M45x1.5	10.0	55.7	9.0	42.5	–

P1 Panel cut-out (page 181)

Note: the 5K series is delivered with a round nut.

HEG Fixed socket, nut fixing, key (G) or keys (A to F and L), watertight or vacuumtight (back panel mounting)



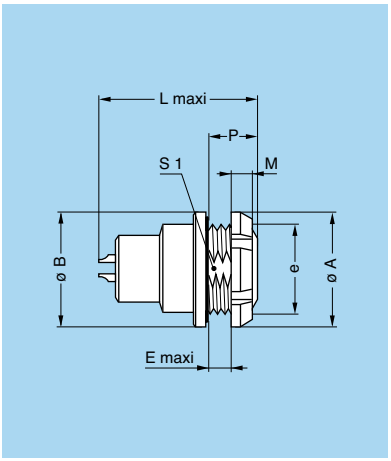

Reference		Dimensions (mm)							
Model	Series	A	B	e	E	L	M	P	S1
HEG	**0K**	18	18	M14x1.0	3.4	23.0	3.5	7	12.5
HEG	**1K**	20	20	M16x1.0	6.2	30.0	3.5	10	14.5
HEG	**2K**	25	25	M20x1.0	5.0	33.7	3.5	10	18.5

P1 Panel cut-out (page 181)

S●● Fixed coupler, nut fixing, key (G) or keys (L) at the flange end, and key (G) or keys (C or L) at the other end, watertight or vacuumtight

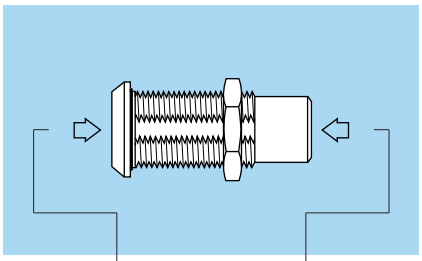

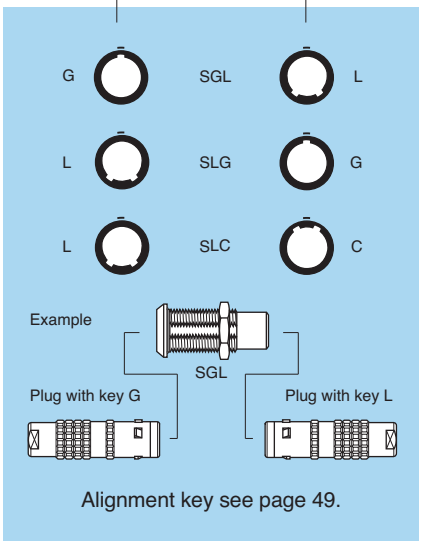

Alignment key see page 49.

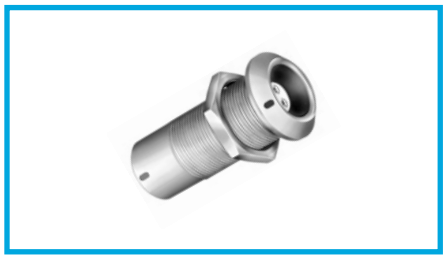

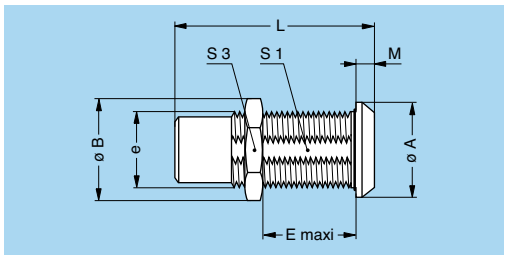

Reference		Contacts	Dimensions (mm)							
Model	Series	Type	A	B	e	E	L	M	S1	S3
SGL	**2K**	female – male	25	27.0	M20x1.0	25	52.4	5.0	18.5	24
SLG	**2K**	male – female	25	27.0	M20x1.0	25	52.4	5.0	18.5	24
SLG	**3K**	male – female	31	34.0	M24x1.0	33	64.0	6.0	22.5	30
SLG	**4K**	male – female	37	40.5	M30x1.0	48	74.0	6.5	28.5	36
SLC	**4K**	male – female	37	40.5	M30x1.0	48	74.0	6.5	28.5	36
SLG	**5K**	male – female	55	54.0	M45x1.5	58	88.0	9.0	42.5	–
SLC	**5K**	male – female	55	54.0	M45x1.5	58	88.0	9.0	42.5	–

P1 Panel cut-out (page 181)

Note: for this fixed coupler, the first contact type mentioned is always the one at the flange end. On request, these couplers can be produced in other series, with other keys.

Note: The 5K series is delivered with a round nut.

Alignment Key (K series)

Alignment Key and Polarized Keying System

K series connector model part numbers are composed of three letters. The LAST LETTER indicates the key position and the contact type (male or female).

Front view of a socket

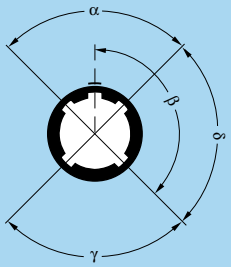

Ref.	Nb of keys	Angles	Series						Contact type		Note
			0K	1K	2K	3K	4K	5K	Plug	Socket	
G	1	–	0°	0°	0°	0°	0°	0°	male	female	●
A	2	α	30°	30°	30°	30°	30°	30°	male	female	●
B	2	α	45°	45°	45°	45°	45°	45°	male	female	●
C	2	α	60°	60°	60°	60°	60°	60°	male	female	●
D	2	γ	95°	95°	95°	95°	95°	95°	male	female	○
E	2	β	120°	120°	120°	120°	120°	120°	male	female	○
F	2	β	145°	145°	145°	145°	145°	145°	male	female	○
L	2	γ	75°	75°	75°	75°	75°	75°	female	male	●

Front view of a socket

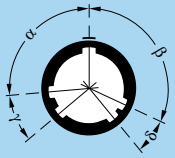

Ref.	Nb of keys	Angles	Series						Contact type		Note
			0K	1K	2K	3K	4K	5K	Plug	Socket	
R	5	α	–	–	–	95°	–	–	male	female	●
	5	β	–	–	–	115°	–	–	male	female	●
	5	γ	–	–	–	35°	–	–	male	female	●
	5	δ	–	–	–	25°	–	–	male	female	●

Note: S●● and TGL models are not available with all the keys. For S●● models see explanation on page 48.
Please consult the pages corresponding to these models.

● First choice alternative
○ Special order alternative

T Series

T series connectors have been specifically designed for outdoor applications. They include an inner sleeve and seals to prevent penetration of solids or liquids.This series is watertight when mated to give a protection index of IP68 as per IEC 60529 standard and have the following main features:

– IP68 mated
– Push-Pull self-latching system
– Mechanical key (FGG) with multiple keys to avoid cross-mating
– High packing density for space savings
– 360° shielding for full EMC shielding
– Compatible with existing B sockets
– Same mounting hole as B sockets
– Black-chrome plated brass and plastic outershell available
– Multipole types 2 to 32 contacts
– For cables 1.0 up to 10.5 mm
– Solder, crimp or print contacts

Chrome-plated housing models (page 53)

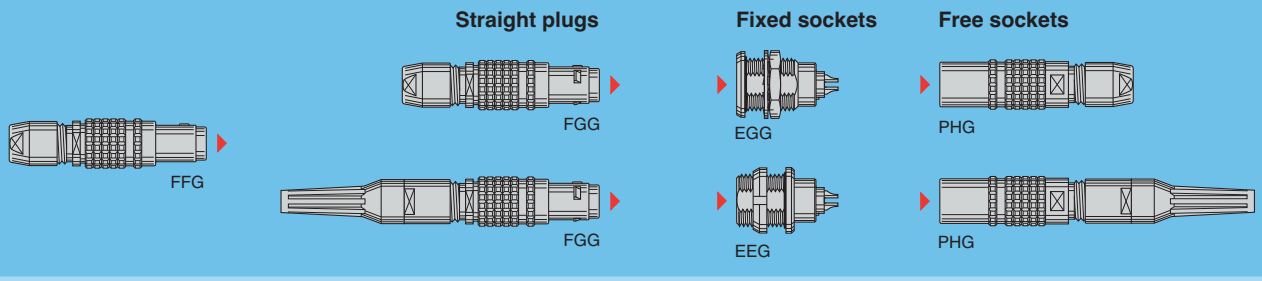

Plastic housing models (page 56)

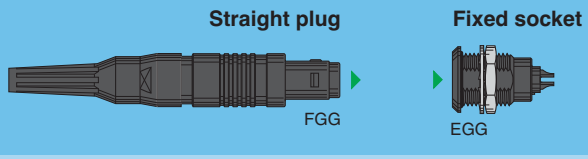

Watertight or vacuumtight models (page 55)

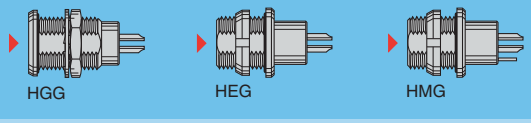

Part Numbering System

Plug and free socket

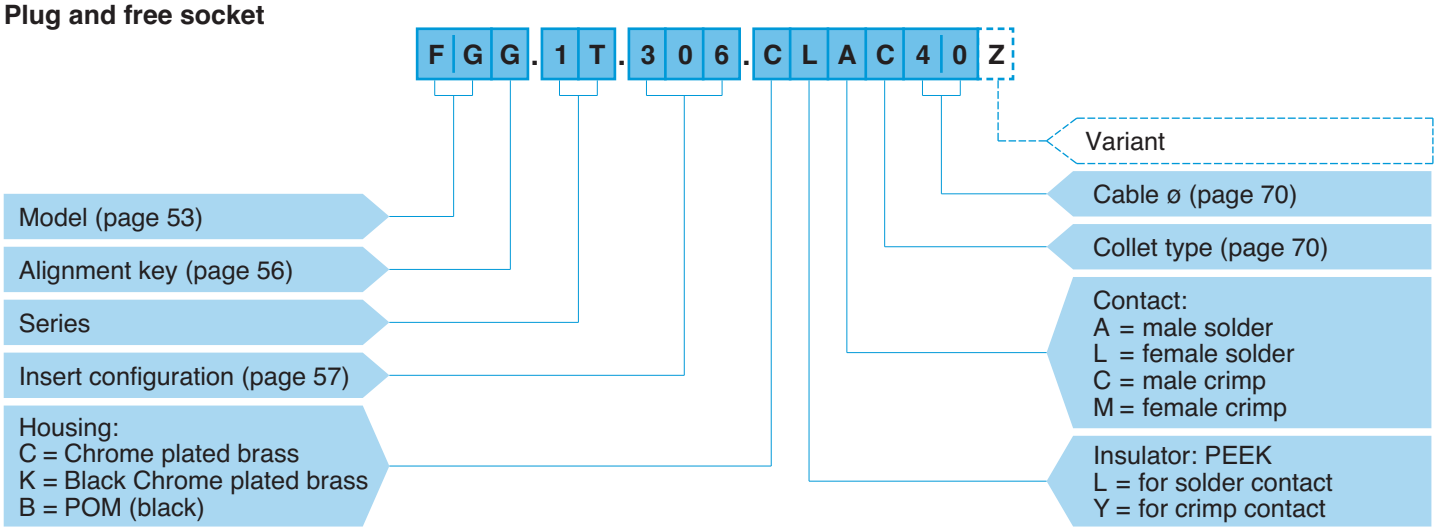

FGG.1T.306.CLAC40Z = Straight plug with key (G) and cable collet for bend relief, 1T series, multipole type with 6 contacts, outer shell in chrome-plated brass, PEEK insulator, male solder contacts, C type collet for 4.0 mm diameter cable and nut for fitting a bend relief.

Fixed socket

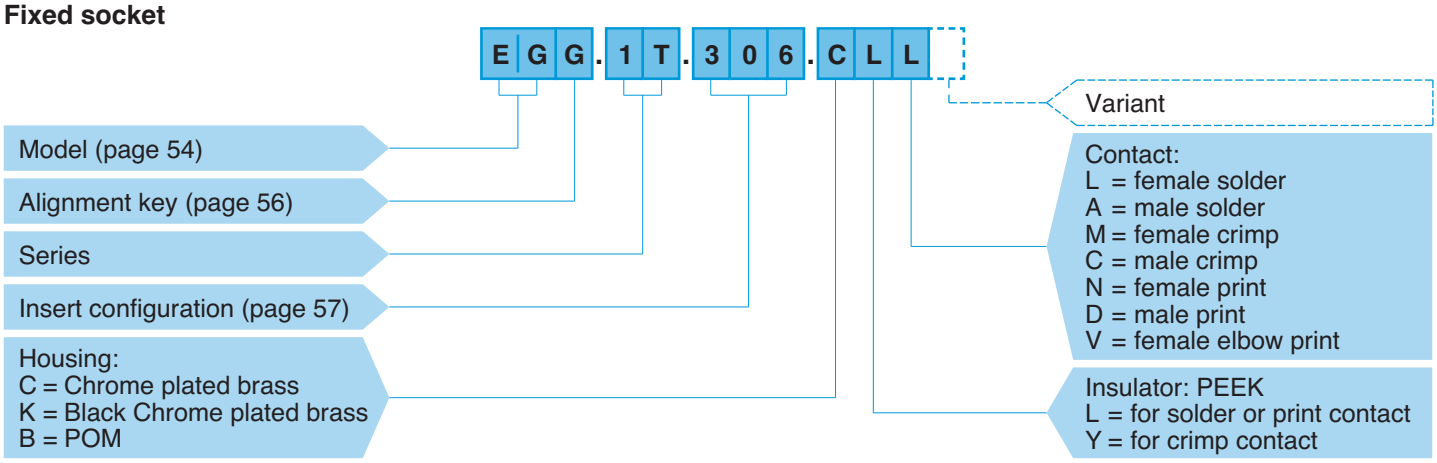

EGG.1T.306.CLL = fixed socket, nut fixing, with key (G), 1T series, multipole type with 6 contacts, outer shell in chrome-plated brass, PEEK insulator, female solder contacts.

Part Section Showing Internal Components

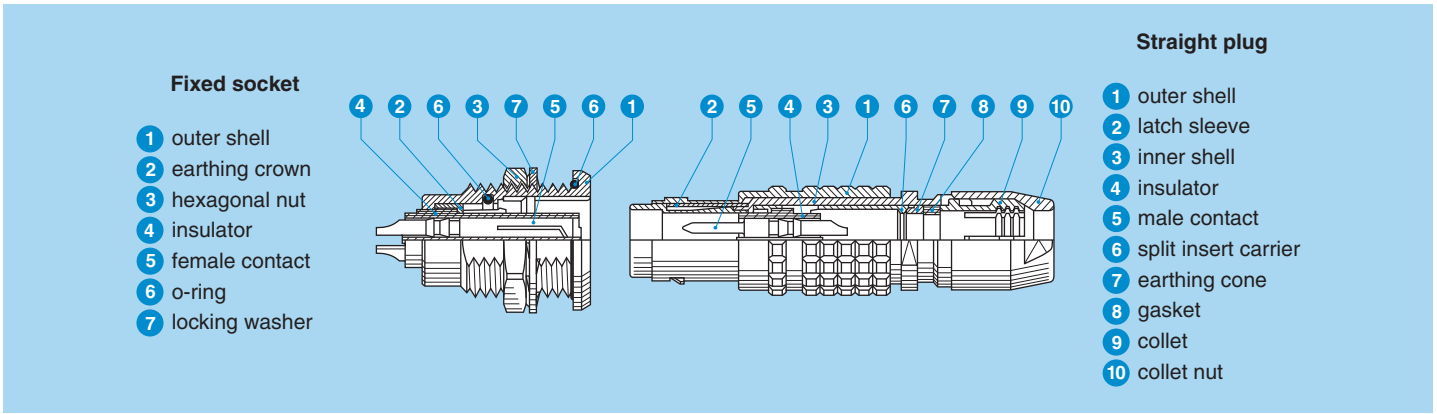

Chrome-plated housing models

Technical Characteristics

Mechanical and Climatical

Characteristics	Value	Standard
Endurance	> 3000 cycles	IEC 60512-5 test 9a
Humidity	up to 95% at 60° C	
Temperature range	- 55° C, + 200° C / (-20°C, +80°C) 1)	
Resistance to vibrations	10-2000 Hz, 15g	IEC 60512-4 test 6d
Shock resistance	100 g, 6 ms	IEC 60512-4 test 6c
Salt spray corrosion test	> 1000h	IEC 60512-6 test 11f
Protection index (mated) 2)	IP 68/IP 66	IEC 60529
Latching retention force 3)	From 85 N up to 300 N 4)	
Climatical category	50/175/21	IEC 60068-1

Electrical

Characteristics		Value	Standard
Shielding efficiency	at 10 MHz	> 75 dB	IEC 60169-1-3
	at 1 GHz	> 40 dB	IEC 60169-1-3

Note:
the various tests have been carried out with FGG and EGG connector pairs, with chrome-plated brass shell and PEEK insulator.
Detailed electrical characteristics, as well as materials and treatment are presented in the chapter Technical Characteristics on page 213.

Note: 1) operating temperature is -20°C, +80°C for watertight or vacuumtight models fitted with an FPM (Viton®) o-ring and Epoxy. 2) IP68 achieved providing that the cable is perfectly circular and that assembly process ensures a high integrity seal. 3) Average value. 4) Depending of the size.

FGG Straight plug, cable collet



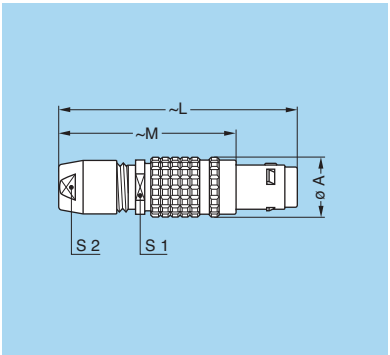

Reference		Dimensions (mm)					Cable ø	
Model	Series	A	L	M	S1	S2	min.	max.
FGG	TT	7.0	33.2	25.2	5.5	5	2.4	3.0
FGG	0T	9.5	39.0	29.0	7.5	7	1.0	5.0
FGG	1T	12.0	46.0	35.0	11.0	9	1.3	6.5
FGG	2T	15.0	55.0	43.0	14.0	12	1.3	8.5
FGG	3T	18.8	64.0	49.0	16.0	14	2.6	10.5

M1 Cable assembly (page 196)

FGG Straight plug, cable collet and nut for fitting a bend relief 1)



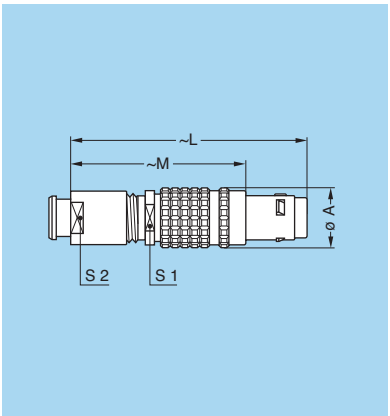

Reference		Dimensions (mm)					Cable ø	
Model	Series	A	L	M	S1	S2	min.	max.
FGG	TT	7.0	32.7	24.7	5.5	6	2.4	3.0
FGG	0T	9.5	38.0	28.0	7.5	7	1.0	5.0
FGG	1T	12.0	45.0	34.0	11.0	9	1.3	6.5
FGG	2T	15.0	54.0	42.0	14.0	12	1.3	8.5
FGG	3T	18.8	62.0	47.0	16.0	15	2.6	10.5

M1 Cable assembly (page 196)

Note: 1) to order, add a «Z» at the end of the reference.
The bend relief must be ordered separately (see page 167).

FFG Straight plug, non latching, cable collet



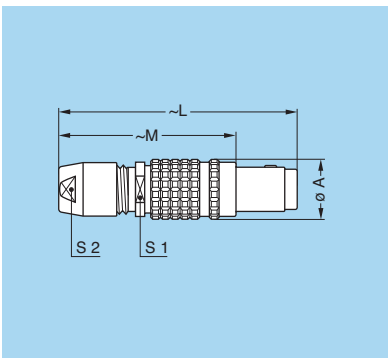

Reference		Dimensions (mm)					Cable ø	
Model	Series	A	L	M	S1	S2	min.	max.
FFG	TT	7.0	33.2	25.2	5.5	5	2.4	3.0
FFG	0T	9.5	39.0	29.0	7.5	7	1.0	5.0
FFG	1T	12.0	46.0	35.0	11.0	9	1.3	6.5
FFG	2T	15.0	55.0	43.0	14.0	12	1.3	8.5
FFG	3T	18.8	64.0	49.0	16.0	14	2.6	10.5

M1 Cable assembly (page 196)

PHG Free socket, cable collet



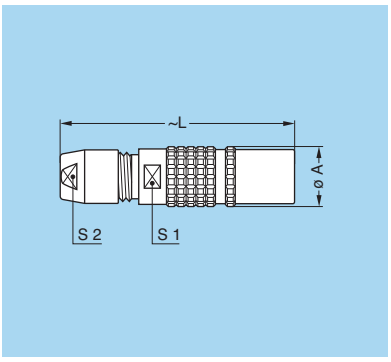

Reference		Dimensions (mm)				Cable ø	
Model	Series	A	L	S1	S2	min.	max.
PHG	TT	7.0	32.0	5.5	5	2.4	3.0
PHG	0T	9.5	38.0	7.5	7	1.0	5.0
PHG	1T	12.0	43.5	11.0	9	1.3	6.5
PHG	2T	15.0	52.0	14.0	12	1.3	8.5
PHG	3T	18.8	61.5	16.0	14	2.6	10.5

M1 Cable assembly (page 196)

PHG Free socket, cable collet and nut for fitting a bend relief [1)]



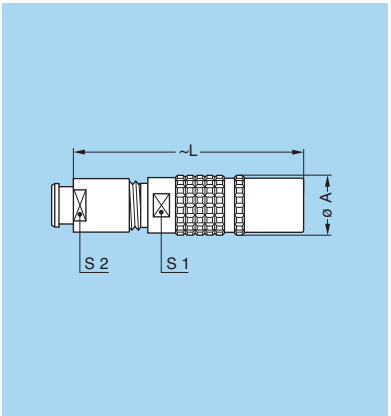

Reference		Dimensions (mm)				Cable ø	
Model	Series	A	L	S1	S2	min.	max.
PHG	TT	7.0	31.5	5.5	6	2.4	3.0
PHG	0T	9.5	37.0	7.5	7	1.0	5.0
PHG	1T	12.0	42.5	11.0	9	1.3	6.5
PHG	2T	15.0	51.0	14.0	12	1.3	8.5
PHG	3T	18.8	60.0	16.0	15	2.6	10.5

M1 Cable assembly (page 196)

Note: [1)] to order, add a «Z» at the end of the reference.
The bend relief must be ordered separately (see page 167).

EGG Fixed socket, nut fixing



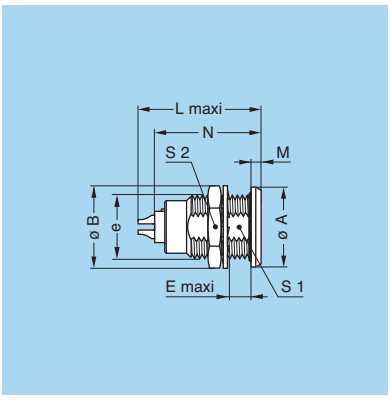

Reference		Dimensions (mm)								
Model	Series	A	B	e	E	L	M	N[1)]	S1	S2
EGG	TT	10.0	10.2	M7x0.5	5.5	16.0	1.2	13.5	6.3	9
EGG	0T	12.0	12.5	M9x0.6	6.0	21.0	1.5	19.1	8.2	11
EGG	1T	15.5	16.0	M12x1.0	6.0	23.0	1.8	21.5	10.5	14
EGG	2T	18.5	19.6	M15x1.0	7.5	26.5	1.8	24.6	13.5	17
EGG	3T	23.5	25.1	M18x1.0	9.6	30.1	2.5	25.0	16.5	22

P1 Panel cut-out (page 179)

Note: [1)] maximum length with crimp contacts.

EEG Fixed socket, nut fixing, back panel mounting



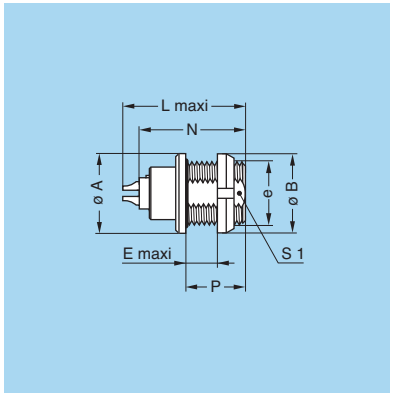

Reference		Dimensions (mm)							
Model	Series	A	B	e	E	L	N[1)]	P	S1
EEG	**TT**	10.0	10.0	M7x0.5	4.5	16.0	13.5	7	6.3
EEG	**0T**	12.0	12.0	M9x0.6	6.5	21.0	19.1	9	8.2
EEG	**1T**	15.5	16.0	M12x1.0	6.5	23.0	21.5	10	10.5
EEG	**2T**	18.5	20.0	M15x1.0	7.5	26.5	24.6	11	13.5
EEG	**3T**	23.5	24.0	M18x1.0	7.5	30.1	25.0	12	16.5

P1 Panel cut-out (page 179)

Note: [1)] maximum length with crimp contacts.

Watertight or vacuumtight models

These models are identified by a letter «P» at the end of the reference. Most of these models are also available in a vacuumtight version. Such models are identified by an additional letter «V» at the end of the part number (certificate on request). Epoxy resin is used to seal these models. The temperature range is -20°C / +80°C.

Part Number Example

HGG.0T.305.CLLP (5 contacts, resin potted)
HGG.0T.305.CLLPV (5 contacts, resin potted and vacuumtight tested)

HGG Fixed socket, nut fixing, watertight or vacuumtight

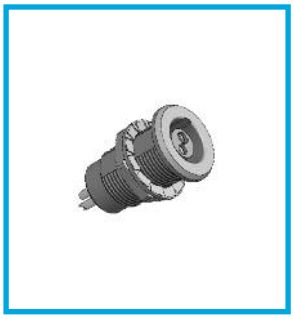

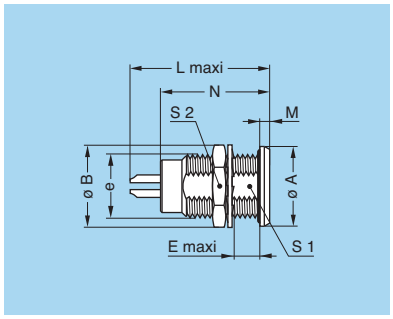

Reference		Dimensions (mm)								
Model	Series	A	B	e	E	L	M	N[1)]	S1	S2
HGG	**TT**	10.0	10.2	M7x0.5	5.5	18.0	1.2	15.0	6.3	9
HGG	**0T**	12.0	12.5	M9x0.6	6.5	22.0	1.5	18.5	8.2	11
HGG	**1T**	15.5	16.0	M12x1.0	6.0	26.0	1.8	21.5	10.5	14
HGG	**2T**	18.5	19.6	M15x1.0	8.0	30.5	1.8	25.0	13.5	17

P9 Panel cut-out (page 179)

HEG Fixed socket, nut fixing, watertight or vacuumtight, back panel mounting



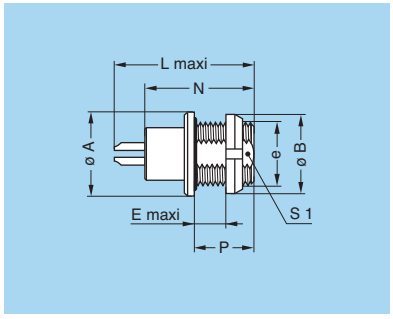

Reference		Dimensions (mm)							
Model	Series	A	B	e	E	L	N	P	S1
HEG	**TT**	10.0	10.0	M7x0.5	4.5	18.0	15.0	7	6.3
HEG	**0T**	12.0	12.0	M9x0.6	6.5	22.0	18.5	9	8.2
HEG	**1T**	15.5	16.0	M12x1.0	6.5	26.0	21.5	10	10.5
HEG	**2T**	18.5	20.0	M15x1.0	7.5	30.5	25.0	11	13.5

P9 Panel cut-out (page 179)

HMG Fixed socket with earthing tag, nut fixing, watertight or vacuumtight, back panel mounting



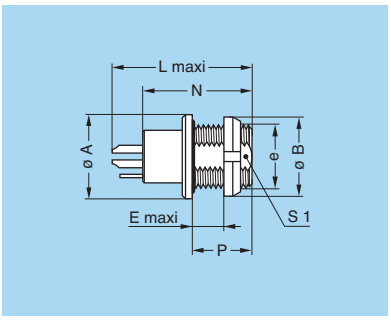

Reference		Dimensions (mm)							
Model	Series	A	B	e	E	L	N	P	S1
HMG	TT	10.0	10.0	M7x0.5	4.5	18.0	15.0	7	6.3
HMG	0T	12.0	12.0	M9x0.6	6.5	22.0	18.5	9	8.2
HMG	1T	15.5	16.0	M12x1.0	6.5	26.0	21.5	10	10.5
HMG	2T	18.5	20.0	M15x1.0	7.5	30.5	25.0	11	13.5

P9 Panel cut-out (page 179)

Plastic housing models

FGG Straight plug, cable collet and nut for fitting a bend relief, POM outer shell [1)]



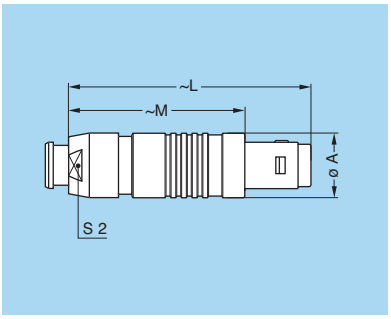

Reference		Dimensions (mm)				Cable ø	
Model	Series	A	L	M	S2	min.	max.
FGG	0T	9.7	38.5	28.5	8	1.0	5.0
FGG	1T	13.0	45.0	34.0	10	1.3	6.5

M1 Cable assembly (page 196)

Note: [1)] to order, add a «Z» at the end of the reference.
The bend relief must be ordered separately (see page 167).

EGG Fixed socket, nut fixing, POM outer shell



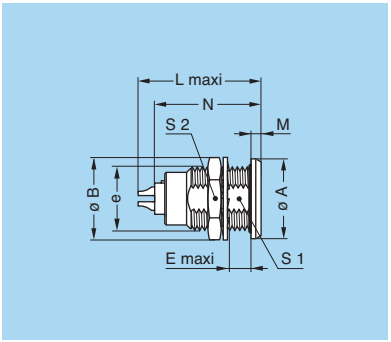

Reference		Dimensions (mm)								
Model	Series	A	B	e	E	L	M	N[1)]	S1	S2
EGG	0T	12.0	12.5	M9x0.6	6.0	21.0	1.5	19.1	8.2	11
EGG	1T	15.5	16.0	M12x1.0	6.0	23.0	1.8	21.5	10.5	14

P1 Panel cut-out (page 179)

Note: [1)] maximum length with crimp contacts.

Alignment Key

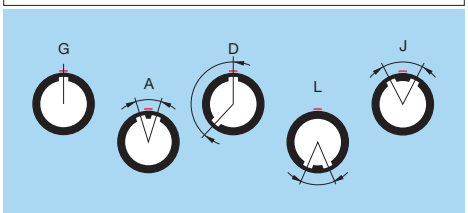

Key	Contact type	
	Plug	Socket
G	male	female
A	male	female
D	male	female
L	female	male
J	female	male

Insert configuration (B, K and T series)

Multipole

	Solder contacts / Crimp contacts		Reference	Series	Contact ø (mm)	Contact type: Solder	Contact type: Crimp	Contact type: Print (straight)	Contact type: Print (elbow)	AWG: Solder (max.)	AWG: Crimp min.	AWG: Crimp max.	Solder contact: Test voltage (kV rms)[1] Contact-contact	Solder contact: Test voltage (kV rms)[4] Contact-shell	Crimp contact: Test voltage (kV rms)[1] Contact-contact	Crimp contact: Test voltage (kV rms)[4] Contact-shell	Rated current (A)[1]
2	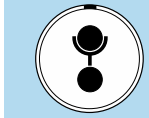	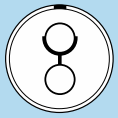	302	00-TT	0.5	●	●	●	●	30	32	28	1.00	0.95	1.15	1.20	3.5
				0B-0K-0T	0.9	●	●	●	●	20	32	20	1.00	1.05	1.45	1.20	10.0[2]
				1B-1K-1T	1.3	●	●	●	●	20	26	18	1.50	1.35	1.70	1.45	15.0[3]
				2B-2K-2T	2.0	●	●	●	●	16	18	12	2.10	1.75	2.85	2.70	25.0[3]
				3B-3K-3T	3.0	●	●	○	–	12	14	10	2.10	1.55	2.30	1.80	35.0
				5B-5K	6.0	●	–	–	–	8	–	–	3.60	2.95	–	–	50.0
3	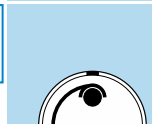		303	00-TT	0.5	●	●	●	●	30	32	28	0.80	0.95	1.35	1.10	3.0
				0B-0K-0T	0.9	●	●	●	●	20	32	20	1.20	0.90	1.70	1.60	8.0[2]
				1B-1K-1T	1.3	●	●	●	●	20	26	18	1.30	1.55	1.60	1.85	12.0
				2B-2K-2T	1.6	●	●	●	●	18	22	14	2.40	1.85	1.90	1.90	17.0[3]
				3B-3K-3T	2.0	●	●	●	○	16	18	12	1.90	1.50	3.20	2.65	25.0
4			304	00-TT	0.5	●	●	●	●	30	32	28	0.80	0.65	1.05	1.05	2.0
				0B-0K-0T	0.7	●	●	●	●	22	32	22	0.85	0.70	1.35	1.10	7.0[2]
				1B-1K-1T	0.9	●	●	●	●	22	32	20	1.35	1.45	1.70	1.80	10.0[2]
				2B-2K-2T	1.3	●	●	●	●	20	26	18	1.85	1.85	2.20	2.20	15.0[3]
				3B-3K-3T	2.0	●	●	●	●	16	18	12	1.45	1.25	2.50	2.20	19.0
				4B-4K	3.0	●	●	○	–	12	14	10	2.10	1.50	1.80	1.20	30.0
				5B-5K	4.0	●	●	○	–	10	12	10	2.95	2.65	3.20	2.40	35.0
5		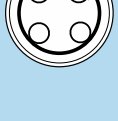	305														
				00-TT	0.35	●	–	●	–	30	–	–	0.70	1.00	–	–	1.7

● First choice alternative
○ Special order alternative

Note: [1] see calculation method, caution and suggested standard on page 213.
[2] rated current = 6A for socket with elbow (90°) contact for printed circuit.
[3] rated current = 12A for socket with elbow (90°) contact for printed circuit.
[4] test voltage (kV) contact-shell is slightly lower for K and T series (values here are for B series).

Multipole

	Solder contacts / Crimp contacts		Reference	Series	Contact ø (mm)	Contact type: Solder	Contact type: Crimp	Contact type: Print (straight)	Contact type: Print (elbow)	AWG: Solder (max.)	AWG: Crimp min.	AWG: Crimp max.	Solder contact: Test voltage (kV rms)[1] Contact-contact	Solder contact: Test voltage (kV rms)[5] Contact-shell	Crimp contact: Test voltage (kV rms)[1] Contact-contact	Crimp contact: Test voltage (kV rms)[5] Contact-shell	Rated current (A)[1]
5			305	0B-0K-0T	0.7	●	●	●	●	22	32	22	1.00	0.70	1.25	1.20	6.5[2]
				1B-1K-1T	0.9	●	●	●	●	22	32	20	1.25	1.15	1.30	1.55	9.0[2]
				2B-2K-2T	1.3	●	●	●	●	20	26	18	1.75	1.60	2.15	2.15	14.0[3]
				3B-3K-3T	1.6	●	●	●	○	18	22	14	1.90	1.25	2.40	1.75	19.0
6			306														
				0B-0K-0T	0.5	●	○[4]	●	●	28	32	28	0.85	0.65	1.40	1.20	2.5
				1B-1K-1T	0.7	●	●	●	●	22	32	22	1.05	1.20	1.35	1.45	7.0[2]
6			306	00-TT	0.35	●	–	–	–	30	–	–	0.60	0.75	–	–	1.5
				2B-2K-2T	1.3	●	●	●	●	20	26	18	1.35	1.45	2.00	2.35	12.0
				3B-3K-3T	1.6	●	●	●	●	18	22	14	1.60	1.15	1.90	1.80	17.0
				4B-4K	2.0	●	●	○	–	16	18	12	2.00	1.75	2.75	2.40	24.0
7			307	0B-0K-0T	0.5	●	○[4]	●	●	28	32	28	0.80	0.70	1.40	1.20	2.5
				1B-1K-1T	0.7	●	●	●	●	22	32	22	0.95	1.05	1.45	1.45	7.0[2]
				2B-2K-2T	1.3	●	●	●	●	20	26	18	1.75	1.60	1.95	2.15	11.0
				3B-3K-3T	1.6	●	●	●	○	18	22	14	1.70	1.25	2.00	2.05	15.0
				4B-4K	2.0	●	●	○	–	16	18	12	2.00	1.80	1.50	1.35	20.0
8			308														
				1B-1K-1T	0.7	●	●	●	●	22	32	22	0.95	1.15	1.30	1.30	5.0
8		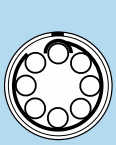	308														
				2B-2K-2T	0.9	●	●	●	●	22	32	20	1.50	1.25	1.95	1.95	10.0[2]
				3B-3K-3T	1.3	●	●	●	●	20	26	18	1.65	1.15	1.85	1.75	13.0

● First choice alternative
○ Special order alternative

Note: [1] see calculation method, caution and suggested standard on page 213.
[2] rated current = 6A for socket with elbow (90°) contact for printed circuit.
[3] rated current = 12A for socket with elbow (90°) contact for printed circuit.
[4] available only for connectors fitted with male contacts.
[5] test voltage (kV) contact-shell is slightly lower for K and T series (values here are for B series).

Multipole

	Solder contacts / Crimp contacts		Reference	Series	Contact ø (mm)	Contact type: Solder	Contact type: Crimp	Contact type: Print (straight)	Contact type: Print (elbow)	AWG: Solder (max.)	AWG: Crimp min.	AWG: Crimp max.	Solder contact: Test voltage (kV rms)[1] Contact-contact	Solder contact: Test voltage (kV rms)[4] Contact-shell	Crimp contact: Test voltage (kV rms)[1] Contact-contact	Crimp contact: Test voltage (kV rms)[4] Contact-shell	Rated current (A)[1]
9	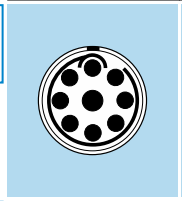	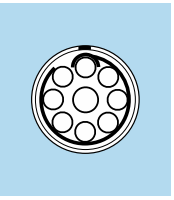	309	0T	0.5	●	○[3]	●	●	28	32	28	0.60	0.50	1.00	0.85	2.0
				3B-3K-3T	8x1.3 1x2.0	●	●	●	–	20 16	26 18	18 12	1.35	1.05	1.10	1.05	6.0 15.0
9	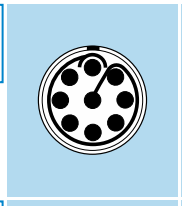	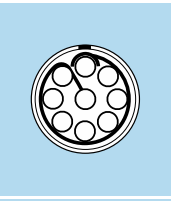	309	0B-0K	0.5	●	○[3]	●	●	28	32	28	0.60	0.50	1.00	0.85	2.0
10	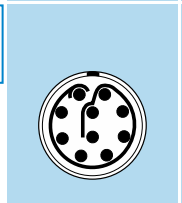	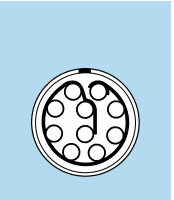	310	1B-1K-1T	0.5	●	○[3]	●	●	28	32	28	0.90	1.50	1.20	1.80	2.5
				2B-2K-2T	0.9	●	●	●	●	22	32	20	1.45	1.30	1.80	2.10	8.0[2]
				3B-3K-3T	1.3	●	●	●	●	20	26	18	1.25	0.90	1.50	1.80	12.0
				4B-4K	1.6	●	●	○	–	18	22	14	1.85	1.30	1.90	1.95	17.0
				5B-5K	3.0	●	●	○	–	12	14	10	2.35	2.30	2.65	3.20	20.0
12	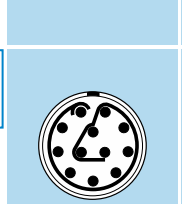	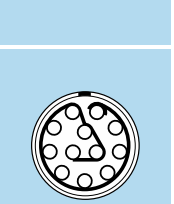	312	0B-0K-0T	0.35	●	–	●	–	30	–	–	0.80	1.00	–	–	1.5
12	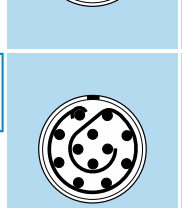	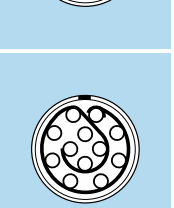	312	XB	0.7	●	–	●	–	22	32	22	1.35	1.65	–	–	5.0
12	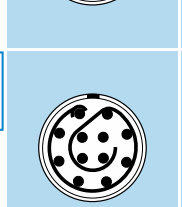	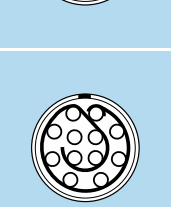	312	2B-2K-2T	0.7	●	●	●	●	22	32	22	1.25	1.35	1.65	2.00	7.0[2]
				3B-3K-3T	0.9	●	●	●	●	22	32	20	1.45	1.00	1.65	1.85	9.0
				4B-4K	1.3	●	●	○	–	20	26	18	1.45	1.60	1.90	1.85	12.0

● First choice alternative
○ Special order alternative

Note: [1] see calculation method, caution and suggested standard on page 213.
[2] rated current = 6A for socket with elbow (90°) contact for printed circuit.
[3] available only for connectors fitted with male contacts.
[4] test voltage (kV) contact-shell is slightly lower for K and T series (values here are for B series).

Multipole

	Solder contacts / Crimp contacts		Reference	Series	Contact ø (mm)	Contact type: Solder	Contact type: Crimp	Contact type: Print (straight)	Contact type: Print (elbow)	AWG: Solder (max.)	AWG: Crimp min.	AWG: Crimp max.	Solder contact: Test voltage (kV rms)[1] Contact-contact	Solder contact: Test voltage (kV rms)[4] Contact-shell	Crimp contact: Test voltage (kV rms)[1] Contact-contact	Crimp contact: Test voltage (kV rms)[4] Contact-shell	Rated current (A)[1]
14			314	1B-1K-1T	0.5	●	○[3]	●	●	28	32	28	0.80	1.20	0.95	1.60	2.0
				2B-2K-2T	0.7	●	●	●	●	22	32	22	1.15	1.35	1.55	1.55	6.5[2]
				3B-3K-3T	0.9	●	●	●	●	22	32	20	1.20	1.20	1.80	1.65	9.0[2]
				5B-5K	2.0	●	●	○	–	16	18	12	2.10	2.00	2.85	2.95	18.0
16			316	1B-1K-1T	0.5	●	○[3]	●	○	28	32	28	0.80	1.25	0.95	1.60	1.5
16			316	2B-2K-2T	0.7	●	●	●	●	22	32	22	0.95	1.25	1.55	1.75	6.0
				3B-3K-3T	0.9	●	●	●	●	22	32	20	1.20	0.85	1.80	1.50	8.0
				4B-4K	0.9	●	●	●	–	22	32	20	1.35	1.50	2.30	2.10	10.0
				5B-5K	2.0	●	●	○	–	16	18	12	1.85	1.95	2.45	3.05	12.0
18			318	2B-2K-2T	0.7	●	●	●	●	22	32	22	0.85	1.20	1.45	2.10	5.5
				3B-3K-3T	0.9	●	●	●	●	22	32	20	1.20	1.05	1.85	1.60	7.0
19			319	2B-2K-2T	0.7	●	●	●	●	22	32	22	0.95	1.25	1.55	1.65	5.0
20			320	3B-3K-3T	0.7	●	●	●	●	22	32	22	1.00	0.90	1.35	1.55	6.0

● First choice alternative
○ Special order alternative

Note: [1] see calculation method, caution and suggested standard on page 213.
[2] rated current = 6A for socket with elbow (90°) contact for printed circuit.
[3] available only for connectors fitted with male contacts.
[4] test voltage (kV) contact-shell is slightly lower for K and T series (values here are for B series).

Multipole

	Solder contacts / Crimp contacts		Reference	Series	Contact ø (mm)	Contact type: Solder	Contact type: Crimp	Contact type: Print (straight)	Contact type: Print (elbow)	AWG: Solder (max.)	AWG: Crimp min.	AWG: Crimp max.	Solder contact: Test voltage (kV rms)[1] Contact-contact	Solder contact: Test voltage (kV rms)[2] Contact-shell	Crimp contact: Test voltage (kV rms)[1] Contact-contact	Crimp contact: Test voltage (kV rms)[2] Contact-shell	Rated current (A)[1]
20			320	4B-4K	0.9	●	●	●	–	22	32	20	1.35	1.00	1.05	0.95	8.0
				5B-5K	1.6	●	●	○	–	18	22	14	1.90	1.70	2.20	2.40	10.0
22			322	XB	0.5	●	–	●	–	28	–	–	0.50	0.90	–	–	1.5
22			322	3B-3K-3T	0.7	●	●	●	○	22	32	22	1.00	0.90	1.70	1.45	5.5
24			324	3B-3K-3T	0.7	●	●	●	●	22	32	22	0.95	0.80	1.35	1.35	4.0
				4B-4K	0.9	●	●	●	–	22	32	20	1.20	1.45	1.80	2.05	7.0
26			326	2B-2K-2T	0.5	●	–	●	○	28	–	–	0.95	1.30	–	–	2.0
				3B-3K-3T	0.7	●	●	●	○	22	32	22	0.95	0.70	1.50	1.30	4.0
30			330	3B-3K-3T	0.7	●	●	●	●	22	32	22	0.80	0.70	1.35	1.20	3.5
				4B-4K	0.9	●	●	●	–	22	32	20	0.95	0.85	1.75	1.45	5.0
				5B-5K	1.3	●	●	○	–	20	26	18	1.45	1.60	2.05	2.45	8.0

● First choice alternative
○ Special order alternative

Note: [1] see calculation method, caution and suggested standard on page 213.
[2] test voltage (kV) contact-shell is slightly lower for K and T series (values here are for B series).

Multipole

	Solder contacts / Crimp contacts		Reference	Series	Contact ø (mm)	Contact type: Solder	Contact type: Crimp	Contact type: Print (straight)	Contact type: Print (elbow)	AWG: Solder (max.)	AWG: Crimp min.	AWG: Crimp max.	Solder contact: Test voltage (kV rms)[1] Contact-contact	Solder contact: Test voltage (kV rms)[2] Contact-shell	Crimp contact: Test voltage (kV rms)[1] Contact-contact	Crimp contact: Test voltage (kV rms)[2] Contact-shell	Rated current (A)[1]
32			332	2B-2K-2T	0.5	●	–	●	○	28	–	–	0.80	1.20	–	–	1.5
32			332	3B-3K	0.7	●	○	●	○	22	32	22	0.75	0.70	–	–	3.0
40			340	4B-4K	0.7	●	●	●	–	22	32	22	0.90	0.90	1.30	1.30	2.0
				5B-5K	1.3	●	●	○	–	20	26	18	1.30	1.45	2.00	1.95	7.0
48			348	4B-4K	0.7	●	●	●	–	22	32	22	0.70	0.70	1.00	1.00	1.5
48			348	5B-5K	1.3	●	●	●	–	20	26	18	1.20	1.10	2.00	1.55	6.0
50			350	5B-5K	0.9	●	●	●	–	22	32	20	1.30	1.60	1.20	1.45	6.0

● First choice alternative
○ Special order alternative

Note: [1] see calculation method, caution and suggested standard on page 213.
[2] test voltage (kV) contact-shell is slightly lower for K and T series (values here are for B series).

Multipole

	Solder contacts / Crimp contacts		Reference	Series	Contact ø (mm)	Contact type: Solder	Contact type: Crimp	Contact type: Print (straight)	Contact type: Print (elbow)	AWG: Solder (max.)	AWG: Crimp min.	AWG: Crimp max.	Solder contact: Test voltage (kV rms)[1] Contact-contact	Solder contact: Test voltage (kV rms)[2] Contact-shell	Crimp contact: Test voltage (kV rms)[1] Contact-contact	Crimp contact: Test voltage (kV rms)[2] Contact-shell	Rated current (A)[1]
54	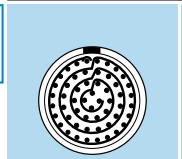	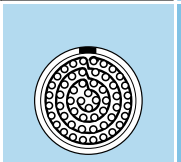	**354**	5B-5K	0.9	●	●	●	–	22	32	20	1.15	1.55	2.00	2.10	5.0
64	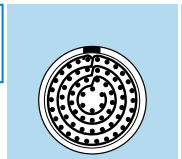	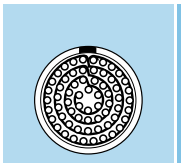	**364**	5B-5K	0.9	●	●	●	–	22	32	20	1.30	1.55	1.35	1.85	3.0

● First choice alternative
○ Special order alternative

Note: [1] see calculation method, caution and suggested standard on page 213.
[2] test voltage (kV) contact-shell is slightly lower for K and T series (values here are for B series).

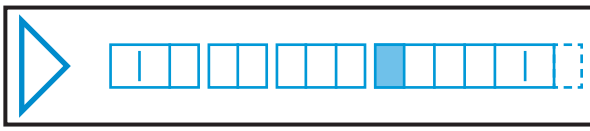

Housings (B, K and T series)

Ref.	Outer shell and collet nut		Latch sleeve + earthing crown		Other metallic components		Remarks	Note
	Material	Surf. treatment	Material	Surf. treatment	Material	Surf. treatment		
C	Brass	chrome	brass/bronze	nickel [2]	brass	nickel		●
N	Brass	nickel	brass/bronze	nickel [2]	brass	nickel		○
K	Brass	black chrome [3]	brass/bronze	nickel [2]	brass	nickel		●
S	Stainless steel	–	brass/bronze	nickel [2]	brass	nickel		●
T	Stainless steel	–	stainless steel	–	brass	nickel		○
U	Stainless steel	–	stainless steel	–	stainless steel	–		○
L	Aluminium alloy	anodized	brass/bronze	nickel [2]	brass	nickel	[1]	○
X	Aluminium alloy	nickel anthracite	brass/bronze	nickel [2]	brass	nickel		○
G	PEEK (natural)	–	brass/bronze	nickel [2]	brass	nickel	Only for FGG and ENG (B series)	●
P	PSU	–	brass/bronze	nickel [2]	brass	nickel	Only for FGY and ENY (B series) [1]	●
R	PPSU	–	brass/bronze	nickel [2]	brass	nickel	Only for FGY and ENY (B series) [1]	●
H	PPS/brass	–/nickel	brass/bronze	nickel [2]	brass	nickel	Only for elbow sockets (B series)	●
P	PA.6	–	brass/bronze	nickel [2]	brass	nickel	Only for CRF and CRG bridge plug [1]	●

Note: detailed characteristics of these materials and treatments are presented on page 205.

● First choice alternative
○ Special order alternative

[1] see «variant» for the colour.
[2] in the K series, the latch sleeve is chrome-plated.
[3] surface not conductive use socket with earthing tag (EN● and HM● model) to carry shield.

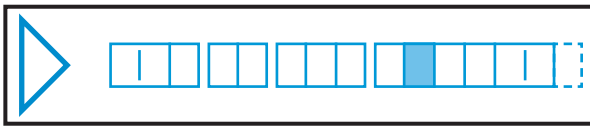

Insulators (B, K and T series)

Ref.	Material	Contact type	Remarks	Note
Y	PEEK	Crimp	extended design, with contacts that recess into insulator	●
L	PEEK	Solder or print		●

Note: detailed characteristics of these materials are presented on page 210.

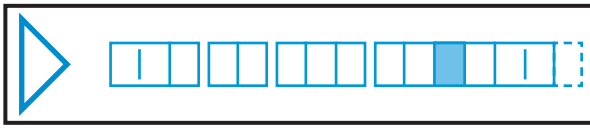

Contacts (B, K and T series)

Soldering characteristics

– no need to order specific tools, a simple soldering iron is sufficient
– ideal for very small and fragile conductors
– contacts with solder cups to allow the solder to flow

Note: see page 211 for more information.

Crimping characteristics

– practical, quick contact fixing outside the insulator
– possible use at high temperature
– need to order specific tools
– no risk of heating the insulator during the conductor-contact fixing
– high tensile strength
– totally lead-free solution

Contacts reference for couplers R●●, S●● and TGL

Ref.	Contact type	Remarks
A	Male - Female	contact configuration is explained on page 24, 33, 48
L	Female - Male	contact configuration is explained on page 24, 33, 48
M	Female - Female	contact configuration is explained on page 24

Contacts reference for plugs, free or fixed sockets

Contact type	Reference		Contact			Conductor						F_r [1] (N)	Notes
						Solid		Stranded					
								AWG		Section (mm²)			
	Male	Female	ø A (mm)	ø C (mm)	Form per fig.	AWG max.	Section max. (mm²)	min.	max.	min.	max.		
Solder 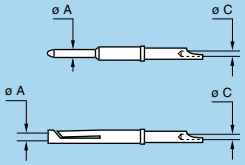	**A**	**L**	0.35	0.40	–	28	0.09	–	30	–	0.05	–	
			0.5[2]	0.40[2]	–	28	0.09	–	30	–	0.05	–	
			0.5	0.45[6]	–	28	0.09	–	28	–	0.09	–	
			0.7	0.80	–	22	0.34	–	22[3]	–	0.34	–	
			0.9	0.80[5]	–	22[5]	0.34[5]	–	22[3][5]	–	0.34[5]	–	
			1.3	1.00	–	20	0.50	–	20[3]	–	0.50	–	●
			1.6	1.40	–	16	1.00	–	18	–	1.00	–	
			2.0	1.80	–	14	1.50	–	16	–	1.50	–	
			3.0	2.70	–	10	4.00	–	12	–	4.00	–	
			4.0	3.70	–	10	6.00	–	10	–	6.00	–	
			6.0	5.20	–	–	–	–	8	–	10.00	–	
Crimp fig. 1 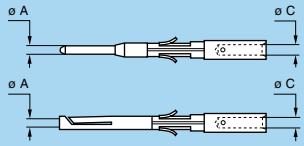	**C**	**M**	0.5[4]	0.45	1	–	–	32	28	0.035	0.09	12	●
	C	**M**	0.7	0.80	1	–	–	26	22[3]	0.140	0.34	22	●
	B	**P**	0.7	0.45	2	–	–	32	28	0.035	0.09	22	○
	C	**M**	0.9	1.10	1	–	–	24	20	0.250	0.50	30	●
	B	**P**	0.9	0.80	2	–	–	26	22[3]	0.140	0.34	30	○
	G	**U**	0.9	0.45	2	–	–	32	28	0.035	0.09	30	○
	C	**M**	1.3	1.40	1	–	–	20	18	0.500	1.00	40	●
	B	**P**	1.3	1.10	2	–	–	24	20	0.250	0.50	40	○
	G	**U**	1.3	0.80	2	–	–	26	22[3]	0.140	0.34	40	○
fig. 2 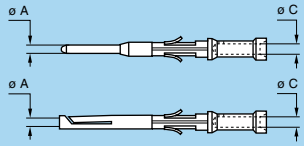	**C**	**M**	1.6	1.90	1	–	–	18	14[3]	1.000	1.50	50	●
	B	**P**	1.6	1.40	2	–	–	22	18	0.340	1.00	50	○
	C	**M**	2.0	2.40	1	–	–	16	12[3]	1.500	2.50	65	●
	B	**P**	2.0	1.90	2	–	–	18	14	1.000	1.50	65	○
	C	**M**	3.0	3.20	1	–	–	14	10[3]	2.500	4.00	75	●
	C	**M**	4.0	4.00	1	–	–	12	10	4.000	6.00	90	●

Note:
[1] contact retention force in the insulator (according to IEC 60512-8 test 15 a).
[2] for 00 multipole series.
[3] for a given AWG, the diameter of some stranded conductor designs is larger than the solder cup diameter. Make sure that the maximum conductor diameter is smaller than ø C.
[4] available only for 00 multipole series and connectors fitted with male contacts of the 0B and 1B series.
[5] for 0B.302/0B.303 and 0K.302/0K.303 ø C = 1.0 mm, AWG max 20, section max (mm²) 0.50.
[6] for 00 and 1B/1K series, according to manufacturing and plating tolerance ø C min = 0.43 mm.

● First choice alternative ○ Special order alternative

Contacts reference for plugs, free or fixed sockets

Contact type	Reference		Contact			Conductor						F_r [1] (N)	Notes
						Solid		Stranded					
	Male	Female	ø A (mm)	ø C (mm)	Form per fig.	AWG max.	Section max. (mm^2)	AWG min.	AWG max.	Section (mm^2) min.	Section (mm^2) max.		
Print 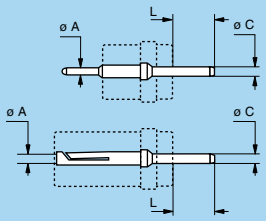	**D**	**N**	L dimensions and C are detailed in the section on PCB drilling pattern. See page 185.										●
Print (elbow) 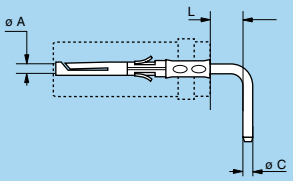	**V**	**V**	L dimensions and C are detailed in the section on PCB drilling pattern. See page 186.										●

Note: [1] contact retention force in the insulator (according to IEC 60512-8 test 15 a).

● First choice alternative ○ Special order alternative

Collets (B, K and T series)

D and M type collets for B series

D type



M type



	Reference		Collet ø		Cable ø		Notes
	Type	Code	ø A	ø B	max.	min.	
00	D	22	2.2	–	2.2	1.4	
	D	27	2.7	–	2.7	> 2.2	
	D	35	3.5	2.8	3.5	> 2.7	
0B	D	22	2.1	–	2.2	1.4	2)
	D	32	3.2	–	3.2	> 2.2	
	D	42	4.2	–	4.2	> 3.2	
	D	52	5.2	4.7	5.2	> 4.2	
	D	56	5.6	4.7	5.6	> 5.2	1)
1B	M	27	2.7	–	2.7	> 2.2	
	M	31	3.1	–	3.1	> 2.7	
	D	42	4.2	–	4.2	3.1	
	D	52	5.2	–	5.2	> 4.2	
	D	62	6.2	–	6.2	> 5.2	
	D	72	7.2	6.2	7.2	> 6.2	
	D	76	7.6	6.9	7.6	> 7.2	1)
XB	D	52	5.2	7.2	5.0	4.4	
	D	62	6.2	7.2	6.0	5.4	
	D	72	7.2	7.2	7.0	6.4	
	D	82	8.2	7.2	8.0	7.4	1)
2B	M	21	2.1	–	2.2	1.4	
	M	32	3.1	–	3.2	> 2.2	
	D	42	4.2	–	4.2	> 3.2	
	D	52	5.2	–	5.2	> 4.2	
	D	62	6.2	–	6.2	> 5.2	
	D	72	7.2	–	7.2	> 6.2	
	D	82	8.2	–	8.2	> 7.2	
	D	92	9.2	8.6	9.2	> 8.2	
	D	99	9.9	8.6	9.9	> 9.2	1)

	Reference		Collet ø		Cable ø		Notes
	Type	Code	ø A	ø B	max.	min.	
3B	M	52	5.2	–	5.2	> 4.2	
	D	62	6.2	–	6.2	4.9	
	D	72	7.7	–	7.7	> 6.2	
	D	92	9.2	–	9.2	> 7.7	
	D	10	10.2	–	10.0	> 9.2	
	D	11	11.0	–	11.0	> 10.1	
	D	12	12.0	10.2	11.9	10.8	1)
4B	M	62	6.2	–	6.2	> 5.2	
	M	72	7.2	–	7.2	> 6.2	
	M	82	8.2	–	8.2	> 7.2	
	M	92	9.2	8.6	9.2	> 8.2	
	D	10	10.8	–	10.5	9.1	
	D	12	12.3	–	12.0	10.6	
	D	13	13.8	12.5	13.5	12.1	
	D	15	15.3	12.5	15.0	13.6	
	D	16	16.3	12.5	16.0	15.1	1)
5B	D	11	11.8	–	11.5	9.6	
	D	13	13.8	–	13.5	11.6	
	D	15	15.8	–	15.5	13.6	
	D	17	17.8	–	17.5	15.6	1)
	D	19	19.8	–	19.5	17.6	1)
	D	21	21.8	–	21.5	19.6	1)
	D	23	23.8	21.8	23.5	21.6	1)
	D	25	25.3	21.8	25.0	23.6	1)

Note: all dimensions are in millimetres.
1) these collets cannot be used for connector models with nut for fitting a bend relief.
2) the inner diameter of the smallest bend relief available is 2.5 mm.

C and K type collets for K series

C type

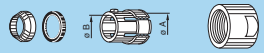

K type
oversize
cable collet



	Reference		Collet ø		Cable ø		Notes
	Type	Code	ø A	ø B	max.	min.	
0K	C	10	1.6	–	1.2	1.0	1)
	C	15	1.6	–	1.5	1.3	1)
	C	20	2.1	–	2.0	1.6	1)
	C	25	3.1	–	2.5	2.1	
	C	30	3.1	–	3.0	2.6	
	C	35	4.2	4.2	3.5	3.1	
	C	40	4.2	4.2	4.0	3.6	
	C	45	5.2	5.2	4.5	4.1	
	C	50	5.2	5.2	5.0	4.6	
1K	C	15	1.6	–	1.5	1.3	
	C	20	2.2	–	2.0	1.6	
	C	25	3.2	–	2.5	2.1	
	C	30	3.2	–	3.0	2.6	
	C	35	4.2	–	3.5	3.1	
	C	40	4.2	–	4.0	3.6	
	C	45	5.2	–	4.5	4.1	
	C	50	5.2	–	5.0	4.6	
	C	55	6.2	6.2	5.5	5.1	
	C	60	6.2	6.2	6.0	5.6	
	C	65	7.2	6.7	6.5	6.1	
	K	70	7.2	–	7.0	6.6	
	K	75	8.2	8.2	7.5	7.1	
	K	80	8.2	8.2	8.0	7.6	
	K	85	9.2	8.6	8.5	8.1	
2K	C	15	2.2	–	1.5	1.3	
	C	20	2.2	–	2.0	1.6	
	C	25	3.2	–	2.5	2.1	
	C	30	3.2	–	3.0	2.6	
	C	35	4.2	–	3.5	3.1	
	C	40	4.2	–	4.0	3.6	
	C	45	5.2	–	4.5	4.1	
	C	50	5.2	–	5.0	4.6	
	C	55	6.2	–	5.5	5.1	
	C	60	6.2	–	6.0	5.6	
	C	65	7.2	–	6.5	6.1	

	Reference		Collet ø		Cable ø		Notes
	Type	Code	ø A	ø B	max.	min.	
2K	C	70	7.2	–	7.0	6.6	
	C	75	8.2	8.2	7.5	7.1	
	C	80	8.2	8.2	8.0	7.6	
	C	85	9.2	8.6	8.5	8.1	
	K	90	9.2	–	9.0	8.6	
	K	95	10.2	10.2	9.5	9.1	
	K	10	10.2	10.2	10.0	9.6	
	K	11	11.2	10.6	10.5	10.1	
3K	C	30	3.2	–	3.0	2.6	
	C	35	4.2	–	3.5	3.1	
	C	40	4.2	–	4.0	3.6	
	C	45	5.2	–	4.5	4.1	
	C	50	5.2	–	5.0	4.6	
	C	55	6.2	–	5.5	5.1	
	C	60	6.2	–	6.0	5.6	
	C	65	7.2	–	6.5	6.1	
	C	70	7.2	–	7.0	6.6	
	C	75	8.2	–	7.5	7.1	
	C	80	8.2	–	8.0	7.6	
	C	85	9.2	–	8.5	8.1	
	C	90	9.2	–	9.0	8.6	
	C	95	10.2	10.2	9.5	9.1	
	C	10	10.2	10.2	10.0	9.6	
	C	11	11.2	10.6	10.5	10.1	
	K	11	12.3	–	12.0	10.6	
	K	12	13.8	13.8	12.8	12.1	
	K	13	13.8	13.8	13.5	12.9	
	K	14	15.3	15.3	14.0	13.6	
	K	15	15.3	15.3	15.0	14.1	

Note: 1) the inner diameter of the smallest bend relief available is 2.5 mm. All dimensions are in millimetres.

C and K type collets for K series

C type

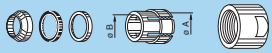

K type
oversize
cable collet



4K

Reference		Collet ø		Cable ø		Notes
Type	Code	ø A	ø B	max.	min.	
C	50	6.3	–	5.0	4.6	
C	55	6.3	–	5.5	5.1	
C	60	6.3	–	6.0	5.6	
C	65	7.3	–	6.5	6.1	
C	70	7.3	–	7.0	6.6	
C	75	8.3	–	7.5	7.1	
C	80	8.3	–	8.0	7.6	
C	85	9.3	–	8.5	8.1	
C	90	9.3	–	9.0	8.6	
C	95	10.8	–	9.5	9.1	
C	10	10.8	–	10.5	9.6	
C	11	12.3	–	12.0	10.6	
C	12	13.8	13.8	12.8	12.1	
C	13	13.8	13.8	13.5	12.9	
C	14	15.3	15.3	14.0	13.6	
C	15	15.3	15.3	15.0	14.1	
K	16	17.8	–	16.5	15.6	
K	17	17.8	–	17.5	16.6	
K	18	19.8	–	18.5	17.6	
K	19	19.8	–	19.5	18.6	
K	20	21.8	–	20.5	19.6	
K	21	21.8	–	21.5	20.6	
K	22	23.8	23.8	22.5	21.6	
K	23	23.8	23.8	23.5	22.6	

5K

Reference		Collet ø		Cable ø		Notes
Type	Code	ø A	ø B	max.	min.	
C	10	11.8	–	10.5	9.6	
C	11	11.8	–	11.5	10.6	
C	12	13.8	–	12.5	11.6	
C	13	13.8	–	13.5	12.6	
C	14	15.8	–	14.5	13.6	
C	15	15.8	–	15.5	14.6	
C	16	17.8	–	16.5	15.6	
C	17	17.8	–	17.5	16.6	
C	18	19.8	–	18.5	17.6	
C	19	19.8	–	19.5	18.6	
C	20	21.8	–	20.5	19.6	
C	21	21.8	–	21.5	20.6	
C	22	23.8	23.8	22.5	21.6	
C	23	23.8	23.8	23.5	22.6	

C type collets for T series

C type



	Reference		Cable ø (mm)	
	Type	Code	max.	min.
TT	C	27	2.6	2.4
	C	31	3.0	2.7
0T	C	10	1.2	1.0
	C	15	1.5	1.3
	C	20	2.0	1.6
	C	25	2.5	2.1
	C	30	3.0	2.6
	C	35	3.5	3.1
	C	40	4.0	3.6
	C	45	4.5	4.1
	C	50	5.0	4.6
1T	C	15	1.5	1.3
	C	20	2.0	1.6
	C	25	2.5	2.1
	C	30	3.0	2.6
	C	35	3.5	3.1
	C	40	4.0	3.6
	C	45	4.5	4.1
	C	50	5.0	4.6
	C	55	5.5	5.1
	C	60	6.0	5.6
	C	65	6.5	6.1

	Reference		Cable ø (mm)	
	Type	Code	max.	min.
2T	C	15	1.5	1.3
	C	20	2.0	1.6
	C	25	2.5	2.1
	C	30	3.0	2.6
	C	35	3.5	3.1
	C	40	4.0	3.6
	C	45	4.5	4.1
	C	50	5.0	4.6
	C	55	5.5	5.1
	C	60	6.0	5.6
	C	65	6.5	6.1
	C	70	7.0	6.6
	C	75	7.5	7.1
	C	80	8.0	7.6
	C	85	8.5	8.1

	Reference		Cable ø (mm)	
	Type	Code	max.	min.
3T	C	30	3.0	2.6
	C	35	3.5	3.1
	C	40	4.0	3.6
	C	45	4.5	4.1
	C	50	5.0	4.6
	C	55	5.5	5.1
	C	60	6.0	5.6
	C	65	6.5	6.1
	C	70	7.0	6.6
	C	75	7.5	7.1
	C	80	8.0	7.6
	C	85	8.5	8.1
	C	90	9.0	8.6
	C	95	9.5	9.1
	C	10	10.0	9.6
	C	11	10.5	10.1

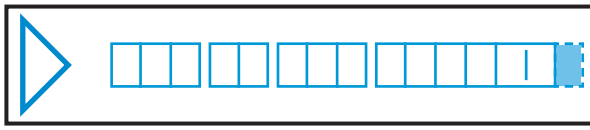

Variant (B, K and T series)

Bend relief for B series models with collet

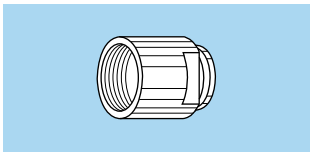

Need to be ordered

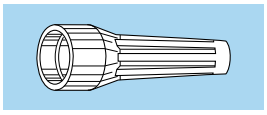

	Ref.	Collet		Need to be ordered separately (see pages 167 and 168)
		Type	Code	
00	Z	D	22 to 35	GMA.00.●●●.●● GMB.00.●●●.●●
0B	Z	D	22 to 52	GMA.0B.●●●.●●
1B	Z	M	27 and 31	GMA.1B.●●●.●●
		D	42 to 72	GMA.1B.●●●.●●
XB	Z	D	52 to 72	GMA.1B.●●●.●●
2B	Z	M	21 and 32	GMA.0B.●●●.●●
		D	42 to 92	GMA.2B.●●●.●●
3B	Z	M	52	GMA.1B.●●●.●●
		D	62 to 10	GMA.3B.●●●.●●
4B	Z	M	62 to 82	GMA.2B.●●●.●●
		M	92	GMA.4B.●●●.●●
		D	10 to 15	GMA.4B.●●●.●●
5B	Z	D	11 to 15	GMA.4B.●●●.●●

Bend relief for K series models with collet

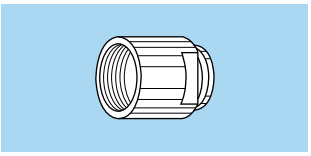

Need to be ordered

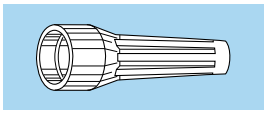

	Ref.	Collet		Need to be ordered separately (see pages 167 and 168)
		Type	Code	
0K	Z	C	10 to 50	GMA.0B.●●●.●●
1K	Z	C	15 to 65	GMA.1B.●●●.●●
		K	70 to 85	GMA.2B.●●●.●●
2K	Z	C	15 to 85	GMA.2B.●●●.●●
		K	90 to 10	GMA.3B.●●●.●●
3K	Z	C	30 to 10	GMA.3B.●●●.●●
		K	11 to 15	GMA.4B.●●●.●●
4K	Z	C	50 to 15	GMA.4B.●●●.●●

Note: All dimensions are in millimetres.

Bend relief for T series models with collet

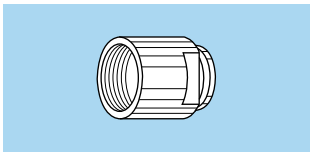

Need to be ordered

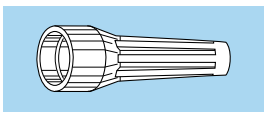

	Ref.	Collet		Need to be ordered separately (see pages 167 and 168)
		Type	Code	
TT	Z	C	27 and 31	GMB.00.●●●.●●
0T	Z	C	10 to 50	GMA.0B.●●●.●●
1T	Z	C	15 to 65	GMA.1B.●●●.●●

	Ref.	Collet		Need to be ordered separately (see pages 167 and 168)
		Type	Code	
2T	Z	C	15 and 85	GMA.2B.●●●.●●
3T	Z	C	30 to 11	GMA.3B.●●●.●●

Colour of the bridge plug shells and connectors shell made of plastic material and aluminium alloys

Ref.	Colour	Bridge plug and plastic shell			Aluminium alloys	
		PSU	PPSU	PA.6	Anodized colour	Anodized colour for bend relief collet nut
A	blue			●	●	
B	white	●		●		
G	grey	●		●		
J	yellow			●	●	
M	brown			●		
N	black			●	●	
R	red			●	●	
S	orange			●		
T	natural				●	
V	green			●	●	
L	black					●
X	natural					●
F	cream		●			

Note: other anodizing colours are available for connectors with collet nut for bend relief. Please consult us.

Watertight and vacumtight socket and coupler models (B, K and T series)

	Reference		Model
	Watertight	Vacuumtight	
B	P	PV	YH●, HG●, HN●, HH●, HC●, HE●, HM●, S●●
K	P	PV	HG●, HE●, S●●
T	P	PV	HG●, HE●, HM●

O-ring and gasket material (K and T series)

Standard connectors are delivered with silicone o-ring and gaskets. The vacuumtight models, identified with the letter «PV», are delivered with Viton® gaskets. Other gaskets material can be delivered upon special request.

Ref.	O-ring material
H	FPM (Viton®)
E	EPDM
D	FPM (Viton®) and collet nut for bend relief

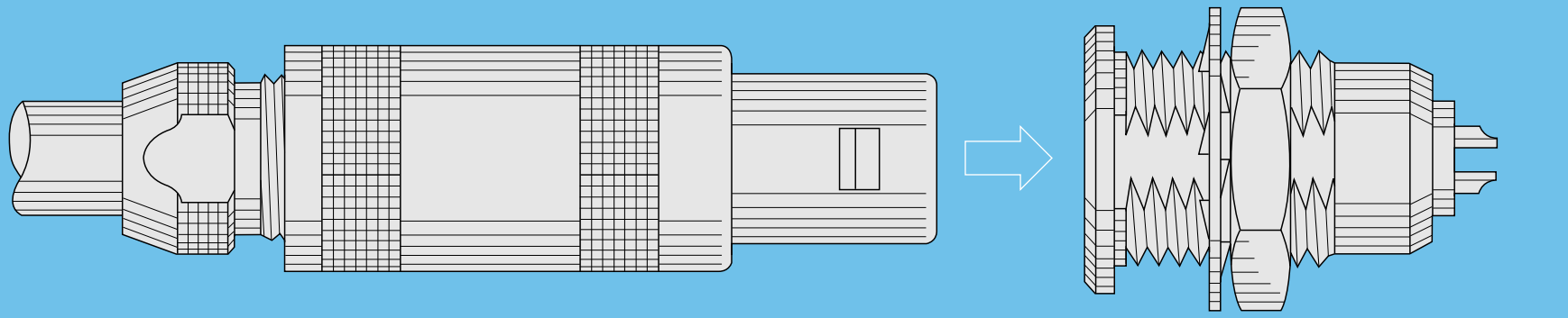

S SERIES

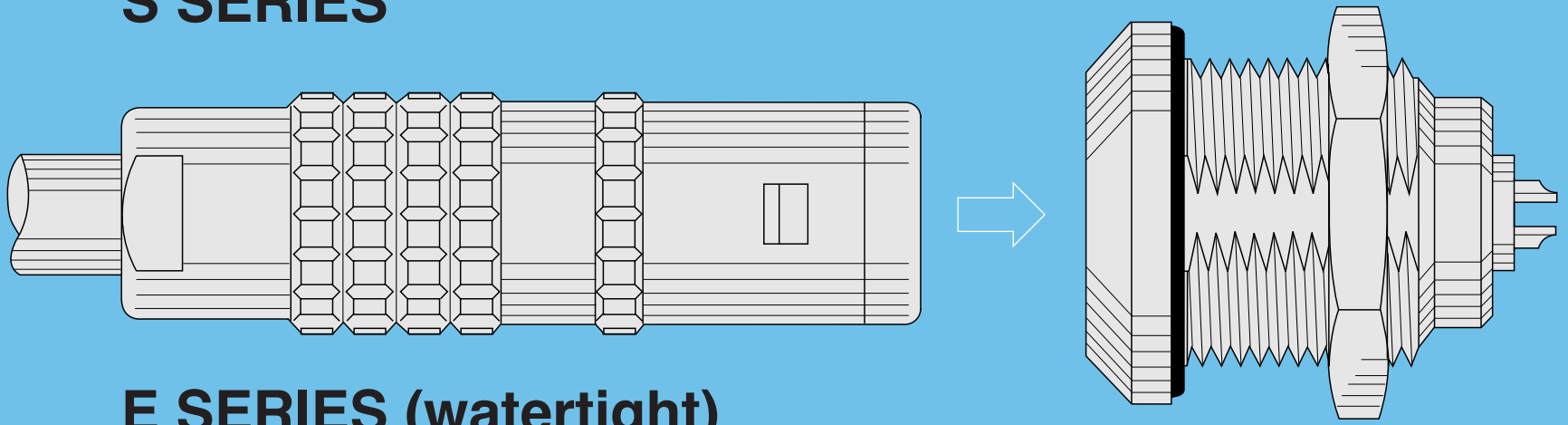

E SERIES (watertight)

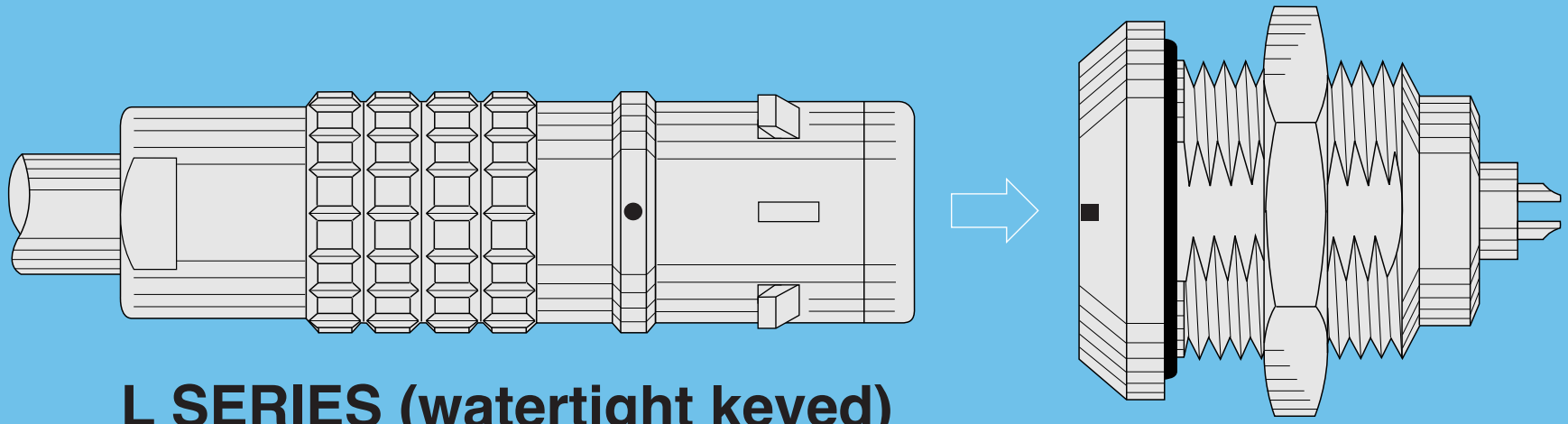

L SERIES (watertight keyed)

S Series

S series connectors have main features as follows:
– security of the Push-Pull self-latching system
– unipole types transmitting current up to 230 A and multipole types with up to 106 contacts
– 360° screening for full EMC shielding.
– solder or print contacts (straight or elbow)
– polarisation by stepped insert (half-moon) fitted with male and female contacts

Metal housing models (page 76)

Fixed plug

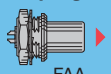
FAA

Elbow plugs

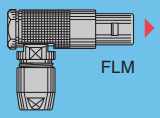
FLM

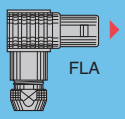
FLA

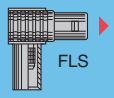
FLS

Straight plugs

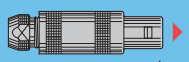
FFA, FFP*

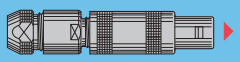
FFA

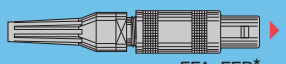
FFA, FFP*

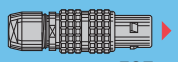
FGZ

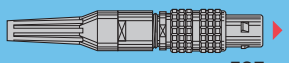
FGZ

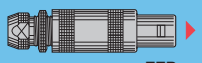
FFB

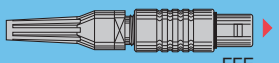
FFE

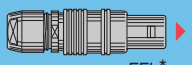
FFL*

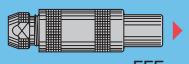
FFF

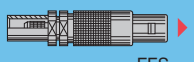
FFS

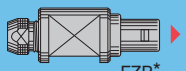
FZP*

Fixed sockets

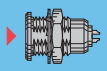
ERA

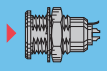
ERN

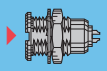
ERC

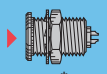
ERS*

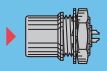
EHP

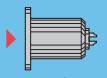
EBD*

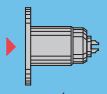
EBS*

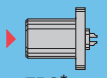
EBC*

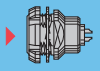
EEP

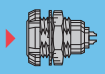
ERD

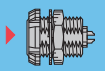
ECP

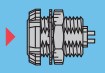
ECP

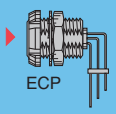
ECP

Free coupler

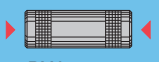
RMA

Fixed coupler

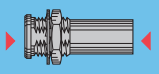
RAD

Free sockets

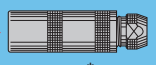
PCA, PCP*

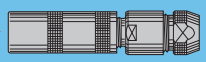
PCA

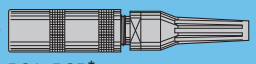
PCA, PCP*

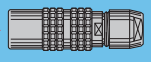
PGZ

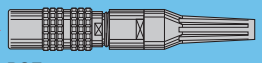
PGZ

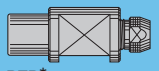
PZP*

Fixed sockets

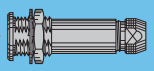
PSA, PSP

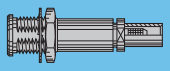
PSS

T-plug

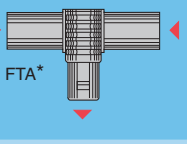
FTA*

Note: * Contact LEMO for details.

Elbow socket models (page 87)

Elbow sockets

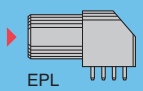
EPL

EXP

Plastic housing models (page 89)

Straight plugs

FFA, FFP

FFP

FFL

Fixed socket

ERN

Watertight or vacuumtight models (page 91)

Fixed sockets

HGP

EWB

HCP

HGW

Fixed coupler

SWH

Part Numbering System

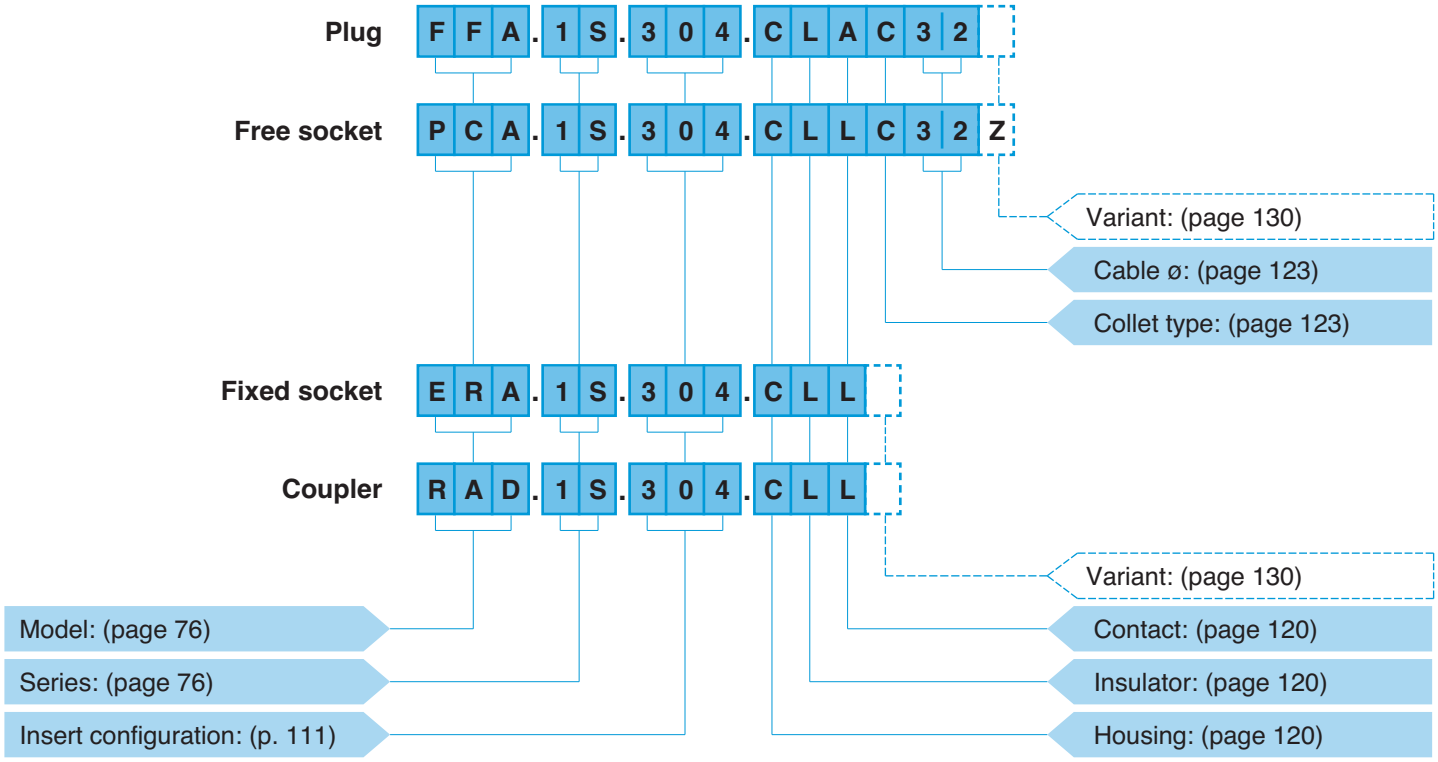

FFA.1S.304.CLAC32 = straight plug with cable collet, 1S series, multipole type with 4 contacts, outer shell in chrome-plated brass, PEEK insulator, 2 male and 2 female solder contacts, C type collet for a 3.2 mm diameter cable.

PCA.1S.304.CLLC32Z = free socket, with cable collet, 1S series, multipole type with 4 contacts, outer shell in chrome-plated brass, PEEK insulator, 2 female and 2 male solder contacts, C type collet for a 3.2 mm diameter cable and nut for fitting a bend relief.

ERA.1S.304.CLL = fixed socket, nut fixing, 1S series, multipole type with 4 contacts, outer shell in chrome-plated brass, PEEK insulator, 2 female and 2 male solder contacts.

RAD.1S.304.CLL = straight coupler, nut fixing, 1S series, multipole type with 4 contacts, outer shell in chrome-plated brass, PEEK insulator, 2 female and 2 male contacts each end.

Part Section Showing Internal Components

Fixed socket

1. outer shell
2. earthing crown
3. retaining ring
4. hexagonal nut
5. locking washer
6. insulator
7. male contact
8. female contact

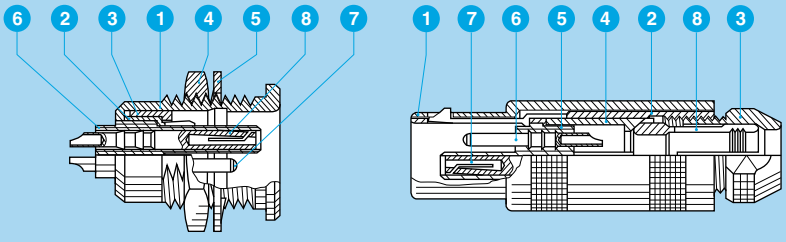

Straight plug

1. outer shell
2. latch sleeve
3. collet nut
4. centre-piece
5. insulator
6. male contact
7. female contact
8. collet

Metal housing models

Technical Characteristics

Mechanical and Climatical

Characteristics	Value	Standard
Endurance	> 5000 cycles	IEC 60512-5 test 9a
Humidity	up to 95% at 60° C	
Temperature range	- 55° C, + 250° C	
Resistance to vibrations	10-2000 Hz, 15g	IEC 60512-4 test 6d
Shock resistance	100 g, 6 ms	IEC 60512-4 test 6c
Salt spray corrosion test	> 1000h	IEC 60512-6 test 11f
Protection index (mated)	IP 50	IEC 60529
Climatical category	55/175/21	IEC 60068-1

Electrical

Characteristics		Value	Standard
Shielding efficiency	at 10 MHz	> 75 dB	IEC 60169-1-3
	at 1 GHz	> 40 dB	IEC 60169-1-3

Note:
The various tests have been carried out with FFA and ERA connector pairs, with chrome-plated brass shell and PEEK insulator.
Detailed electrical characteristics, as well as materials and treatment are presented in the chapter Technical Characteristics on page 205.

FFA Straight plug, cable collet



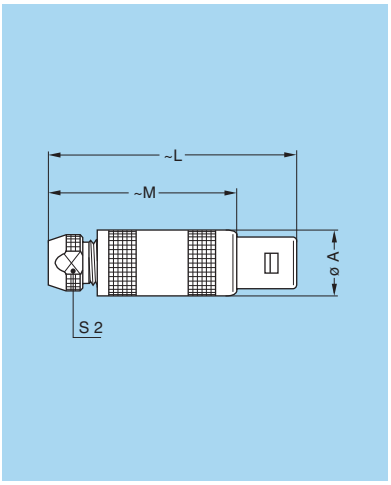

Reference		Dimensions (mm)			
Model	Series	A	L	M	S2
FFA	**00**	6.4	26.0	18.0	4.5
FFA	**0S**	9.0	34.5	24.5	6.5
FFA	**1S**	12.0	42.5	31.5	8.5
FFA	**2S**	14.8	52.0	40.0	11.0
FFA	**3S**	17.8	61.0	46.0	14.0
FFA	**4S**	24.8	77.0	59.0	19.0
FFA	**5S**	35.0	103.0	78.0	29.0
FFA	**6S**	46.0	106.0	81.0	38.0

M1 Cable assembly (pages 197 to 199)

FFA Straight plug with oversize cable collet [1)]



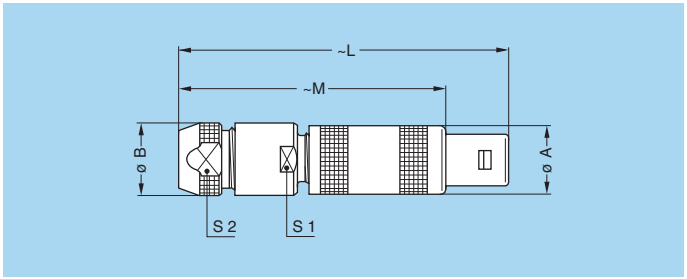

Reference		Dimensions (mm)					
Model	Series	A	B	L	M	S1	S2
FFA	**00**	6.4	8.0	34.0	26.0	7.0	6.5
FFA	**0S**	9.0	10.0	45.5	35.5	9.0	8.5
FFA	**1S**	12.0	13.0	57.0	46.0	12.0	11.0
FFA	**2S**	14.8	18.0	67.0	55.0	14.0	14.0
FFA	**3S**	17.8	21.0	85.0	70.0	19.0	19.0
FFA	**4S**	24.8	31.8	107.0	89.0	28.5	29.0
FFA	**5S**	35.0	41.8	138.0	113.0	37.5	38.0

M2 Cable assembly (pages 197 and 200)

Note: [1)] correspond to K type of collet, the fitting of oversize collets onto this model allows them to be fitted to the cables that can be accommodated by the next housing size up (see page 123).

FFA Straight plug, cable collet and nut for fitting a bend relief [1)]

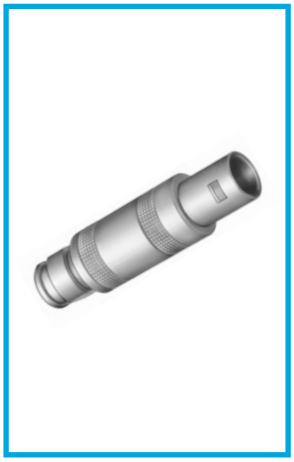

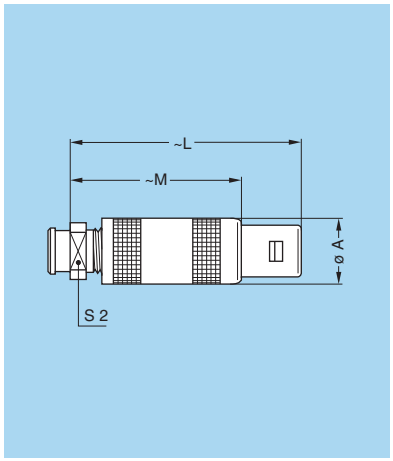

Reference		Dimensions (mm)			
Model	Series	A	L	M	S2
FFA	**00**	6.4	26.0	18.0	6
FFA	**0S**	9.0	34.5	24.5	7
FFA	**1S**	12.0	42.5	31.5	9
FFA	**2S**	14.8	52.0	40.0	12
FFA	**3S**	17.8	61.0	46.0	14
FFA	**4S**	24.8	77.0	59.0	20

M1 Cable assembly (pages 197 and 198)

Note: [1)] to order, add a «Z» at the end of the reference.
The bend relief must be ordered separately (see page 167).

FGZ Straight plug, cable collet



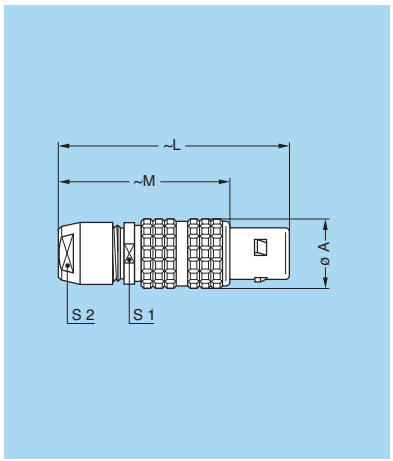

Reference		Dimensions (mm)				
Model	Series	A	L	M	S1	S2
FGZ	**0S**	9.5	36	26	8	7
FGZ	**1S**	12.0	43	32	10	9
FGZ	**2S**	15.0	50	38	13	12

M1 Cable assembly (page 191)

Note: D type collets of the B series are used in this model (see page 67).

FGZ Straight plug, cable collet and nut for fitting a bend relief [1)]



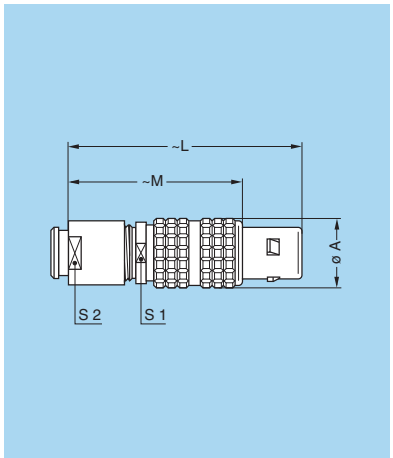

Reference		Dimensions (mm)				
Model	Series	A	L	M	S1	S2
FGZ	**0S**	9.5	35	25	8	7
FGZ	**1S**	12.0	42	31	10	9
FGZ	**2S**	15.0	49	37	13	12

M1 Cable assembly (page 191)

Note: D type collets of the B series are used in this model (see page 67).

Note: [1)] to order, add a «Z» at the end of the reference.
The bend relief must be ordered separately (see page 167).

FFB Straight plug, cable collet and safety locking ring



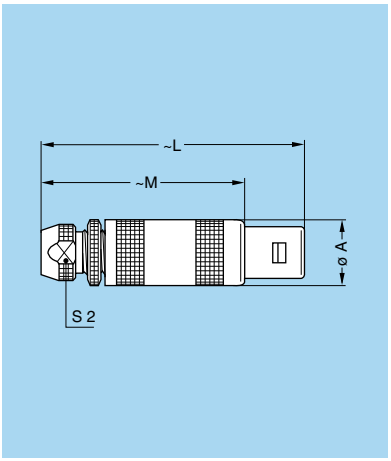

Reference		Dimensions (mm)			
Model	Series	A	L	M	S2
FFB	**0S**	9.0	36.8	26.8	6.5
FFB	**1S**	12.0	45.0	34.0	8.5
FFB	**2S**	14.8	55.5	43.5	11.0
FFB	**3S**	17.8	65.0	50.0	14.0

M1 Cable assembly (pages 197 and 198)

Note: nut for fitting a bend relief (available only for size 1S).

FFE Straight plug, cable collet, front seal and nut for fitting a bend relief [1] (protected to IP54 when mated)



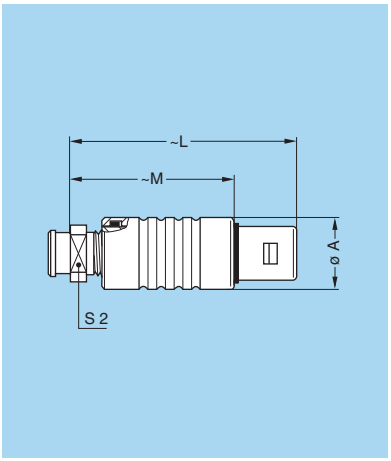

Reference		Dimensions (mm)			
Model	Series	A	L	M	S2
FFE	**00**	7.4	26.0	18.0	6
FFE	**0S**	10.0	34.5	24.5	7
FFE	**1S**	13.0	42.5	31.5	9
FFE	**2S**	16.0	52.0	40.0	12
FFE	**3S**	19.0	61.0	46.0	14

M1 Cable assembly (pages 197 and 198)

Note: [1] to order, add a «Z» at the end of the reference.
The bend relief must be ordered separately (see page 167).

FFF Straight plug, non-latching, cable collet



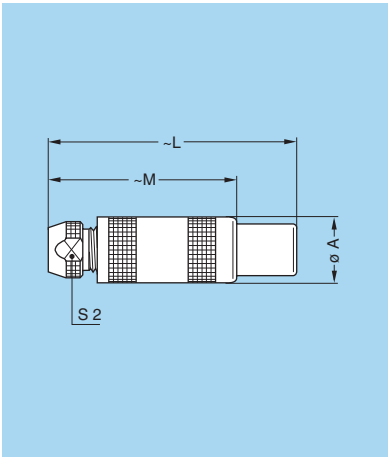

Reference		Dimensions (mm)			
Model	Series	A	L	M	S2
FFF	**00**	6.4	26.0	18.0	4.5
FFF	**0S**	9.0	34.5	24.5	6.5
FFF	**1S**	12.0	42.5	31.5	8.5
FFF	**2S**	14.8	52.0	40.0	11.0

M1 Cable assembly (pages 197 and 198)

FFS Straight plug for cable crimping



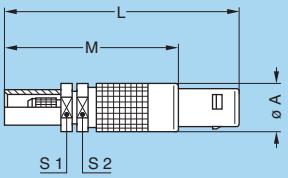

Reference		Dimensions (mm)				
Model	Series	A	L	M	S1	S2
FFS	**00**	6.4	31	23	5.5	5.5

M5 Cable assembly (page 197)

Note: Model available only with crimp backnut E31 similar to 00.250 series.

FAA Fixed plug non-latching, nut fixing



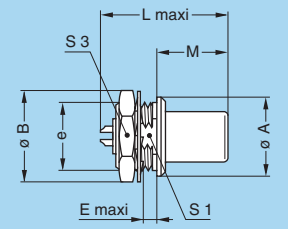

Reference		Dimensions (mm)								
Model	Series	A	B	e	E	L	L[1)]	M	S1	S3
FAA	**00**	8	10.2	M7x0.5	2.0	–	15.5	9.0	6.3	9
FAA	**0S**	10	12.4	M9x0.6	2.0	18.5	18.0	11.2	8.2	11
FAA	**1S**	14	15.8	M12x1.0	2.5	22.5	21.7	12.5	10.5	14
FAA	**2S**	18	19.2	M15x1.0	4.0	25.0	25.3	13.8	13.5	17
FAA	**3S**	22	25.0	M18x1.0	4.0	31.0	29.0	17.0	16.5	22
FAA	**4S**	28	34.0	M25x1.0	2.5	35.5	39.0	20.5	23.5	30
FAA	**5S**	40	40.0	M35x1.0	2.5	45.0	–	28.0	33.5	–
FAA	**6S**	54	54.0	M48x1.5	2.5	45.0	–	28.0	–	–

P1 Panel cut-out (page 180)

P2 Panel cut-out 6S series (page 180)

Note: [1)] unipole model

FLC/FLM Elbow (90°) plug, cable collet



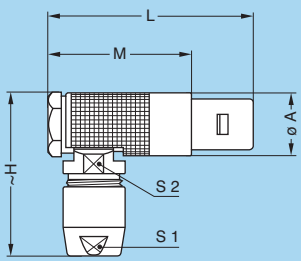

Reference		Dimensions (mm)					
Model	Series	A	H	L	M	S1	S2
FLC	**00**	7.5	16.5	19.5	11.5	4.5	6
FLM	**0S**	9.5	23.0	30.0	20.0	7.0	8
FLM	**1S**	12.0	29.0	36.0	25.0	9.0	10
FLM	**2S**	14.8	35.0	41.5	29.5	12.0	13

M3 Cable assembly (pages 197 to 199)

Note: FLC.00 model is used for the unipole type.
For 0S, 1S and 2S series use «D» type collet, see page 67.

FLA Elbow (90°) plug, cable collet

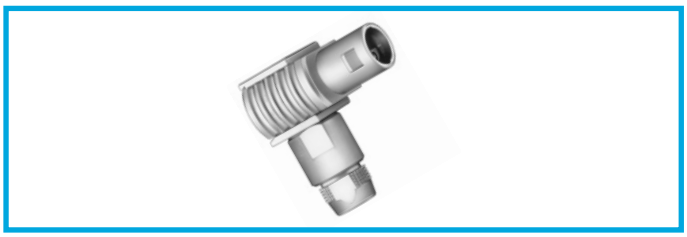

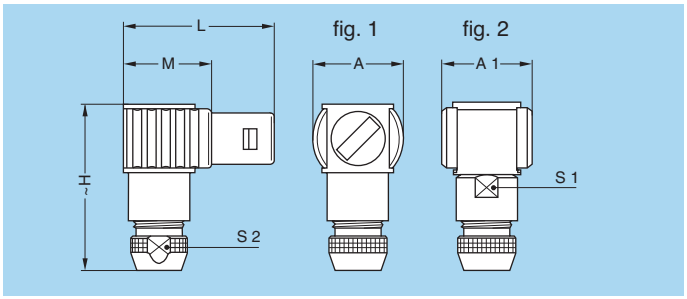

Reference		Dimensions (mm)						
Model	Series	A	A1	H	L	M	S1	S2
FLA	**3S**	21	21	44.0	38.5	23.5	15	14
FLA	**4S**	28	28	56.0	49.0	31.0	20	19
FLA	**5S**	–	37	76.5	65.0	40.0	30	29
FLA	**6S**	–	48	94.0	81.0	56.0	40	38

M3 Cable assembly (pages 197 to 199)

Note:
fig. 1 is used for the unipole type, fig. 2 is used for the multipole type.

- Maximum operating temperature: 120°C

FLS Elbow (90°) plug for cable crimping



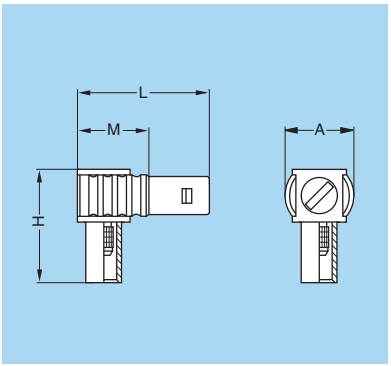

Reference		Dimensions (mm)			
Model	Series	A	H	L	M
FLS	**00**	9	16	17.5	9.5

M6 Cable assembly (page 197)

Note: Model available only with crimp backnut E31 similar to 00.250 series.

- Maximum operating temperature: 120°C

ERA Fixed socket, nut fixing



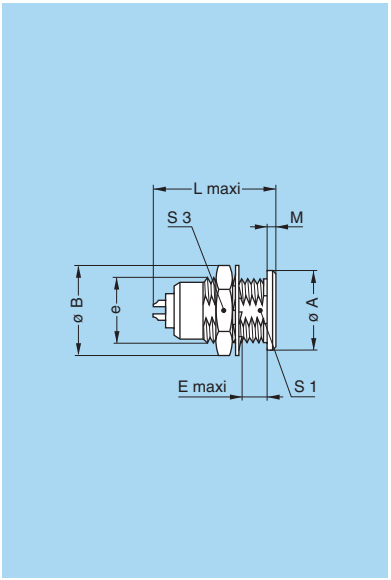

Reference		Dimensions (mm)								
Model	Series	A	B	e	E	L	L[1)]	M	S1	S3
ERA	**00**	8	10.2	M7x0.5	5.5	–	14.5	1.0	6.3	9
ERA	**0S**	10	12.4	M9x0.6	7.0	17.5	18.0	1.2	8.2	11
ERA	**1S**	14	15.8	M12x1.0	7.5	21.0	20.5	1.5	10.5	14
ERA	**2S**	18	19.2	M15x1.0	8.5	24.5	23.5	1.8	13.5	17
ERA	**3S**	22	25.0	M18x1.0	11.5	29.0	27.5	2.0	16.5	22
ERA	**4S**	28	34.0	M25x1.0	12.0	34.0	33.5	2.5	23.5	30
ERA	**5S**	40	40.0	M35x1.0	15.5	45.0	78.5	3.0	33.5	–
ERA	**6S**	54	54.0	M48x1.5	16.0	45.0	–	3.5	45.5	–

P1 Panel cut-out (page 180)

Note: [1)] unipole model.

Note: The 5S series is delivered with a tapered washer and a round nut.
The 6S series is delivered without a locking washer and with a round nut.

ERN Fixed socket, nut fixing, with earthing tag



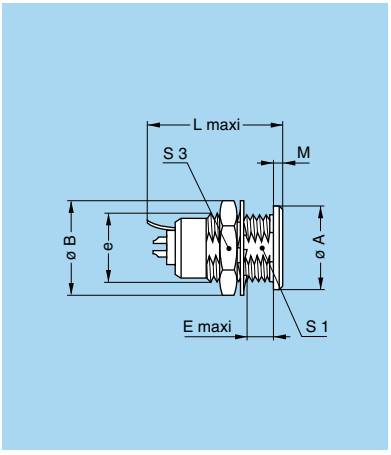

Reference		Dimensions (mm)								
Model	Series	A	B	e	E	L	L[1)]	M	S1	S3
ERN	**0S**	10	12.4	M9x0.6	7.0	19.3	19.3	1.2	8.2	11
ERN	**1S**	14	15.8	M12x1.0	7.5	22.4	22.4	1.5	10.5	14
ERN	**2S**	18	19.2	M15x1.0	8.5	26.3	26.3	1.8	13.5	17
ERN	**3S**	22	25.0	M18x1.0	11.5	29.8	29.8	2.0	16.5	22

P1 Panel cut-out (page 180)

Note: [1)] unipole model

ERC Fixed socket, nut fixing with slot in the flange



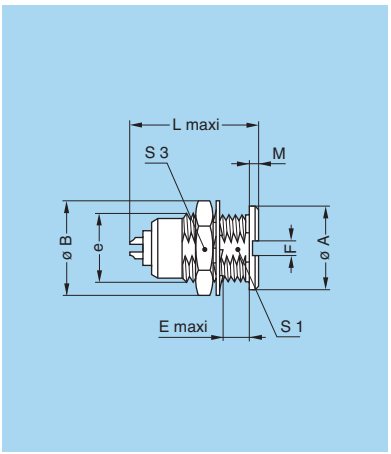

Reference		Dimensions (mm)									
Model	Series	A	B	e	E	F	L	L[1)]	M	S1	S3
ERC	**00**	8	10.2	M7x0.5	5.5	1.6	–	14.5	1.0	6.3	9
ERC	**0S**	10	12.4	M9x0.6	7.0	2.0	17.5	18.0	1.2	8.2	11
ERC	**1S**	14	15.8	M12x1.0	7.5	2.5	20.2	20.5	1.5	10.5	14

P1 Panel cut-out (page 180)

Note: [1)] unipole model.

EHP Fixed socket, nut fixing, protruding shell



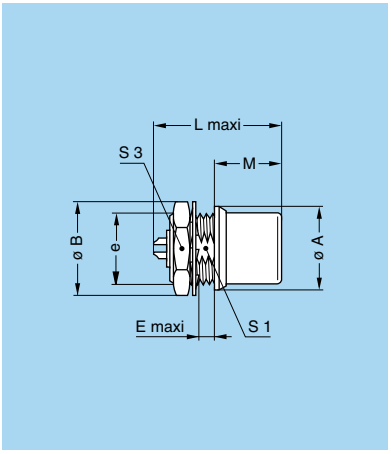

Reference		Dimensions (mm)								
Model	Series	A	B	e	E	L	L[1)]	M	S1	S3
EHP	**0S**	10	12.4	M9x0.6	2.0	20.5	18.0	12.5	8.2	11
EHP	**1S**	14	15.8	M12x1.0	3.5	20.2	20.5	12.0	–	14
EHP	**3S**	22	25.0	M18x1.0	4.0	29.0	29.0	18.7	–	22

P1 Panel cut-out 0S series (page 180)

P2 Panel cut-out (page 180)

Note: [1)] unipole model

EEP **Fixed socket, nut fixing** (back panel mounting)



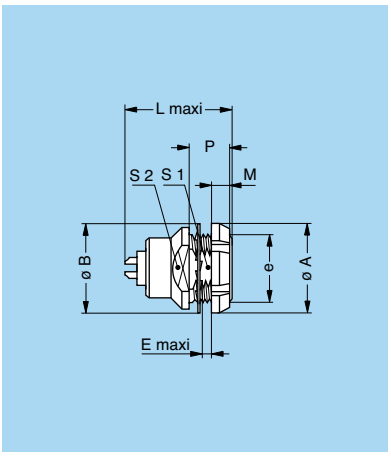

Reference		Dimensions (mm)									
Model	Series	A	B	e	E	L	L[1)]	M	P	S1	S2
EEP	**1S**	16	16.0	M12x1.0	6.5	20.2	20.5	3.5	11	10.5	13
EEP	**2S**	20	19.5	M15x1.0	4.3	24.5	23.5	3.5	9	13.5	15

P1 Panel cut-out (page 180)

Note: [1)] unipole model.

ERD **Fixed socket with two nuts** (back panel mounting)



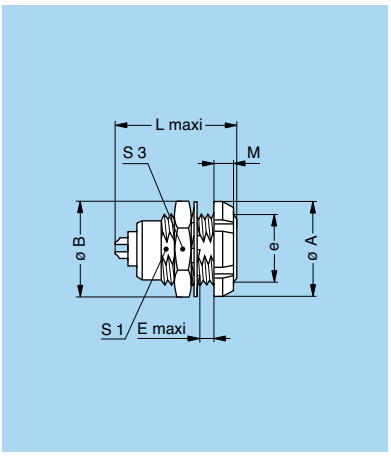

Reference		Dimensions (mm)								
Model	Series	A	B	e	E	L	L[1)]	M	S1	S3
ERD	**0S**	12	12.4	M9x0.6	5.5	17.5	18.0	2.5	8.2	11
ERD	**1S**	16	15.8	M12x1.0	6.0	20.2	20.5	3.5	10.5	14
ERD	**2S**	20	19.2	M15x1.0	6.5	24.5	23.5	3.5	13.5	17
ERD	**3S**	24	25.0	M18x1.0	9.0	29.0	27.5	4.5	16.5	22
ERD	**4S**	30	34.0	M25x1.0	10.0	34.0	33.5	4.5	23.5	30

P1 Panel cut-out (page 180)

Note: [1)] unipole model.

Note: The 3S and 4S series are delivered with a conical nut.

ECP **Fixed socket with two nuts, long threaded shell** (back panel mounting)



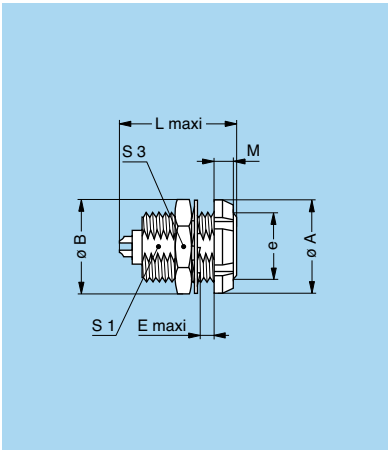

Reference		Dimensions (mm)								
Model	Series	A	B	e	E	L	L[1)]	M	S1	S3
ECP	**0S**	12	12.4	M9x0.6	8.5	17.5	18.5	2.5	8.2	11
ECP	**1S**	16	15.8	M12x1.0	10.0	20.2	21.5	3.5	10.5	14
ECP	**2S**	20	19.2	M15x1.0	11.0	24.5	26.0	3.5	13.5	17
ECP	**3S**	24	25.0	M18x1.0	14.0	29.0	30.0	4.5	16.5	22

P1 Panel cut-out (page 180)

Note: [1)] unipole model.

Note: The 3S series is delivered with a conical nut.

ECP Fixed socket with two nuts, long threaded shell, straight contact for printed circuit (back panel mounting)



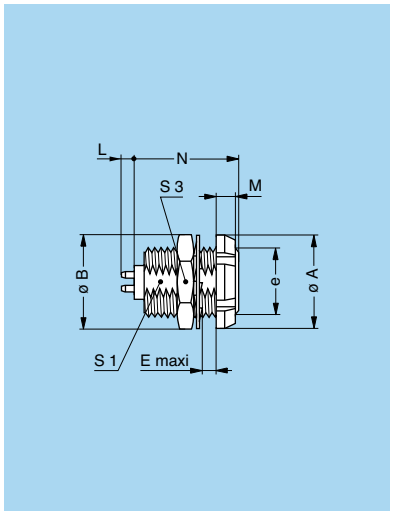

Reference		Dimensions (mm)							
Model	Series	A	B	e	E	M	N	S1	S3
ECP	0S	12	12.4	M9x0.6	8.5	2.5	15.0	8.2	11
ECP	1S	16	15.8	M12x1.0	10.0	3.5	17.5	10.5	14
ECP	2S	20	19.2	M15x1.0	11.0	3.5	20.0	13.5	17
ECP	3S	24	25.0	M18x1.0	14.0	4.5	24.0	16.5	22

P1 Panel cut-out (page 180)

P21 PCB drilling pattern (page 188)

Note: The 3S series is delivered with a conical nut.

Note: this contact type is available for all E●● socket models.
See page 189 for table of available types.
Length «L» depends on the number of contacts, see table on page 189.

ECP Fixed socket with two nuts, long threaded shell, elbow (90°) contacts for printed circuit (back panel mounting)



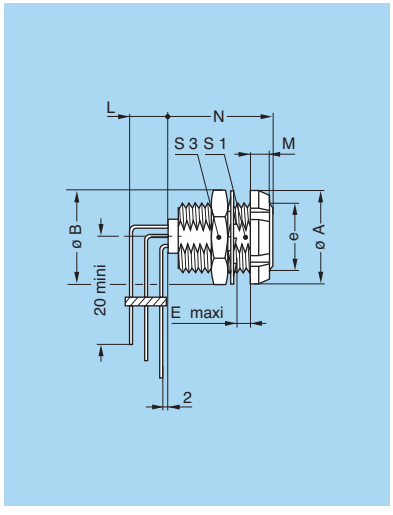

Reference		Dimensions (mm)							
Model	Series	A	B	e	E	M	N	S1	S3
ECP	0S	12	12.4	M9x0.6	8.5	2.5	15.0	8.2	11
ECP	1S	16	15.8	M12x1.0	10.0	3.5	17.5	10.5	14
ECP	2S	20	19.2	M15x1.0	11.0	3.5	20.0	13.5	17
ECP	3S	24	25.0	M18x1.0	14.0	4.5	24.0	16.5	22

P1 Panel cut-out (page 180)

P24 PCB drilling pattern (page 190)

Note: The 3S series is delivered with a conical nut.

Note: this contact type is available for all back panel mounting socket types. See page 190 for available types.
Length «L» depends on the number of contacts, see PCB drilling pattern on page 190.

PCA Free socket, cable collet



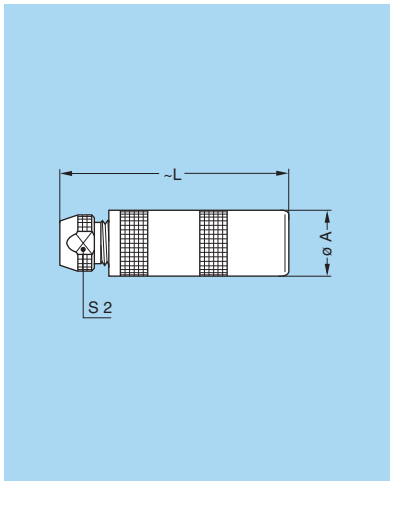

Reference		Dimensions (mm)		
Model	Series	A	L	S2
PCA	00	6.5	25.0	4.5
PCA	0S	8.9	33.5	6.5
PCA	1S	11.9	40.5	8.5
PCA	2S	14.8	50.0	11.0
PCA	3S	17.8	59.0	14.0
PCA	4S	24.8	75.0	19.0
PCA	5S	34.7	99.0	29.0
PCA	6S	46.0	102.0	38.0

M1 Cable assembly (pages 197 to 199)

PCA Free socket with oversize cable collet [1)]

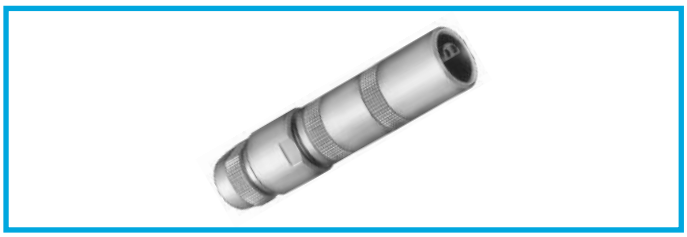

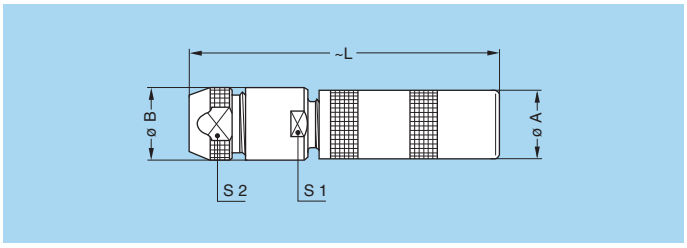

Reference		Dimensions (mm)				
Model	Series	A	B	L	S1	S2
PCA	**00**	6.5	8.0	33.0	7.0	6.5
PCA	**0S**	8.9	10.0	44.5	9.0	8.5
PCA	**1S**	11.9	13.0	55.0	12.0	11.0
PCA	**2S**	14.8	18.0	65.0	14.0	14.0
PCA	**3S**	17.8	21.0	83.0	19.0	19.0
PCA	**4S**	24.8	31.8	105.0	28.5	29.0

M2 Cable assembly (pages 197 and 200)

Note: [1)] correspond to K type of collet, the fitting of oversize collets onto this model allows them to be fitted to the cables that can be accommodated by the next housing size up (see page 123).

PCA Free socket, cable collet and nut for fitting a bend relief [1)]



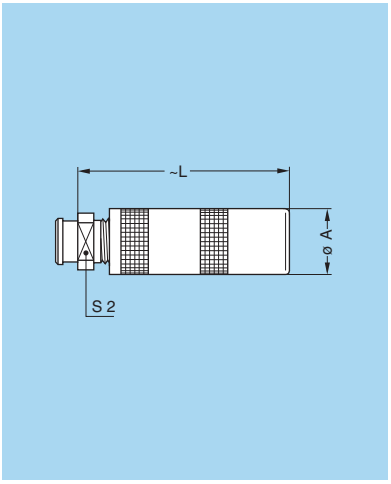

Reference		Dimensions (mm)		
Model	Series	A	L	S2
PCA	**00**	6.5	25.0	6
PCA	**0S**	8.9	33.5	7
PCA	**1S**	11.9	40.5	9
PCA	**2S**	14.8	50.0	12
PCA	**3S**	17.8	59.0	14
PCA	**4S**	24.8	75.0	20

M1 Cable assembly (pages 197 and 198)

Note: [1)] to order, add a «Z» at the end of the reference.
The bend relief must be ordered separately (see page 167).

PGZ Free socket, cable collet



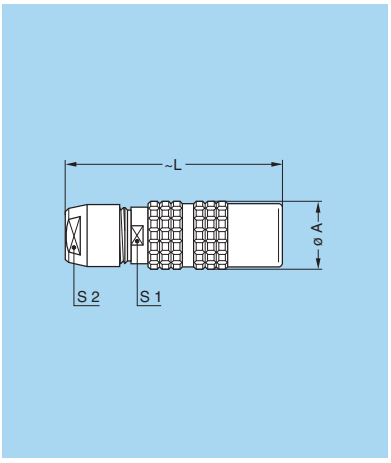

Reference		Dim. (mm)			
Model	Series	A	L	S1	S2
PGZ	**0S**	9.5	35.5	8	7
PGZ	**1S**	12.5	40.5	10	9
PGZ	**2S**	16.5	47.0	13	12

M1 Cable assembly (page 191)

Note: D type collets of the B series are used in this model (see page 67).

PGZ Free socket, cable collet and nut for fitting a bend relief [1)]



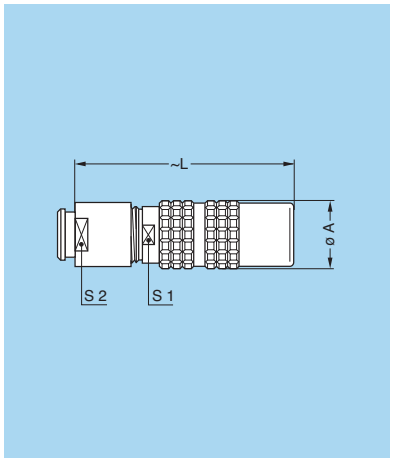

Reference		Dim. (mm)			
Model	Series	A	L	S1	S2
PGZ	**0S**	9.5	34.5	8	7
PGZ	**1S**	12.5	39.5	10	9
PGZ	**2S**	16.5	46.0	13	12

M1 Cable assembly (page 191)

Note: D type collets of the B series are used in this model (see page 67).

Note: [1)] to order, add a «Z» at the end of the reference.
The bend relief must be ordered separately (see page 167).

PSA Fixed socket, nut fixing, cable collet



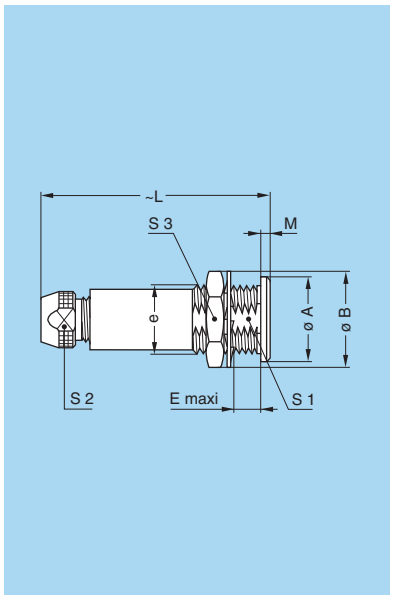

Reference		Dimensions (mm)								
Model	Series	A	B	e	E	L	M	S1	S2	S3
PSA	**00**	8	10.2	M7x0.5	5.5	25.0	1.0	6.3	4.5	9
PSA	**0S**	10	12.4	M9x0.6	7.0	33.5	1.2	8.2	6.5	11
PSA	**1S**	14	15.8	M12x1.0	7.5	40.5	1.5	10.5	8.5	14
PSA	**2S**	18	19.2	M15x1.0	8.5	50.0	1.8	13.5	11.0	17
PSA	**3S**	22	25.0	M18x1.0	11.5	59.0	2.0	16.5	14.0	22
PSA	**4S**	28	34.0	M25x1.0	12.0	75.0	2.5	23.5	19.0	30
PSA	**5S**	40	40.0	M35x1.0	15.5	99.0	3.0	33.5	29.0	–
PSA	**6S**	54	54.0	M48x1.5	16.0	102.0	3.5	45.5	38.0	–

M1 Cable assembly (pages 197 to 199)

P1 Panel cut-out (page 180)

Note: the 5S series is delivered with a tapered washer and a round nut.
The 6S series is delivered without a locking washer and with a round nut.

PSP Fixed socket, nut fixing, cable collet and inner anti-rotating device



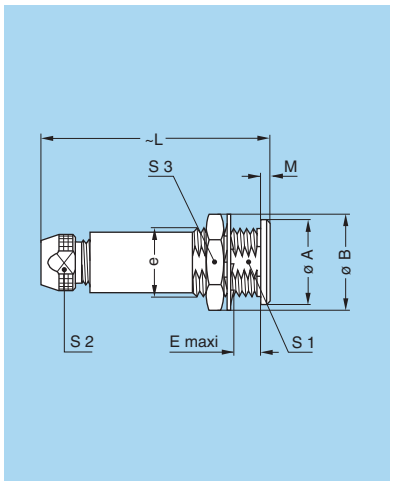

Reference		Dimensions (mm)								
Model	Series	A	B	e	E	L	M	S1	S2	S3
PSP	**2S**	18	19.2	M15x1.0	8.5	50.0	1.8	13.5	11.0	17
PSP	**3S**	22	25.0	M18x1.0	11.5	59.0	2.0	16.5	14.0	22
PSP	**4S**	28	34.0	M25x1.0	12.0	75.0	2.5	23.5	19.0	30

M1 Cable assembly (pages 197 and 198)

P1 Panel cut-out (page 180)

PSS Free socket, nut fixing for cable crimping



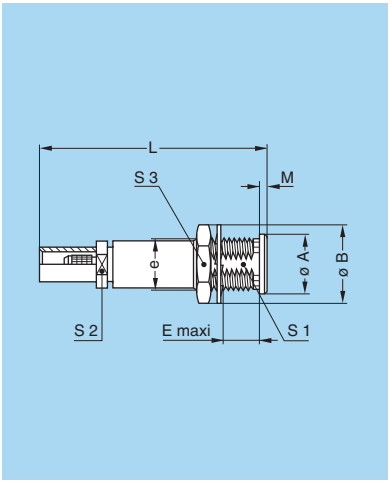

Reference		Dimensions (mm)								
Model	Series	A	B	e	E	L	M	S1	S2	S3
PSS	**00**	8	10.2	M7x0.5	5.5	30	1	6.3	5.5	9

M5 Cable assembly (page 197)

P1 Panel cut-out (page 180)

Note: Model available only with crimp backnut E31 similar to 00.250 series.

RMA Free coupler



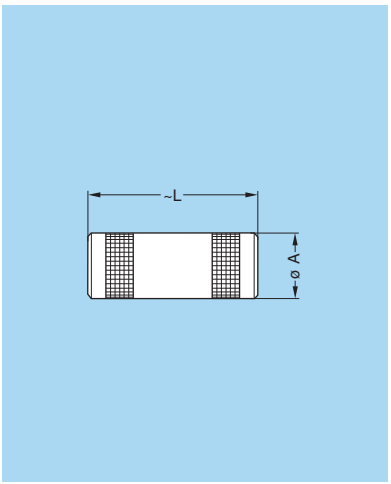

Reference		Dim. (mm)	
Model	Series	A	L
RMA	**00**	6.4	22.0
RMA	**0S**	8.9	25.0
RMA	**1S**	11.9	28.5
RMA	**2S**	14.8	31.5
RMA	**3S**	17.8	38.5
RMA	**4S**	24.8	46.5
RMA	**5S**	34.7	60.5

Note: see page 122 for the available plug and contact configurations and in order to ensure correct contact alignment.

RAD Fixed coupler, nut fixing



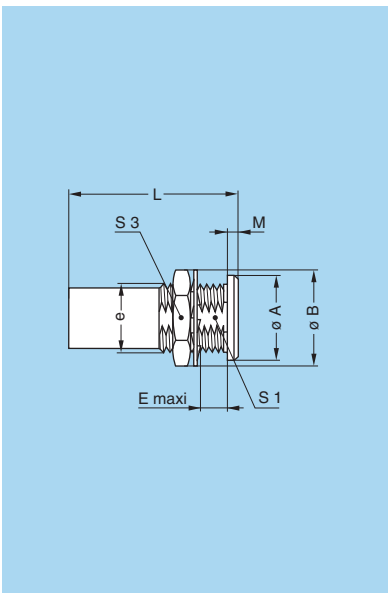

Reference		Dimensions (mm)							
Model	Series	A	B	e	E	L	M	S1	S2
RAD	**00**	8	10.2	M7x0.5	5.5	22.0	1.0	6.3	9
RAD	**0S**	10	12.4	M9x0.6	7.0	25.0	1.2	8.2	11
RAD	**1S**	14	15.8	M12x1.0	7.5	28.5	1.5	10.5	14
RAD	**2S**	18	19.2	M15x1.0	8.5	31.5	1.8	13.5	17
RAD	**3S**	22	25.0	M18x1.0	11.5	38.5	2.0	16.5	22
RAD	**4S**	28	34.0	M25x1.0	12.0	46.5	2.5	–	30
RAD	**5S**	40	40.0	M35x1.0	15.5	60.5	3.0	–	–

P1 Panel cut-out (page 180)

P2 Panel cut-out 4S and 5S series (page 180)

Note: the 5S series is delivered with a tapered washer and a round nut.

Note: See page 122 for the available plug and contact configurations and in order to ensure correct contact alignment.

Elbow socket models

Technical Characteristics

Types

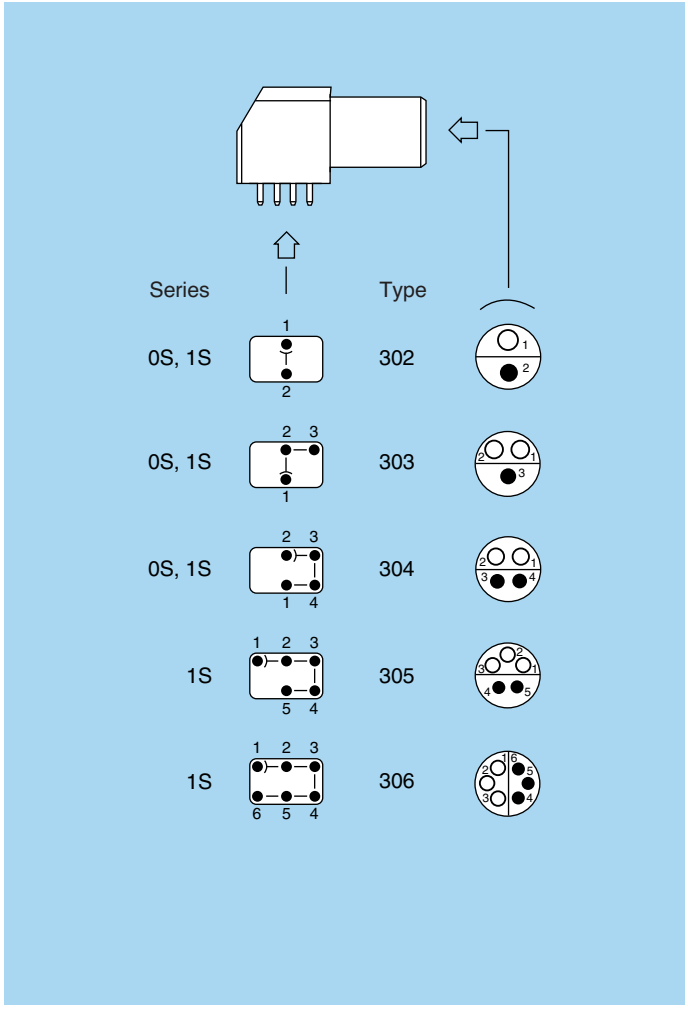

Materials and Treatment

Component	Material	Surface Treat. (µm)		
		Cu	Ni	Au
Housing	PPS [1]	–		
	Brass	0.5	3	–
Metallic parts	Brass	0.5	3	–
Earthing crown	Bronze	0.5	3	–
Insulator	PEEK	–		
Female contact	Bronze	0.5	3	1.5

Note: [1] not used for all sizes.
The surface treatment standards are as follows:
– Nickel SAE AMS QQ N 290
– Gold: ISO 27874

Electrical

Model	Series	Types	Test voltage (kV rms)[1]	Rated current (A)
EPL	**0S**	302-303-304	1.20	4.5
EXP	**0S**			
EPL	**1S**	302-303-304	1.20	4.5
EXP	**1S**			
EPL	**1S**	305-306	0.70	4.5
EXP	**1S**			

Note: [1] see calculation method, caution and suggested standard on page 213.

EPL Elbow (90°) socket for printed circuit (solder or screw fixing)

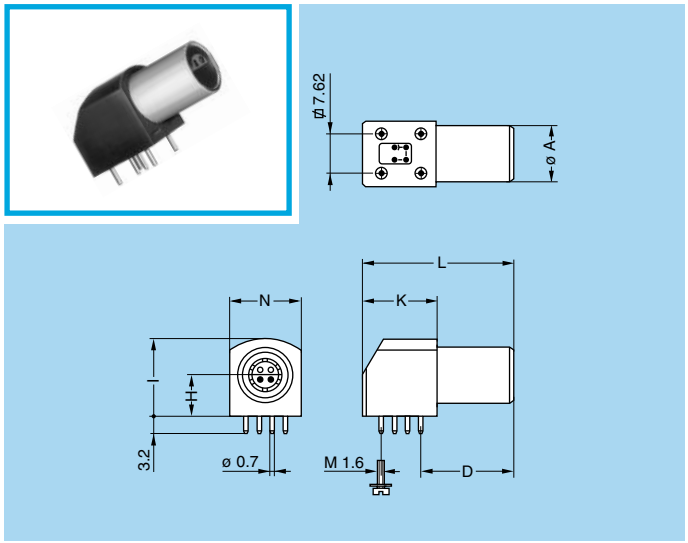

Part number	Dimensions (mm)						
	A	D	H	I	K	L	N
EPL.0S.302.HLN	9	14.6	6.7	12.6	13.3	25	11.7
EPL.0S.303.HLN							
EPL.0S.304.HLN							
EPL.1S.302.HLN	11	16.6	7.5	14.0	13.3	27	12.6
EPL.1S.303.HLN							
EPL.1S.304.HLN							
EPL.1S.305.HLN							
EPL.1S.306.HLN							

Note: to replace the 4 ground pins by 4 screws (M1.6) add an «S» to the end of the part number. (e.g.: EPL.1S.303.HLNS)

P22 PCB drilling pattern (page 190)

EPL Elbow (90°) socket for printed circuit



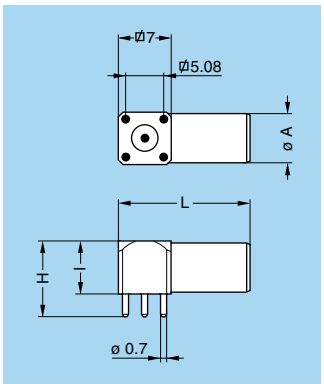

Part number	Dimensions (mm)		
	A	H	I
EPL.00.113.NLN	6.8	10	7

P23 PCB drilling pattern (page 190)

EPL Elbow (90°) socket for printed circuit

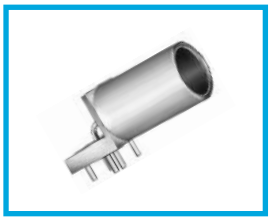

Part number	Dimensions (mm)						
	A	D	H	I	K	L	N
EPL.0S.116.DTL	8.8	16	12	9	7.7	22.7	9

Note: available only in unipole version.

P23 PCB drilling pattern (page 190)

EXP Elbow (90°) socket for printed circuit with two nuts (solder or screw fixing)

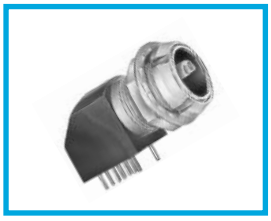

Part number	Dimensions (mm)											
	A	B	D	e	E	H	I	K	L	M	N	S3
EXP.0S.302.HLN	12	12.4	14.6	M9x0.6	6.0	6.7	12.6	13.3	25	2.5	11.7	11
EXP.0S.303.HLN												
EXP.0S.304.HLN												
EXP.1S.302.HLN	14	15.0	16.6	M11x0.5	7.5	7.5	14.0	13.3	27	3.5	12.6	13
EXP.1S.303.HLN												
EXP.1S.304.HLN												
EXP.1S.305.HLN												
EXP.1S.306.HLN												

Note: to replace the 4 ground pins by 4 screws (M1.6) add an «S» to the end of the part number. (e.g.: EXP.1S.303.HLNS).

P2 Panel cut-out 0S series (page 180)

P10 Panel cut-out 1S series (page 180)

P22 PCB drilling pattern (page 190)

Plastic housing models

These connectors are particularly recommended for all applications requiring maximum electrical insulation when mated. The design, including a latch sleeve and a metal earthing crown, guarantees EMC screening efficiency to meet most requirements.

Technical Characteristics

Mechanical and Climatical

Characteristics	Value				Standard
	PEEK	POM	PSU	PPSU	
Colour	natural (beige)	black	white or grey	cream	–
Endurance	> 5000 cycles	> 5000 cycles	> 5000 cycles	> 5000 cycles	IEC 60512-5 test 9a
Humidity	up to 95% at 60° C				–
Temperature range	- 50° C/+ 250° C	- 50° C/+ 115° C	- 50° C/+ 150° C	- 50° C/+ 180° C	–
Sterilization resistance[1)]	> 200 cycles	none	~20 cycles	> 100 cycles	IEC 60601-1 § 44.7
Resistance to organic solvents	very good	very good	limited	good	–

Note: 1) Steam sterilization

FFA Straight plug, cable collet, PEEK or POM outer shell

FFP Straight plug, cable collet, PEEK or POM outer shell and inner anti-rotating device



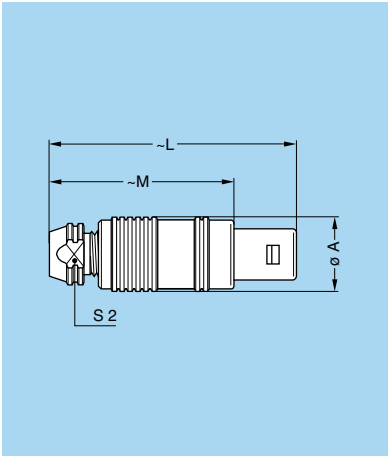

Reference		Dimensions (mm)			
Model	Series	A	L	M	S2
FFA	**00**	7	33.5	25.5	6
FFP	**1S**	12	42.5	31.5	10
FFP	**2S**	15	52.0	40.0	12
FFP	**3S**	18	61.0	46.0	14

M1 Cable assembly (pages 197 and 198)

FFP Straight plug, cable collet, PEEK or POM outer shell, inner anti-rotating device and nut for fitting a bend relief [1)]



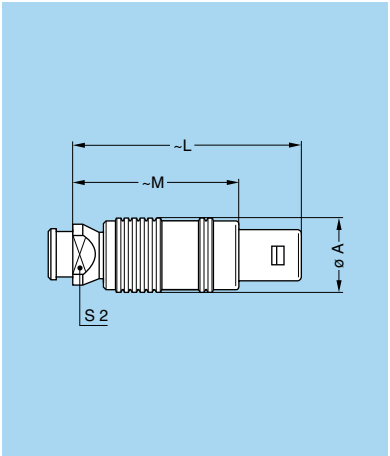

Reference		Dimensions (mm)			
Model	Series	A	L	M	S2
FFP	**1S**	12	41.5	30.5	10
FFP	**2S**	15	51.0	39.0	12
FFP	**3S**	18	61.0	46.0	14

M1 Cable assembly (pages 197 and 198)

Note: 1) to order, add a «Z» at the end of the reference.
The bend relief must be ordered separately (see page 167).

FFL Straight plug, cable collet, with PSU and PPSU outer shell, inner anti-rotating device and nut for fitting a bend relief [1)]



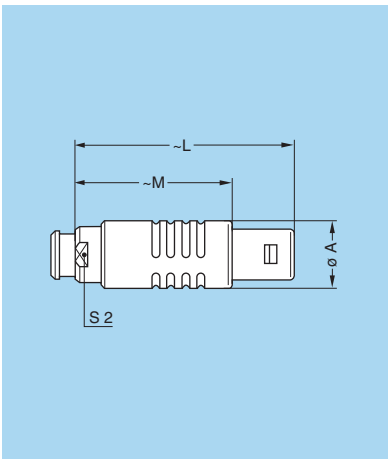

Reference		Dimensions (mm)			
Model	Series	A	L	M	S2
FFL	**2S**	16.5	51.5	39.5	13

M4 Cable assembly (page 199)

Note: [1)] to order, add a «Z» at the end of the reference.
The bend relief must be ordered separately (see page 167).

Note: This model is fitted with a «D or M» type collet system. It is also adapted for crimp contacts. Available only for multipole.

ERN Fixed socket, nut fixing, with earthing tag, PEEK or POM outer shell



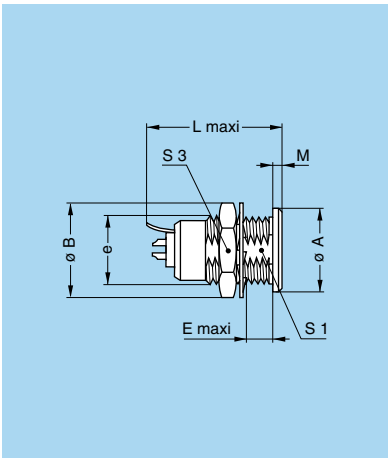

Reference		Dimensions (mm)								
Model	Series	A	B	e	E	L	L[1)]	M	S1	S3
ERN	**00**	9	10.2	M7x0.5	5.5	–	14.5	1.0	6.3	9
ERN	**0S**	11	12.4	M9x0.6	6.4	19.3	19.3	1.8	8.2	11
ERN	**1S**	14	15.8	M12x1.0	7.5	22.4	22.4	1.5	10.5	14
ERN	**2S**	18	19.2	M15x1.0	8.5	26.3	26.3	2.0	13.5	17
ERN	**3S**	22	25.0	M18x1.0	11.5	29.8	29.8	2.0	16.5	22

P1 Panel cut-out (page 180)

Note: [1)] unipole model

Watertight or vacuumtight models

These socket or coupler models allow the device on which they are fitted to reach a protection index of IP68 as per IEC 60529. They are fully compatible with plugs of the same series and are widely used for portable radios, military, laboratory equipment, aviation, etc.
These models are identified by a letter «P» at the end of the reference.
Most of these models are also available in a vacuumtight version. Such models are identified by an additional letter «V» at the end of the part number (certificate on request).
Epoxy resin is used to seal these models.

Technical Characteristics

Mechanical and Climatical

Characteristics		Value	Standard
Endurance		> 5000 cycles	IEC 60512-5 test 9a
Humidity		up to 95% at 60° C	
Temperature range	0S-1S	- 20° C/ + 100° C	
	2S-6S	- 20° C/+ 80° C	
Salt spray corrosion test		> 1000h	IEC 60512-6 test 11f
Climatical category		20/80/21	IEC 60068-1
Leakage rate (He)[1)]		< 10^{-7} mbar.l.s^{-1}	IEC 60512-7 test 14b

Note: [1)] only for vacuumtight models.

Characteristics		Value	Standard
Maximum operating pressure[2)]	0S	60 bar	IEC 60512-7 test 14d
	1S	60 bar	IEC 60512-7 test 14d
	2S	40 bar	IEC 60512-7 test 14d
	3S	30 bar	IEC 60512-7 test 14d
	4S	15 bar	IEC 60512-7 test 14d
	5S	5 bar	IEC 60512-7 test 14d
	6S	5 bar	IEC 60512-7 test 14d

Note: [2)] this value corresponds to the maximum allowed pressure difference for the assembled socket.

HGP Fixed socket, nut fixing, watertight or vacuumtight



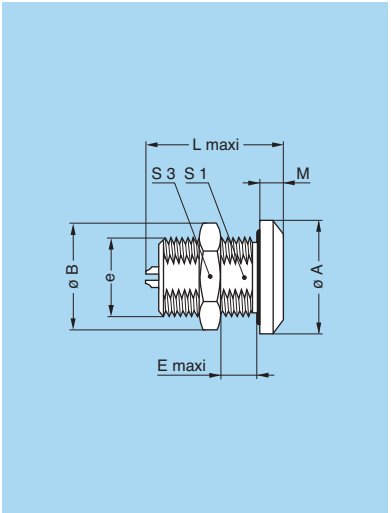

Reference		Dimensions (mm)								
Model	Series	A	B	e	E	L	L[1)]	M	S1	S3
HGP	0S	18	15.8	M12x1.0	11.5	20.5	21.5	4.0	10.5	14
HGP	1S	20	19.2	M14x1.0	15.5	25.0	22.0	4.0	12.5	17
HGP	2S	20	21.5	M16x1.0	17.0	29.5	28.0	4.0	14.5	19
HGP	3S	28	27.0	M20x1.0	18.0	33.0	34.0	6.0	18.5	24
HGP	4S	34	34.0	M25x1.0	22.5	39.0	43.0	6.5	23.5	30
HGP	5S	45	40.0	M35x1.0	28.0	50.5	78.5	7.5	33.5	–
HGP	6S	58	54.0	M48x1.5	22.0	51.0	–	6.0	45.5	–

P3 Panel cut-out (page 180)

Note: [1)] unipole model.

Note: The 5S and 6S series are delivered with a round nut.

HGW Fixed socket, nut fixing, with back washer, watertight or vacuumtight



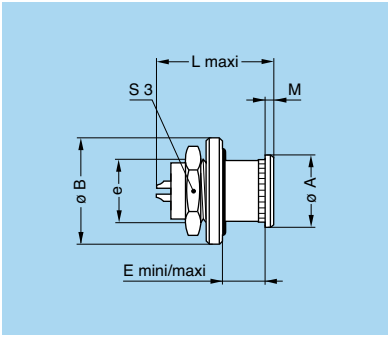

Reference		Dimensions (mm)							
Model	Series	A	B	e	E mini	E maxi	L	M	S3
HGW	0S	10	15	M9x0.6	2	3	20.5	1.2	11
HGW	1S	14	18	M12x1.0	2	4	25.0	1.5	14

P11 Panel cut-out (page 180)

Note: vacuumtight version is only available in the 0S series.

EWB Fixed socket, nut fixing, with two flats on the flange, watertight or vacuumtight



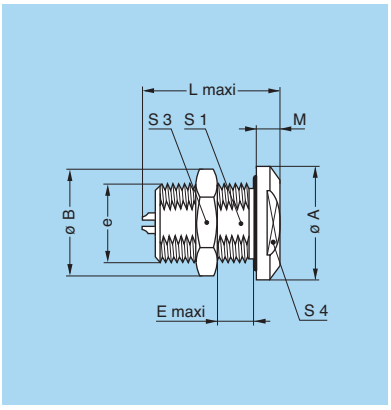

Reference		Dimensions (mm)								
Model	Series	A	B	e	E	L	L[1)]	M	S1	S3	S4
EWB	0S	18	15.8	M12x1.0	11.0	20.5	–	4.0	10.5	14	14
EWB	1S	20	19.2	M14x1.0	15.5	25.5	25.5	4.0	12.5	17	16
EWB	2S	20	21.5	M16x1.0	17.0	28.0	26.5	4.0	14.5	19	16
EWB	4S	34	34.0	M25x1.0	22.5	43.0	–	6.5	23.5	30	27

P3 Panel cut-out (page 180)

Note: [1)] unipole model

HCP Fixed socket, nut fixing, watertight or vacuumtight (back panel mounting)



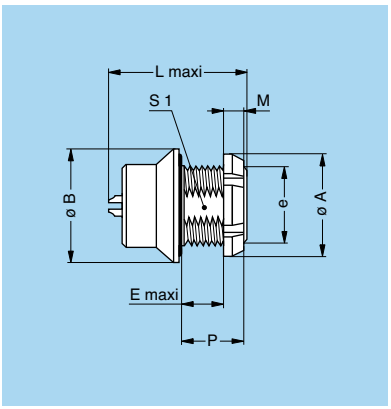

Reference		Dimensions (mm)							
Model	Series	A	B	e	E	L	M	P	S1
HCP	1S	18	20	M14x1.0	8.6	25.5	3.5	12.0	–
HCP	2S	20	20	M16x1.0	12.5	29.0	3.5	16.5	14.5
HCP	4S	27	34	M25x1.0	15.5	41.0	4.5	20.0	23.5

P3 Panel cut-out (page 180)

Note: the 2S and 4S series are delivered with a conical nut.

SWH Fixed coupler, nut fixing, watertight or vacuumtight



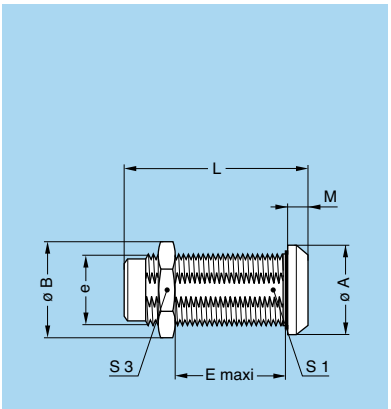

Reference		Dimensions (mm)							
Model	Series	A	B	e	E	L	M	S1	S3
SWH	0S	14	13.8	M10x0.75	17	34	2.0	9.0	12
SWH	1S	17	15.8	M12x1.00	28	39	2.5	10.5	14
SWH	2S	20	21.5	M16x1.00	25	44	4.0	15.0	19
SWH	3S	25	27.0	M20x1.00	30	53	4.0	18.5	24
SWH	4S	34	34.0	M25x1.00	50	65	4.0	23.5	30
SWH	5S	45	40.0	M35x1.00	58	80	5.0	33.5	–
SWH	6S	58	54.0	M48x1.50	55	81	6.0	45.5	–

P4 Panel cut-out (page 180)

Note: The 5S and 6S series are delivered with a round nut.

Note: see page 122 for the available plug and contact configurations and in order to ensure correct contact alignment.

E Series

E series connectors have been specifically designed for outdoor applications.
They include an inner sleeve and two seals to prevent penetration of solids or liquids into the housing formed by the plug, free socket, fixed socket or coupler. All models of these series are watertight when mated and give a protection index of IP 68 as per IEC 60529 standard (in mated condition) when correctly assembled to an appropriate cable (IP 66 otherwise).

- security of the Push-Pull latching system
- unipole types transmitting current up to 230 A and multipole types with up to 106 contacts
- wide range of models satisfying most applications
- 360° screening for full EMC shielding
- watertight connection (IP 68/IP 66)
- polarization by stepped insert (half-moon) fitted with male and female contacts
- solder or print contacts (straight or elbow)
- rugged housing for extreme working condition.

Metal housing models (page 95)

Straight plug

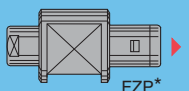

FZP*

Fixed plug

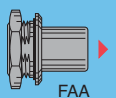

FAA

Elbow plug

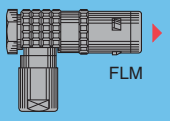

FLM

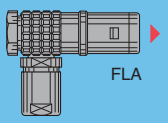

FLA

Straight plugs

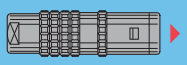

FFA, FFP*

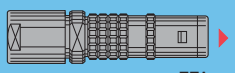

FFA

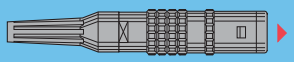

FFA

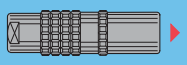

FFF

Fixed sockets

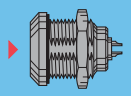

ERA

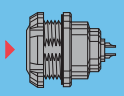

EEP

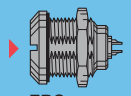

ERC

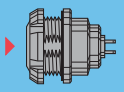

EEP

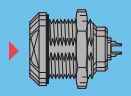

ERB*

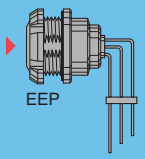

EEP

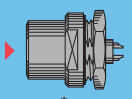

EHP*

Free sockets

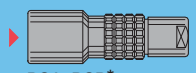

PCA, PCP*

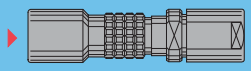

PCA

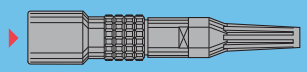

PCA

Fixed socket

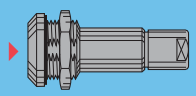

PSA

Free coupler

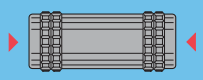

RMA

Watertight or vacuumtight models (page 101)

Fixed sockets

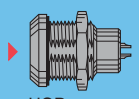

HGP

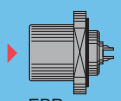

EBR

Fixed coupler

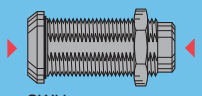

SWH

Note: * Contact LEMO for details.

Part Numbering System

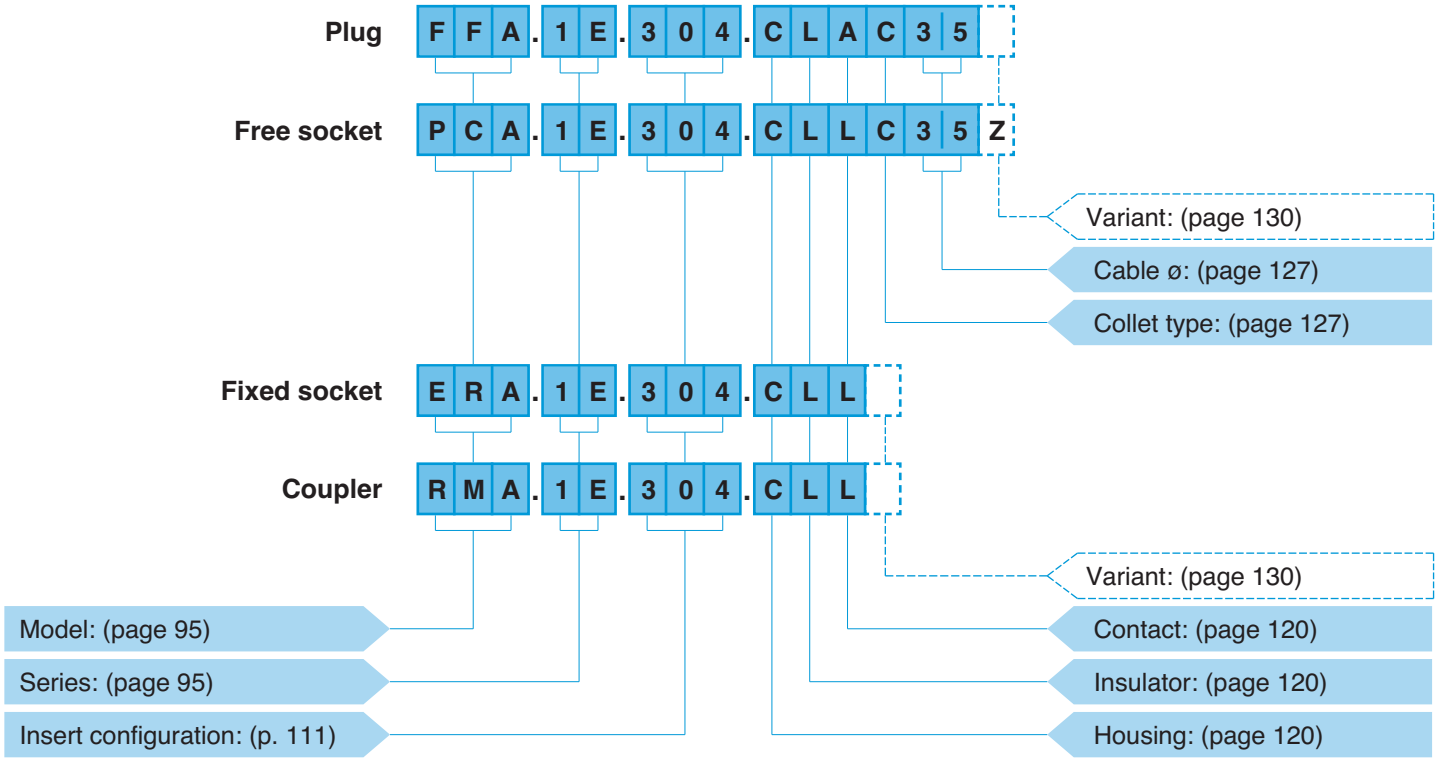

FFA.1E.304.CLAC35 = straight plug with cable collet, 1E series, multipole type with 4 contacts, outer shell in chrome-plated brass, PEEK insulator, 2 male and 2 female solder contacts, C type collet for a 3.5 mm diameter cable.

PCA.1E.304.CLLC35Z = free socket with cable collet, 1E series, multipole type with 4 contacts, outer shell in chrome-plated brass, PEEK insulator, 2 female and 2 male solder contacts, C type collet for a 3.5 mm diameter cable and collet nut for fitting a bend relief.

ERA.1E.304.CLL = fixed socket, nut fixing, 1E series, multipole type with 4 contacts, outer shell in chrome-plated brass, PEEK insulator, 2 female and 2 male solder contacts.

RMA.1E.304.CLL = straight coupler, 1E series, multipole type with 4 contacts, outer shell in chrome-plated brass, PEEK insulator, 2 female and 2 male contacts each end.

Part Section Showing Internal Components

Fixed socket

1. outer shell
2. earthing crown
3. retaining ring
4. hexagonal nut
5. insulator
6. male contact
7. female contact
8. o-ring

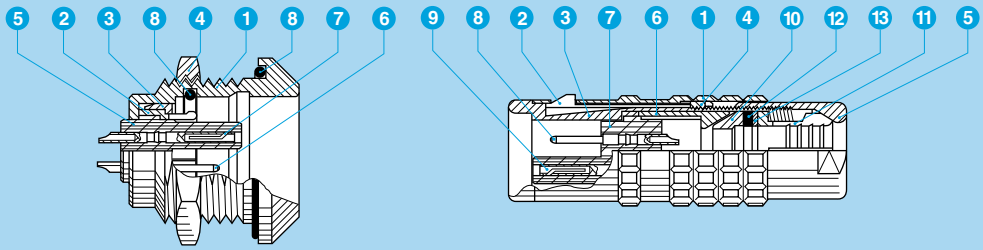

Straight plug

1. outer shell
2. latch sleeve
3. inner shell
4. retaining ring
5. collet nut
6. centre-piece
7. insulator
8. male contact
9. female contact
10. earthing cone
11. collet
12. gasket
13. washer

Metal housing models

Technical Characteristics

Mechanical and Climatical

Characteristics	Value	Standard
Endurance	> 5000 cycles	IEC 60512-5 test 9a
Humidity	up to 95% at 60° C	
Temperature range[1)]	- 55° C, + 200° C	
Resistance to vibrations	10-2000 Hz, 15g	IEC 60512-4 test 6d
Shock resistance	100 g, 6 ms	IEC 60512-4 test 6c
Salt spray corrosion test	> 1000h	IEC 60512-6 test 11f
Protection index (mated)[2)]	IP 68/IP 66	IEC 60529
Climatical category	50/175/21	IEC 60068-1

Electrical

Characteristics		Value	Standard
Shielding efficiency	at 10 MHz	> 95 dB	IEC 60169-1-3
	at 1 GHz	> 80 dB	IEC 60169-1-3

Note: the various tests have been carried out with FFA and ERA connector pairs, with chrome-plated brass shell, PEEK insulator and silicone O-ring. Detailed electrical characteristics, as well as materials and treatment are presented in the chapter Technical Characteristics on page 213.

1) minimum operating temperature is -20°C for sockets fitted with an FPM (Viton®) O-ring.

2) IP68 achieved providing that the cable is perfectly circular and that assembly process ensures a high integrity seal.

FFA Straight plug, cable collet



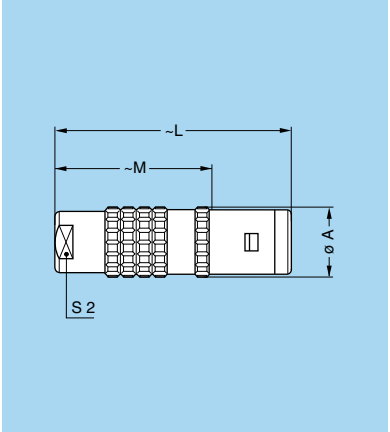

Reference		Dimensions (mm)			
Model	Series	A	L	M	S2
FFA	**0E**	11	34	23.0	8
FFA	**1E**	13	42	28.0	9
FFA	**2E**	16	52	36.0	12
FFA	**3E**	19	61	41.0	15
FFA	**4E**	25	71	50.5	19
FFA	**5E**	38	92	67.0	32
FGG[1)]	**6E**	47	118	89.0	38

Note: 1) with key (G)

M1 Cable assembly (pages 201 to 203)

FFA Straight plug with oversize cable collet [1)]



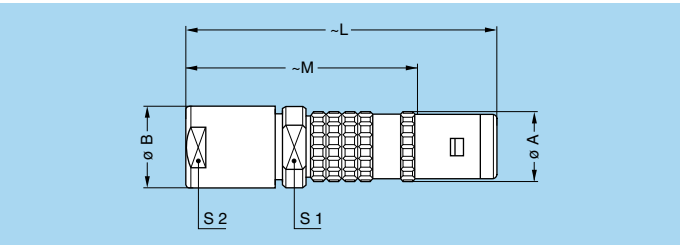

Reference		Dimensions (mm)					
Model	Series	A	B	L	M	S1	S2
FFA	**1E**	13	14.5	55	41	12	12
FFA	**2E**	16	17.0	65	49	15	15
FFA	**3E**	19	22.0	80	60	19	19
FFA	**4E**	25	36.0	118	84	30	32

M2 Cable assembly (pages 201 and 203)

Note: 1) correspond to K type of collet, the fitting of oversize collets onto this model allows them to be fitted to the cables that can be accommodated by the next housing size up (see page 127).

FFA Straight plug, cable collet and nut for fitting a bend relief [1)]



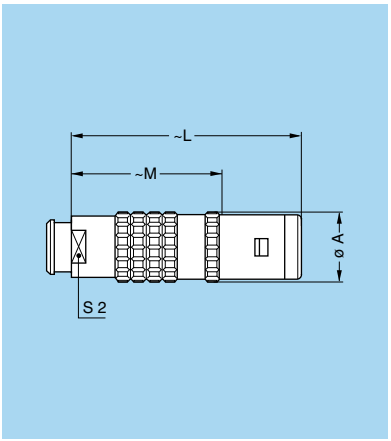

Reference		Dimensions (mm)			
Model	Series	A	L	M	S2
FFA	**0E**	11	34	23.0	7
FFA	**1E**	13	42	28.0	9
FFA	**2E**	16	52	36.0	12
FFA	**3E**	19	60	40.0	15
FFA	**4E**	25	71	50.5	19

M1 Cable assembly (pages 201 and 202)

Note: [1)] to order, add a «Z» at the end of the reference.
The bend relief must be ordered separately (see page 167).

FFF Straight plug non-latching cable collet



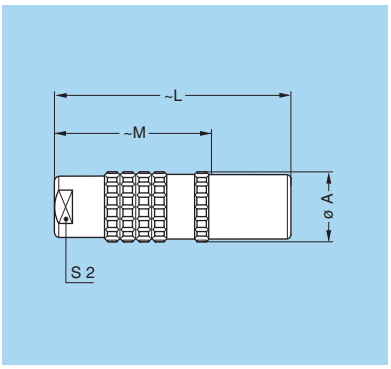

Reference		Dimensions (mm)			
Model	Series	A	L	M	S2
FFF	**0E**	11	34	23	8
FFF	**1E**	13	42	28	9

M1 Cable assembly (pages 201 and 202)

FAA Fixed plug non-latching, nut fixing



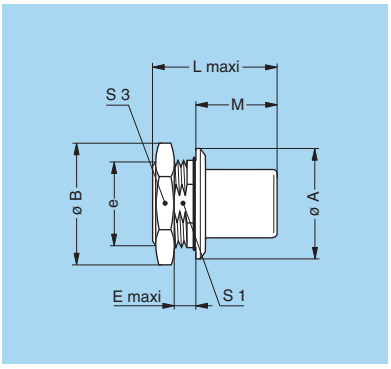

Reference		Dimensions (mm)								
Model	Series	A	B	e	E	L	L[1)]	M	S1	S3
FAA	**0E**	18	19.2	M14x1.0	3.5	19.5	19.5	13.0	12.5	17
FAA	**1E**	20	21.5	M16x1.0	3.5	23.0	23.0	16.0	14.5	19
FAA	**2E**	25	27.0	M20x1.0	4.0	27.0	27.0	18.0	18.5	24
FAA	**3E**	31	34.0	M24x1.0	4.5	32.5	32.5	22.5	22.5	30

P1 Panel cut-out (page 181)

Note: [1)] unipole model

FLM Elbow (90°) plug, cable collet



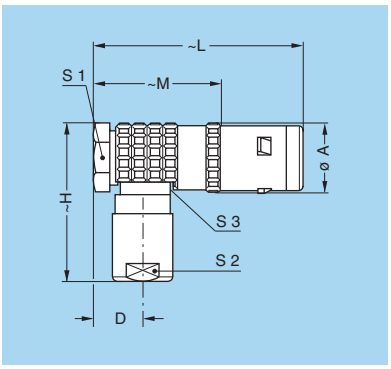

Reference		Dimensions (mm)							
Model	Series	A	D	H	L	M	S1	S2	S3
FLM	**0E**	11	7.3	25	36	25	9	8	8
FLM	**1E**	13	8.7	33	42	28	11	9	10
FLM	**2E**	16	10.2	40	51	35	14	12	13

M3 Cable assembly (pages 201 and 202)

FLA Elbow (90°) plug, cable collet



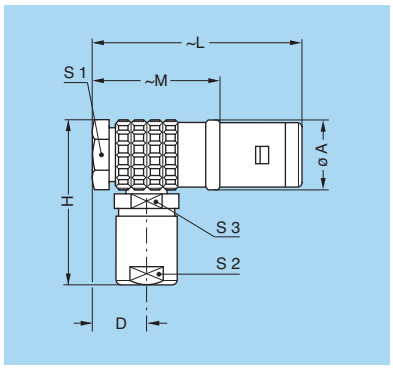

Reference		Dimensions (mm)							
Model	Series	A	D	H	L	M	S1	S2	S3
FLA	**3E**	21.0	11.5	47	60	40.0	18	15	15
FLA	**4E**	27.5	15.5	57	72	51.5	24	19	20

M3 Cable assembly (pages 201 and 202)

ERA Fixed socket, nut fixing



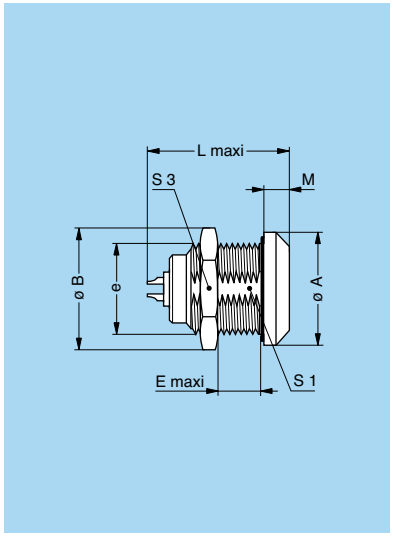

Reference		Dimensions (mm)								
Model	Series	A	B	e	E	L	L[1)]	M	S1	S3
ERA	**0E**	18	19.2	M14x1.0	5.5	19.5	20.5	4.0	12.5	17
ERA	**1E**	20	21.5	M16x1.0	9.0	24.0	25.3	4.5	14.5	19
ERA	**2E**	25	27.0	M20x1.0	9.0	28.5	30.0	5.0	18.5	24
ERA	**3E**	31	34.0	M24x1.0	11.0	34.0	35.0	6.0	22.5	30
ERA	**4E**	37	40.5	M30x1.0	9.0	36.0	38.0	6.5	28.5	36
ERA	**5E**	55	54.0	M45x1.5	10.0	44.5	78.0	9.0	42.5	–
EGG[2)]	**6E**	65	65.0	M55x2.0	10.5	48.5	–	10.0	52.0	–

P1 Panel cut-out (page 181)

Note: [1)] unipole model.
[2)] with key (G).

Note: The 5E and 6E series are delivered with a round nut.

ERC Fixed socket, nut fixing with slot in the flange



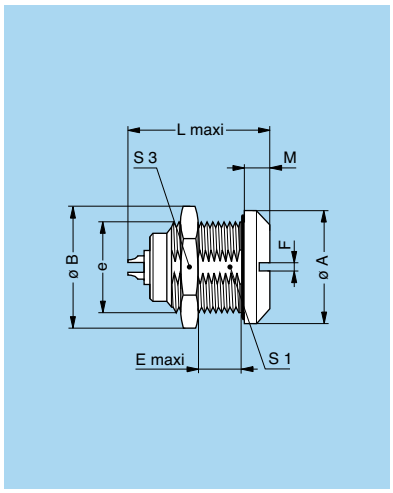

Reference		Dimensions (mm)									
Model	Series	A	B	e	E	F	L	L[1)]	M	S1	S3
ERC	**0E**	18	19.2	M14x1.0	5.5	1.5	19.5	20.5	4.0	12.5	17
ERC	**3E**	31	34.0	M24x1.0	11.0	3.0	34.0	35.0	6.0	22.5	30
ERC	**4E**	37	40.5	M30x1.0	9.0	3.0	36.0	38.0	6.5	28.5	36

P1 Panel cut-out (page 181)

Note: [1)] unipole model.

EEP **Fixed socket, nut fixing** (back panel mounting)



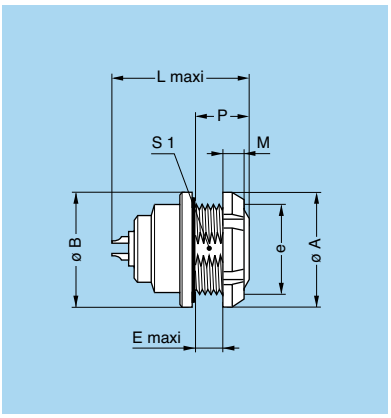

Reference		Dimensions (mm)								
Model	Series	A	B	e	E	L	L[1)]	M	P	S1
EEP	0E	18	18	M14x1.0	3.5	19.5	20.5	3.5	7	12.5
EEP	1E	20	20	M16x1.0	6.5	24.0	25.3	3.5	10	14.5
EEP	2E	25	25	M20x1.0	6.5	28.5	30.0	3.5	10	18.5
EEP	3E	30	31	M24x1.0	7.5	34.0	35.0	4.5	12	22.5

P1 Panel cut-out (page 181)

Note: [1)] unipole model

Note: the 3E series is delivered with a conical nut.

EEP **Fixed socket, nut fixing, with straight contact for printed circuit** (back panel mounting)



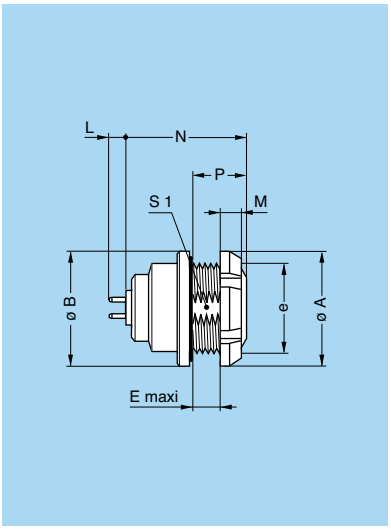

Reference		Dimensions (mm)							
Model	Series	A	B	e	E	M	N	P	S1
EEP	0E	18	18	M14x1.0	3.5	3.5	16.0	7	12.5
EEP	1E	20	20	M16x1.0	6.5	3.5	21.5	10	14.5
EEP	2E	25	25	M20x1.0	6.5	3.5	24.0	10	18.5
EEP	3E	30	31	M24x1.0	7.5	4.5	29.5	12	22.5

P1 Panel cut-out (page 181)

P21 PCB drilling pattern (page 188)

Note: The 3E series is delivered with a conical nut.

Note: this contact type is available for all E●● socket models.
See page 189 for table of available types.
Length «L» depends on the number of contacts, see PCB drilling pattern on page 189.

EEP **Fixed socket, nut fixing, with elbow (90°) contacts for printed circuit** (back panel mounting)



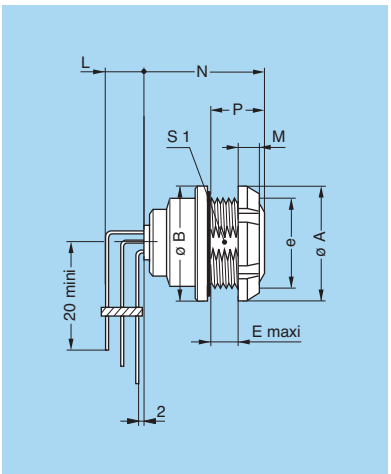

Reference		Dimensions (mm)							
Model	Series	A	B	e	E	M	N	P	S1
EEP	1E	20	20	M16x1.0	6.5	3.5	21.5	10	14.5
EEP	2E	25	25	M20x1.0	6.5	3.5	24.0	10	18.5

P1 Panel cut-out (page 181)

P24 PCB drilling pattern (page 190)

Note: this contact type is available for all back panel mounting socket types. See page 190 for available types.
Length «L» depends on the number of contacts, see PCB drilling pattern on page 190.

PCA Free socket, cable collet



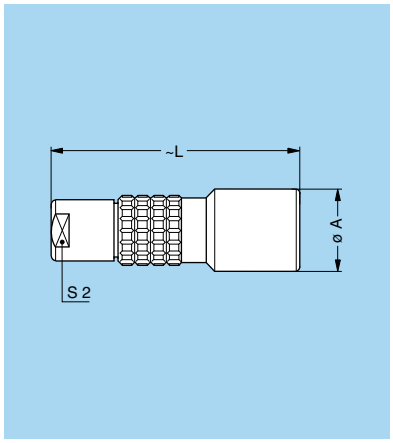

Reference		Dimensions (mm)		
Model	Series	A	L	S2
PCA	**0E**	13	34.0	8
PCA	**1E**	15	45.0	9
PCA	**2E**	19	54.0	12
PCA	**3E**	23	65.0	15
PCA	**4E**	29	75.5	19
PCA	**5E**	42	95.0	32
PHG[1)]	**6E**	52	125.0	38

Note: [1)] with key (G)

M1 Cable assembly (pages 201 to 203)

PCA Free socket with oversize cable collet [1)]



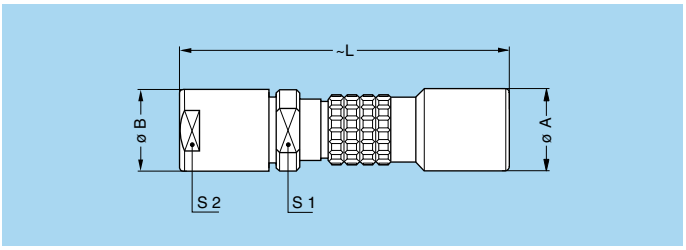

Reference		Dimensions (mm)				
Model	Series	A	B	L	S1	S2
PCA	**1E**	15	14.5	58.0	12	12
PCA	**2E**	19	17.0	67.0	15	15
PCA	**3E**	23	22.0	84.0	19	19
PCA	**4E**	29	36.0	109.0	30	32

M2 Cable assembly (page 203)

Note: [1)] correspond to K type of collet, the fitting of oversize collets onto this model allows them to be fitted to the cables that can be accommodated by the next housing size up (see page 127).

PCA Free socket, cable collet and nut for fitting a bend relief [1)]



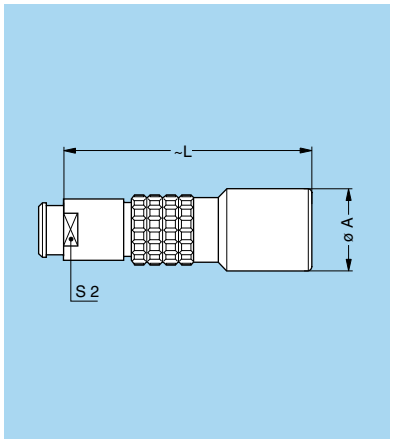

Reference		Dimensions (mm)		
Model	Series	A	L	S2
PCA	**0E**	13	34.0	7
PCA	**1E**	15	45.0	9
PCA	**2E**	19	54.0	12
PCA	**3E**	23	64.0	15
PCA	**4E**	29	75.5	19

M1 Cable assembly (pages 201 and 202)

Note: [1)] to order, add a «Z» at the end of the reference.
The bend relief must be ordered separately (see page 167).

PSA Fixed socket, nut fixing, cable collet



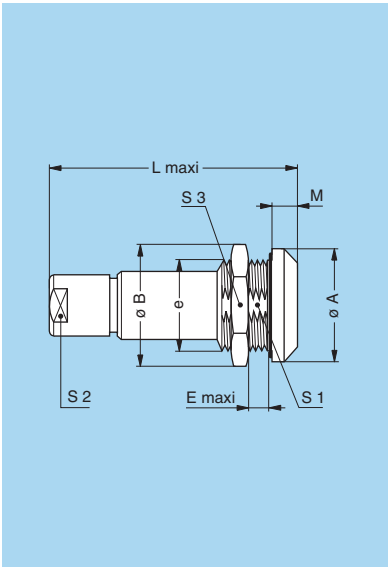

Reference		Dimensions (mm)								
Model	Series	A	B	e	E	L	M	S1	S2	S3
PSA	**0E**	18	19.2	M14x1.0	5.5	34.0	4.0	12.5	8	17
PSA	**1E**	20	21.5	M16x1.0	9.0	45.0	4.5	14.5	9	19
PSA	**2E**	25	27.0	M20x1.0	9.0	54.0	5.0	18.5	12	24
PSA	**3E**	31	34.0	M24x1.0	11.0	65.0	6.0	22.5	15	30
PSA	**4E**	37	40.5	M30x1.0	9.0	75.5	6.5	28.5	19	36
PSA	**5E**	51	54.0	M45x1.5	10.0	95.0	9.0	–	32	54
PKG[1)]	**6E**	65	65.0	M55x2.0	10.5	125.0	10.0	–	38	–

P1 Panel cut-out (page 181)

M1 Cable assembly (pages 201 to 203)

Note: The 5E and 6E series are delivered with a round nut.

Note: 1) with key (G).

RMA Free coupler



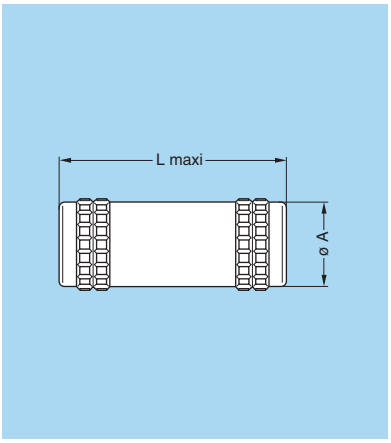

Reference		Dim. (mm)	
Model	Series	A	L
RMA	**0E**	14	30
RMA	**1E**	16	40
RMA	**2E**	20	44
RMA	**3E**	25	54
RMA	**4E**	30	57
RMA	**5E**	44	67

Note: see page 122 for the available plug and contact configurations and in order to ensure correct contact alignment.

Watertight or vacuumtight models

These socket or coupler models allow the device on which they are fitted to reach a protection index of IP 68 as per IEC 60529. They are fully compatible with plugs of the same series and are widely used for portable radios, military, laboratory equipment, aviation, etc.
These models are identified by a letter «P» at the end of the reference.
Most of these models are also available in a vacuumtight version. Such models are identified by an additional letter «V» at the end of the part number (certificate on request).
Epoxy resin is used to seal these models.

Technical Characteristics

Mechanical and Climatical

Characteristics		Value	Standard
Endurance		> 5000 cycles	IEC 60512-5 test 9a
Humidity		up to 95% at 60° C	
Temperature range	0E-1E	- 20° C, + 100° C	
	2E-6E	- 20° C, + 80° C	
Salt spray corrosion test		> 1000h	IEC 60512-6 test 11f
Climatical category		20/80/21	IEC 60068-1
Leakage rate (He)[1)]		< 10^{-7} mbar.l.s^{-1}	IEC 60512-7 test 14b

Note: [1)] only for vacuumtight models.

Characteristics		Value	Standard
Maximum operating pressure[2)]	0E	60 bar	IEC 60512-7 test 14d
	1E	60 bar	IEC 60512-7 test 14d
	2E	40 bar	IEC 60512-7 test 14d
	3E	30 bar	IEC 60512-7 test 14d
	4E	15 bar	IEC 60512-7 test 14d
	5E	5 bar	IEC 60512-7 test 14d
	6E	5 bar	IEC 60512-7 test 14d

Note: [2)] this value corresponds to the maximum allowed pressure difference for the assembled socket.

HGP Fixed socket, nut fixing, watertight or vacuumtight



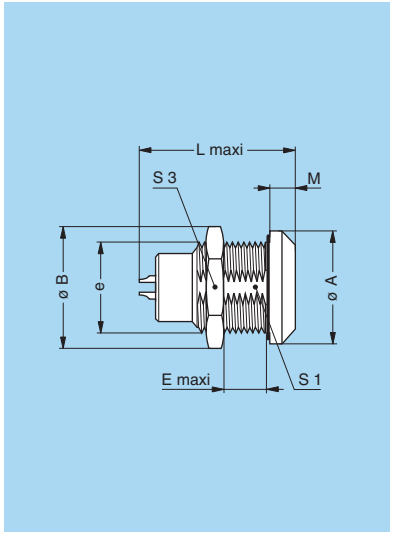

Reference		Dimensions (mm)								
Model	Series	A	B	e	E	L	L[1)]	M	S1	S3
HGP	**0E**	18	19.2	M14x1.0	5.5	23.5	22.0	4.0	12.5	17
HGP	**1E**	20	21.5	M16x1.0	9.0	29.5	28.0	4.5	14.5	19
HGP	**2E**	25	27.0	M20x1.0	10.5	32.5	28.0	5.0	18.5	24
HGP	**3E**	31	34.0	M24x1.0	15.5	39.5	38.5	6.0	22.5	30
HGP	**4E**	37	40.5	M30x1.0	17.5	43.0	44.0	6.5	28.5	36
HGP	**5E**	55	54.0	M45x1.5	20.0	52.0	76.0	9.0	42.5	–
HGP[2)]	**6E**	65	65.0	M55x2.0	20.5	52.0	–	10.0	52.0	–

P1 Panel cut-out (page 181)

Note: [1)] unipole model.
[2)] with key (G).

Note: The 5E and 6E series are delivered with a round nut.

EBR Fixed socket with round flange, watertight, protruding shell and screw fixing



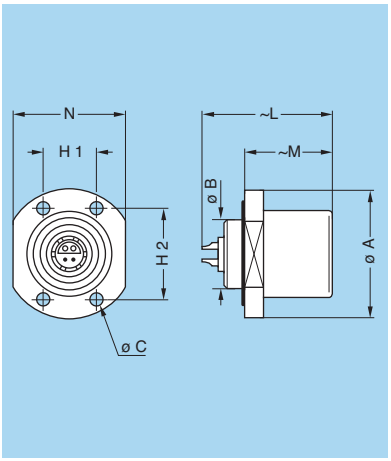

Reference		Dimensions (mm)								
Model	Series	A	B	C	H1	H2	L	L[1)]	M	N
EBR	**2E**	28	15	2.8	11.8	20.4	32.5	28	19	25

P6 Panel cut-out (page 181)

Note: [1)] unipole model.

Note: This model is only available in a watertight version.

SWH Fixed coupler, nut fixing, watertight or vacuumtight



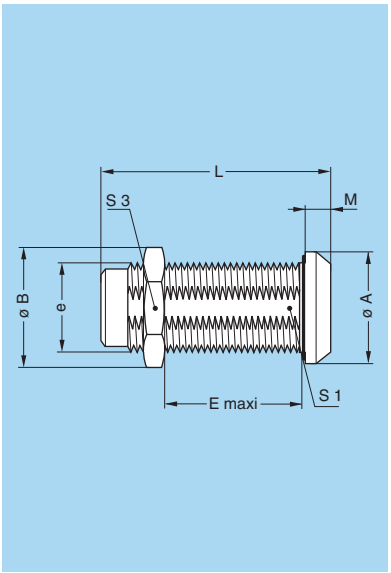

Reference		Dimensions (mm)							
Model	Series	A	B	e	E	L	M	S1	S3
SWH	**0E**	18	19.2	M14x1.0	22.5	36.0	4.0	12.5	17
SWH	**1E**	20	21.5	M16x1.0	30.5	47.0	4.5	14.5	19
SWH	**2E**	25	27.0	M20x1.0	28.0	52.4	5.0	18.5	24
SWH	**3E**	31	34.0	M24x1.0	33.0	64.2	6.0	22.5	30
SWH	**4E**	37	40.5	M30x1.0	44.5	70.0	6.5	28.5	36
SWH	**5E**	55	54.0	M45x1.5	47.0	81.0	9.0	42.5	–
SWH[1)]	**6E**	65	65.0	M55x2.0	12.0	76.0	10.0	–	–

P1 Panel cut-out (page 181)

Note: [1)] with key (G).

Note: The 5E and 6E series are delivered with a round nut.

Note: See page 122 for the available plug and contact configurations and in order to ensure correct contact alignment.

L Series

L series connectors have been specifically designed for outdoor applications. This series offer superior polarization combining the stepped insert (half-moon) of the S/E series with the keying system of the K series.
They include an inner sleeve and two seals to prevent penetration of solids or liquids into the housing formed by the plug, free socket, fixed socket or coupler. All models of this series are watertight when mated to give a protection index of IP68 as per IEC 60529 standard (in mated condition) when correctly assembled to an appropriate cable (IP66 otherwise).
L series connectors have the same insulators as the S series and have the following main features:

- security of the Push-Pull latching system
- multipole types 2 to 10 contacts
- stepped insert (half-moon) fitted with male and female contacts
- high packing density for space savings
- keying system («G» key standard) for connector alignment
- watertight connection (IP 68/IP 66)
- solder, crimp or print (straight) contacts
- multiple key options to avoid cross mating of similar connectors
- 360° screening for full EMC shielding
- rugged housing for extreme working conditions.

Metal housing models (page 105)

Fixed plug

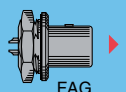

FAG

Elbow plug

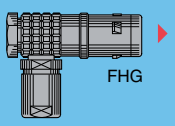

FHG

Straight plugs

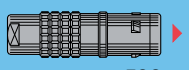

FGG

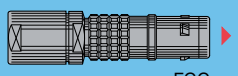

FGG

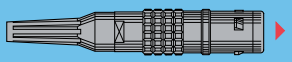

FGG

Fixed sockets

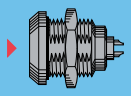

EGG

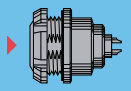

EEG

Free sockets

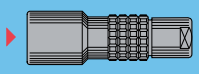

PHG

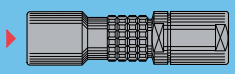

PHG

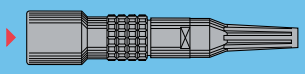

PHG

Vacuumtight model (page 109)

Fixed socket

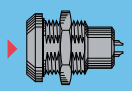

HGG

Fixed socket

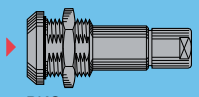

PKG

Part Numbering System

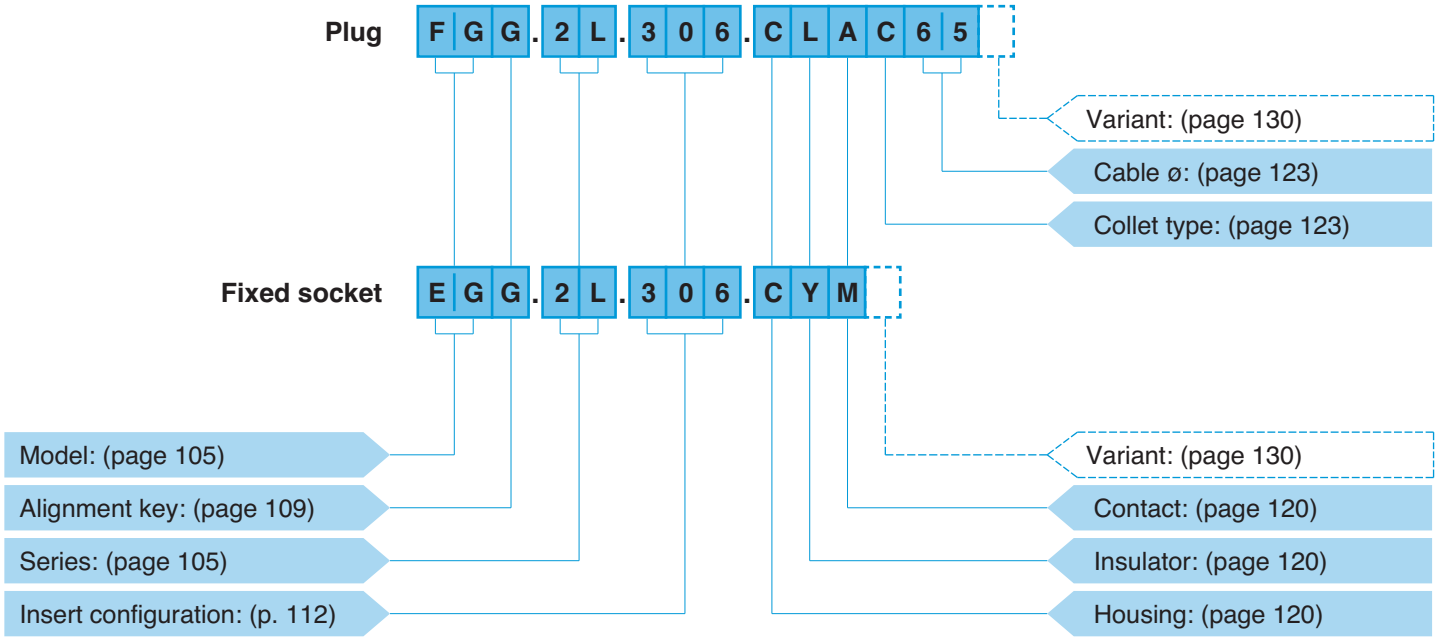

FGG.2L.306.CLAC65 = straight plug with key (G) and cable collet, 2L series, multipole type with 6 contacts, outer shell in chrome-plated brass, PEEK insulator, with 3 male and 3 female solder contacts, C type collet for 6.5 mm diameter cable.

EGG.2L.306.CYM = fixed socket, nut fixing, with key (G), 2L series, multipole type with 6 contacts, outer shell in chrome-plated brass, PEEK extended insulator, with 3 female and 3 male crimp contacts.

Part Section Showing Internal Components

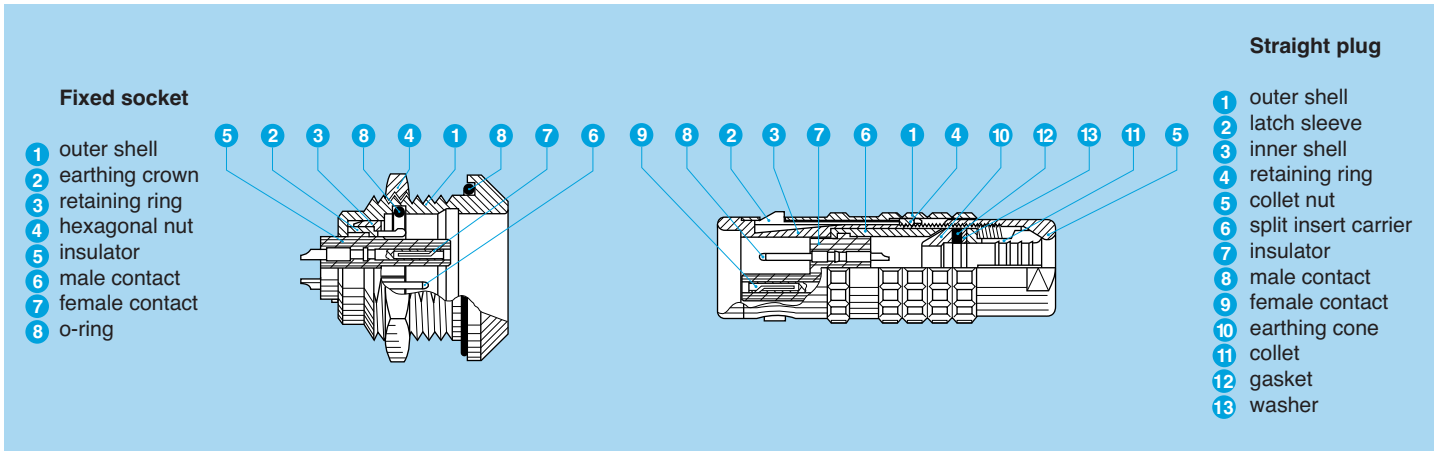

Metal housing models

Technical Characteristics

Mechanical and Climatical

Characteristics	Value	Standard
Endurance	> 5000 cycles	IEC 60512-5 test 9a
Humidity	up to 95% at 60° C	
Temperature range[1)]	- 55° C, + 200° C	
Resistance to vibrations	10-2000 Hz, 15g	IEC 60512-4 test 6d
Shock resistance	100 g, 6 ms	IEC 60512-4 test 6c
Salt spray corrosion test	> 1000h	IEC 60512-6 test 11f
Protection index (mated)[2)]	IP 68/IP 66	IEC 60529
Climatical category	50/175/21	IEC 60068-1

Electrical

Characteristics		Value	Standard
Shielding efficiency	at 10 MHz	> 95 dB	IEC 60169-1-3
	at 1 GHz	> 80 dB	IEC 60169-1-3

Note:
The various tests have been carried out with FGG and EGG connector pairs, with chrome-plated brass shell, PEEK insulator and silicone O-ring. Detailed electrical characteristics, as well as materials and treatment are presented in the chapter Technical Characteristics on page 213.

1) minimum operating temperature is -20°C for sockets fitted with an FPM (Viton®) O-ring.

2) IP68 achieved providing that the cable is perfectly circular and that assembly process ensures a high integrity seal.

FGG Straight plug, key (G) or keys (A to C and L), cable collet



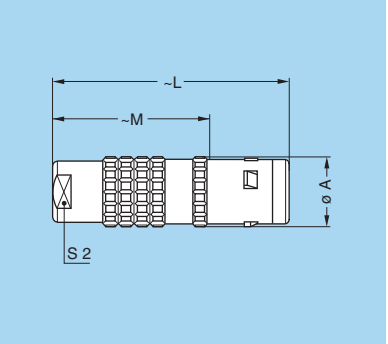

Reference		Dimensions (mm)			
Model	Series	A	L	M	S2
FGG	**0L**	11	34	23	8
FGG	**1L**	13	42	28	9
FGG	**2L**	16	52	36	12

M1 Cable assembly (page 204)

FGG Straight plug, key (G) or keys (A to C and L), cable collet and oversize cable collet [1)]



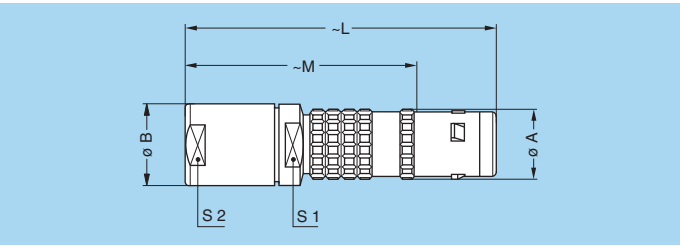

Reference		Dimensions (mm)					
Model	Series	A	B	L	M	S1	S2
FGG	**1L**	13	14.5	60	46	12	12
FGG	**2L**	16	17.0	68	52	15	15

M2 Cable assembly (page 204)

Note: 1) correspond to K type of collet, the fitting of oversize collets onto this model allows them to be fitted to the cables that can be accommodated by the next housing size up (see page 129).

FGG Straight plug, key (G) or keys (A to C and L), cable collet and nut for fitting a bend relief [1)]



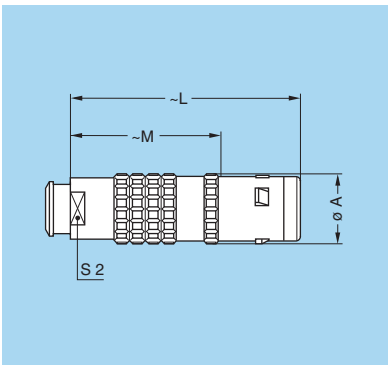

Reference		Dimensions (mm)			
Model	Series	A	L	M	S2
FGG	0L	11	34	23	7
FGG	1L	13	42	28	9
FGG	2L	16	52	36	12

M1 Cable assembly (page 204)

Note: [1)] to order, add a «Z» at the end of the reference.
The bend relief must be ordered separately (see page 167).

FAG Fixed plug, nut fixing, non-latching, key (G) or keys (A to C and L)



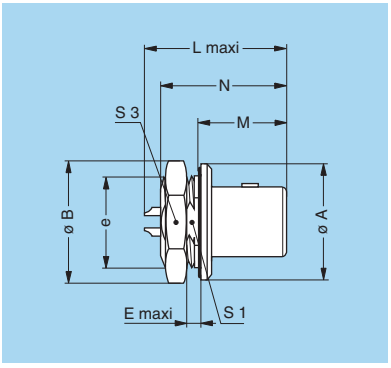

Reference		Dimensions (mm)								
Model	Series	A	B	e	E	L	M	N[1)]	S1	S3
FAG	2L	25	27	M20x1.0	4.5	28.2	18	28.3	18.5	24

P1 Panel cut-out (page 181)

Note: [1)] maximum length with crimp contacts.

FHG Elbow (90°) plug, key (G) or keys (A to C and L), cable collet



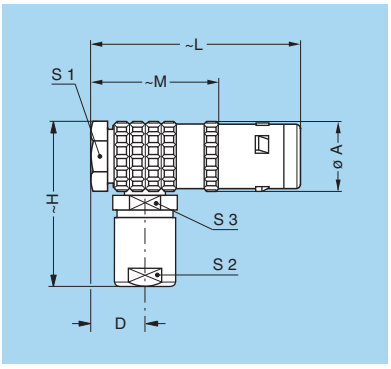

Reference		Dimensions (mm)							
Model	Series	A	D	H	L	M	S1	S2	S3
FHG	0L	11.5	7.6	27	36	25	10	8	8
FHG	1L	14.0	8.8	33	43	29	12	9	10
FHG	2L	17.5	10.5	40	51	35	15	12	13

M3 Cable assembly (page 204)

EGG Fixed socket, nut fixing, key (G) or keys (A to C and L)



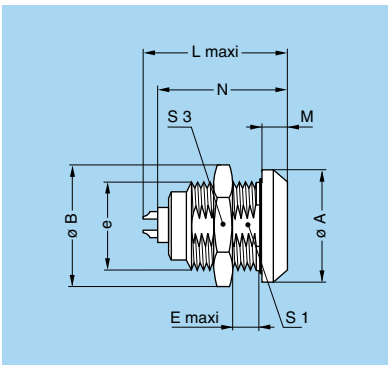

Reference		Dimensions (mm)								
Model	Series	A	B	e	E	L	M	N[1)]	S1	S3
EGG	0L	18	19.2	M14x1.0	6	21.7	4.0	20.1	12.5	17
EGG	1L	20	21.5	M16x1.0	9	27.0	4.5	25.1	14.5	19
EGG	2L	25	27.0	M20x1.0	9	30.7	5.0	28.6	18.5	24

P1 Panel cut-out (page 181)

Note: [1)] maximum length with crimp contacts.

EEG Fixed socket, nut fixing, key (G) or keys (A to C and L) (back panel mounting)



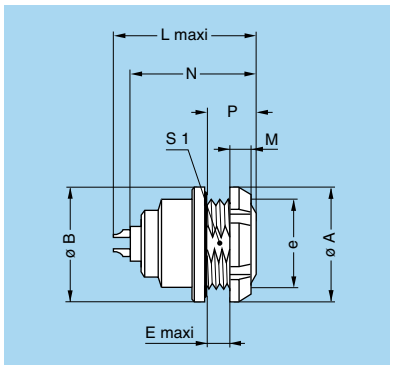

Reference		Dimensions (mm)								
Model	Series	A	B	e	E	L	M	N[1)]	P	S1
EEG	**0L**	18	18	M14x1.0	3.4	21.7	3.5	20.1	7	12.5
EEG	**1L**	20	20	M16x1.0	6.2	27.0	3.5	25.1	10	14.5
EEG	**2L**	25	25	M20x1.0	5.0	30.7	3.5	28.6	10	18.5

P1 Panel cut-out (page 181)

Note: [1)] maximum length with crimp contacts.

PHG Free socket, key (G) or keys (A to C and L), cable collet



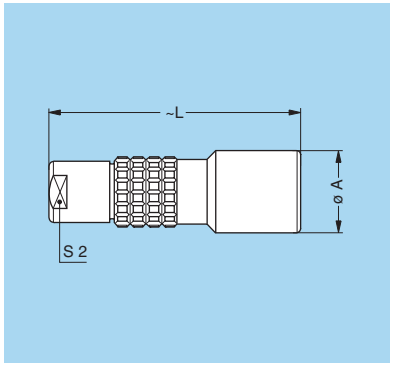

Reference		Dimensions (mm)		
Model	Series	A	L	S2
PHG	**0L**	13	34	8
PHG	**1L**	15	45	9
PHG	**2L**	19	54	12

M1 Cable assembly (page 204)

PHG Free socket, key (G) or keys (A to C and L), cable collet and oversize cable collet [1)]

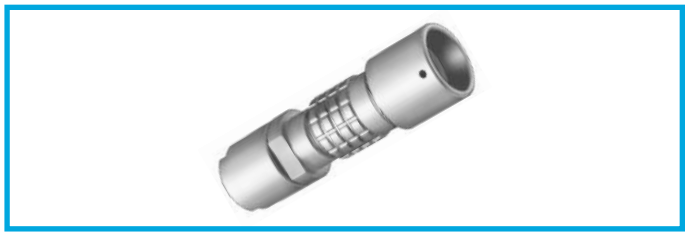

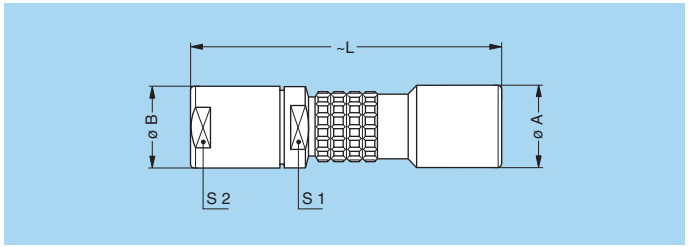

Reference		Dimensions (mm)				
Model	Series	A	B	L	S1	S2
PHG	**1L**	15	14.5	63	12	12
PHG	**2L**	19	17.0	70	15	15

M2 Cable assembly (page 204)

Note: [1)] correspond to K type of collet, the fitting of oversize collets onto this model allows them to be fitted to the cables that can be accommodated by the next housing size up (see page 129).

PHG Free socket, key (G) or keys (A to C and L), cable collet and nut for fitting a bend relief [1)]



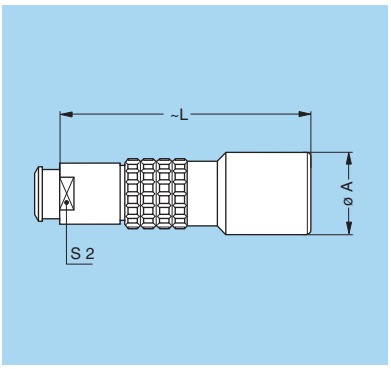

Reference		Dimensions (mm)		
Model	Series	A	L	S2
PHG	**0L**	13	34	7
PHG	**1L**	15	45	9
PHG	**2L**	19	54	12

M1 Cable assembly (page 204)

Note: [1)] to order, add a «Z» at the end of the reference.
The bend relief must be ordered separately (see page 167).

PKG Fixed socket, nut fixing, key (G) or keys (A to C and L), cable collet



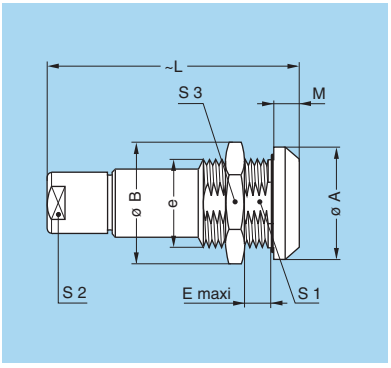

Reference		Dimensions (mm)								
Model	Series	A	B	e	E	L	M	S1	S2	S3
PKG	**0L**	18	19.2	M14x1.0	6	34	4.0	12.5	8	17
PKG	**1L**	20	21.5	M16x1.0	9	45	4.5	14.5	9	19
PKG	**2L**	25	27.0	M20x1.0	9	54	5.0	18.5	12	24

M1 Cable assembly (page 204)

P1 Panel cut-out (page 181)

Watertight or vacuumtight models

This socket model allow the device on which they are fitted to reach a protection index of IP68 as per IEC 60529.
This model is also available in a vacuumtight version. It is identified by the letter «PV» at the end of the part number (certificate on request).
Epoxy resin is used to seal this model.

Technical Characteristics

Mechanical and Climatical

Characteristics		Value	Standard
Endurance		> 5000 cycles	IEC 60512-5 test 9a
Humidity		up to 95% at 60° C	
Temperature range	0L-1L	- 20° C/+ 100° C	
	2L	- 20° C/+ 80° C	
Salt spray corrosion test		> 1000h	IEC 60512-6 test 11f

Characteristics		Value	Standard
Climatical category		20/80/21	IEC 60068-1
Leakage rate (He)		< 10^{-7} mbar.l.s^{-1}	IEC 60512-7 test 14b
Maximum operating pressure[2)]	0L	60 bar	IEC 60512-7 test 14 d
	1L	60 bar	IEC 60512-7 test 14 d
	2L	40 bar	IEC 60512-7 test 14 d

Note: [1)] this value corresponds to the maximum allowed pressure difference for the assembled socket.

HGG Fixed socket, nut fixing, key (G) or keys (A to C and L), vacuumtight



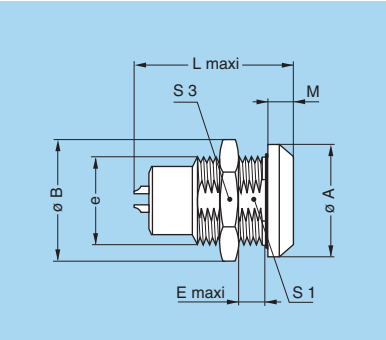

Reference		Dimensions (mm)							
Model	Series	A	B	e	E	L	M	S1	S3
HGG	0L	18	19.2	M14x1.0	5.5	21.7	4.0	12.5	17
HGG	1L	20	21.5	M16x1.0	9.0	30.0	4.5	14.5	19
HGG	2L	25	27.0	M20x1.0	13.0	33.7	5.0	18.5	24

P1 Panel cut-out (page 181)

Alignment Key (L series)

Alignment Key and Polarized Keying System

L series connector model part numbers are composed of three letters. The LAST LETTER indicates the key position and the contact type (male or female).

Front view of a socket

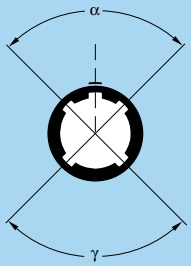

Ref.	Nb of keys	Angles	Series			Contact type		Note
			0L	1L	2L	Plug	Socket	
G	1	–	0°	0°	0°	male	female	●
A	2	α	30°	30°	30°	male	female	●
B	2	α	45°	45°	45°	male	female	○
J	2	γ	105°	105°	105°	female	male	○
L	2	γ	75°	75°	75°	male	female	●[1)]

Note: [1)] that contact type is not as for the K series.
● First choice alternative ○ Special order alternative

Insert configuration (S, E and L series)

Unipole

Number of LV contacts	Solder contacts		Reference	Series		Contact ø (mm)	Contact type				AWG			Test voltage (kV rms)[1]	Test voltage (kV dc)[1]	Rated current (A)[1]
				Standard	Watertight		Solder	Crimp	Print (straight)	Print (elbow)	Solder (max.)	Crimp min.	Crimp max.			
1	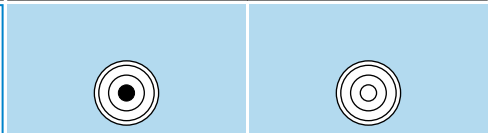		113	00	–	1.3	●[2]	●	–	–	20	26	18	0.8	1.2	8
	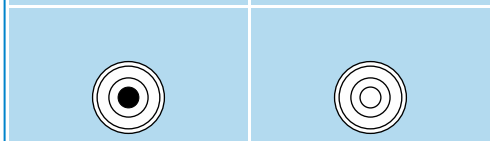		116	0S	0E	1.6	●[2]	–	–	–	18	–	–	1.5	2.1	12
	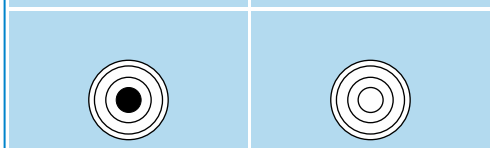		120	1S	1E	2.0	●[2]	–	–	–	16	–	–	1.9	2.7	18
	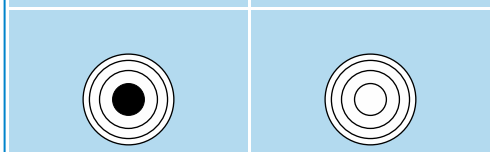		130	1S	1E	3.0	●	–	–	–	12	–	–	1.5	2.1	25
				2S	2E	3.0	●	–	–	–	12	–	–	2.1	3.0	30
	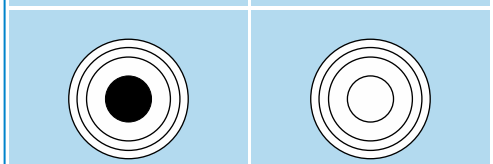		140	2S	2E	4.0	●	–	–	–	10	–	–	1.7	2.4	40
				3S	3E	4.0	●	–	–	–	10	–	–	2.3	3.3	43
				4S	–	4.0	●	–	–	–	10	–	–	3.0	4.2	46
	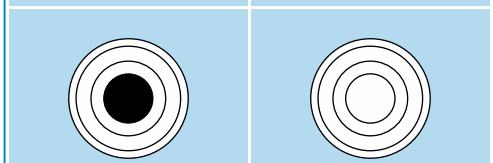		160	3S	3E	6.0	●	–	–	–	8	–	–	1.7	2.4	65
				4S	4E	6.0	●	–	–	–	8	–	–	2.7	3.9	70
	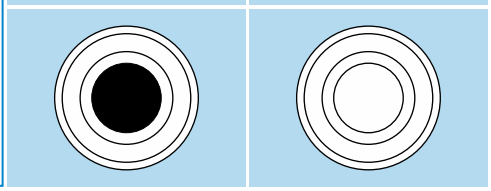		112	5S	5E	12.0	●	–	–	–	0	–	–	1.5	2.1	230

Note: [1] see calculation method, caution and suggested standard on page 213. [2] also available with inversed contacts: plug = female, socket = male.

● First choice alternative ○ Special order alternative

Multipole

Number of LV contacts	Solder contacts / Crimp contacts	Reference	Series: Standard	Series: Watertight	Contact ø (mm)	Contact type: Solder	Contact type: Crimp	Contact type: Print (straight)	Contact type: Print (elbow)	AWG: Solder (max.)	AWG: Crimp min.	AWG: Crimp max.	Test voltage (kV rms)[1) 2)]	Test voltage (kV dc)[1) 2)]	Rated current (A)[1)]
2	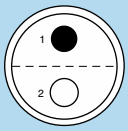 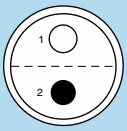	302	0S	0E-0L	0.9	●	●	●	●	22	32	20	1.1	1.6	10[3)]
			1S	1E-1L	1.3	●	●	●	●	20	26	18	1.2	1.8	15[3)]
			2S	2E-2L	1.6	●	○	●	○	18	22	14	1.7	2.4	20[4)]
			3S	3E	2.0	●	–	○	–	16	–	–	3.0	4.2	23
			4S	4E	4.0	●	–	○	–	10	–	–	2.1	3.0	35
			5S	5E	6.0	●	–	–	–	8	–	–	3.7	5.2	50
3	 	303	0S	0E-0L	0.7	●	●	●	●	26	32	22	1.0	1.5	7[3)]
			1S	1E-1L	0.9	●	●	●	●	22	32	20	1.2	1.8	10[3)]
			2S	2E-2L	1.3	●	○	●	○	20	26	18	1.5	2.1	15[4)]
			3S	3E	2.0	●	–	○	–	16	–	–	1.5	2.1	20
			4S	4E	3.0	●	–	○	–	12	–	–	2.1	3.0	25
			5S	5E	1x6.0 2x4.0	●	–	–	–	8 10	–	–	3.7	5.2	50 35
3	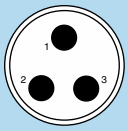 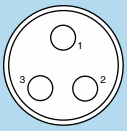	303	–	6E	6.0	●	–	–	–	8	–	–	3.0	4.2	50
4	 	304	0S	0E-0L	0.7	●	●	●	●	26	32	22	1.0	1.5	7[3)]
			1S	1E-1L	0.9	●	●	●	●	22	32	20	1.2	1.8	10[3)]
			2S	2E-2L	1.3	●	○	●	●	20	26	18	1.7	2.4	15[4)]
			3S	3E	2.0	●	–	○	–	16	–	–	1.5	2.1	18
			4S	4E	3.0	●	–	○	–	12	–	–	2.1	3.0	22
			5S	5E	4.0	●	–	–	–	10	–	–	3.7	5.2	35
			6S	6E	8.0	●	–	–	–	4	–	–	3.0	4.2	60
5	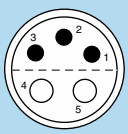 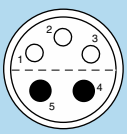	305	1S	1E-1L	2x0.9 3x0.7	●	○	●	●	22 26	32	20 22	1.5	2.1	10[3)] 7[3)]
			2S	2E-2L	1.3	●	○	●	●	20	26	18	1.5	2.1	13[4)]
			3S	3E	2x2.0 3x1.3	●	–	○	–	16 20	–	–	1.5	2.1	18 14
			4S	4E	2x3.0 3x2.0	●	–	○	–	12 16	–	–	2.1	3.0	22 16
			5S	5E	2x4.0 3x3.0	●	–	–	–	10 12	–	–	3.0	4.2	35 25

Note: [1)] see calculation method, caution and suggested standard on page 213. [2)] lowest measured value; contact to contact or contact to shell.
[3)] rated current = 6A for socket with elbow (90°) contacts for printed circuit. [4)] rated current = 12A for socket with elbow (90°) contacts for printed circuit.

● First choice alternative ○ Special order alternative

Multipole

Number of LV contacts	Solder contacts / Crimp contacts	Reference	Series: Standard	Series: Watertight	Contact ø (mm)	Contact type: Solder	Contact type: Crimp	Contact type: Print (straight)	Contact type: Print (elbow)	AWG: Solder (max.)	AWG: Crimp min.	AWG: Crimp max.	Test voltage (kV rms)[1) 2)]	Test voltage (kV dc)[1) 2)]	Rated current (A)[1)]
6	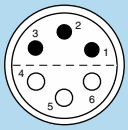 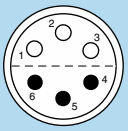	306	0S	0E-0L	0.5	●	○	●	○	28	32	28	0.9	1.3	2.5
			1S	1E-1L	0.7	●	○	●	●	26	32	22	1.2	1.7	7[3)]
			2S	2E-2L	1.3	●	●[4)]	●	●	20	26	18	1.5	2.1	12
			3S	3E	1.3	●	–	●	–	20	–	–	2.1	3.0	14
			4S	4E	2.0	●	–	○	–	16	–	–	2.1	3.0	16
			5S	5E	3.0	●	–	–	–	12	–	–	3.0	4.2	25
7	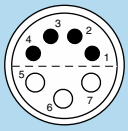 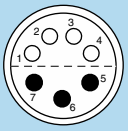	307	2S	2E-2L	3x1.3 4x0.9	●	○	●	●	20 22	26 32	18 20	0.8	1.2	12[3)] 9[3)]
			3S	3E	1.3	●	–	●	–	20	–	–	1.0	1.5	12
			4S	4E	3x2.0 4x1.3	●	–	○	–	16 20	–	–	2.1	3.0	16 13
8	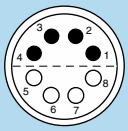 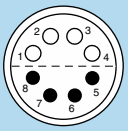	308	2S	2E-2L	0.9	●	○	●	●	22	32	20	0.8	1.2	9[3)]
			3S	3E	1.3	●	–	●	○	20	–	–	1.0	1.5	10
			4S	4E	1.3	●	–	○	–	20	–	–	2.7	3.9	13
			5S	5E	3.0	●	–	–	–	12	–	–	2.1	3.0	22
9	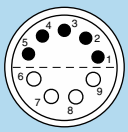 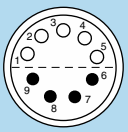	309	4S	4E	1.3	●	–	○	–	20	–	–	2.1	3.0	12
10	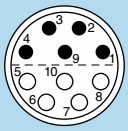 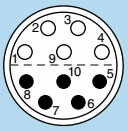	310	2S	2E-2L	0.9	●	○	●	●	22	32	20	0.8	1.2	7[3)]
			3S	3E	1.3	●	–	●	●	20	–	–	1.0	1.5	9
10	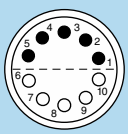 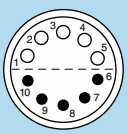	310	4S	4E	1.3	●	–	○	–	20	–	–	2.1	3.0	11
			5S	5E	2.0	●	–	–	–	16	–	–	2.1	3.0	18

Note: [1)] see calculation method, caution and suggested standard on page 213. [2)] lowest measured value; contact to contact or contact to shell. [3)] rated current = 6A for socket with elbow (90°) contacts for printed circuit. [4)] only for FFL model.

● First choice alternative ○ Special order alternative

Multipole

Number of LV contacts	Solder contacts	Crimp contacts	Reference	Series: Standard	Series: Watertight	Contact ø (mm)	Contact type: Solder	Contact type: Crimp	Contact type: Print (straight)	Contact type: Print (elbow)	AWG: Solder (max.)	AWG: Crimp min.	AWG: Crimp max.	Test voltage (kV rms)[1) 2)]	Test voltage (kV dc)[1) 2)]	Rated current (A)[1)]
12	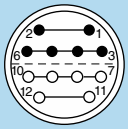	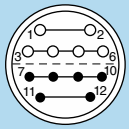	312	3S	3E	0.9	●	–	●	●	22	–	–	1.5	2.1	8
12	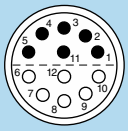	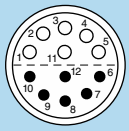	312	4S	4E	1.3	●	–	○	–	20	–	–	2.1	3.0	9
				6S	–	4.0	●	–	–	–	10	–	–	2.1	3.0	22
				–	6E	5.0	●	–	–	–	8	–	–	2.1	3.0	22
12	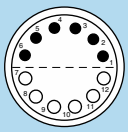	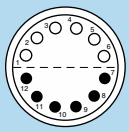	312	5S	5E	2.0	●	–	–	–	16	–	–	2.1	3.0	18
13	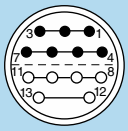	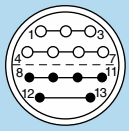	313	3S	3E	0.9	●	–	●	○	22	–	–	1.5	2.1	8
13	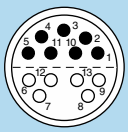	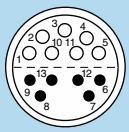	313	4S	–	1.3	●	–	○	–	20	–	–	2.1	3.0	9
14	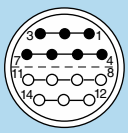	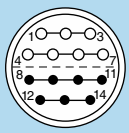	314	3S	3E	0.9	●	–	●	●	22	–	–	1.5	2.1	7
14	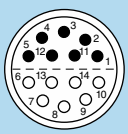	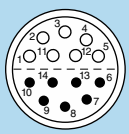	314	4S	4E	1.3	●	–	○	–	20	–	–	2.1	3.0	9

Note: [1)] see calculation method, caution and suggested standard on page 213. [2)] lowest measured value; contact to contact or contact to shell.

● First choice alternative ○ Special order alternative

Multipole

Number of LV contacts	Solder contacts	Crimp contacts	Reference	Series: Standard	Series: Watertight	Contact ø (mm)	Contact type: Solder	Contact type: Crimp	Contact type: Print (straight)	Contact type: Print (elbow)	AWG: Solder (max.)	AWG: Crimp min.	AWG: Crimp max.	Test voltage (kV rms)[1) 2)]	Test voltage (kV dc)[1) 2)]	Rated current (A)[1)]
14	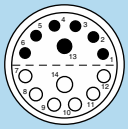	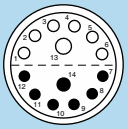	314	5S	5E	2x3.0 12x2.0	●	–	–	–	12 16	–	–	1.8	2.4	20 15
16	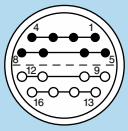	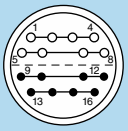	316	3S	3E	0.9	●	–	●	●	22	–	–	1.0	1.5	7
				4S	4E	0.9	●	–	○	–	22	–	–	2.1	3.0	7
16	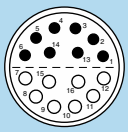	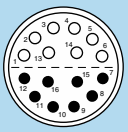	316	5S	5E	2.0	●	–	–	–	16	–	–	1.8	2.4	15
16	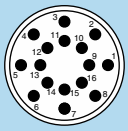	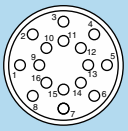	316	–	6E	3.0	●	–	–	–	12	–	–	1.5	2.1	14
18	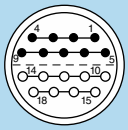	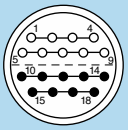	318	3S	3E	0.9	●	–	●	○	22	–	–	1.0	1.5	6
				4S	4E	0.9	●	–	○	–	22	–	–	2.1	3.0	7
18	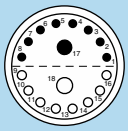	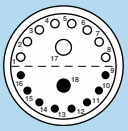	318	5S	5E	2x3.0 16x1.6	●	–	–	–	12 18	–	–	1.8	2.4	18 11
18	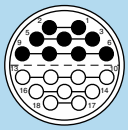	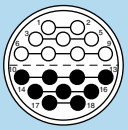	318	6S	–	4.0	●	–	–	–	10	–	–	1.2	1.8	16

Note: [1)] see calculation method, caution and suggested standard on page 213. [2)] lowest measured value; contact to contact or contact to shell.

● First choice alternative ○ Special order alternative

Multipole

Number of LV contacts	Solder contacts / Crimp contacts	Reference	Series: Standard	Series: Watertight	Contact ø (mm)	Contact type: Solder	Contact type: Crimp	Contact type: Print (straight)	Contact type: Print (elbow)	AWG: Solder (max.)	AWG: Crimp min.	AWG: Crimp max.	Test voltage (kV rms)[1) 2)]	Test voltage (kV dc)[1) 2)]	Rated current (A)[1)]
20	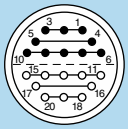 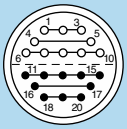	320	4S	4E	0.9	●	–	○	–	22	–	–	2.1	3.0	7
20	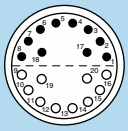 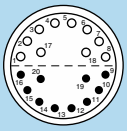	320	5S	5E	1.6	●	–	–	–	18	–	–	1.8	2.4	11
20	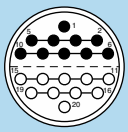 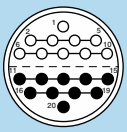	320	6S	–	3.0	●	–	–	–	12	–	–	1.5	2.1	14
20	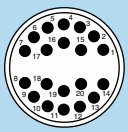 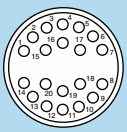	320	–	6E	3.0	●	–	–	–	12	–	–	1.5	2.1	14
22	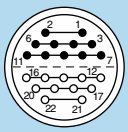 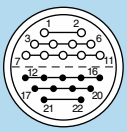	322	4S	4E	0.9	●	–	○	–	22	–	–	2.1	3.0	7
22	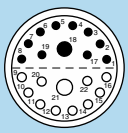 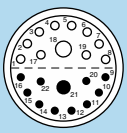	322	5S	5E	2x3.0 20x1.6	●	–	–	–	12 18	–	–	1.8	2.4	16 9
24	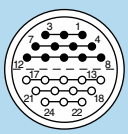 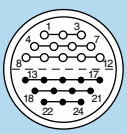	324	4S	4E	0.9	●	–	○	–	22	–	–	2.1	3.0	7
			5S	5E	1.6	●	–	–	–	18	–	–	2.7	3.9	9
			6S	–	3.0	●	–	–	–	12	–	–	1.2	1.8	12

Note: [1)] see calculation method, caution and suggested standard on page 213. [2)] lowest measured value; contact to contact or contact to shell.

● First choice alternative ○ Special order alternative

Multipole

Number of LV contacts	Solder contacts	Crimp contacts	Reference	Series: Standard	Series: Watertight	Contact ø (mm)	Contact type: Solder	Contact type: Crimp	Contact type: Print (straight)	Contact type: Print (elbow)	AWG: Solder (max.)	AWG: Crimp min.	AWG: Crimp max.	Test voltage (kV rms)[1) 2)]	Test voltage (kV dc)[1) 2)]	Rated current (A)[1)]
24	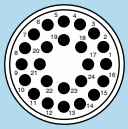	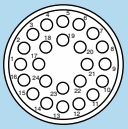	324	–	6E	3.0	●	–	–	–	12	–	–	1.2	1.8	12
30	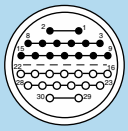	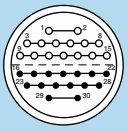	330	5S	5E	1.3	●	–	–	–	20	–	–	1.8	2.4	8
30	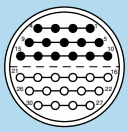	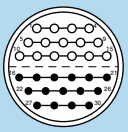	330	6S	6E	2.0	●	–	–	–	16	–	–	2.1	3.0	10
32	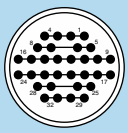	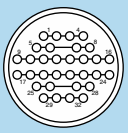	332	–	6E	2.0	●	–	–	–	16	–	–	1.5	2.1	10
36	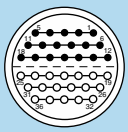	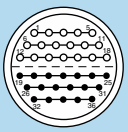	336	5S	5E	1.3	●	–	–	–	20	–	–	1.8	2.4	7
36	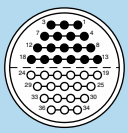	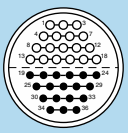	336	6S	–	2.0	●	–	–	–	16	–	–	1.5	2.1	8
36	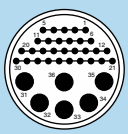	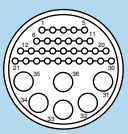	336	–	6E	30x1.3 6x5.0	●	–	–	–	20 8	–	–	1.5	2.1	4 22

Note: 1) see calculation method, caution and suggested standard on page 213. 2) lowest measured value; contact to contact or contact to shell.

● First choice alternative ○ Special order alternative

Multipole

Number of LV contacts	Solder contacts / Crimp contacts	Reference	Series: Standard	Series: Watertight	Contact ø (mm)	Contact type: Solder	Contact type: Crimp	Contact type: Print (straight)	Contact type: Print (elbow)	AWG: Solder (max.)	AWG: Crimp min.	AWG: Crimp max.	Test voltage (kV rms)[1) 2)]	Test voltage (kV dc)[1) 2)]	Rated current (A)[1)]
40	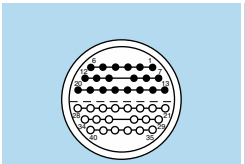	340	5S	5E	1.3	●	–	–	–	20	–	–	1.2	1.8	7
			–	6E	2.0	●	–	–	–	16	–	–	1.5	2.1	8
44	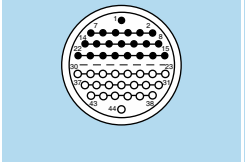	344	5S	5E	1.3	●	–	–	–	20	–	–	1.2	1.8	6
48	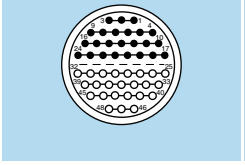	348	5S	5E	1.3	●	–	–	–	20	–	–	1.2	1.8	6
			6S	6E	2.0	●	–	–	–	16	–	–	1.5	2.1	7
60	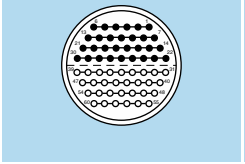	360	6S	6E	1.6	●	–	–	–	18	–	–	1.5	2.1	5
62	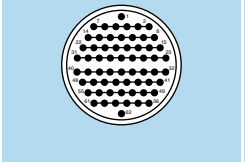	362		6E	1.6	●	–	–	–	18	–	–	1.5	2.1	5
64	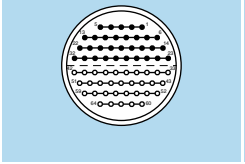	364	6S	6E	1.3	●	–	–	–	20	–	–	1.2	1.8	4
72	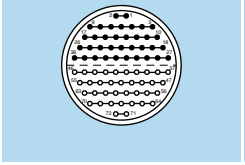	372	6S	6E	1.3	●	–	–	–	20	–	–	1.2	1.8	4

Note: 1) see calculation method, caution and suggested standard on page 213. 2) lowest measured value; contact to contact or contact to shell.

● First choice alternative ○ Special order alternative

Multipole

Number of LV contacts	Solder contacts / Crimp contacts		Reference	Series		Contact ø (mm)	Contact type				AWG			Test voltage (kV rms)[1) 2)]	Test voltage (kV dc)[1) 2)]	Rated current (A)[1)]
				Standard	Watertight		Solder	Crimp	Print (straight)	Print (elbow)	Solder (max.)	Crimp min.	Crimp max.			
106	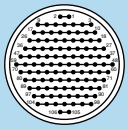		**106**	–	6E	0.9	●	–	–	–	22	–	–	0.8	1.2	2
106	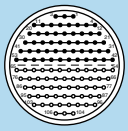		**106**	6S	–	0.9	●	–	–	–	22	–	–	0.8	1.2	2

Note: 1) see calculation method, caution and suggested standard on page 213. 2) lowest measured value; contact to contact or contact to shell.

● First choice alternative ○ Special order alternative

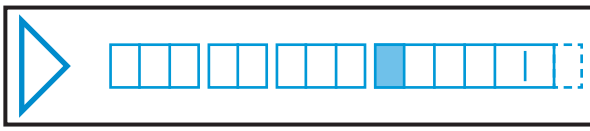

Housings (S, E and L series)

Ref.	Outer shell and collet nut		Latch sleeve + earthing crown		Other metallic components		Remarks	Note
	Material	Surf. treatment	Material	Surf. treatment	Material	Surf. treatment		
C	Brass	chrome	brass/bronze	nickel [2]	brass	nickel		●
D	Brass	gold-plated	brass/bronze	nickel [2]	brass	nickel		○
N	Brass	nickel	brass/bronze	nickel [2]	brass	nickel		○
K	Brass	black chrome [3]	brass/bronze	nickel [2]	brass	nickel		●
S	Stainless steel	–	brass/bronze	nickel [2]	brass	nickel		○
T	Stainless steel	–	stainless steel	–	brass	nickel		○
U	Stainless steel	–	stainless steel	–	stainless steel	–		○
L	Aluminium alloy	anodized	brass/bronze	nickel [2]	brass	nickel	[1]	○
B	POM (black)	–	brass/bronze	nickel [2]	brass	nickel	Only for FFP, ERN and PCP (S series)	●
G	PEEK (natural)	–	brass/bronze	nickel [2]	brass	nickel	Only for FFP, ERN and PCP (S series)	●
P	PSU	–	brass/bronze	nickel [2]	brass	nickel	Only for FFL (S series) [1]	●
R	PPSU	–	brass/bronze	nickel [2]	brass	nickel	Only for FFL (S series) [1]	●
H	PPS/brass	–/nickel	brass/bronze	nickel [2]	brass	nickel	Only for EPL and EXP (S series)	●

Note: detailed characteristics of these materials and treatments are presented on page 205.
[1] see «variant» for the colour.
[2] in the E and L series, the latch sleeve is chrome-plated.
[3] surface not conductive use socket with earthing tag (ERN model) to carry shield.

● First choice alternative
○ Special order alternative

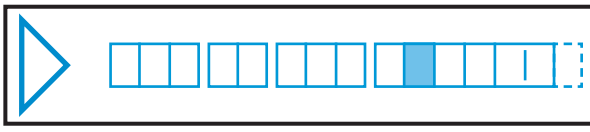

Insulators (S, E and L series)

Ref.	Material	Contact type	Remarks	Note
L	PEEK	Solder or print		●
Y	PEEK	Crimp		●
T	PTFE	Solder	only for unipole types	●
T	FEP	Solder	only for multipole types of the S or E series	○
V	PI	Solder	only for multipole types of the S or E series	○
N	PA6.6	Solder	material for 5S/5E and 6S/6E series multipole inserts	●

Note: detailed characteristics of these materials are presented on page 210.

● First choice alternative ○ Special order alternative

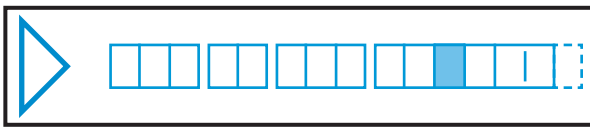

Contacts (S, E and L series)

Soldering characteristics

– no need to order specific tools, a simple soldering iron is sufficient
– ideal for very small and fragile conductors
– contacts with solder cups to allow the solder to flow

Note: see page 211 for more information.

Crimping characteristics

– practical, quick contact fixing outside the insulator
– possible use at high temperature
– need to order specific tools
– no risk of heating the insulator during the conductor-contact fixing
– high tensile strength
– totally lead-free solution

Contacts reference for plugs, free or fixed sockets

Contact type	Reference		Contact			Conductor						F_r [1] (N)	Notes
						Solid		Stranded					
								AWG		Section (mm²)			
	Male	Female	ø A (mm)	ø C (mm)	Form per fig.	AWG max.	Section max. (mm²)	min.	max.	min.	max.		
Solder 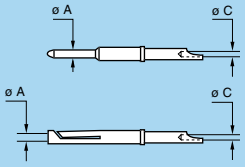	A	L	0.5	0.45	–	28	0.09	–	28	–	0.09	–	●
			0.7	0.60	–	24	0.25	–	26	–	0.14	–	
			0.9	0.80	–	22	0.34	–	22[2]	–	0.34	–	
			1.3	1.00	–	20	0.50	–	20[2]	–	0.50	–	
			1.6	1.40	–	16	1.00	–	18	–	1.00	–	
			2.0	1.80	–	14	1.50	–	16	–	1.50	–	
			3.0	2.70	–	10	4.00	–	12	–	4.00	–	
			4.0	3.70	–	10	6.00	–	10	–	6.00	–	
			5.0	5.20	–	–	–	–	8	–	10.00	–	
			6.0	5.20	–	–	–	–	8	–	10.00	–	
			8.0	7.00	–	–	–	–	4	–	21.00	–	
			12.0	11.50	–	–	–	–	0	–	50.00	–	
Crimp fig. 1 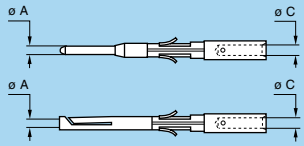	C	M	0.7	0.80	1	–	–	26	22[2]	0.140	0.34	22	●
	B	P	0.7	0.45	2	–	–	32	28	0.035	0.09	22	○
	C	M	0.9	1.10	1	–	–	24	20	0.250	0.50	30	●
	B	P	0.9	0.80	2	–	–	26	22[2]	0.140	0.34	30	○
	G	U	0.9	0.45	2	–	–	32	28	0.035	0.09	30	○
	C	M	1.3	1.40	1	–	–	20	18	0.500	1.00	40	●
	B	P	1.3	1.10	2	–	–	24	20	0.250	0.50	40	○
fig. 2 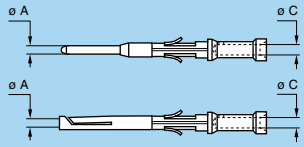	G	U	1.3	0.80	2	–	–	26	22[2]	0.140	0.34	40	○
	C	M	1.6	1.90	1	–	–	18	14[2]	1.000	1.50	50	●
	B	P	1.6	1.40	2	–	–	22	18	0.340	1.00	50	○
	C	M	2.0	2.40	1	–	–	16	12[2]	1.500	2.50	65	●
	B	P	2.0	1.90	2	–	–	18	14	1.500	1.50	65	○
Print 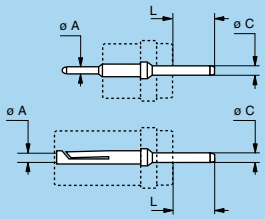	D	N	L dimensions and C are detailed in the section on PCB drilling pattern. See page 189.										●
Print (elbow) 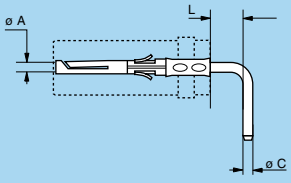	V	V	L dimensions and C are detailed in the section on PCB drilling pattern. See page 190.										●

Note: [1] contact retention force in the insulator (according to IEC 60512-8 test 15 a).
[2] for a given AWG, the diameter of some stranded conductor designs is larger than the solder cup diameter. Make sure that the maximum conductor diameter is smaller than ø C.

● First choice alternative ○ Special order alternative

Contacts reference for coupler and plug with socket

Ref.	Contact type	Remarks
A	Male - Female	contact configuration is explained below
L	Female - Male	contact configuration is explained below
M	Female - Female	contact configuration is explained below

Contacts reference for fixed and free couplers RMA, RAD and SWH

A Male - Female

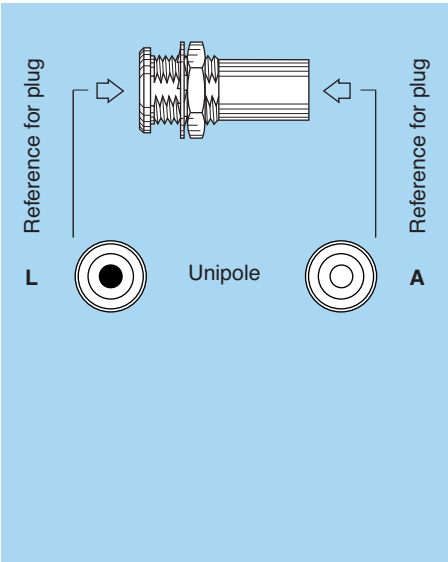

L Female - Male

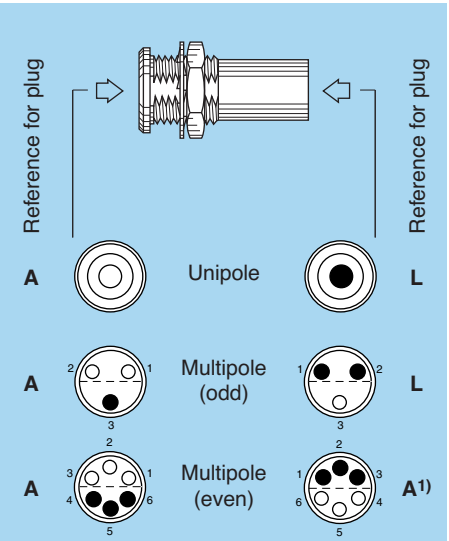

M Female - Female

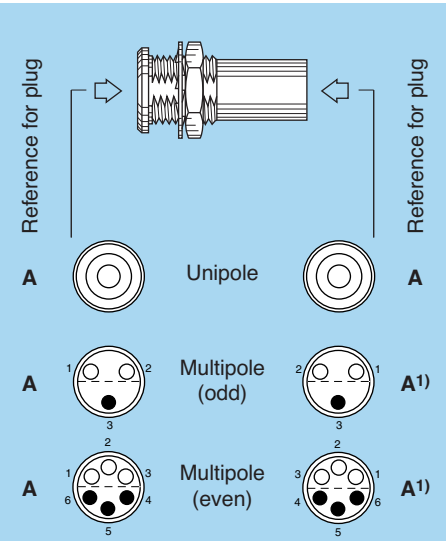

Use of plugs for mating with RAD, RMA and SWH couplers

Unipole type:

Reference M for coupling two identical plugs fitted with male contact (contact reference A).
Reference L for coupling a plug fitted with male contacts (contact reference A) at the flange end for RAD and SWH and an inverted plug fitted with female contacts (contact reference L) at the other end.
Reference A for the inverted version of code L.

Multipole type:

Reference L for coupling a standard plug (contact reference A) at the flange end for RAD and SWH and an inverted plug (contact reference as indicated in the above table) at the other end.
Reference M for coupling two standard plugs (contact type A).
Only available for RAD and RMA models.

Note: 1) this connector combination does not allow for contact numbering. One of the plugs has to be cable mounted in a way to ensure correct signal continuity.

Collets (S, E and L series)

C, K and L type collets for S series

C type



K type
oversize
cable collet

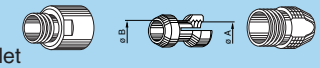

L type
(non EMC)



	Reference		Collet ø		Cable ø		Notes
	Type	Code	ø A	ø B	max.	min.	
00	C	17	1.7	1.5	1.7	1.3	
	C	22	2.2	–	2.2	> 1.7	
	C	27	2.7	–	2.7	> 2.2	
	C	31	3.1	2.7	3.1	> 2.7	
	K	37	3.7	–	3.7	> 3.2	
	K	42	4.2	3.7	4.4	> 3.7	
	L	27	2.7	–	2.6	2.2	2)
	L	31	3.1	–	3.0	2.6	2)
0S	C	22	2.2	–	2.2	1.3	3)
	C	32	3.2	–	3.2	> 2.2	
	C	37	3.7	–	3.7	> 3.2	
	C	44	4.4	3.7	4.4	> 3.7	
	K	52	5.2	–	5.2	> 4.2	
	K	57	5.7	5.2	5.7	> 5.2	
	K	62	6.2	5.2	6.2	> 5.7	
	L	22	2.2	–	2.2	1.3	2)
	L	32	3.2	–	3.2	> 2.2	2)
	L	37	3.7	–	3.7	> 3.2	2)
	L	44	4.4	–	4.3	3.5	1) 2)
	L	48	4.8	–	4.8	4.4	1) 2)
1S	C	22	2.2	–	2.2	1.4	
	C	32	3.2	–	3.2	> 2.2	
	C	42	4.2	–	4.2	> 3.2	
	C	52	5.2	–	5.2	> 4.2	
	C	57	5.7	5.2	5.7	> 5.2	
	C	62	6.2	5.2	6.2	> 5.7	
	K	72	7.2	–	7.2	> 6.2	
	K	82	8.2	6.7	8.2	> 7.2	
	K	87	8.7	6.7	8.7	> 8.2	

	Reference		Collet ø		Cable ø		Notes
	Type	Code	ø A	ø B	max.	min.	
1S	L	22	2.2	–	2.2	1.2	2)
	L	32	3.2	–	3.2	> 2.2	2)
	L	42	4.2	–	4.2	> 3.2	2)
	L	52	5.2	–	5.2	> 4.2	2)
	L	62	6.2	–	6.2	> 5.2	2)
	L	66	6.6	–	6.5	5.9	1) 2)
2S	C	27	2.7	–	2.7	1.3	
	C	32	3.2	–	3.2	> 2.5	
	C	42	4.2	–	4.2	> 3.2	
	C	52	5.2	–	5.2	> 4.2	
	C	62	6.2	–	6.2	> 5.2	
	C	72	7.2	6.7	7.2	> 6.2	
	C	82	8.2	6.7	8.2	> 7.2	
	C	87	8.7	6.7	8.7	> 8.2	
	K	97	9.7	9.0	9.7	> 8.7	
	K	11	10.5	9.0	10.5	> 9.5	
	L	32	3.2	–	3.2	2.5	2)
	L	42	4.2	–	4.2	> 3.2	2)
	L	52	5.2	–	5.2	> 4.2	2)
	L	62	6.2	–	6.2	> 5.2	2)
	L	72	7.2	–	7.2	> 6.2	2)
	L	82	8.2	–	8.2	> 7.2	2)
	L	87	8.7	–	8.7	> 8.2	1) 2)

Note: All dimensions are in millimetres.
1) these collets cannot be used for connectors models with nut for fitting a bend relief. 2) these collets cannot be used for elbow connectors. 3) the inner diameter of the smallest bend relief available is 2.5 mm.

C, K and L type collets for S series

C type



K type
oversize
cable collet

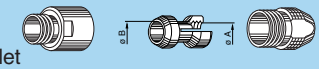

L type
(non EMC)



	Reference		Collet ø		Cable ø		Notes
	Type	Code	ø A	ø B	max.	min.	
3S	C	42	4.2	7.7	4.2	2.6	
	C	57	5.7	7.7	5.7	4.3	
	C	72	7.2	7.7	7.2	5.8	
	C	87	8.7	8.7	8.7	7.3	
	C	97	9.7	9.0	9.7	8.8	
	C	11	10.5	9.0	10.5	9.8	
	K	12	12.2	–	12.0	11.1	
	K	13	13.2	12.2	13.0	12.1	
	L	42	4.2	–	4.2	2.6	2)
	L	57	5.7	–	5.7	> 4.2	2)
	L	72	7.2	–	7.2	> 5.7	2)
	L	87	8.7	–	8.7	> 7.2	2)
	L	97	9.7	–	9.7	> 8.7	2)
	L	11	10.7	–	10.7	> 9.7	1) 2)
4S	C	52	5.2	–	5.0	4.1	
	C	62	6.2	–	6.0	5.1	
	C	72	7.2	–	7.0	6.1	
	C	82	8.2	–	8.0	7.1	
	C	92	9.2	–	9.0	8.1	
	C	10	10.2	–	10.0	9.1	
	C	11	11.2	–	11.0	10.1	

	Reference		Collet ø		Cable ø		Notes
	Type	Code	ø A	ø B	max.	min.	
4S	C	12	12.2	–	12.0	11.1	
	C	13	13.2	12.2	13.0	12.6	
	K	14	14.2	–	14.0	13.1	1)
	K	15	15.2	–	15.0	14.1	1)
	K	16	16.2	–	16.0	15.1	1)
	K	17	17.2	–	17.0	16.1	1)
	K	18	18.2	–	18.0	17.1	1)
	K	19	19.2	–	19.0	18.1	1)
	K	20	20.2	19.7	20.0	19.1	1)
	K	21	21.2	19.7	21.0	20.1	1)
	K	22	22.2	19.7	22.0	21.1	1)
	L	52	5.2	–	5.0	4.1	2)
	L	62	6.2	–	6.0	5.1	2)
	L	72	7.2	–	7.0	6.1	2)
	L	82	8.2	–	8.0	7.1	2)
	L	92	9.2	–	9.0	8.1	2)
	L	10	10.2	–	10.0	9.1	2)
	L	11	11.2	–	11.0	10.1	2)
	L	12	12.2	–	12.0	11.1	2)
	L	13	13.2	–	13.0	12.6	2)

Note: All dimensions are in millimetres.
1) these collets cannot be used for connectors models with nut for fitting a bend relief.
2) these collets cannot be used for elbow connectors.

C, K and L type collets for S series

C type



K type
oversize
cable collet

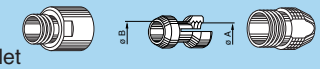

L type
(non EMC)



	Reference		Collet ø		Cable ø		Notes
	Type	Code	ø A	ø B	max.	min.	
5S	C	72	7.2	–	7.0	6.1	1)
	C	82	8.2	–	8.0	7.1	1)
	C	92	9.2	–	9.0	8.1	1)
	C	10	10.2	–	10.0	9.1	1)
	C	11	11.2	–	11.0	10.1	1)
	C	12	12.2	–	12.0	11.1	1)
	C	13	13.2	–	13.0	12.1	1)
	C	14	14.2	–	14.0	13.1	1)
	C	15	15.2	–	15.0	14.1	1)
	C	16	16.2	–	16.0	15.1	1)
	C	17	17.2	–	17.0	16.1	1)
	C	18	18.2	–	18.0	17.1	1)
	C	19	19.2	–	19.0	18.1	1)
	C	20	20.2	19.7	20.0	19.1	1)
	C	21	21.2	19.7	21.0	20.1	1)
	C	22	22.2	19.7	22.0	21.1	1)
	K	23	23.2	–	23.0	22.1	1)
	K	24	24.2	–	24.0	23.1	1)
	K	25	25.2	–	25.0	24.1	1)

	Reference		Collet ø		Cable ø		Notes
	Type	Code	ø A	ø B	max.	min.	
5S	K	26	26.2	–	26.0	25.1	1)
	K	27	27.2	–	27.0	26.1	1)
	K	28	28.2	27.2	28.0	27.1	1)
	K	29	29.2	27.2	29.0	28.1	1)
	K	30	30.2	27.2	30.0	29.1	1)
	L	92	9.2	–	9.0	8.1	1) 2)
	L	10	10.2	–	10.0	9.1	1) 2)
	L	11	11.2	–	11.0	10.1	1) 2)
	L	12	12.2	–	12.0	11.1	1) 2)
	L	13	13.2	–	13.0	12.1	1) 2)
	L	14	14.2	–	14.0	13.1	1) 2)
	L	15	15.2	–	15.0	14.1	1) 2)
	L	16	16.2	–	16.0	15.1	1) 2)
	L	17	17.2	–	17.0	16.1	1) 2)
	L	18	18.2	–	18.0	17.1	1) 2)
	L	19	19.2	–	19.0	18.1	1) 2)
	L	20	20.2	–	20.0	19.1	1) 2)
	L	21	21.2	–	21.0	20.1	1) 2)

Note: All dimensions are in millimetres.
The 5S.112 is only available with L type of collet.
1) these collets cannot be used for connectors models with nut for fitting a bend relief.
2) these collets cannot be used for elbow connectors.

C, K and L type collets for S series

C type



K type
oversize cable collet

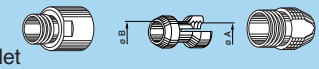

L type
(non EMC)



	Reference		Collet ø		Cable ø		Notes
	Type	Code	ø A	ø B	max.	min.	
6S	C	12	12.2	–	12.0	11.1	1)
	C	13	13.2	–	13.0	12.1	1)
	C	14	14.2	–	14.0	13.1	1)
	C	15	15.2	–	15.0	14.1	1)
	C	16	16.2	–	16.0	15.1	1)
	C	17	17.2	–	17.0	16.1	1)
	C	18	18.2	–	18.0	17.1	1)
	C	19	19.2	–	19.0	18.1	1)
	C	20	20.2	–	20.0	19.1	1)
	C	21	21.2	–	21.0	20.1	1)
	C	22	22.2	–	22.0	21.1	1)
	C	23	23.2	–	23.0	22.1	1)
	C	24	24.2	–	24.0	23.1	1)
	C	25	25.2	–	25.0	24.1	1)
	C	26	26.2	–	26.0	25.1	1)
	C	27	27.2	–	27.0	26.1	1)
	C	28	28.2	27.2	28.0	27.1	1)
	C	29	29.2	27.2	29.0	28.1	1)
	C	30	30.2	27.2	30.0	29.1	1)

	Reference		Collet ø		Cable ø		Notes
	Type	Code	ø A	ø B	max.	min.	
6S	L	12	12.2	–	12.0	11.1	1) 2)
	L	13	13.2	–	13.0	12.1	1) 2)
	L	14	14.2	–	14.0	13.1	1) 2)
	L	15	15.2	–	15.0	14.1	1) 2)
	L	16	16.2	–	16.0	15.1	1) 2)
	L	17	17.2	–	17.0	16.1	1) 2)
	L	18	18.2	–	18.0	17.1	1) 2)
	L	19	19.2	–	19.0	18.1	1) 2)
	L	20	20.2	–	20.0	19.1	1) 2)
	L	21	21.2	–	21.0	20.1	1) 2)
	L	22	22.2	–	22.0	21.1	1) 2)
	L	23	23.2	–	23.0	22.1	1) 2)
	L	24	24.2	–	24.0	23.1	1) 2)
	L	25	25.2	–	25.0	24.1	1) 2)
	L	26	26.2	–	26.0	25.1	1) 2)
	L	27	27.2	–	27.0	26.1	1) 2)
	L	28	28.2	–	28.0	27.1	1) 2)
	L	29	29.2	–	29.0	28.1	1) 2)
	L	30	30.2	–	30.0	29.1	1) 2)

Note: All dimensions are in millimetres.
1) these collets cannot be used for connectors models with nut for fitting a bend relief.
2) these collets cannot be used for elbow connectors..

C and K type collets for E series

C type

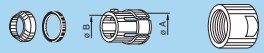

K type
oversize
cable collet



	Reference		Collet ø		Cable ø		Notes
	Type	Code	ø A	ø B	max.	min.	
0E	C	10	1.6	–	1.2	1.0	1)
	C	15	1.6	–	1.5	1.3	1)
	C	20	2.1	–	2.0	1.6	1)
	C	25	3.1	–	2.5	2.1	
	C	30	3.1	–	3.0	2.6	
	C	35	4.2	4.2	3.5	3.1	
	C	40	4.2	4.2	4.0	3.6	
	C	45	5.2	5.2	4.5	4.1	
	C	50	5.2	5.2	5.0	4.6	
1E	C	15	1.6	–	1.5	1.3	
	C	20	2.2	–	2.0	1.6	
	C	25	3.2	–	2.5	2.1	
	C	30	3.2	–	3.0	2.6	
	C	35	4.2	–	3.5	3.1	
	C	40	4.2	–	4.0	3.6	
	C	45	5.2	–	4.5	4.1	
	C	50	5.2	–	5.0	4.6	
	C	55	6.2	6.2	5.5	5.1	
	C	60	6.2	6.2	6.0	5.6	
	C	65	7.2	6.7	6.5	6.1	
	K	70	7.2	–	7.0	6.6	
	K	75	8.2	8.2	7.5	7.1	
	K	80	8.2	8.2	8.0	7.6	
	K	85	9.2	8.6	8.5	8.1	
2E	C	15	2.2	–	1.5	1.3	
	C	20	2.2	–	2.0	1.6	
	C	25	3.2	–	2.5	2.1	
	C	30	3.2	–	3.0	2.6	
	C	35	4.2	–	3.5	3.1	
	C	40	4.2	–	4.0	3.6	
	C	45	5.2	–	4.5	4.1	
	C	50	5.2	–	5.0	4.6	
	C	55	6.2	–	5.5	5.1	
	C	60	6.2	–	6.0	5.6	

	Reference		Collet ø		Cable ø		Notes
	Type	Code	ø A	ø B	max.	min.	
2E	C	65	7.2	–	6.5	6.1	
	C	70	7.2	–	7.0	6.6	
	C	75	8.2	8.2	7.5	7.1	
	C	80	8.2	8.2	8.0	7.6	
	C	85	9.2	8.6	8.5	8.1	
	K	90	9.2	–	9.0	8.6	
	K	95	10.2	10.2	9.5	9.1	
	K	10	10.2	10.2	10.0	9.6	
	K	11	11.2	10.6	10.5	10.1	
3E	C	30	3.2	–	3.0	2.6	
	C	35	4.2	–	3.5	3.1	
	C	40	4.2	–	4.0	3.6	
	C	45	5.2	–	4.5	4.1	
	C	50	5.2	–	5.0	4.6	
	C	55	6.2	–	5.5	5.1	
	C	60	6.2	–	6.0	5.6	
	C	65	7.2	–	6.5	6.1	
	C	70	7.2	–	7.0	6.6	
	C	75	8.2	–	7.5	7.1	
	C	80	8.2	–	8.0	7.6	
	C	85	9.2	–	8.5	8.1	
	C	90	9.2	–	9.0	8.6	
	C	95	10.2	10.2	9.5	9.1	
	C	10	10.2	10.2	10.0	9.6	
	C	11	11.2	10.6	10.5	10.1	
	K	11	12.3	–	12.0	10.6	
	K	12	13.8	13.8	12.8	12.1	
	K	13	13.8	13.8	13.5	12.9	
	K	14	15.3	15.3	14.0	13.6	
	K	15	15.3	15.3	15.0	14.1	

Note: All dimensions are in millimetres.
1) the inner diameter of the smallest bend relief available is 2.5 mm.

C and K type collets for E series

C type

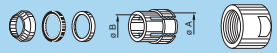

K type
oversize
cable collet



	Reference		Collet ø		Cable ø		Notes
	Type	Code	ø A	ø B	max.	min.	
4E	C	50	6.3	–	5.0	4.8	
	C	55	6.3	–	5.5	5.1	
	C	60	6.3	–	6.0	5.6	
	C	65	7.3	–	6.5	6.1	
	C	70	7.3	–	7.0	6.6	
	C	75	8.3	–	7.5	7.1	
	C	80	8.3	–	8.0	7.6	
	C	85	9.3	–	8.5	8.1	
	C	90	9.3	–	9.0	8.6	
	C	95	10.8	–	9.5	9.1	
	C	10	10.8	–	10.5	9.6	
	C	11	12.3	–	12.0	10.6	
	C	12	13.8	13.8	12.8	12.1	
	C	13	13.8	13.8	13.5	12.9	
	C	14	15.3	15.3	14.0	13.6	
	C	15	15.3	15.3	15.0	14.1	
	K	16	17.8	–	16.5	15.6	
	K	17	17.8	–	17.5	16.6	
	K	18	19.8	–	18.5	17.6	
	K	19	19.8	–	19.5	18.6	
	K	20	21.8	–	20.5	19.6	
	K	21	21.8	–	21.5	20.6	
	K	22	23.8	23.8	22.5	21.6	
	K	23	23.8	23.8	23.5	22.6	

	Reference		Collet ø		Cable ø		Notes
	Type	Code	ø A	ø B	max.	min.	
5E	C	10	11.8	–	10.5	9.6	
	C	11	11.8	–	11.5	10.6	
	C	12	13.8	–	12.5	11.6	
	C	13	13.8	–	13.5	12.6	
	C	14	15.8	–	14.5	13.6	
	C	15	15.8	–	15.5	14.6	
	C	16	17.8	–	16.5	15.6	
	C	17	17.8	–	17.5	16.6	
	C	18	19.8	–	18.5	17.6	
	C	19	19.8	–	19.5	18.6	
	C	20	21.8	–	20.5	19.6	
	C	21	21.8	–	21.5	20.6	
	C	22	23.8	23.8	22.5	21.6	
	C	23	23.8	23.8	23.5	22.6	
6E	C	14	14.2	–	14.0	13.0	
	C	15	15.2	–	15.0	14.1	
	C	16	15.7	–	15.5	14.6	
	C	17	16.7	–	16.5	15.6	
	C	18	18.2	–	18.0	17.1	
	C	21	23.2	–	21.5	20.6	
	C	22	23.2	–	22.0	21.1	
	C	23	23.2	–	23.0	22.1	
	C	27	27.2	–	27.0	26.1	
	L	30	30.2	–	30.0	29.5	

Note: All dimensions are in millimetres.

C and K type collets for L series

C type

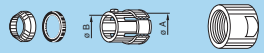

K type
oversize
cable collet



	Reference		Collet ø		Cable ø		Notes
	Type	Code	ø A	ø B	max.	min.	
0L	C	10	1.6	–	1.2	1.0	
	C	15	1.6	–	1.5	1.3	
	C	20	2.1	–	2.0	1.6	
	C	25	3.1	–	2.5	2.1	
	C	30	3.1	–	3.0	2.6	
	C	35	4.2	4.2	3.5	3.1	
	C	40	4.2	4.2	4.0	3.6	
	C	45	5.2	5.2	4.5	4.1	
	C	50	5.2	5.2	5.0	4.6	
1L	C	15	1.6	–	1.5	1.3	
	C	20	2.2	–	2.0	1.6	
	C	25	3.2	–	2.5	2.1	
	C	30	3.2	–	3.0	2.6	
	C	35	4.2	–	3.5	3.1	
	C	40	4.2	–	4.0	3.6	
	C	45	5.2	–	4.5	4.1	
	C	50	5.2	–	5.0	4.6	
	C	55	6.2	6.2	5.5	5.1	
	C	60	6.2	6.2	6.0	5.6	
	C	65	7.2	6.7	6.5	6.1	
	K	70	7.2	–	7.0	6.6	
	K	75	8.2	8.2	7.5	7.1	
	K	80	8.2	8.2	8.0	7.6	
	K	85	9.2	8.6	8.5	8.1	

	Reference		Collet ø		Cable ø		Notes
	Type	Code	ø A	ø B	max.	min.	
2L	C	15	2.2	–	1.5	1.3	
	C	20	2.2	–	2.0	1.6	
	C	25	3.2	–	2.5	2.1	
	C	30	3.2	–	3.0	2.6	
	C	35	4.2	–	3.5	3.1	
	C	40	4.2	–	4.0	3.6	
	C	45	5.2	–	4.5	4.1	
	C	50	5.2	–	5.0	4.6	
	C	55	6.2	–	5.5	5.1	
	C	60	6.2	–	6.0	5.6	
	C	65	7.2	–	6.5	6.1	
	C	70	7.2	–	7.0	6.6	
	C	75	8.2	8.2	7.5	7.1	
	C	80	8.2	8.2	8.0	7.6	
	C	85	9.2	8.6	8.5	8.1	
	K	90	9.2	–	9.0	8.6	
	K	95	10.2	10.2	9.5	9.1	
	K	10	10.2	10.2	10.0	9.6	
	K	11	11.2	10.6	10.5	10.1	

Note: All dimensions are in millimetres.

Variant (S, E and L series)

Bend relief for S series models with collet

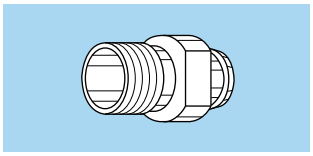

Need to be ordered

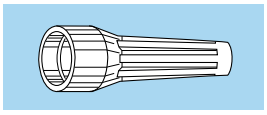

Ref.	Collet		Need to be ordered separately (see pages 167 and 168)
	Type	Code	
00 Z	C	17 to 31	GMA.00.0●●.D●
	K	37 to 42	GMA.0B.0●●.D●
	L	27 to 31	GMA.00.0●●.D●
0S Z	C	32 to 44	GMA.0B.0●●.D●
	K	52 to 62	GMA.1B.0●●.D●
	L	32 to 48	GMA.0B.0●●.D●
1S Z	C	32 to 62	GMA.1B.0●●.D●
	K	72 to 87	GMA.2B.0●●.D●
	L	32 to 66	GMA.1B.0●●.D●
2S Z	C	42 to 87	GMA.2B.0●●.D●
	K	97 to 11	GMA.3B.0●●.D●
	L	42 to 87	GMA.2B.0●●.D●
3S Z	C	57 to 97	GMA.3B.0●●.D●
	K	12 to 13	GMA.4B.0●●.D●
	L	57 to 97	GMA.3B.0●●.D●
4S Z	C	82 to 13	GMA.4B.0●●.D●
	L	82 to 13	GMA.4B.0●●.D●

Bend relief for E and L series models with collet

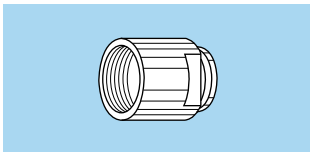

Need to be ordered

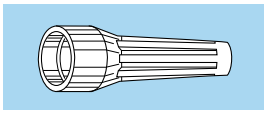

Ref.	Collet		Need to be ordered separately (see pages 167 and 168)
	Type	Code	
0E 0L Z	C	10 to 50	GMA.0B.●●●.●●
1E 1L Z	C	15 to 65	GMA.1B.●●●.●●
	K	70 to 85	GMA.2B.●●●.●●
2E 2L Z	C	15 to 85	GMA.2B.●●●.●●
	K	90 to 10	GMA.3B.●●●.●●
3E Z	C	30 to 10	GMA.3B.●●●.●●
	K	11 to 15	GMA.4B.●●●.●●
4E Z	C	50 to 15	GMA.4B.●●●.●●

Note: All dimensions are in millimetres.

Colour of connectors shell made of plastic material and aluminium alloys

Ref.	Colour	Plastic shell			Aluminium alloys	
		PSU	PPSU	PA.6	Anodized colour	Anodized colour for bend relief collet nut
A	blue			●	●	
B	white	●		●		
G	grey	●		●		
J	yellow			●	●	
M	brown			●		
N	black			●	●	
R	red			●	●	
S	orange			●		
T	natural				●	
V	green			●	●	
L	black					●
X	natural					●
F	cream		●			

Note: other anodizing colours are available for connectors with collet nut for bend relief. Please consult us.

Watertight and vacumtight socket and coupler models (S, E and L series)

	Reference		Model
	Watertight	Vacuumtight	
S	**P**	**PV**	EWB, HCP, HGP, HGW, SWH
E	**P**	**PV**	EBR, HGP, SWH
L	**P**	**PV**	HGG

O-ring and gasket material (E and L series)

Standard connectors are delivered with silicone o-ring and gaskets. The vacuumtight models, identified with the letter «PV», are delivered with Viton® gaskets. Other gaskets material can be delivered upon special request.

Ref.	O-ring material
H	FPM (Viton®)
E	EPDM
D	FPM (Viton®) and collet nut for bend relief

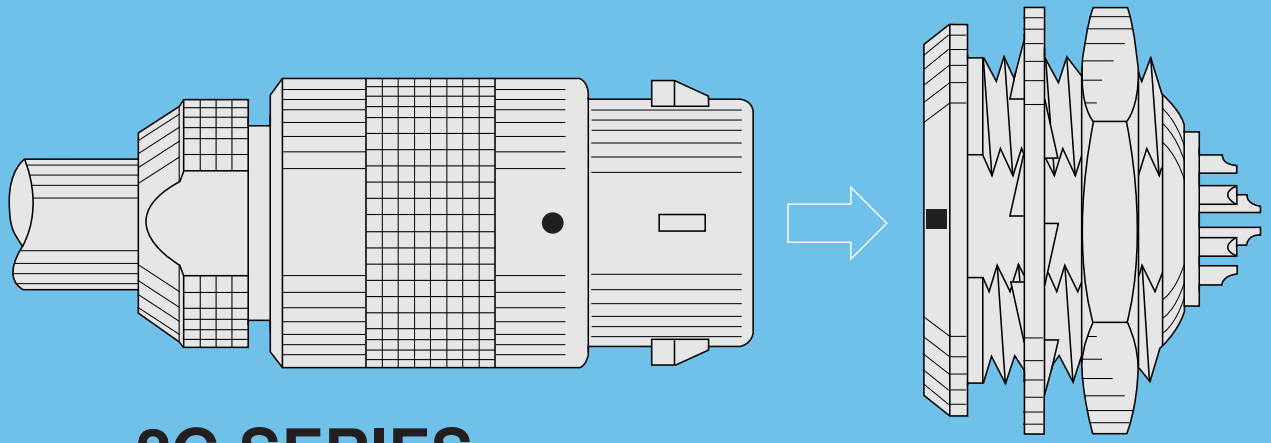

2G SERIES

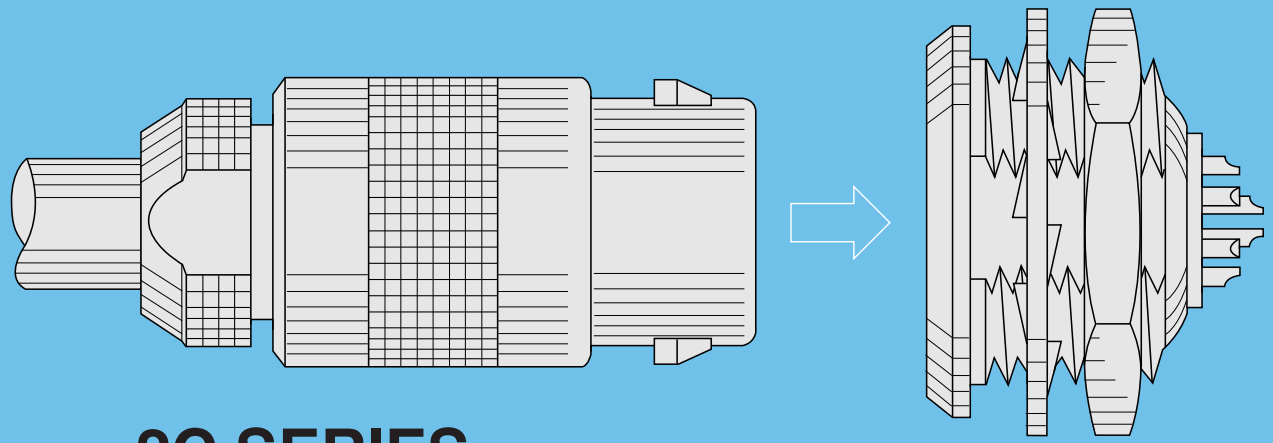

2C SERIES

2G Series

The 2G series with key (G) provides the same advantages of space saving due to its small dimensions as the 2C series and is available in multipole type with 18 contacts.

Metal housing models (page 135)

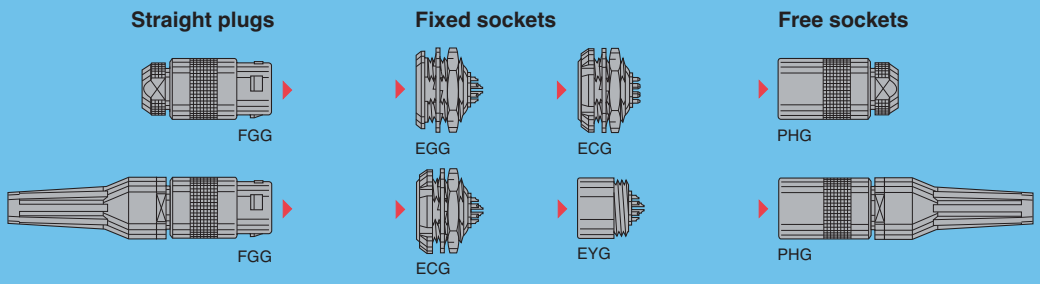

Part Numbering System

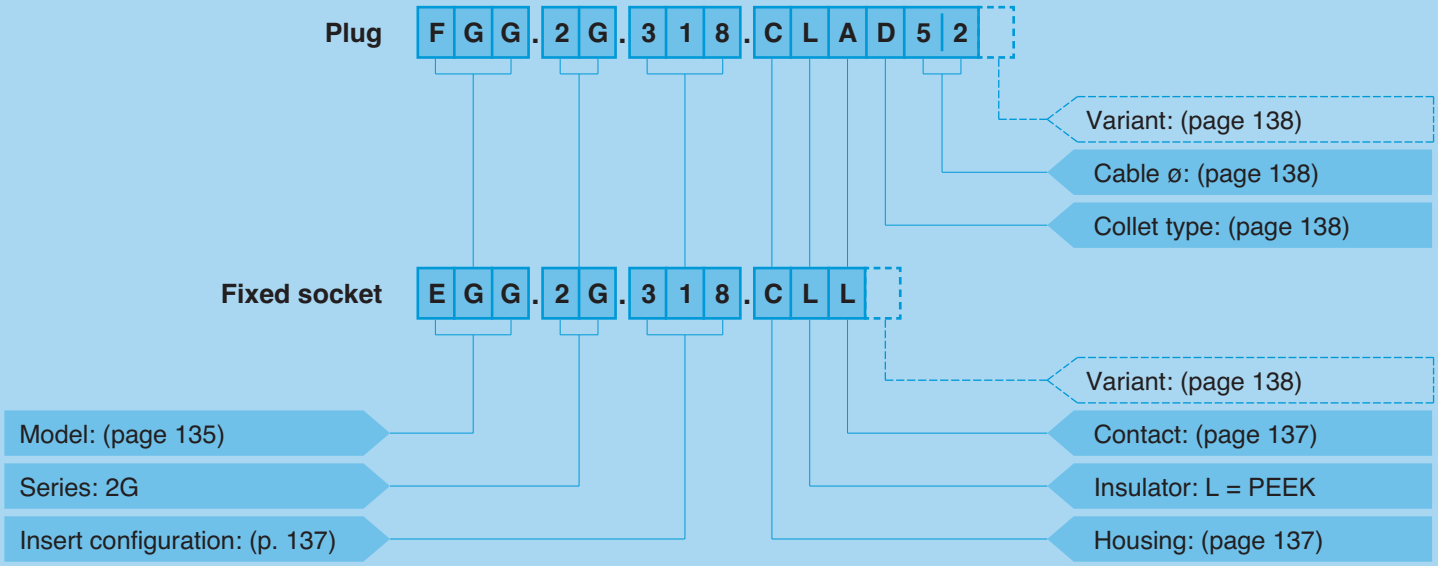

FGG.2G.318.CLAD52 = straight plug with cable collet, 2G series, multipole type with 18 contacts, outer shell in chrome-plated brass, PEEK insulator, male solder contacts, D type collet for 5.2 mm diameter cable.

EGG.2G.318.CLL = fixed socket, 2G series, multipole type with 18 contacts, outer shell in chrome-plated brass, PEEK insulator, female solder contacts.

Part Section Showing Internal Components

Fixed socket

1. outer shell
2. hexagonal nut
3. locking washer
4. insulator
5. female contact

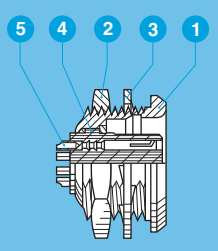

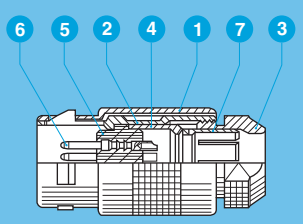

Straight plug

1. outer shell
2. latch sleeve
3. collet nut
4. split centre-piece
5. insulator
6. male contact
7. collet

Metal housing models

Technical Characteristics

Mechanical and Climatical

Characteristics	Value	Standard
Endurance	> 500 cycles	IEC 60512-5 test 9a
Humidity	up to 95% at 60° C	
Temperature range	- 55° C, + 250° C	
Salt spray corrosion test	> 1000h	IEC 60512-6 test 11f
Protection index	IP50	IEC 60529
Climatical category	55/175/21	IEC 60068-1

Note:
The various tests have been carried out with FGG and EGG connector pairs, with chrome-plated brass shell and PEEK insulator.
Detailed electrical characteristics, as well as materials and treatment are presented in the chapter Technical Characteristics on page 205.

FGG.2G Straight plug, key (G), cable collet



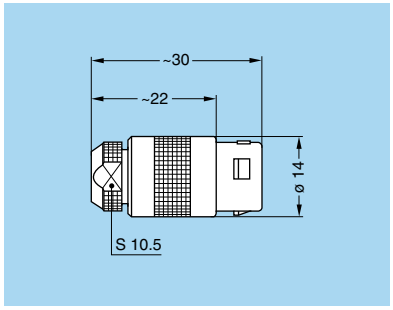

Cable assembly (page 140)

FGG.2G Straight plug, key (G), cable collet and nut for fitting a bend relief [1)]



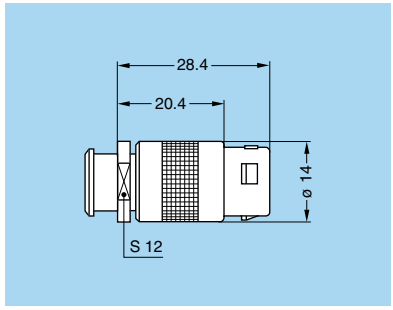

Cable assembly (page 140)

Note: [1)] to order, add a «Z» at the end of the reference.
The bend relief must be ordered separately (see page 167).

EGG.2G Fixed socket, nut fixing, key (G)



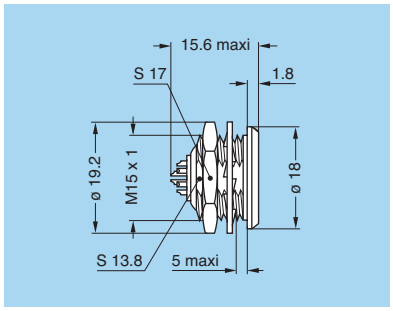

Panel cut-out (page 140)

Note: all dimensions are in millimetres.

ECG.2G Fixed socket with two nuts, key (G) (back panel mounting)



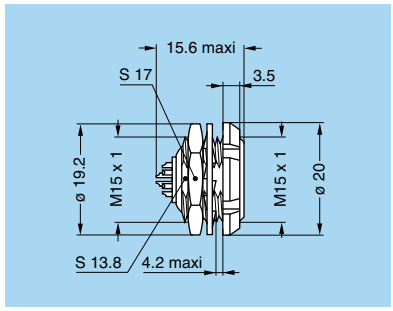

Panel cut-out (page 140)

ECG.2G Fixed socket with two nuts, key (G), straight contact for printed circuit (back panel mounting)



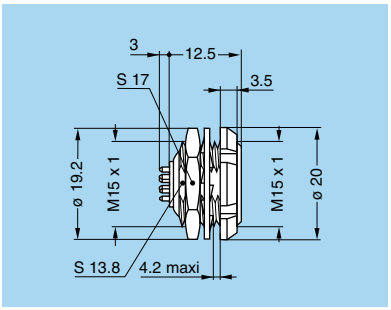

Panel cut-out (page 140)

PCB drilling pattern (page 140)

EYG.2G Fixed socket, key (G), protruding shell (screw fixing on the panel)



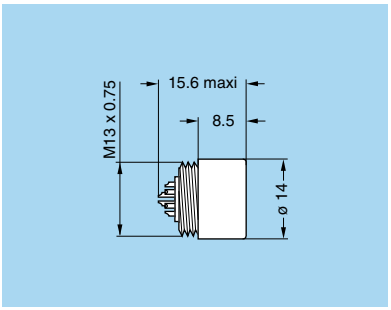

Panel cut-out (page 140)

PHG.2G Free socket, key (G), cable collet



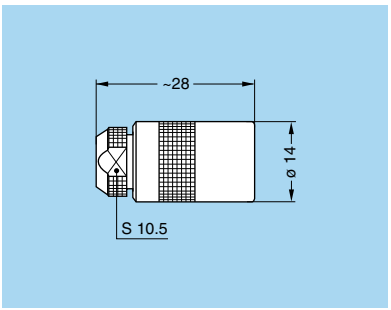

Cable assembly (page 140)

Note: all dimensions are in millimetres.

PHG.2G Free socket, key (G), cable collet and nut for fitting a bend relief [1)]



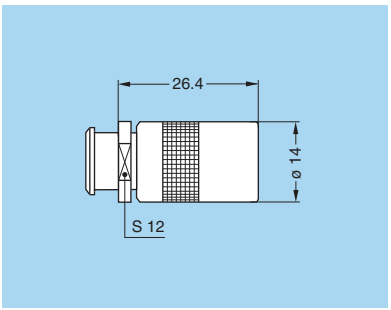

Cable assembly (page 140)

Note: [1)] to order, add a «Z» at the end of the reference.
The bend relief must be ordered separately (see page 167).

Insert configurations (2G series)

	Male solder contacts	Female solder contacts	Reference	Series	Contact ø (mm)	Contact type: Solder	Contact type: Print	Test voltage (kV rms)[1) 2)]	Test voltage (kV dc)[1) 2)]	Rated current (A)[1)]
18			318	2G	0.7	●	●	0.85	1.2	5.5

Note: 1) see calculation method, caution and suggested standard on page 213.
2) lowest measured value; contact to contact or contact to shell.

Housings (2G series)

Ref.	Outer shell and collet nut		Latch sleeve		Other metallic components		Note
	Material	Surf. treatment	Material	Surf. treatment	Material	Surf. treatment	
C	Brass	chrome	brass/bronze	nickel	brass	nickel	●
N	Brass	nickel	brass/bronze	nickel	brass	nickel	○
K	Brass	black chrome	brass/bronze	nickel	brass	nickel	●

● First choice alternative
○ Special order alternative

Note: detailed characteristics of these materials and treatments are presented on page 205.

Contacts (2G series)

Ref.	Contact type
A	Male solder
L	Female solder
N	Female print

Collets (2G series)

D type collets for 2G series

D type



	Reference		Collet ø		Cable ø	
	Type	Code	ø A	ø B	max.	min.
2G	**D**	**52**	5.2	–	5.1	4.5
	D	**62**	6.2	–	6.1	5.5
	D	**72**	7.2	6.2	7.1	6.5
	D	**80**	8.0	6.2	7.9	7.5

Note: all dimensions are in millimetres.

Variant (2G series)

Bend relief for 2G series models with collet

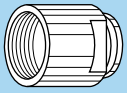

Need to be ordered

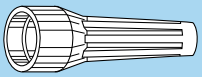

	Ref.	Collet		Need to be ordered separately (see pages 167 and 168)
		Type	Code	
2G	**Z**	D	52 to 80	GMA.2B.●●●.●●

Accessories (2G series)

BRE Blanking caps for fixed and free sockets



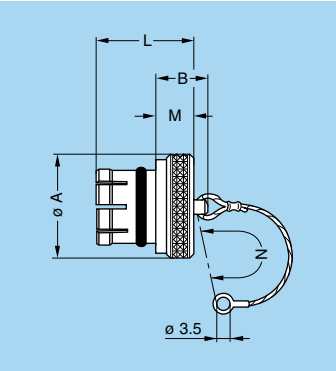

- Body material: Nickel-plated brass (Ni 3 µm)
- Lanyard material: Stainless steel
- O-ring material: Silicone rubber or FPM

Part number	Dimensions (mm)				
	A	B	L	M	N
BRE.2G.200.NAS	18	12	10.6	6	85

Note: these caps are suitable for use with any alignment key configuration. The last letter «S» of the part number stands for the material of the O ring (silicone rubber). O-ring's made from FPM are also available; if required, replace the letter «S» by «V».

- Maximum operating temperature: 200°C
- Watertightness: IP61 according to IEC 60529

BRF Blanking caps for fixed sockets



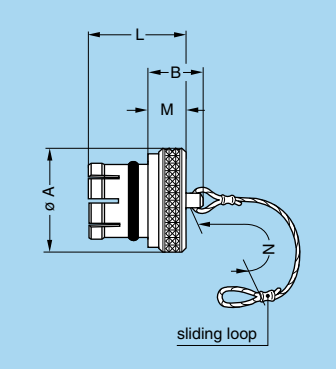

- Body material: Nickel-plated brass (Ni 3 µm)
- Lanyard material: Stainless steel
- O-ring material: Silicone rubber or FPM

Part number	Dimensions (mm)				
	A	B	L	M	N
BRF.2G.200.NAS	18	12	14	6	85

Note: this caps are suitable for use with any alignment key configuration. The last letter «S» of the part number stands for the material of the O ring (silicone rubber). O-ring's made from FPM are also available; if required, replace the letter «S» by «V».

- Maximum operating temperature: 200°C
- Watertightness: IP61 according to IEC 60529

FFM Nut for bend relief

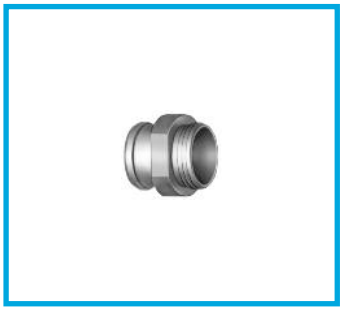

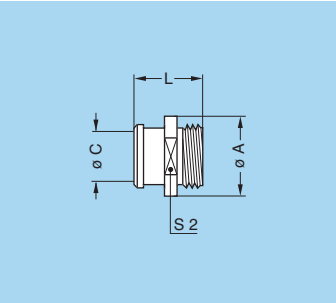

Part number	Dimensions (mm)			
	A	C	L	S2
FFM.2C.130.LC	14	8	12.2	12

Note: for bend reliefs to be used with this nut see section «Accessories» page 141.

- Material: Chrome-plated brass (0.3 µm)

Note: other accessories are also available. See section «Accessories» on page 160.

Tooling (2G series)

Please consult the «Tooling» section (page 173).

Panel cut-outs (2G series)

Panel cut-outs

EGG - ECG

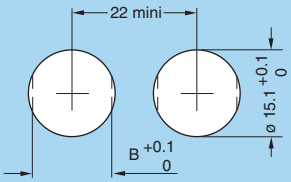

EYG

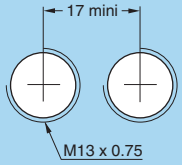

PCB drilling pattern

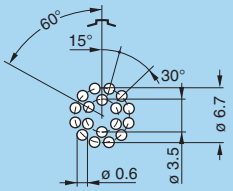

Note: mounting nut torque: 6 Nm (1N = 0.102 kg)

Cable assembly (2G series)

Cable stripping lengths

	Type	Contact ø (mm)	Cable stripping lengths (mm)		
			L	S	T
2G	318	0.7	9	7	3

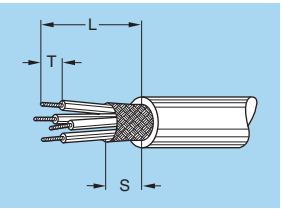

Note: the tolerances on these dimensions are: L: ± 0.5 mm; S: ± 0.5 mm; T: ± 0.2 mm.

2C Series

In many applications, it is necessary to use multipole connectors which have shortened dimensions but require high contact density. LEMO short series connectors, which are shorter than 30 mm, perfectly meet these needs.
The 2C series, featuring a hermaphroditic insert, is available in multipole type up to 14 contacts.

Metal housing models (page 142)

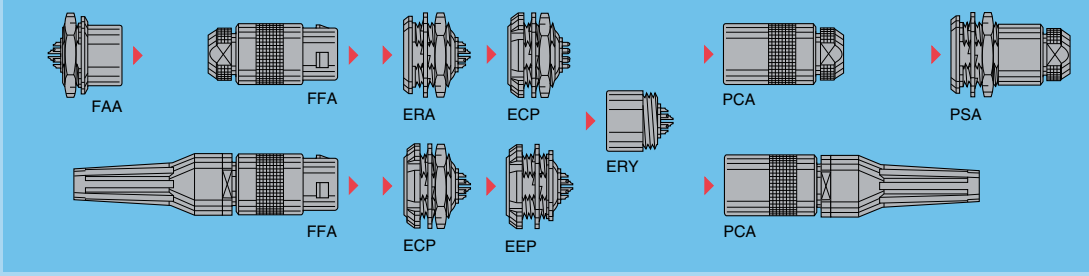

Watertight or vacuumtight models (page 144)

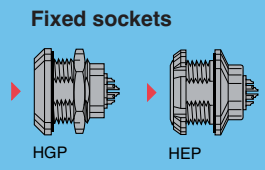

Part Numbering System

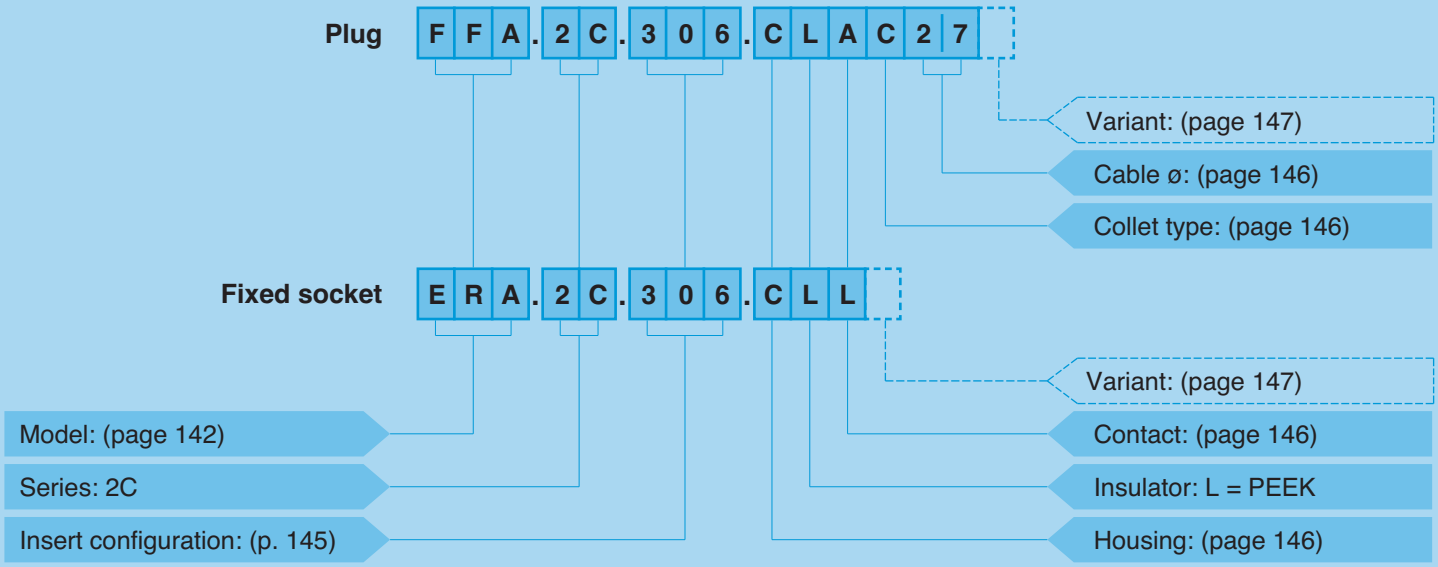

FFA.2C.306.CLAC27 = straight plug with cable collet, 2C series, multipole type with 6 contacts, outer shell in chrome-plated brass, PEEK insulator, male solder contacts, C type collet for 2.7 mm diameter cable.

ERA.2C.306.CLL = fixed socket, nut fixing, 2C series, multipole type with 6 contacts, outer shell in chrome-plated brass, PEEK insulator, female solder contacts.

Part Section Showing Internal Components

Fixed socket

1. outer shell
2. hexagonal nut
3. locking washer
4. insulator
5. male contact
6. female contact

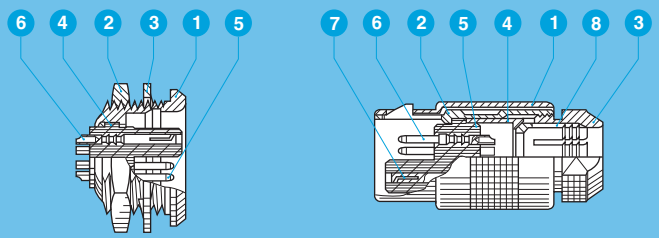

Straight plug

1. outer shell
2. latch sleeve
3. collet nut
4. split centre-piece
5. insulator
6. male contact
7. female contact
8. collet

Metal housing models

Technical Characteristics

Mechanical and Climatical

Characteristics	Value	Standard
Endurance	> 500 cycles	IEC 60512-5 test 9a
Humidity	up to 95% at 60° C	
Temperature range	- 55° C, + 250° C	
Salt spray corrosion test	> 1000h	IEC 60512-6 test 11f
Protection index	IP50	IEC 60529
Climatical category	55/175/21	IEC 60068-1

Note:
The various tests have been carried out with FFA and ERA connector pairs, with chrome-plated brass shell and PEEK insulator.
Detailed electrical characteristics, as well as materials and treatment are presented in the chapter Technical Characteristics on page 205.

FFA.2C Straight plug, cable collet



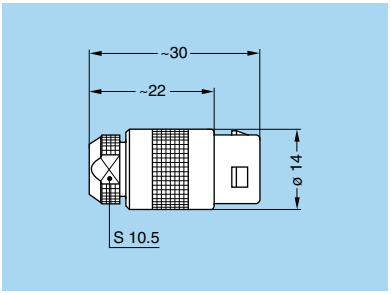

Cable assembly (page 148)

FFA.2C Straight plug, cable collet and nut for fitting a bend relief [1)]



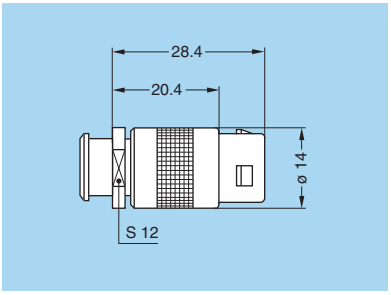

Cable assembly (page 148)

Note: [1)] to order, add a «Z» at the end of the reference.
The bend relief must be ordered separately (see page 167).

FAA.2C Fixed plug, nut fixing, non-latching



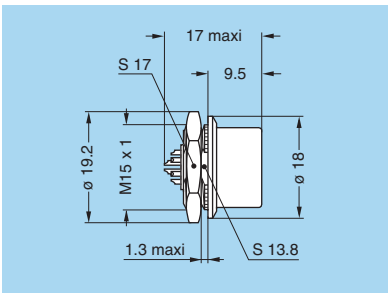

Panel cut-out (page 148)

Note: all dimensions are in millimetres.

ERA.2C Fixed socket, nut fixing



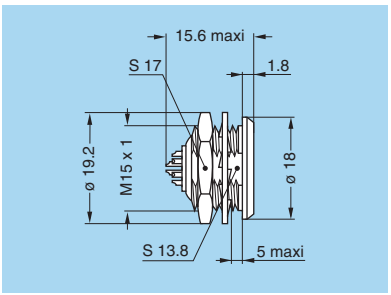

Panel cut-out (page 148)

ECP.2C Fixed socket with two nuts (back panel mounting)



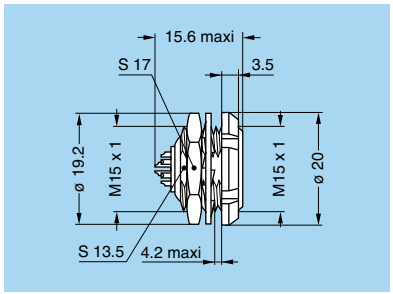

Panel cut-out (page 148)

ECP.2C Fixed socket with two nuts, straight contact for printed circuit (back panel mounting)



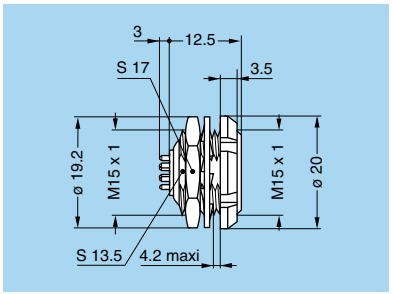

Panel cut-out (page 148)

PCB drilling pattern (page 148)

EEP.2C Fixed socket, nut fixing (back panel mounting)



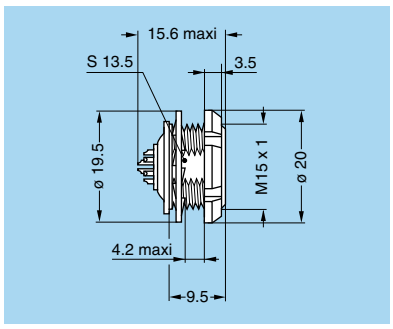

Panel cut-out (page 148)

ERY.2C Fixed socket, protruding shell, (screw fixing on the panel)



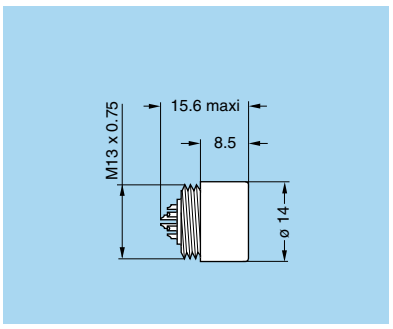

Panel cut-out (page 148)

PCA.2C Free socket, cable collet



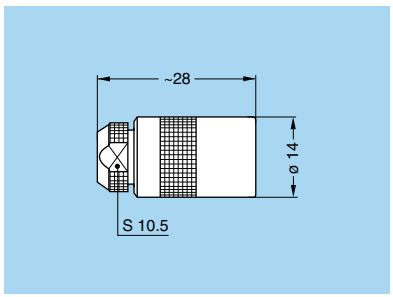

Cable assembly (page 148)

PCA.2C Free socket, cable collet and nut for fitting a bend relief [1)]



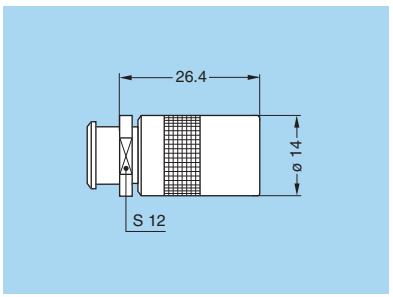

Cable assembly (page 148)

Note: [1)] to order, add a «Z» at the end of the reference.
The bend relief must be ordered separately (see page 167).

PSA.2C Fixed socket nut fixing, cable collet



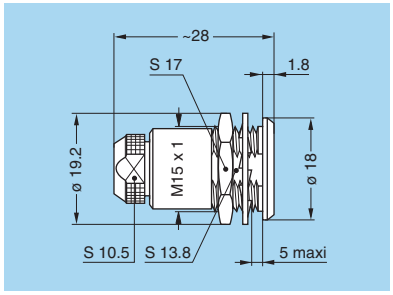

Panel cut-out (page 148)

Note: all dimensions are in millimetres.

Watertight or vacuumtight models

These socket allow the device on which they are fitted to reach a protection index of IP68 as per IEC 60529. They are fully compatible with plugs of the same series and are widely used for portable radios, military, laboratory equipment, aviation, etc.
These models are identified by a letter «P» at the end of the reference.
These models are also available in a vacuumtight version. Such models are identified by an additional letter «V» at the end of the part number (certificate on request).
Epoxy resin is used to seal these models.

Technical Characteristics

Mechanical and Climatical

Characteristics	Value	Standard
Endurance	> 500 cycles	IEC 60512-5 test 9a
Humidity	up to 95% at 60° C	
Temperature range	- 20° C, + 80° C	
Salt spray corrosion test	> 1000h	IEC 60512-6 test 11f

Characteristics	Value	Standard
Climatical category	20/80/21	IEC 60068-1
Leakage rate (He)[1)]	$< 10^{-7}$ mbar.l.s^{-1}	IEC 60512-7 test 14b
Maximum operating pressure	5 bar	IEC 60512-7 test 14d

Note: [1)] only for vacuumtight models.

HGP.2C Fixed socket, nut fixing, watertight or vacuumtight



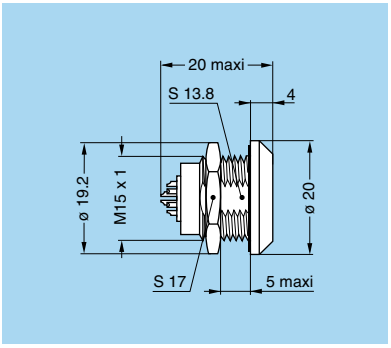

Panel cut-out (page 148)

HEP.2C Fixed socket, nut fixing, watertight or vacuumtight (back panel mounting)



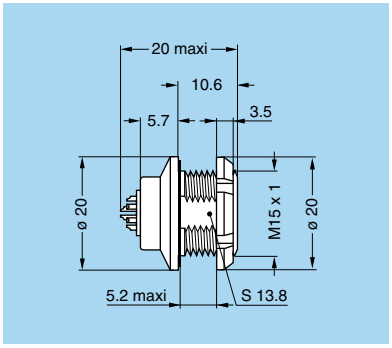

Panel cut-out (page 148)

Insert configurations (2C series)

	Male solder contacts	Female solder contacts	Reference	Series	Contact ø (mm)	Contact type: Solder	Contact type: Print	Test voltage (kV rms)[1) 2)]	Test voltage (kV dc)[1) 2)]	Rated current (A)[1)]
2			**302**	2C	1.6	●	–	1.80	2.40	20
3			**303**	2C	1.3	●	–	1.50	2.10	15
4			**304**	2C	1.3	●	–	1.80	2.40	15
6			**306**	2C	1.3	●	–	1.50	2.10	12
8			**308**	2C	0.7	●	●	0.95	1.35	7
10			**310**	2C	0.7	●	●	0.95	1.35	7
12			**312**	2C	0.7	●	●	0.60	0.90	5
14			**314**	2C	0.7	●	●	0.60	0.90	5

Note: 1) see calculation method, caution and suggested standard on page 213.
2) lowest measured value; contact to contact or contact to shell.

Housings (2C series)

Ref.	Outer shell and collet nut		Latch sleeve		Other metallic components		Note
	Material	Surf. treatment	Material	Surf. treatment	Material	Surf. treatment	
C	Brass	chrome	brass/bronze	nickel	brass	nickel	●
N	Brass	nickel	brass/bronze	nickel	brass	nickel	○
K	Brass	black chrome	brass/bronze	nickel	brass	nickel	●

● First choice alternative
○ Special order alternative

Note: detailed characteristics of these materials and treatments are presented on page 205.

Contacts (2C series)

Ref.	Contact type
A	Male solder
L	Female solder
N	Female print

Multipole connectors are fitted with hermaphroditic inserts including male and female contacts. However, by convention, the letter indicating the contact type in the part number composition will be the male contact (reference A) for plugs and female contact (reference L) for sockets.

Collets (2C series)

C and L type collets for 2C series

C type

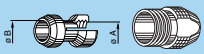

	Reference		Collet ø		Cable ø	
	Type	Code	ø A	ø B	max.	min.
2C	C	27	2.7	–	2.6	2.2
	C	32	3.2	–	3.1	2.7
	C	37	3.7	–	3.6	3.2
	C	42	4.2	–	4.1	3.7
	C	47	4.7	–	4.6	4.2
	C	52	5.2	–	5.1	4.7
	C	57	5.7	–	5.6	5.2
	C	62	6.2	–	6.1	5.7
	C	67	6.7	6.2	6.6	6.2
	C	72	7.2	6.2	7.1	6.7
	C	75	7.5	6.2	7.4	7.2
	C	80	8.0	6.2	7.9	7.5

L type
(non EMC)



	Reference		Collet ø		Cable ø	
	Type	Code	ø A	ø B	max.	min.
2C	L	14	1.4	–	1.3	0.8
	L	27	2.7	–	2.6	2.2
	L	32	3.2	–	3.1	2.7
	L	37	3.7	–	3.6	3.2
	L	42	4.2	–	4.1	3.7
	L	47	4.7	–	4.6	4.2
	L	52	5.2	–	5.1	4.7
	L	57	5.7	–	5.6	5.2
	L	62	6.2	–	6.1	5.7
	L	67	6.7	–	6.6	6.2
	L	72	7.2	–	7.1	6.7
	L	77	7.5	–	7.6	7.2
	L	82	8.2	–	8.1	7.7

Note: all dimensions are in millimetres.

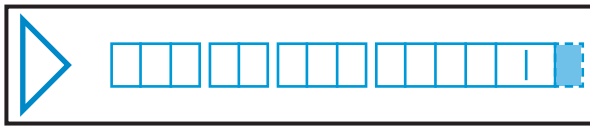

Variant (2C series)

Bend relief for 2C series models with collet

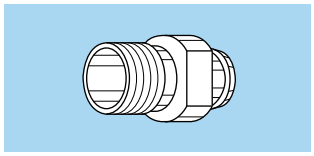

Need to be ordered

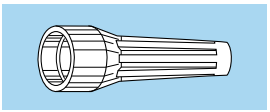

	Ref.	Collet		Need to be ordered separately (see pages 167 and 168)
		Type	Code	
2C	Z	C	42 to 80	GMA.2B.0●●.D●
		L	42 to 82	GMA.2B.0●●.D●

Watertight and vacumtight socket models (2C series)

	Ref.	Model (HEP or HGP)	
		Watertight	Vacuumtight
2C	P	●	–
	PV	–	●

Accessories (2C series)

Accessories for the 2C series are identical with the 2G series. Please refer to corresponding pages (page 139).

Tooling (2C series)

Please consult the «Tooling» section (page 173).

Panel cut-outs (2C series)

Panel cut-outs

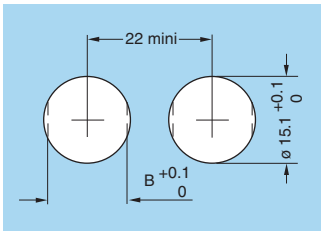

Model	B (mm)	Model	B (mm)
ECP	13.6	HEP	13.9
EEP	13.6	HGP	13.9
ERA	13.9	PSA	13.9
FAA	13.9		

ERY

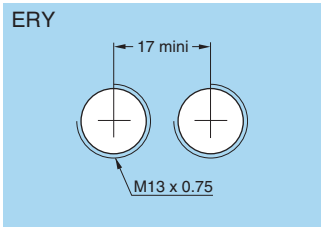

Note:
mounting nut torque:
6 Nm (1N = 0.102 kg)

PCB drilling patterns

308

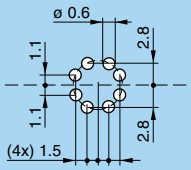

310

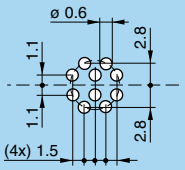

312

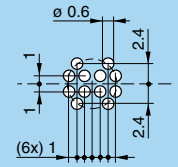

314

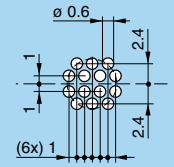

Cable assembly (2C series)

Cable stripping lengths

	Type	ø contact A (mm)	Cable stripping lengths (mm)		
			L	S	T
2C	302	1.6	11	8	3
	303/304/306	1.3	11	8	3
	308/310/312/314	0.7	11	8	3

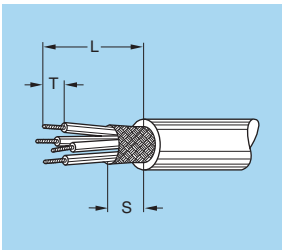

Note: the tolerances on these dimensions are: L: ± 0.5 mm; S: ± 0.5 mm; T: ± 0.2 mm.

M Series

The M Series connector offers a new innovative design for avionics, aerospace, military, security, motorsport and heavy duty applications.
Made of high-strength aluminium, this connector is one of the lightest and most compact of the LEMO product line.
A one-grip ratchet screw system enables quick and secure coupling of the connectors. The arctic grip makes it easy to manipulate the connector while wearing gloves or when the connector is located in a difficult to access area.

Features
– Ratchet-coupling mechanism
– Compact design for space savings
– Oil and fuel resistant
– 360° screening for full EMC shielding
– Colour coding / keying
– Scoop proof
– Threaded for MIL-DTL-38999L backshell
– Quick mating: less than 3/4 turn to seat
– Lightweight
– High vibration and shock resistance
– Sealed to IP68 when mated
– Reverse gender configuration
– Pin configuration from 2 to 114 contacts

Metal housing models

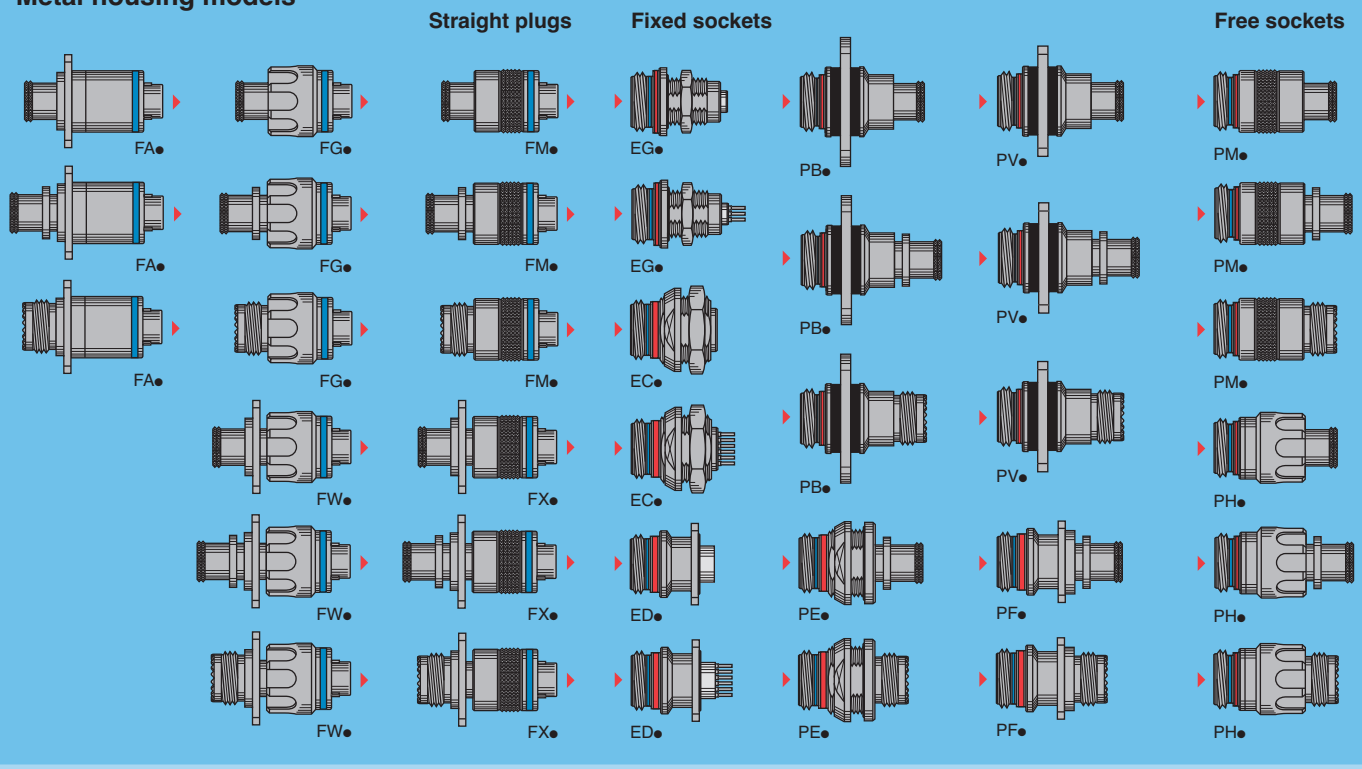

USB models

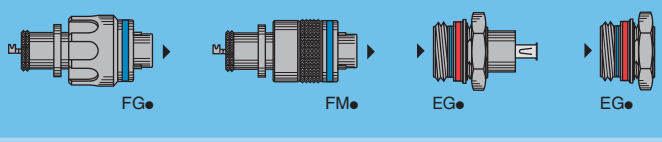

Watertight model (unmated)

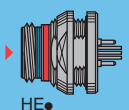

Fibre optic models

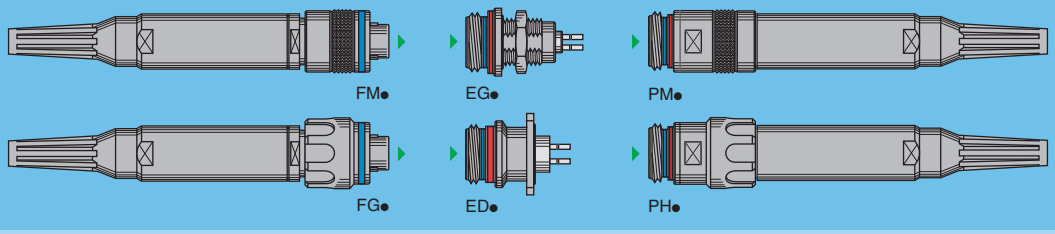

More informations on: https://www.lemo.com/catalog/ROW/UK_English/M_series.pdf

F Series

The F series connectors have been specially developed to meet the most demanding requirements in terms of dimensions, weight and watertightness. Our manufacturing programme includes now 8 series. This series provides customers with many features and benefits including:
– push-pull self-latching system for safe connection
– sealed to IP67 for environmental protection when mated according to IEC 60529
– compact scoop-proof design and use of aluminium alloy
– high shock and vibration resistance
– multipole types with 2 to 68 contacts or multifibre optic or mixed FO + LV in 2F series
– crimp or print contacts (straight or elbow)
– keys ensuring ease of blind mating
– colour coded key options for system security.

The F series connectors are available in 3 different materials:
– for high shock and vibration resistance, LEMO recommends using Y code material (with beryllium copper latch sleeve).
– for environmental resistance and latching cycle endurance, LEMO recommends using the C code material (brass outershell).
– for lightweight and latching cycle endurance, LEMO recommends using X code material (aluminium shell).
– for lightweight and salt spray corrosion resistance, LEMO recommends using I code material (aluminium shell).

Each series includes several models of plugs and sockets available in contact configurations adapted to all round cables, including up to 68 conductors, and a maximum diameter of 34 mm. Since LEMO connectors are perfectly screened and designed to guarantee very low resistance to shell electrical continuity, they are particularly adapted to applications where electromagnetic compatibility (EMC) is important. A large number of accessories as well as tooling for cable assembly are available.

Metal housing models

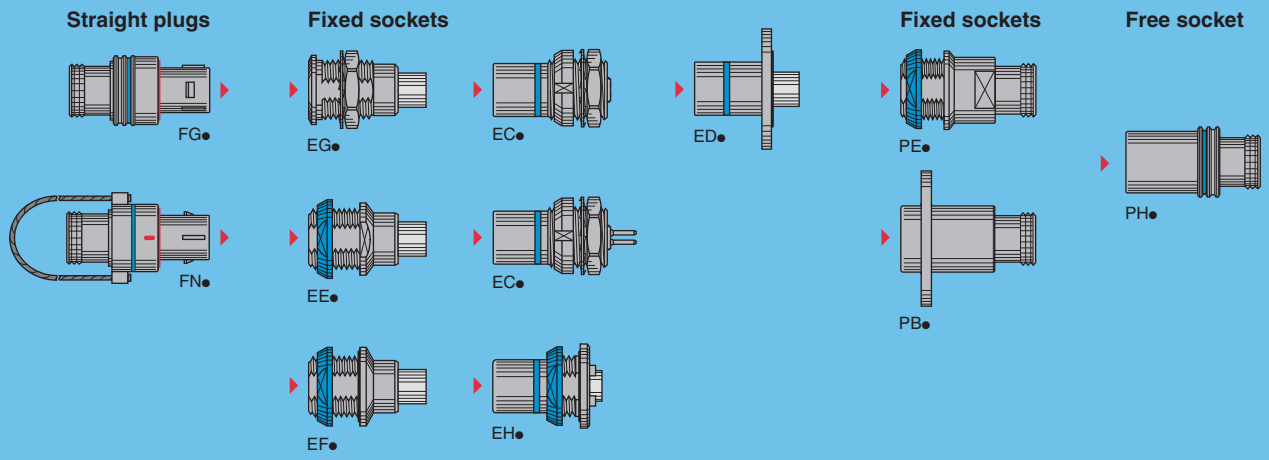

Models for fibre optic

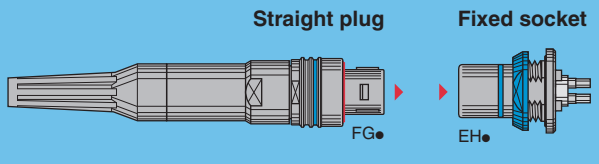

Watertight models

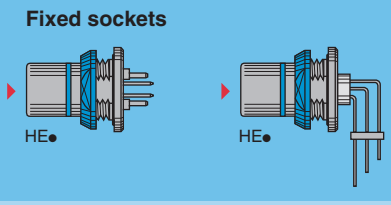

More informations on: https://www.lemo.com/catalog/ROW/UK_English/f_series.pdf

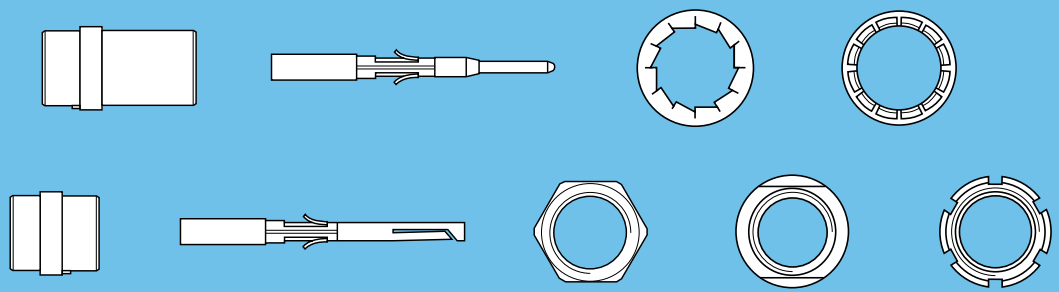

SPARE PARTS

Spare parts for crimp contacts

	Types	Insulator part number		ø (mm)		Fig.	Cond. AWG		Contact part number	
		Male contact	Female contact	A	C		min.	max.	Male	Female
00 TT	302/303/304	FGG.00.30●.YL	EGG.00.40●.YL	0.5	0.45	1	32	28	FGG.00.554.ZZC	EGG.00.654.ZZM
0B 0K 0T	302/303	FGG.0B.30●.YL	EGG.0B.40●.YL	0.9	1.10	1	24	20	FGG.0B.560.ZZC	EGG.0B.660.ZZM
					0.80	2	26	22	FGG.0B.561.ZZC	EGG.0B.661.ZZM
					0.45	2	32	28	FGG.0B.562.ZZC	EGG.0B.662.ZZM
	304/305	FGG.0B.30●.YL	EGG.0B.40●.YL	0.7	0.80	1	26	22	FGG.0B.555.ZZC	EGG.0B.655.ZZM
					0.45	2	32	28	FGG.0B.556.ZZC	EGG.0B.656.ZZM
	306/307/309	FGG.0B.30●.YL	–	0.5	0.45	1	32	28	FGG.0B.554.ZZC	–
0S	302	–	–	0.9	1.10	1	24	20	FGG.0B.560.ZZC	EGG.0B.660.ZZM
					0.80	2	26	22	FGG.0B.561.ZZC	EGG.0B.661.ZZM
					0.45	2	32	28	FGG.0B.562.ZZC	EGG.0B.662.ZZM
	304	–	–	0.7	0.80	1	26	22	FGG.0B.555.ZZC	EGG.0B.655.ZZM
					0.45	2	32	28	FGG.0B.556.ZZC	EGG.0B.656.ZZM
1B 1K 1T	302/303	FGG.1B.30●.YL	EGG.1B.40●.YL	1.3	1.40	1	20	18	FGG.1B.565.ZZC	EGG.1B.665.ZZM
					1.10	2	24	20	FGG.1B.566.ZZC	EGG.1B.666.ZZM
	304/305	FGG.1B.30●.YL	EGG.1B.40●.YL	0.9	1.10	1	24	20	FGG.1B.560.ZZC	EGG.1B.660.ZZM
					0.80	2	26	22	FGG.1B.561.ZZC	EGG.1B.661.ZZM
	306/307/308	FGG.1B.30●.YL	EGG.1B.40●.YL	0.7	0.80	1	26	22	FGG.1B.555.ZZC	EGG.1B.655.ZZM
					0.45	2	32	28	FGG.1B.556.ZZC	EGG.1B.656.ZZM
	310/314/316	FGG.1B.3●●.YL	–	0.5	0.45	1	32	28	FGG.1B.554.ZZC	–
1S	302	–	–	1.3	1.40	1	20	18	FGG.1B.565.ZZC	EGG.1B.665.ZZM
					1.10	2	24	20	FGG.1B.566.ZZC	EGG.1B.666.ZZM
	304	–	–	0.9	1.10	1	24	20	FGG.1B.560.ZZC	EGG.1B.660.ZZM
					0.80	2	26	22	FGG.1B.561.ZZC	EGG.1B.661.ZZM
2B 2K 2T	302	FGG.2B.302.YL	EGG.2B.402.YL	2.0	2.40	1	16	12	FGG.2B.575.ZZC	EGG.2B.675.ZZM
					1.90	2	18	14	FGG.2B.576.ZZC	EGG.2B.676.ZZM
	303	FGG.2B.303.YL	EGG.2B.403.YL	1.6	1.90	1	18	14	FGG.2B.570.ZZC	EGG.2B.670.ZZM
					1.40	2	22	18	FGG.2B.571.ZZC	EGG.2B.671.ZZM
	304/305 306/307	FGG.2B.30●.YL	EGG.2B.40●.YL	1.3	1.40	1	20	18	FGG.2B.565.ZZC	EGG.2B.665.ZZM
					1.10	2	24	20	FGG.2B.566.ZZC	EGG.2B.666.ZZM
					0.80	2	26	22	FGG.2B.567.ZZC	EGG.2B.667.ZZM
	308/310	FGG.2B.3●●.YL	EGG.2B.4●●.YL	0.9	1.10	1	24	20	FGG.2B.560.ZZC	EGG.2B.660.ZZM
					0.80	2	26	22	FGG.2B.561.ZZC	EGG.2B.661.ZZM
					0.45	2	32	28	FGG.2B.562.ZZC	EGG.2B.662.ZZM
	312/314/316 318/319	FGG.2B.3●●.YL	EGG.2B.4●●.YL	0.7	0.80	1	26	22	FGG.2B.555.ZZC	EGG.2B.655.ZZM
					0.45	2	32	28	FGG.2B.556.ZZC	EGG.2B.656.ZZM

Tools for crimp contacts

	Types	Positioners part number [3]		Extractors part number for male/female contacts
		Male contact	Female contact	
00 TT	302/303/304	DCE.91.050.0VC	DCE.91.050.0VM	DCF.91.050.2LT
0B 0K 0T	302/303	DCE.91.090.BVC	DCE.91.090.BVM	DCF.91.090.2LT
		DCE.91.090.AVC	DCE.91.090.AVM	
	304/305	DCE.91.070.BVC	DCE.91.070.BVM	DCF.92.070.3LT
	306/307/309	DCE.91.050.BVC	DCE.91.050.BVM	DCF.91.050.2LT
0S	302	DCE.91.090.BVC	DCE.91.090.BVM	–
		DCE.91.090.AVC	DCE.91.090.AVM	
	304	DCE.91.070.BVC	DCE.91.070.BVM	–
1B 1K 1T	302/303	DCE.91.131.BVC	DCE.91.131.BVM	DCF.91.131.2LT
	304/305	DCE.91.091.BVC	DCE.91.091.BVM	DCF.91.090.2LT
	306/307/308	DCE.91.071.BVC	DCE.91.071.BVM	DCF.91.070.2LT
	310/314/316	DCE.91.051.BVC	DCE.91.051.BVM	DCF.91.050.2LT
1S	302	DCE.91.131.BVC	DCE.91.131.BVM	–
	304	DCE.91.091.BVC	DCE.91.091.BVM	–
2B 2K 2T	302	DCE.91.202.BVCM		DCC.91.202.5LA[1]
	303	DCE.91.162.BVCM		DCF.91.162.2LT
	304/305 306/307	DCE.91.132.BVC	DCE.91.132.BVM	DCF.91.131.2LT
		DCE.91.132.CVC	DCE.91.132.CVM	
	308/310	DCE.91.092.BVC	DCE.91.092.BVM	DCF.91.090.2LT
		DCE.91.092.AVC	DCE.91.092.AVM	
	312/314/316 318/319	DCE.91.072.BVC	DCE.91.072.BVM	DCF.91.070.2LT[2]

Note:
[1] this model is thumb-operated.
[2] for inverted contacts, please use DCF.92.070.3LT instead.
[3] please consult the «Tooling» section (page 178) for the corresponding crimping tools.

FGG-EGG Crimp contacts

Fig. 1

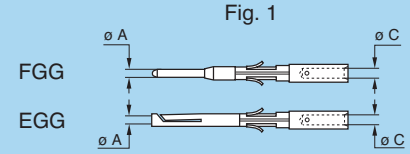

Fig. 2

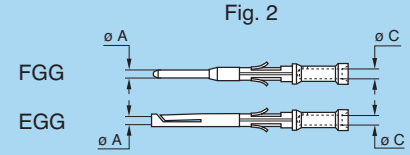

Note: a wide variation of strand number and diameter combinations are quoted as being AWG, some of which do not have a large enough cross section to guarantee a crimp as per either MIL-C-22520/1-01 or /7-01.

FGG-EGG Insulators

FGG



male

EGG



female

Note: each insulator can be used both for crimp contacts of normal shape (fig. 1) or with reduced solder cups (fig. 2).

DCE Positioners ø 0.5-0.7-0.9-1.3 mm [3]



male



female

These positioners are suitable for use with both manual and pneumatic crimping tools according to the MIL-C-22520/7-01 standard.

DCE Turret for ø 1.6-2.0-3.0-4.0 mm [3]



Note: these turrets can be used with manual crimping tool according to MIL-C-22520/1-01 standard.

DCF Automatic extraction tools

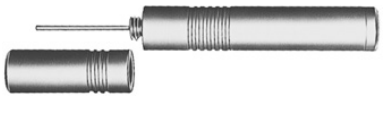

Note: (not valid for FA● and FW● models)

Spare parts for crimp contacts

	Types	Insulator part number		ø (mm)		Fig.	Cond. AWG		Contact part number	
		Male contact	Female contact	A	C		min.	max.	Male	Female
2S	306	–	–	1.3	1.40	1	20	18	FGG.2B.565.ZZC	EGG.2B.665.ZZM
					1.10	2	24	20	FGG.2B.566.ZZC	EGG.2B.666.ZZM
					0.80	2	26	22	FGG.2B.567.ZZC	EGG.2B.667.ZZM
3B 3K 3T	302	FGG.3B.302.YL	EGG.3B.402.YL	3.0	3.20	1	14	10	FGG.3B.580.ZZC	EGG.3B.680.ZZM
	303/304/309	FGG.3B.30●.YL[1]	EGG.3B.40●.YL[1]	2.0	2.40	1	16	12	FGG.3B.575.ZZC	EGG.3B.675.ZZM
					1.90	2	18	14	FGG.3B.576.ZZC	EGG.3B.676.ZZM
	305/306/307	FGG.3B.30●.YL	EGG.3B.40●.YL	1.6	1.90	1	18	14	FGG.3B.570.ZZC	EGG.3B.670.ZZM
					1.40	2	22	18	FGG.3B.571.ZZC	EGG.3B.671.ZZM
	308/309/310	FGG.3B.3●●.YL[1]	EGG.3B.4●●.YL[1]	1.3	1.40	1	20	18	FGG.3B.565.ZZC	EGG.3B.665.ZZM
					1.10	2	24	20	FGG.3B.566.ZZC	EGG.3B.666.ZZM
	312/314 316/318	FGG.3B.3●●.YL	EGG.3B.4●●.YL	0.9	1.10	1	24	20	FGG.3B.560.ZZC	EGG.3B.660.ZZM
					0.80	2	26	22	FGG.3B.561.ZZC	EGG.3B.661.ZZM
					0.45	2	32	28	FGG.3B.562.ZZC	EGG.3B.662.ZZM
	320/322/324 326/330	FGG.3B.3●●.YL	EGG.3B.4●●.YL	0.7	0.80	1	26	22	FGG.3B.555.ZZC	EGG.3B.655.ZZM
					0.45	2	32	28	FGG.3B.556.ZZC	EGG.3B.656.ZZM
4B 4K	304	FGG.4B.304.YL	EGG.4B.404.YL	3.0	3.20	1	14	10	FGG.4B.580.ZZC	EGG.4B.680.ZZM
	306/307	FGG.4B.30●.YL	EGG.4B.40●.YL	2.0	2.40	1	16	12	FGG.4B.575.ZZC	EGG.4B.675.ZZM
					1.90	2	18	14	FGG.4B.576.ZZC	EGG.4B.676.ZZM
	310	FGG.4B.310.YL	EGG.4B.410.YL	1.6	1.90	1	18	14	FGG.4B.570.ZZC	EGG.4B.670.ZZM
					1.40	2	22	18	FGG.4B.571.ZZC	EGG.4B.671.ZZM
	312	FGG.4B.312.YL	EGG.4B.412.YL	1.3	1.40	1	20	18	FGG.4B.565.ZZC	EGG.4B.665.ZZM
					1.10	2	24	20	FGG.4B.566.ZZC	EGG.4B.666.ZZM
	316/320 324/330	FGG.4B.3●●.YL	EGG.4B.4●●.YL	0.9	1.10	1	24	20	FGG.4B.560.ZZC	EGG.4B.660.ZZM
					0.80	2	26	22	FGG.4B.561.ZZC	EGG.4B.661.ZZM
	340/348	FGG.4B.3●●.YL	EGG.4B.4●●.YL	0.7	0.80	1	26	22	FGG.4B.555.ZZC	EGG.4B.655.ZZM
					0.45	2	32	28	FGG.4B.556.ZZC	EGG.4B.656.ZZM
5B 5K	304	FGG.5B.304.ML	EGG.5B.404.ML	4.0	4.00	1	12	10	FGG.5B.582.ZZC	EGG.5B.682.ZZM
	310	FGG.5B.310.YL	EGG.5B.410.YL	3.0	3.20	1	14	10	FGG.5B.580.ZZC	EGG.5B.680.ZZM
	314/316	FGG.5B.3●●.YL	EGG.5B.4●●.YL	2.0	2.40	1	16	12	FGG.5B.575.ZZC	EGG.5B.675.ZZM
					1.90	2	18	14	FGG.5B.576.ZZC	EGG.5B.676.ZZM
	320	FGG.5B.320.YL	EGG.5B.420.YL	1.6	1.90	1	18	14	FGG.5B.570.ZZC	EGG.5B.670.ZZM
					1.40	2	22	18	FGG.5B.571.ZZC	EGG.5B.671.ZZM
	330/340/348	FGG.5B.3●●.YL	EGG.5B.4●●.YL	1.3	1.40	1	20	18	FGG.5B.565.ZZC	EGG.5B.665.ZZM
					1.10	2	24	20	FGG.5B.566.ZZC	EGG.5B.666.ZZM
					0.80	2	26	22	FGG.5B.567.ZZC	EGG.5B.667.ZZM
	350/354/364	FGG.5B.3●●.YL[2]	EGG.5B.4●●.YL[2]	0.9	1.10	1	24	20	FGG.5B.560.ZZC	EGG.5B.660.ZZM
					0.80	2	26	22	FGG.5B.561.ZZC	EGG.5B.661.ZZM

Note:
[1] for 309 type the insulator part number is FGG.3B.309.ML (male contact) and EGG.3B.409.ML (female contact).
[2] for 350 type the insulator part number is FGG.5B.350.ML (male contact) and EGG.5B.409.ML (female contact).

Tools for crimp contacts

	Types	Positioners part number [2]		Extractors part number for male/ female contacts
		Male contact	Female contact	
2S	306	DCE.91.132.BVC	DCE.91.132.BVM	–
		DCE.91.132.CVC	DCE.91.132.CVM	
3B 3K 3T	302	DCE.91.303.BVCM		DCF.91.303.5LT
	303/304/309	DCE.91.203.BVCM		DCC.91.202.5LA[1]
	305/306/307	DCE.91.163.BVCM		DCF.91.163.5LT
	308/309/310	DCE.91.133.BVC	DCE.91.133.BVM	DCF.91.133.5LT
	312/314 316/318	DCE.91.093.BVC	DCE.91.093.BVM	DCF.91.093.5LT
		DCE.91.093.BVG	DCE.91.093.BVU	
	320/322/324 326/330	DCE.91.073.BVC	DCE.91.073.BVM	DCF.91.073.5LT
4B 4K	304	DCE.91.304.BVCM		DCF.91.303.5LT
	306/307	DCE.91.204.BVCM		DCC.91.202.5LA[1]
	310	DCE.91.164.BVCM		DCF.91.163.5LT
	312	DCE.91.134.BVC	DCE.91.134.BVM	DCF.91.133.5LT
	316/320 324/330	DCE.91.094.BVC	DCE.91.094.BVM	DCF.91.093.5LT
	340/348	DCE.91.074.BVC	DCE.91.074.BVM	DCF.91.073.5LT
5B 5K	304	DCE.91.405.BVCM		DCF.91.405.5LT
	310	DCE.91.305.BVCM		DCF.91.303.5LT
	314/316	DCE.91.205.BVCM		DCC.91.202.5LA[1]
	320	DCE.91.165.BVCM		DCF.91.163.5LT
	330/340/348	DCE.91.135.BVC	DCE.91.135.BVM	DCF.91.133.5LT
		DCE.91.135.BVG	DCE.91.135.BVU	
	350/354/364	DCE.91.095.BVC	DCE.91.095.BVM	DCF.91.093.5LT

Note:
[1] this model is thumb-operated.
[2] please consult the «Tooling» section (page 178) for the corresponding crimping tools.

FGG-EGG Crimp contacts

Fig. 1

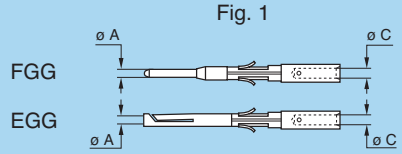

Fig. 2

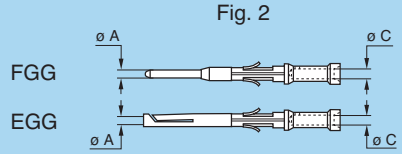

Note: a wide variation of strand number and diameter combinations are quoted as being AWG, some of which do not have a large enough cross section to guarantee a crimp as per either MIL-C-22520/1-01 or /7-01.

FGG-EGG Insulators

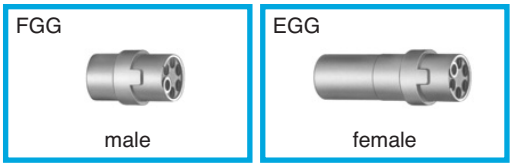

Note: each insulator can be used both for crimp contacts of normal shape (fig. 1) or with reduced solder cups (fig. 2).

DCE Positioners ø 0.5-0.7-0.9-1.3 mm [2]

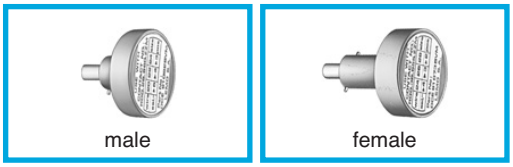

These positioners are suitable for use with both manual and pneumatic crimping tools according to the MIL-C-22520/7-01 standard.

DCE Turret for ø 1.6-2.0-3.0-4.0 mm [2]



Note: these turrets can be used with manual crimping tool according to MIL-C-22520/1-01 standard.

DCF Automatic extraction tools

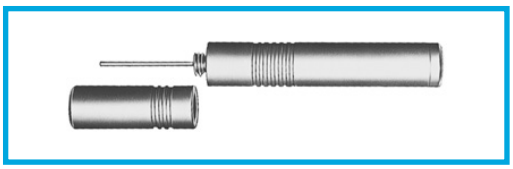

Note: (not valid for FA● and FW● models)

GBA Locking washers



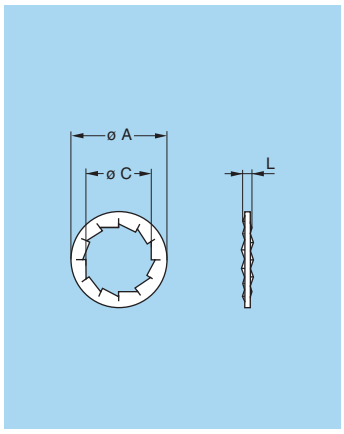

Part number	Series	Dimensions (mm)		
		A	C	L
GBA.00.250.FN	00-TT	9.5	7.1	1.0
GBA.0S.250.FN	0S-0B-0T	12.5	9.1	1.0
GBA.1S.250.FN	1S-1B-1T	16.0	12.1	1.0
GBA.0E.250.FN	XB	19.6	14.1	1.2
GBA.1E.250.FN	1E-1K	21.8	16.1	1.2
GBA.2S.250.FN	2S-2B-2C-2G-2T	19.5	15.1	1.2
GBA.3S.250.FN	3S-3B-3T	25.0	18.1	1.4
GBA.4S.250.FN	4S-4B	32.0	25.1	1.4

- Material: Nickel-plated bronze (3 µm)

Note: to order this accessory separately, use the above part numbers.

GBB Tapered washers



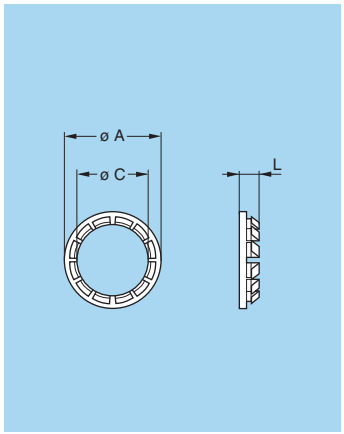

Part number	Series	Dimensions (mm)		
		A	C	L
GBB.00.250.LN	00	9	7.1	2.0
GBB.0S.250.LN	0S-0B	11	9.1	2.5
GBB.1S.250.LN	1S-1B	15	12.1	3.5
GBB.2S.250.LN	2S-2B-2C-2G	18	15.1	4.0
GBB.3S.250.LN	3S-3B	22	18.1	4.5
GBB.4S.250.LN	4S-4B	28	25.2	5.0
GBB.5S.250.LN	5S-5B	40	35.2	7.5

- Material: Nickel-plated brass (3 µm)

Note: sockets of series 5B and 5S are always supplied with a tapered washer. To order this accessory separately, use the above part numbers. The panel cut out diameters are larger when using tapered washer.

GEG Notched nut



Model 1

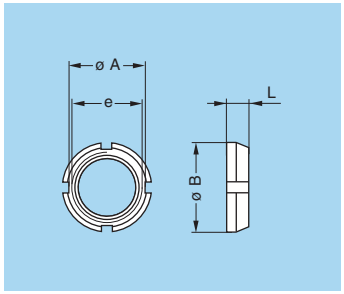



Model 2

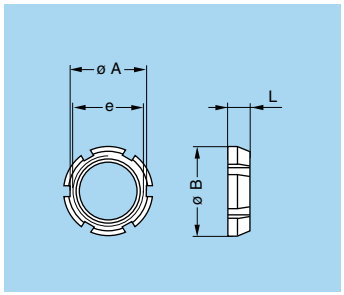

Part number	Model	Dimensions (mm)			
		A	B	e	L
GEG.00.240.LC	1	8.6	10	M7 x 0.5	2.5
GEG.0S.240.LC	1	10.5	12	M9 x 0.6	2.5
GEG.0E.240.LC	1	15.8	18	M14 x 1.0	3.5
GEG.1S.240.LC	1	14.0	16	M12 x 1.0	3.5
GEG.1E.240.LC	2	17.5	20	M16 x 1.0	3.5
GEG.1S.242.LC	1	12.1	14	M11 x 0.5	3.5
GEG.2S.240.LC	2	17.5	20	M15 x 1.0	3.5
GEG.2S.241.LC	2	20.5	24	M19 x 1.0	3.5
GEG.2E.240.LC	2	22.5	25	M20 x 1.0	3.5

- Material: Chrome-plated brass (Ni 3 µm + Cr 0.3 µm)

Note: 00, TT, 0B, 0T, 0S, 1B, 1T, 1S, 2B, 2T and 2S series fixed and free sockets for back panel mounting are always delivered with this notched nut. To order this accessory separately, use the above part numbers.

GEA Hexagonal nuts



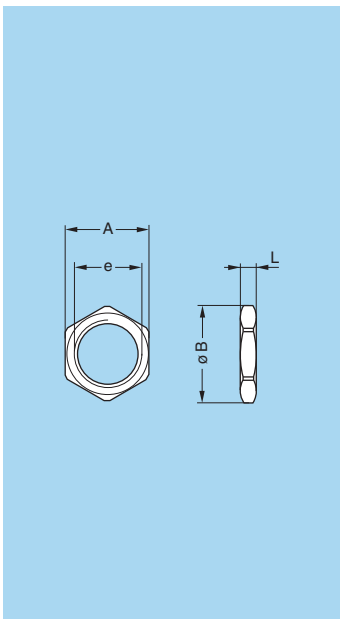

Part number	Series	Dimensions (mm)			
		A	B	e	L
GEA.00.240.LN	00-TT	9	10.2	M7 x 0.50	2.0
GEA.0S.240.LN	0S-0B-0T	11	12.4	M9 x 0.60	2.0
GEA.0S.241.LN	0S-0B	12	13.8	M10 x 0.75	2.5
GEA.0E.240.LN	0E-0K-0L 1S-1B-XB	17	19.2	M14 x 1.00	2.5
GEA.1S.240.LN	1S-1B-1T	14	15.8	M12 x 1.00	2.5
GEA.1E.240.LN	1E-1K-1L 2S-2B	19	21.5	M16 x 1.00	3.0
GEA.2S.240.LN	2S-2B-2T	17	19.2	M15 x 1.00	2.7
GEA.2E.240.LN	2E-2K-2L	24	27.0	M20 x 1.00	4.0
GEA.3S.240.LN	3S-3B-3T	22	25.0	M18 x 1.00	3.0
GEA.3E.240.LN	3E-3K	30	34.0	M24 x 1.00	5.0
GEA.4S.240.LN	4S-4B	30	34.0	M25 x 1.00	5.0
GEA.4E.240.LN	4E-4K	36	40.5	M30 x 1.00	7.0

- Material: Nickel-plated brass (3 μm), natural anodized aluminium alloy, stainless steel

Note: to order this part separately, use the above part numbers. The last letters «LN» of the part number refer to the nut material and treatment. If a nut in aluminium alloy or stainless steel is desired, replace the last letters of the part number by «PT» or «AZ» respectively.

GEC Conical nuts

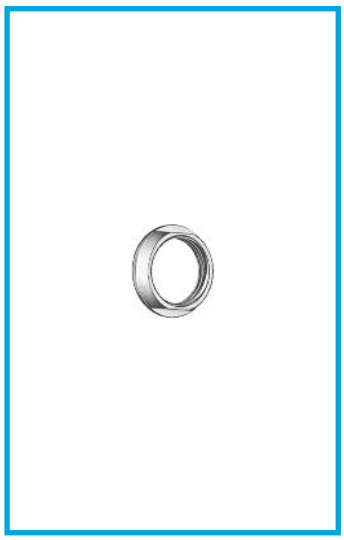

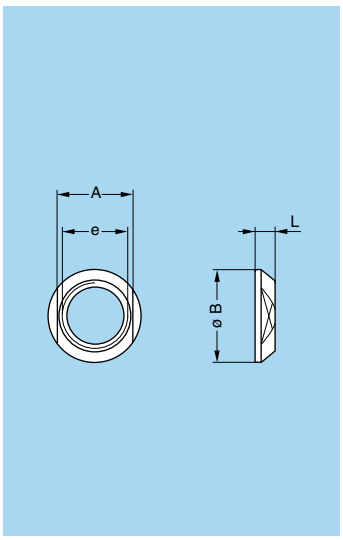

Part number	Dimensions (mm)			
	A	B	e	L
GEC.00.240.LC	8	10.0	M7 x 0.5	2.5
GEC.0S.240.LC	10	12.0	M9 x 0.6	2.5
GEC.0E.240.LC	16	18.0	M14 x 1.0	3.0
GEC.1S.240.LC	13	16.0	M12 x 1.0	3.2
GEC.1S.241.LC	17	20.0	M16 x 1.0	4.0
GEC.1S.242.LC	12	14.0	M11 x 0.5	3.2
GEC.2S.240.LC	17	20.0	M15 x 1.0	3.8
GEC.2S.241.LC	20	24.0	M19 x 1.0	5.8
GEC.2E.240.LC	22	25.0	M20 x 1.0	5.0
GEC.3S.240.LC	20	24.0	M18 x 1.0	4.5
GEC.3E.240.LC	27	30.0	M24 x 1.0	4.5
GEC.4S.240.LC	27	30.0	M25 x 1.0	4.5
GEC.4K.241.LC	32	35.5	M30 x 1.0	5.0
GEC.5S.240.LC	37	41.0	M35 x 1.0	5.0

- Material: Chrome-plated brass (Ni 3 μm + Cr 0.3 μm)

Note: 3B, 3K, 3T, 3S, 3E, 4B, 4K, 4S, 4E, 5B, 5K, 5S, 5E, 6S and 6E series fixed and free sockets for back panel mounting are always delivered with a conical nut. To order this accessory separately, use the part numbers in the adjacent table.

GEB Round nuts

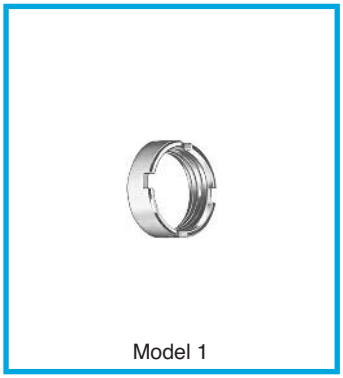

Model 1

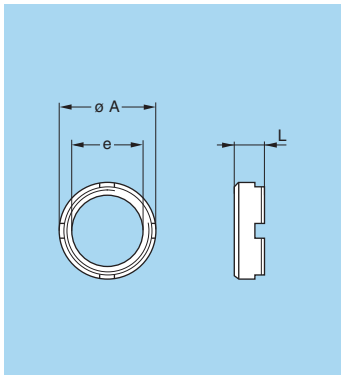

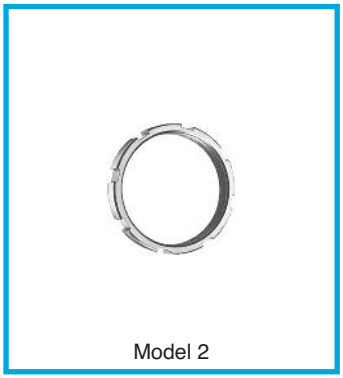

Model 2

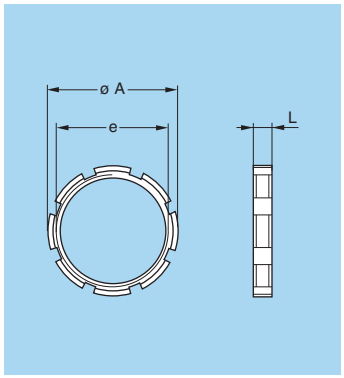

Part number	Model	Dimensions (mm)		
		A	e	L
GEB.00.240.LN	1	9.0	M7 x 0.50	4.0
GEB.0S.240.LN	1	11.0	M9 x 0.60	4.0
GEB.0E.240.LN	1	18.0	M14 x 1.00	5.0
GEB.1S.240.LN	1	14.0	M12 x 1.00	5.0
GEB.1E.240.LN	1	20.0	M16 x 1.00	5.0
GEB.2S.240.LN	1	18.0	M15 x 1.00	5.5
GEB.2B.240.LN	1	17.5	M15 x 0.75	2.5
GEB.3S.240.LN	1	22.0	M18 x 1.00	5.5
GEB.4S.240.LN	1	28.0	M25 x 1.00	6.0
GEB.5S.240.LN	2	40.0	M35 x 1.00	8.0
GEB.5E.240.LN	2	54.0	M45 x 1.50	8.0
GEB.6S.241.LN	2	54.0	M48 x 1.50	8.0
GEB.6E.240.LN	2	65.0	M55 x 2.00	9.0

- Material: Nickel-plated brass (3 μm)

Note: 5B, 5K, 5S, 5E, 6S and 6E series sockets are always supplied with model 2 round nuts. To order this accessory separately, use the part numbers in the adjacent table.

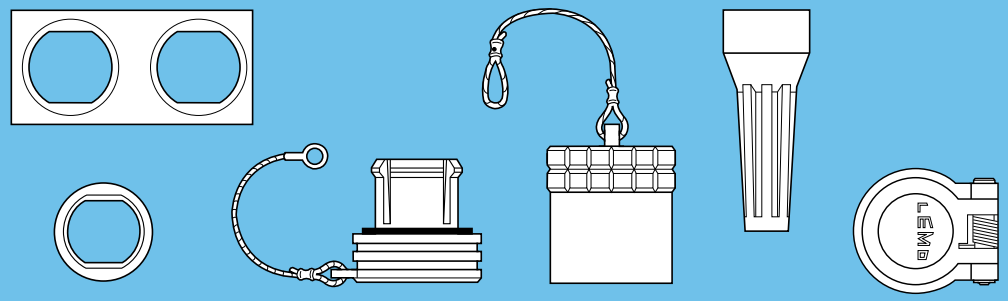

ACCESSORIES

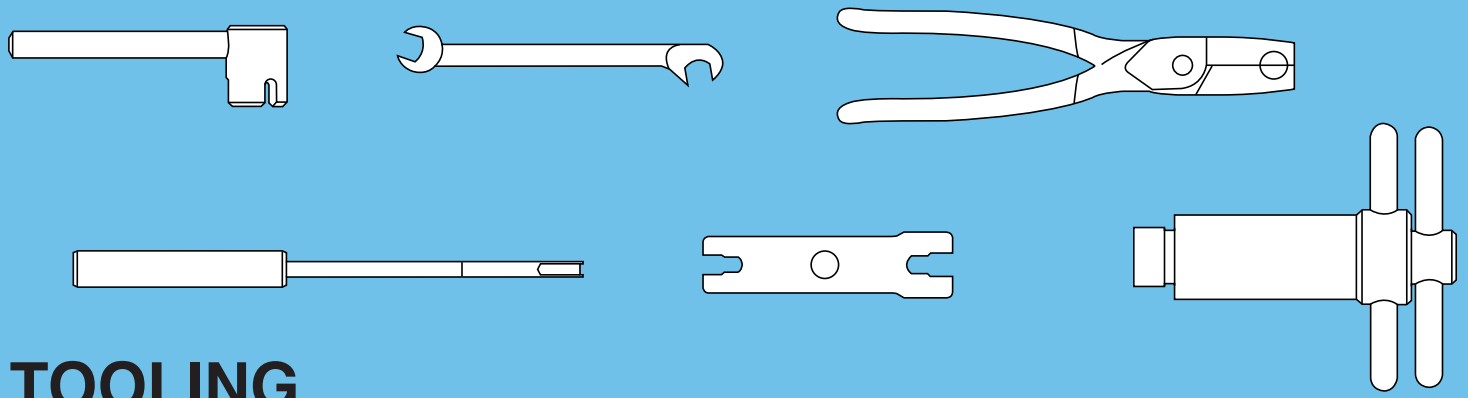

TOOLING

Accessories

BFG Plug caps



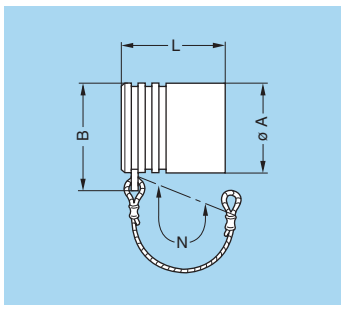

- Body material: Polyoxymethylene (POM) grey (or black)
- Cord material: Polyamide 6, grey (or black)
- Gasket material: Silicone rubber
- Maximum operating temperature: 100°C
- Watertightness: IP51 according to IEC 60529

Part number	Series	Dimensions (mm)			
		A	B	L	N
BFG.00.100.PCSG	00	7.5	9.8	10.0	60
BFG.0B.100.PCSG	0S-0B	9.5	12.0	12.2	85
BFG.1B.100.PCSG	1S-1B	12.0	15.0	13.8	85
BFG.2B.100.PCSG	2S-2B	15.0	18.0	15.0	85
BFG.3B.100.PCSG	3S-3B	18.5	22.0	18.5	95

Note: this cap is available only with an alignment key (G). Upon request this cap can be supplied in black and the last letter «G» of the part number should be replaced with «N».

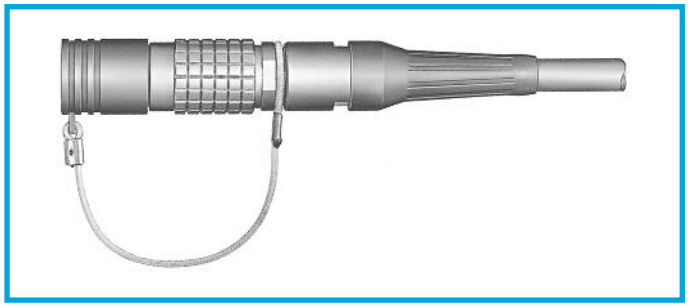

Fitting the cord

Slide the plug into the loop of the cord.
Place the loop into the groove in front of the collet nut and tighten the loop.

BFA Plug caps



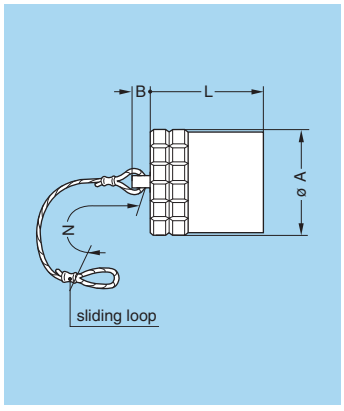

- Body material: Nickel-plated brass (Ni 3µm)
- Lanyard material: Stainless steel
- Crimp ferrule material: Nickel-plated brass + polyolefin
- O-ring material: Silicone rubber or FPM
- Maximum operating temperature: 135°C
- Watertightness: IP68 according to IEC 60529 for E series

Part number	Series	Dimensions (mm)			
		A	B	L	N
BFA.0E.100.NAS	0E	14.0	6	12.5	85
BFA.1E.100.NAS	1E	16.0	6	15.5	85
BFA.2E.100.NAS	2E	19.5	6	17.5	85
BFA.3E.100.NAS	3E	23.0	6	22.0	120
BFA.4E.100.NAS	4E	29.0	10	22.5	120
BFA.4S.100.NAS	4S	25.0	10	22.2	120
BFA.5E.100.NAS	5E	44.0	10	27.0	150
BFA.5S.100.NAS	5S	36.0	10	30.2	150
BFA.6S.100.NAS	6S	46.0	10	33.0	150

Note: the last letter «S» of the part number stands for the material of the O-ring (silicone rubber). O-ring's made from FPM are also available; if required, replace the letter «S» by «V».

BFG Plug caps with key (G)



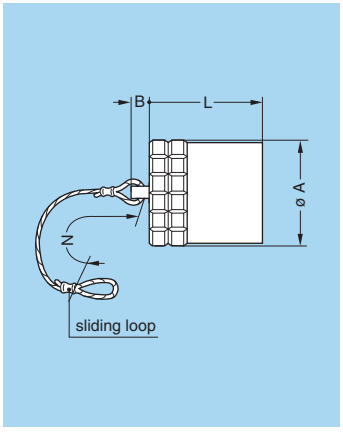

- Body material: Nickel-plated brass (Ni 3µm)
- Lanyard material: Stainless steel
- Crimp ferrule material: Nickel-plated brass + polyolefin
- O-ring material: Silicone rubber or FPM
- Maximum operating temperature: 135°C
- Watertightness: IP68 according to IEC 60529 for E and K series

Part number	Series	Dimensions (mm)			
		A	B	L	N
BFG.0K.100.NAS	0K-0L	14.0	6	12.5	85
BFG.1K.100.NAS	1K-1L	16.0	6	15.5	85
BFG.2K.100.NAS	2K-2L	19.5	6	17.5	85
BFG.3K.100.NAS	3K	23.0	6	22.0	120
BFG.4B.100.NAS	4B	25.0	10	20.2	120
BFG.4K.100.NAS	4K	29.0	10	22.5	120
BFG.5B.100.NAS	5B	36.0	10	27.2	150
BFG.5K.100.NAS	5K	44.0	10	27.0	150
BFG.6E.100.NAS	6E	54.0	10	31.0	150

Note: this cap is available only with an alignment key (G). The last letter «S» of the part number stands for the material of the O-ring (silicone rubber). O-ring's made from FPM are also available; if required, replace the letter «S» by «V».

BHG Plug caps, nut fixing or flange



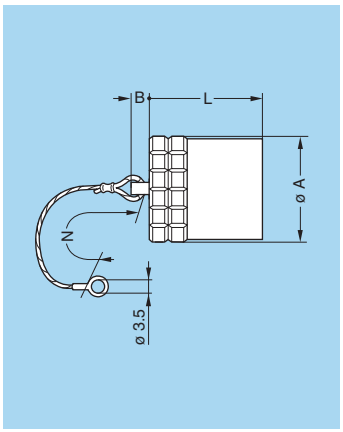

- Body material: Nickel-plated brass (Ni 3µm)
- Lanyard material: Stainless steel
- Crimp ferrule material: Nickel-plated brass + polyolefin
- O-ring material: Silicone rubber or FPM
- Maximum operating temperature: 135°C
- Watertightness: IP68 according to IEC 60529 for E and K series

Part number	Series	Dimensions (mm)			
		A	B	L	N
BHG.0K.100.NAS	0K-0L	14.0	6	12.5	85
BHG.1K.100.NAS	1K-1L	16.0	6	15.5	85
BHG.2K.100.NAS	2K-2L	19.5	6	17.5	85
BHG.3K.100.NAS	3K	23.0	6	22.0	120
BHG.4B.100.NAS	4B	25.0	10	20.2	120
BHG.4K.100.NAS	4K	29.0	10	22.5	120
BHG.5B.100.NAS	5B	36.0	10	27.2	150
BHG.5K.100.NAS	5K	44.0	10	27.0	150
BHG.6E.100.NAS	6E	54.0	10	31.0	150

Note: this cap is available only with an alignment key (G). The last letter «S» of the part number stands for the material of the O-ring (silicone rubber). O-ring's made from FPM are also available; if required, replace the letter «S» by «V».

BFG Plug cap



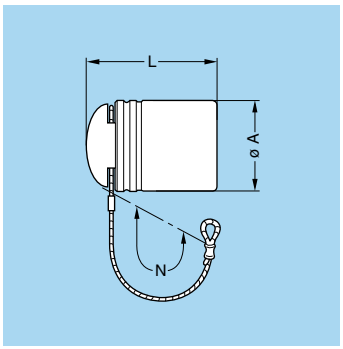

Part number	Series	Dimensions (mm)		
		A	L	N
BFG.3K.100.EAN	3K	26	31	155

- Material: black ALCRYN®
- Lanyard material: Stainless steel
- Crimp ferrule material: Stainless steel AISI 304 + polyolefin

Note: These caps are suitable for use with any alignment key configuration.

BHA Plug cap



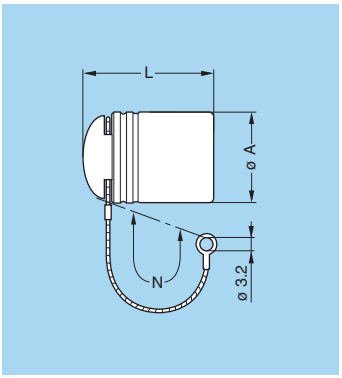

Part number	Series	Dimensions (mm)		
		A	L	N
BHA.3K.100.EAN	3K	26	31	120

- Material: black ALCRYN®
- Lanyard material: Stainless steel
- Crimp ferrule material: Stainless steel AISI 304 + polyolefin

Note: These caps are suitable for use with any alignment key configuration.

BRA Blanking caps for fixed sockets and free straight sockets

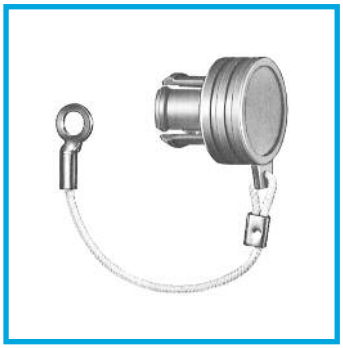

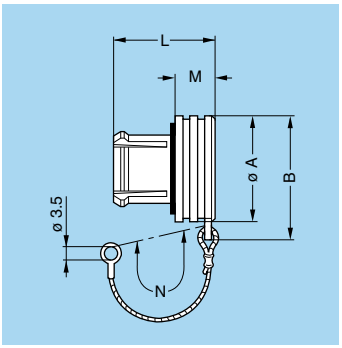

Part number	Series	Dimensions (mm)				
		A	B	L	M	N
BRA.00.200.PCSG	00	7.5	9.8	9.0	3.5	60
BRA.0B.200.PCSG	0S-0B	10.0	12.5	11.0	4.8	60
BRA.1B.200.PCSG	1S-1B	14.0	17.0	13.5	5.6	60
BRA.2B.200.PCSG	2S-2B-2C-2G	18.0	21.0	14.5	6.0	60
BRA.3B.200.PCSG	3S-3B	22.0	25.5	17.0	7.0	60

- Body material: Polyoxymethylene (POM) grey (or black)
- Cord material: Polyamide 6, grey (or black)
- Gasket material: Silicone rubber
- Maximum operating temperature: 100°C
- Watertightness: IP61 according to IEC 60529

Note: these caps are suitable for use with any alignment key configuration. On request this cap can be supplied in black. If so, replace the last letter «G» of the part number by «N».

BRE Blanking caps for fixed sockets



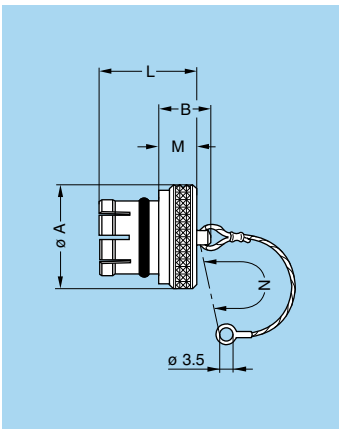

Part number	Series	Dimensions (mm)				
		A	B	L	M	N
BRE.00.200.NAS	00	8	7.5	8.8	3.5	60
BRE.0S.200.NAS	0S-0B	10	9.5	10.5	4.5	85
BRE.1S.200.NAS	1S-1B	14	11.0	12.5	5.0	85
BRE.2S.200.NAS	2S-2B	18	12.0	14.0	6.0	85
BRE.3S.200.NAS	3S-3B	22	14.0	18.0	8.0	120
BRE.4S.200.NAS	4S-4B	28	20.0	23.0	10.0	120
BRE.5S.200.NAS	5S-5B	40	22.0	30.0	12.0	150
BRE.6S.200.NAS	6S	54	22.0	30.0	12.0	150
BRE.6E.200.NAS	6E	57	24.0	31.5	14.0	150

- Body material: Nickel-plated brass (Ni 3 μm)
- Lanyard material: Stainless steel
- Crimp ferrule material: Nickel-plated brass + polyolefin
- O-ring material: Silicone rubber or FPM
- Maximum operating temperature: 135°C
- Watertightness: IP61 according to IEC 60529 for S series

Note: these caps are suitable for use with any alignment key configuration. The last letter «S» of the part number stands for the O-ring material (silicone rubber). O-ring's made from FPM are also available; if required, replace the letter «S» by «V».

BRE Blanking caps for fixed sockets



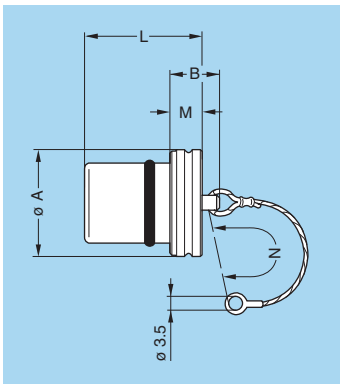

Part number	Series	Dimensions (mm)				
		A	B	L	M	N
BRE.0K.200.NAS	0K-0E-0L	15.0	10	15.0	4	85
BRE.1K.200.NAS	1K-1E-1L	17.0	12	20.0	6	85
BRE.2K.200.NAS	2K-2E-2L	20.5	14	24.0	8	85
BRE.3K.200.NAS	3K-3E	24.0	14	28.0	8	120
BRE.4K.200.NAS	4K-4E	30.0	20	30.5	10	120
BRE.5K.200.NAS	5K-5E	44.0	22	37.0	12	150

- Body material: Nickel-plated brass (Ni 3 µm)
- Lanyard material: Stainless steel
- Crimp ferrule material: Nickel-plated brass + polyolefin
- O-ring material: Silicone rubber or FPM
- Maximum operating temperature: 135°C
- Watertightness: IP68 according to IEC 60529

Note: these caps are suitable for use with any alignment key configuration. The last letter «S» of the part number stands for the O-ring material (silicone rubber). O-ring's made from FPM are also available; if required, replace the letter «S» by «V».

BRA Blanking caps for fixed sockets



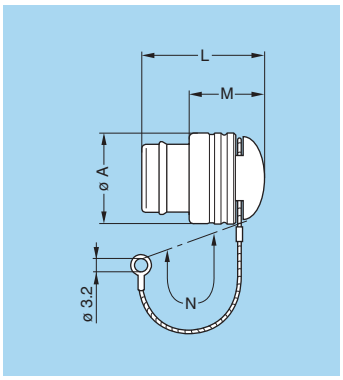

Part number	Series	Dimensions (mm)			
		A	L	M	N
BRA.3K.200.EAN	3K	26	27	14.5	120
BRA.4K.200.EAN	4K	31	31	17.0	120

- Material: black ALCRYN®
- Lanyard material: Stainless steel
- Crimp ferrule material: Stainless steel AISI 304 + polyolefin

Note: These caps are suitable for use with any alignment key configuration.

BRF Blanking caps for free sockets



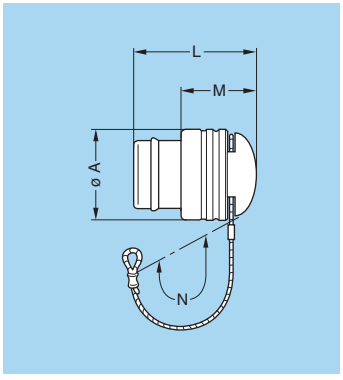

Part number	Series	Dimensions (mm)			
		A	L	M	N
BRF.3K.200.EAN	3K	26	27	14.5	155

- Material: black ALCRYN®
- Lanyard material: Stainless steel
- Crimp ferrule material: Stainless steel AISI 304 + polyolefin

Note: These caps are suitable for use with any alignment key configuration.

BRD Blanking caps for free sockets



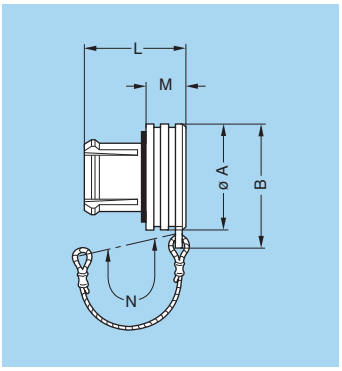

Part number	Series	Dimensions (mm)				
		A	B	L	M	N
BRD.00.200.PCSG	00	7.5	9.8	9.0	3.5	85
BRD.0B.200.PCSG	0S-0B	10.0	12.5	11.0	4.8	85
BRD.1B.200.PCSG	1S-1B	14.0	17.0	13.5	5.6	85
BRD.2B.200.PCSG	2S-2B	18.0	21.0	14.5	6.0	85
BRD.3B.200.PCSG	3S-3B	22.0	25.5	17.0	7.0	95

- Body material: Polyoxymethylene (POM) grey (or black)
- Cord material: Polyamide 6, grey (or black)
- Gasket material: Silicone rubber
- Maximum operating temperature: 100°C
- Watertightness: IP61 according to IEC 60529

Note: on request this cap is available in black. If required, replace the last letter «G» of the part number by «N».

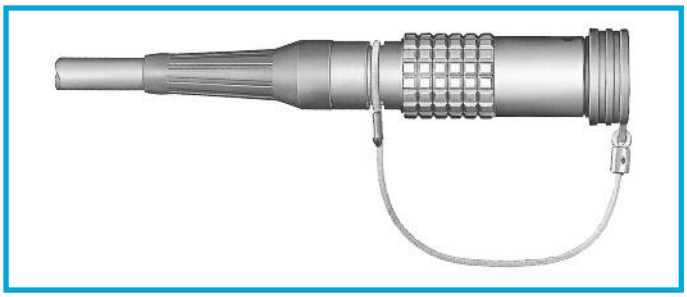

Fitting the cord

Slide the socket into the loop of the cord.
Place the loop into the groove in front of the collet nut.
Tighten the loop.

BRF Blanking caps for free sockets



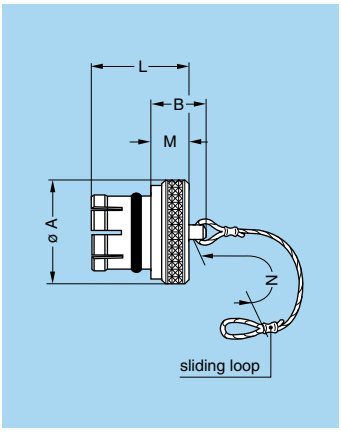

Part number	Series	Dimensions (mm)				
		A	B	L	M	N
BRF.00.200.NAS	00	8	7.5	8.8	3.5	85
BRF.0S.200.NAS	0S-0B	10	9.5	10.5	4.5	85
BRF.1S.200.NAS	1S-1B	14	11.0	12.5	5.0	85
BRF.2S.200.NAS	2S-2B	18	12.0	14.0	6.0	85
BRF.3S.200.NAS	3S-3B	22	14.0	18.0	8.0	120
BRF.4S.200.NAS	4S-4B	28	20.0	23.0	10.0	120
BRF.5S.200.NAS	5S-5B	40	22.0	30.0	12.0	150
BRF.6S.200.NAS	6S	54	22.0	30.0	12.0	150

- Body material: Nickel-plated brass (Ni 3 μm)
- Lanyard material: Stainless steel
- Crimp ferrule material: Nickel-plated brass + polyolefin
- O-ring material: Silicone rubber or FPM
- Maximum operating temperature: 135°C
- Watertightness: IP61 according to IEC 60529 for S series

Note: these caps are suitable for use with any alignment key configuration. The last letter «S» of the part number stands for the O-ring material (silicone rubber). O-ring's made from FPM are also available; if required, replace the letter «S» by «V».

BRF Blanking caps for free sockets



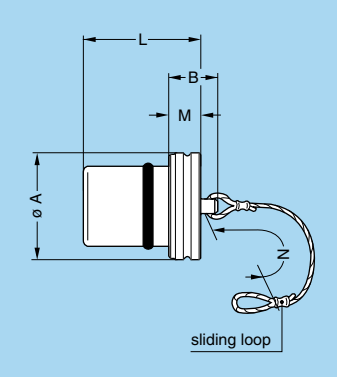

Part number	Series	Dimensions (mm)				
		A	B	L	M	N
BRF.0K.200.NAS	0K-0E-0L	15.0	10	15.0	4	85
BRF.1K.200.NAS	1K-1E-1L	17.0	12	20.0	6	85
BRF.2K.200.NAS	2K-2E-2L	20.5	14	24.0	8	85
BRF.3K.200.NAS	3K-3E	24.0	14	28.0	8	120
BRF.4K.200.NAS	4K-4E	30.0	20	30.5	10	120
BRF.5K.200.NAS	5K-5E	44.0	22	37.0	12	150

- Body material: Nickel-plated brass (Ni 3 µm)
- Lanyard material: Stainless steel
- Crimp ferrule material: Nickel-plated brass + polyolefin
- O-ring material: Silicone rubber or FPM
- Maximum operating temperature: 135°C
- Watertightness: IP68 according to IEC 60529

Note: these caps are suitable for use with any alignment key configuration. The last letter «S» of the part number stands for the O-ring material (silicone rubber). O-ring's made from FPM are also available; if required, replace the letter «S» by «V».

BRR Spring loaded dust caps for ERA, ERN and EG● sockets or PSA and PK● fixed sockets

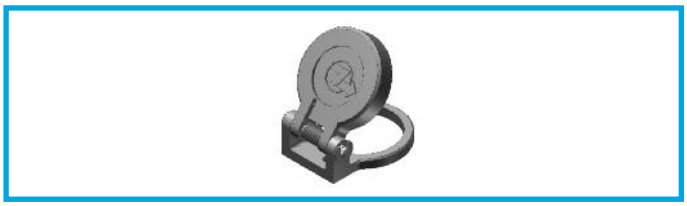

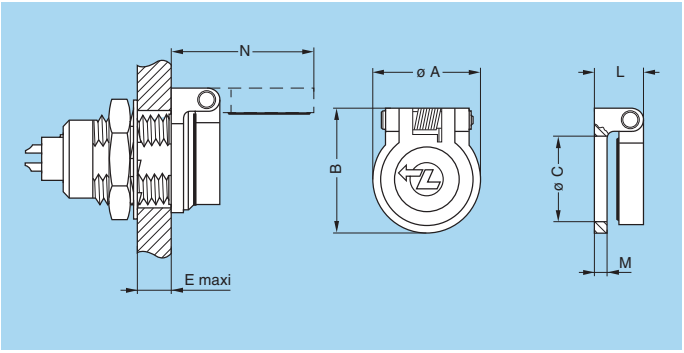

Part number	Series	Dimensions (mm)						
		A	B	C	E	L	M	N
BRR.0S.200.PZVG	0S-0B	11.0	13.3	9.0	5.8	5.0	1.2	15.3
BRR.1S.200.PZVG	1S-1B	14.2	17.1	12.0	6.0	6.3	1.5	20.3
BRR.2S.200.PZVG	2S-2B-2C-2G	18.6	22.4	15.2	6.5	8.2	2.0	26.2
BRR.3S.200.PZVG	3S-3B	22.5	26.5	18.2	9.0	8.8	2.5	30.8

Note: On request, this cap is available in black, blue or white. If so replace the last letter «G» of the part number by «N», «A» or «B».

- Body material: PSU
- Gasket material: FKM
- Spring material: Stainless steel
- Axes material: Nickel-plated brass
- Maximum operating temperature: 100°C
- Watertightness: IP61 according to IEC 60529

BRR Spring loaded dust cap for ED● and EB● fixed sockets



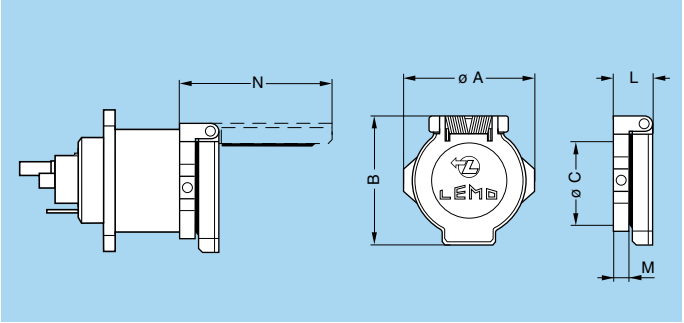

Part number	Series	Dimensions (mm)					
		A	B	C	L	M	N
BRR.3K.200.PZSG	3K	29	29	23	8.1	3	33.2

Note: Use Allen key (0.9 mm flat) to secure cap on connector.

- Cap material: Polyoxymethylene (POM) grey
- Body material: Nickel-plated brass
- Gasket material: Silicone rubber
- Spring material: Stainless steel
- Axes material: Nickel-plated brass
- Maximum operating temperature: 100°C
- Watertightness: IP61 according to IEC 60529

BFG Blanking caps for plugs (T series)

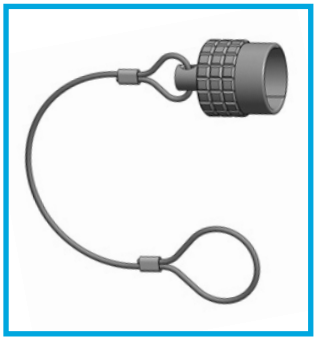

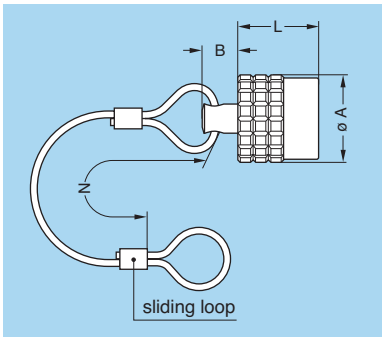

Part number	Dimensions (mm)				Part number
	A	B	L	N	
BFG.TT.100.CAS	7.0	4.0	9.0	60	**BHG.TT.100.CAS**
BFG.0T.100.CAS	9.5	5.0	11.0	85	**BHG.0T.100.CAS**
BFG.1T.100.CAS	12.0	6.0	12.4	85	**BHG.1T.100.CAS**
BFG.2T.100.CAS	15.0	6.0	13.8	85	**BHG.2T.100.CAS**
BFG.3T.100.CAS	18.8	6.0	17.6	120	**BHG.3T.100.CAS**

BHG Blanking caps for fixed plugs (T series)



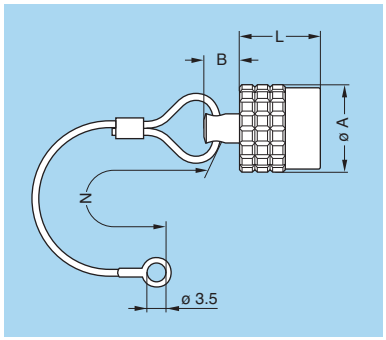

- Body material: Chrome-plated brass (Ni 3 µm)
- Lanyard material: Stainless steel
- Crimp ferrule material: Nickel-plated brass + polyolefin
- O-ring material: Silicone
- Maximum operating temperature: 135°C
- Watertightness: IP68 according to IEC 60529

BRF Blanking caps for free sockets (T series)



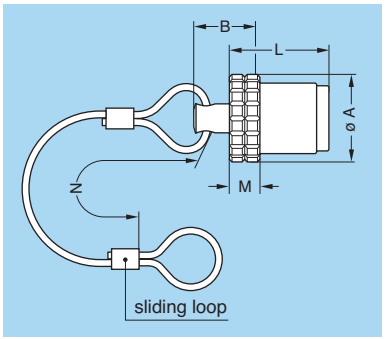

Part number	Dimensions (mm)					Part number
	A	B	L	M	N	
BRF.TT.200.CAZ	7.0	6.5	10.5	2.5	60	**BRE.TT.200.CAZ**
BRF.0T.200.CAZ	9.5	7.7	12.7	2.7	85	**BRE.0T.200.CAZ**
BRF.1T.200.CAZ	12.0	9.5	14.4	3.5	85	**BRE.1T.200.CAZ**
BRF.2T.200.CAZ	15.0	10.4	16.3	4.4	85	**BRE.2T.200.CAZ**
BRF.3T.200.CAZ	18.8	11.4	20.2	5.4	120	**BRE.3T.200.CAZ**

BRE Blanking caps for sockets (T series)



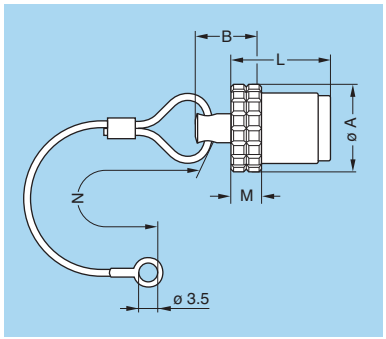

- Body material: Chrome-plated brass (Ni 3 µm)
- Lanyard material: Stainless steel
- Crimp ferrule material: Nickel-plated brass + polyolefin
- Maximum operating temperature: 135°C
- Watertightness: IP68 according to IEC 60529

GM● Bend relief (TPU)



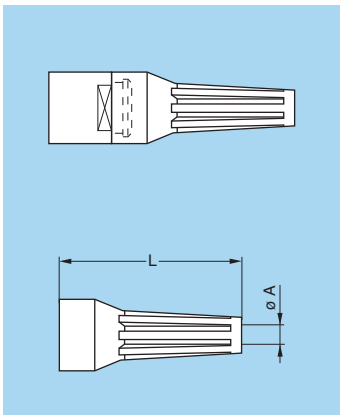

A bend relief made from thermoplastic polyurethane elastomer can be fitted over LEMO plugs and sockets that are supplied with nut for fitting such bend relief.
They are available in nine different colours match with the GRA insulating washers (see page 171).
Use the part numbers shown below to order this accessory separately.

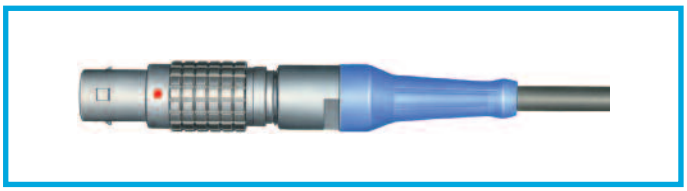

Main characteristics

- Material: TPU (Thermoplastic Polyurethane)
- Temperature range in dry atmosphere: -40°C +80°C

Part number	Series	Bend relief		Cable ø	
		A	L	min.	max.
GMA.00.012.DG [1]	00-TT	1.2	22	1.1	1.4
GMA.00.018.DG [1]		1.8	22	1.8	2.1
GMB.00.025.DG [1]		2.5	22	2.5	2.8
GMB.00.028.DG [1]		2.8	22	2.8	3.1
GMB.00.032.DG [1]		3.2	22	3.2	3.5
GMD.00.025.DG [1]		2.5	22	2.5	2.8
GMD.00.028.DG [1]		2.8	22	2.8	3.1
GMD.00.032.DG [1]		3.2	22	3.2	3.5
GMA.0B.025.DG	0B	2.5	24	2.5	2.9
GMA.0B.030.DG		3.0	24	3.0	3.4
GMA.0B.035.DG	0S	3.5	24	3.5	3.9
GMA.0B.040.DG [1]	0E-0K-0T 0L	4.0	24	4.0	4.4
GMA.0B.045.DG [1]		4.5	24	4.5	5.2
GMA.1B.025.DG	1B-XB	2.5	30	2.5	2.9
GMA.1B.030.DG		3.0	30	3.0	3.4
GMA.1B.035.DG	1S	3.5	30	3.5	3.9
GMA.1B.040.DG		4.0	30	4.0	4.4
GMA.1B.045.DG		4.5	30	4.5	4.9
GMA.1B.054.DG	1E-1K-1T 1L	5.4	30	5.4	6.0
GMA.1B.065.DG [1]		6.5	30	6.5	7.0

Part number	Series	Bend relief		Cable ø	
		A	L	min.	max.
GMA.2B.040.DG	2B	4.0	36	4.0	4.5
GMA.2B.045.DG		4.5	36	4.5	5.0
GMA.2B.050.DG	2S	5.0	36	5.0	5.5
GMA.2B.060.DG	2E-2K-2T 2L	6.0	36	6.0	6.5
GMA.2B.070.DG		7.0	36	7.0	7.7
GMA.2B.080.DG [1]	2C-2G	7.8	36	7.8	8.8
GMA.3B.050.DG [1]	3S	4.5	42	4.5	5.2
GMA.3B.060.DG	3B	6.0	42	6.0	6.9
GMA.3B.070.DG		7.0	42	7.0	7.9
GMA.3B.080.DG	3E-3K-3T	8.0	42	8.0	8.9
GMA.3B.090.DG	4S	9.0	42	9.0	10.0
GMA.4B.080.DG [1]	4S	8.0	60	8.0	9.0
GMA.4B.010.DG [1]		10.0	60	10.0	10.9
GMA.4B.011.DG [1]	4B	11.0	60	11.0	11.9
GMA.4B.012.DG [1]		12.0	60	12.0	13.0
GMA.4B.013.DG [1]	4E-4K	13.5	60	13.5	14.5

Note: all dimensions are in millimetres.

Note: [1] Design may differ from other bend relief, model without stripes. The «GMD» are thin bend reliefs (for very flexible cables).
The last letter «G» of the part number indicates the grey colour of the bend relief. For ordering a bend relief with another colour, see table on page 168 and replace the letter «G» by the letter of the required colour. See also detailed information for each series: B series on page 71; K series on page 71; T series on page 71; S series on page 130; E series on page 130.

GMA Bend relief (Silicone)



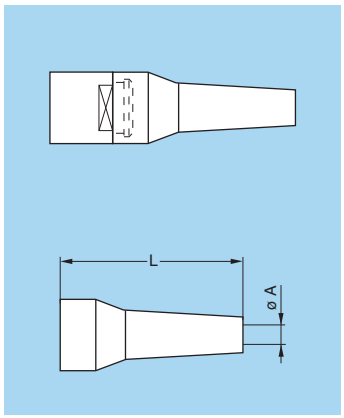

A bend relief has been designed for connectors used in applications at high temperature or requiring vapour sterilization.
These bend reliefs are different from previous ones as for their material, a silicone elastomer which is noted for its retention of flexibility over a wide temperature range. They are available in nine colours.
Use the part numbers shown below to order this accessory separately.

Main characteristics

- Material: Silicone elastomer VMQ
- Temperature range in dry atmosphere: -60°C +200°C
- Temperature range in water steam: +140°C

Part number	Series	Bend relief		Cable ø	
		A	L	min.	max.
GMA.0B.025.RG	0B	2.5	27	2.5	2.9
GMA.0B.030.RG		3.0	27	3.0	3.4
GMA.0B.035.RG	0S	3.5	27	3.5	3.9
GMA.0B.040.RG	0E-0K-0T 0L	4.0	27	4.0	4.4
GMA.0B.045.RG		4.5	27	4.5	5.2
GMA.1B.025.RG	1B	2.5	34	2.5	2.9
GMA.1B.030.RG		3.0	34	3.0	3.4
GMA.1B.035.RG	1S	3.5	34	3.5	3.9
GMA.1B.040.RG		4.0	34	4.0	4.4
GMA.1B.045.RG		4.5	34	4.5	5.0
GMA.1B.051.RG	1E-1K-1T 1L	5.1	34	5.1	5.6
GMA.1B.057.RG		5.7	34	5.7	6.2
GMA.1B.063.RG		6.3	34	6.3	7.0

Part number	Series	Bend relief		Cable ø	
		A	L	min.	max.
GMA.2B.040.RG	2B	4.0	41	4.0	4.4
GMA.2B.045.RG		4.5	41	4.5	5.0
GMA.2B.051.RG	2S	5.1	41	5.1	5.6
GMA.2B.057.RG		5.7	41	5.7	6.2
GMA.2B.063.RG	2E-2K-2T 2L	6.3	41	6.3	7.0
GMA.2B.071.RG		7.1	41	7.1	7.9
GMA.2B.080.RG	2C-2G	8.0	41	8.0	9.0

Note: The last letter «G» of the part number indicates the grey colour of the bend relief. For ordering a bend relief with another colour, see table on page 168 and replace the letter «G» by the letter of the required colour. See also detailed information for each series: B series on page 71; K series on page 71; T series on page 71; S series on page 130; E series on page 130.

Note: the selection of pigments, which should remain stable at high temperature, is limited by the new regulations. For this reason, some colours will be a shade different from those used for Desmopan bend reliefs. The selected solutions represent the best possible compromise.

Ref.	Colour
A	blue
B	white
G	grey

Ref.	Colour
J	yellow
M	brown
N	black

Ref.	Colour
R	red
S	orange
V	green

GM● Overall bend relief for plugs and sockets

Overall bend reliefs, type GMF for plugs and GMP for sockets offer optimum protection against mechanical damage and give a protection index of IP65 according to IEC 60529 (mated position). These bend reliefs slide easily over the connector shell and are positioned by slightly pressing the bend relief backnut.
The special design of the bend relief for plug provides for easy use of the push-pull self-latching system.

GMF Bend relief for straight plug



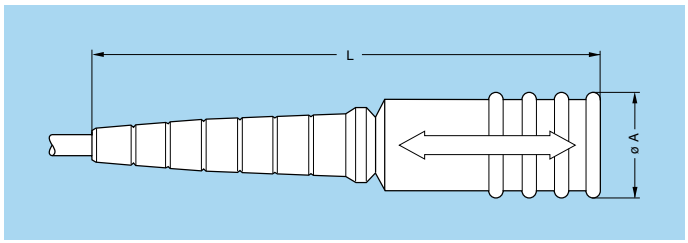

Part number	Series	Bend relief		Cable ø	
		A	L	min.	max.
GMF.0B.035.060EN	0S-0B	11.0	60.5	1.0	3.5
GMF.1B.062.072EN	1S-1B	16.0	72.0	2.5	6.2
GMF.2B.082.095EN	2S-2B	22.0	95.0	5.0	8.2

- Material: Elastomer rubber black colour
- Operating temperature: -30°C to +120°C

GMP Bend relief for free socket



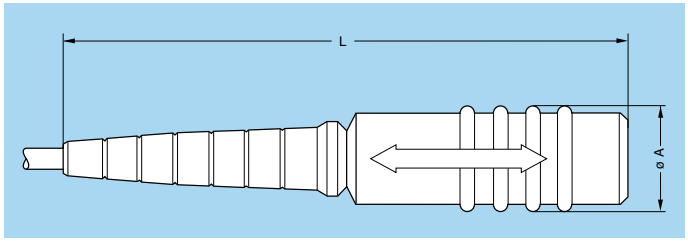

Part number	Series	Bend relief		Cable ø	
		A	L	min.	max.
GMP.0B.035.069EN	0S-0B	11.0	69.0	1.0	3.5
GMP.1B.062.079EN	1S-1B	16.0	80.0	2.5	6.2
GMP.2B.082.102EN	2S-2B	21.0	102.5	5.0	8.2

- Material: Elastomer rubber black colour
- Operating temperature: -30°C to +120°C

– The overall bend relief shall be installed over plug or free socket fitted with a nut for bend relief.
– The typical applications are shown below.
– The overall bend relief can be cut at different length depending on cable diameter.

Plug-free socket

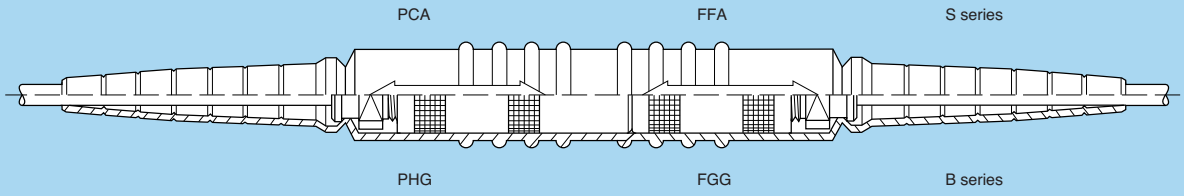

Plug-fixed socket

Optimum protection is offered only when using front panel mounting fixed sockets

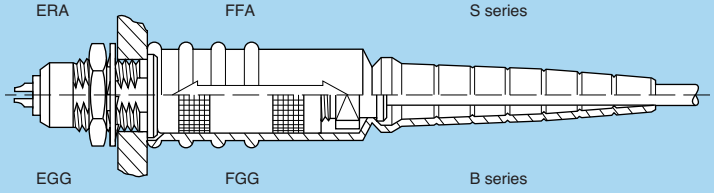

GMF Bend relief with cap for plug



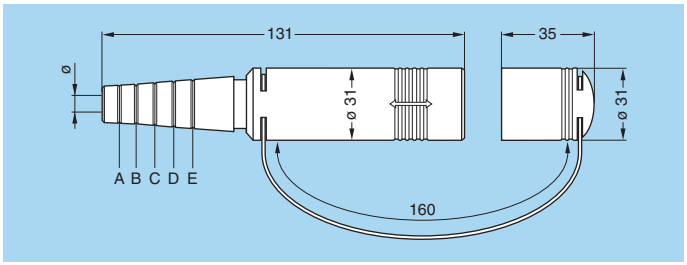

Part number	Series	For models	Cut	admissible ø (mm)	
				min.	max.
GMF.4K.080.EANZ	4E	FFA	–	8.0	8.9
			A	9.0	9.9
			B	10.0	11.4
	4K	FGG	C	11.5	12.9
			D	13.0	14.9
			E	15.0	16.5

● Material: Black EPDM

GMP Bend relief with cap for free socket



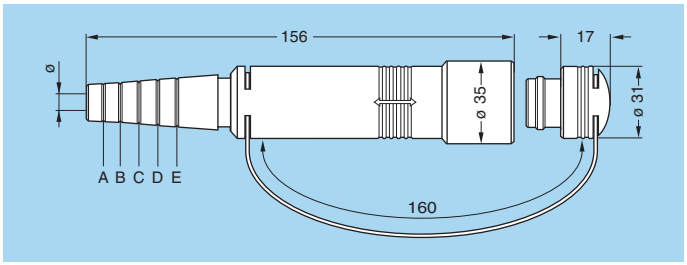

Part number	Series	For models	Cut	admissible ø (mm)	
				min.	max.
GMP.4K.080.EANZ	4E	PCA	–	8.0	8.9
			A	9.0	9.9
			B	10.0	11.4
	4K	PHG	C	11.5	12.9
			D	13.0	14.9
			E	15.0	16.5

● Material: Black EPDM

GSC Lead-through with cable collet



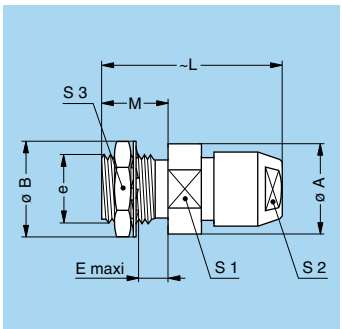

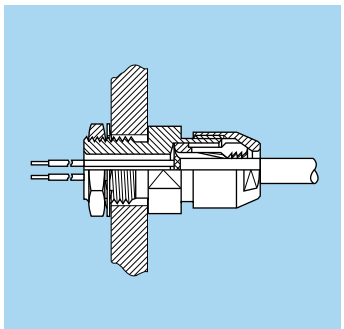

Part number	Dimensions (mm)								
	A	B	e	E	L	M	S1	S2	S3
GSC.00.290.CD••	6.5	8.1	M5x0.5	1.5	16	4.0	5	6	7
GSC.1S.290.ND••	12.0	12.5	M9x0.6	5.0	26	7.5	11	9	11
GSC.3S.290.ND••	17.0	19.5	M15x1.0	8.1	30	12.0	–	14	17

Note: •• = collet cable diameter of the B series. For cable diameter refer to page 67. Other surface treatment available.
The cable collet system stands for both screened and unscreened cables. It can be delivered with a nut for fitting a bend relief it you add a «Z» at the end of the part number.

GCA Earthing washer



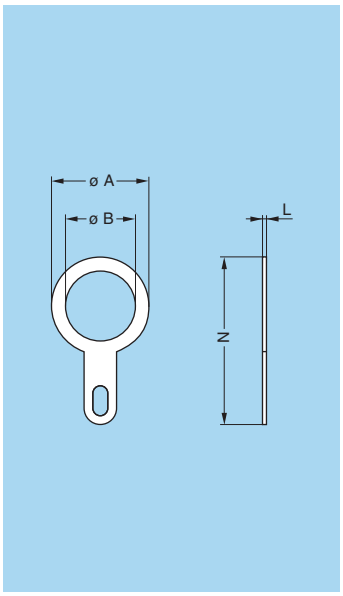

Part number	Series	Dimensions (mm)			
		A	B	L	N
GCA.00.255.LT	00-TT	9.5	7.1	0.4	18.2
GCA.0S.255.LT	0S-0B-0T	13.0	9.1	0.4	22.0
GCA.0E.255.LT	0E-0K	17.0	14.1	0.5	27.5
GCA.1S.255.LT	1S-1B-1T	17.0	12.2	0.5	27.5
GCA.1E.255.LT	1E-1K	20.0	16.2	0.5	32.0
GCA.2S.255.LT	2S-2B-2T	20.0	15.2	0.5	32.0
GCA.2E.255.LT	2E-2K	25.0	20.2	0.5	39.0
GCA.3S.255.LT	3S-3B-3T	25.0	18.2	0.5	39.0
GCA.4S.255.LT	4S-4B	35.0	25.6	0.6	50.0
GCA.4E.255.LT	4E-4K	35.0	30.6	0.6	50.0
GCA.5S.255.LT	5S-5B	42.0	35.1	0.3	57.5

- Material: CuSnZn plated brass (2 µm)

GRA Insulating washers

Sockets or plugs mounted on panels can be fitted with insulating washers. The nine colours available combined with those for the bend reliefs makes colour coding possible.



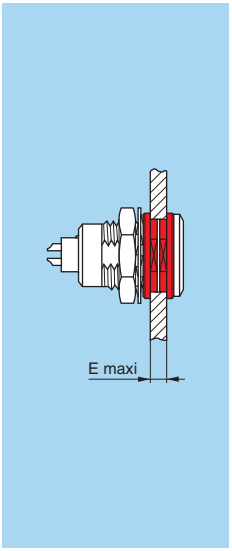

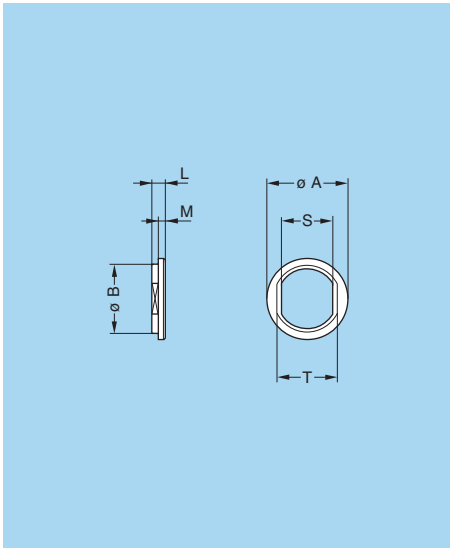

Part number	Series	Dimensions (mm)						
		A	B	E	L	M	S	T
GRA.00.269.GG	00	10.0	8.8	4.5	1.8	1.0	6.4	8.0
GRA.0S.269.GG	0S-0B	12.0	10.8	6.0	1.8	1.0	8.3	9.9
GRA.1S.269.GG	1S-1B	16.0	13.8	6.5	1.8	1.0	10.6	12.2
GRA.2S.269.GG	2S-2B	21.1	17.9	7.3	2.3	1.3	13.6	16.2
GRA.3S.269.GG	3S-3B	25.0	21.8	10.3	2.2	1.2	16.7	20.2
GRA.4S.269.GG	4S-4B	31.9	28.7	10.5	2.5	1.5	23.6	27.1

Note: insulating washers for series 5B are available on request.

Caution: these insulating washers can be used with fixed and free sockets with across flat dimension S1 equivalent to the S dimension of the washer.

- Material: Polyamide
- Maximum operating temperature: 90° C

Ref.	Colour
A	blue
B	white
G	grey

Ref.	Colour
J	yellow
M	brown
N	black

Ref.	Colour
R	red
S	orange
V	green

Note: the last letter «G» of the part number indicates the colour grey for the insulating washer. To obtain an insulating washer of another colour, refer to the table above and change the letter «G» of the part number to the corresponding letter of the colour required. For the panel cut-out, please consult chapter «Panel cut-out» on page 180.

GRC Double panel washers

Double panel washers have been designed to make the drilling of panel holes easier for mounting fixed and free sockets. The combination of the nine different colours of the double panel washers and of the bend reliefs makes colour coding possible.

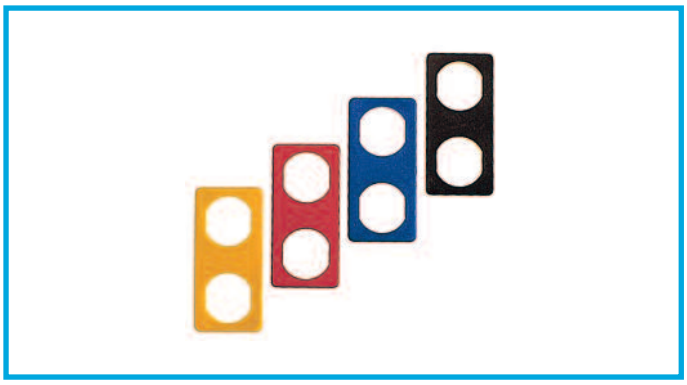

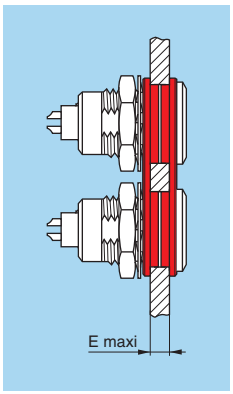

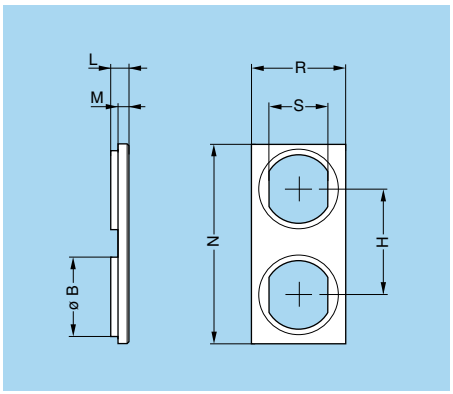

Part number	Series	Dimensions (mm)							
		B	E	H	L	M	N	R	S
GRC.0S.260.HG	0S-0B	10.9	5	14	2.5	1.5	26.5	12.5	8.3
GRC.1B.260.HG	1S-1B	13.9	5	20	3.3	1.8	34.5	14.5	10.6

Caution: these double panel washers can be used with fixed or free sockets with across flat dimension S1 equivalent to the S dimension of the washer.

- Material: Polyamide
- Maximum operating temperature: 90° C

Ref.	Colour	Ref.	Colour	Ref.	Colour
A	blue	**J**	yellow	**R**	red
B	white	**M**	brown	**S**	orange
G	grey	**N**	black	**V**	green

Note: the last letter «G» of the washer's part number indicates the colour grey. For other colours, refer to the above table and replace letter «G» by the one corresponding to the colour required. For the panel cut-out, please consult chapter «Panel cut-out» on page 180.

Tooling

DCG Spanners for hexagonal nuts

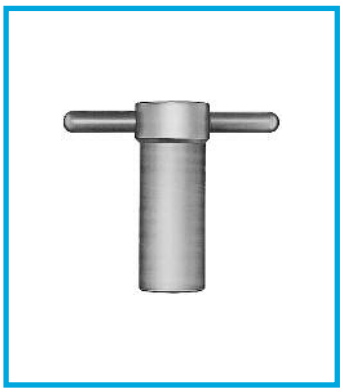

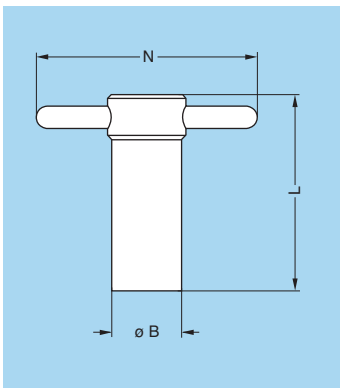

Part number	Dimensions (mm)			Part number of the nut
	B	L	N	
DCG.91.149.0TN	14	40	50	GEA.00.240.LN
DCG.91.161.1TN	16	45	52	GEA.0S.240.LN
DCG.91.201.4TN	20	52	65	GEA.1S.240.LN
DCG.91.231.7TN	23	62	68	GEA.2S.240.LN
DCG.91.282.2TN	28	76	73	GEA.3S.240.LN

- Material: blackened steel

DCA Spanners for hexagonal nuts with locator for flats on socket thread

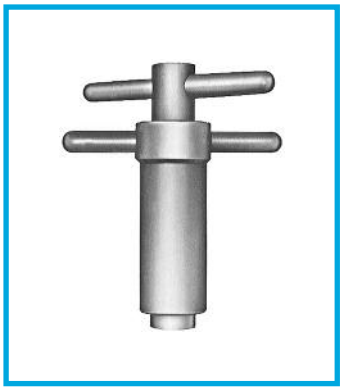

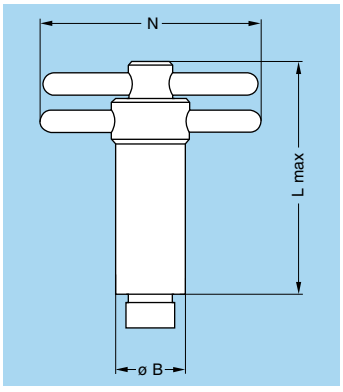

Part number	Dimensions (mm)			Part number of the nut
	B	L	N	
DCA.91.149.0TN	14	65	50	GEA.00.240.LN
DCA.91.161.1TN	16	73	52	GEA.0S.240.LN
DCA.91.201.4TN	20	85	65	GEA.1S.240.LN
DCA.91.231.7TN	23	100	68	GEA.2S.240.LN
DCA.91.282.2TN	28	120	73	GEA.3S.240.LN

- Material: blackened steel

DCB Spanners for round nuts

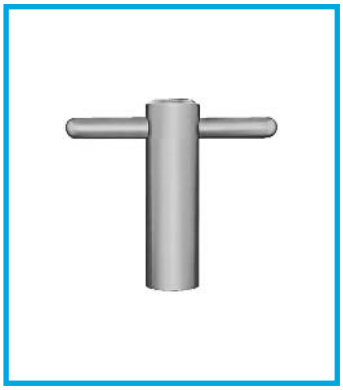

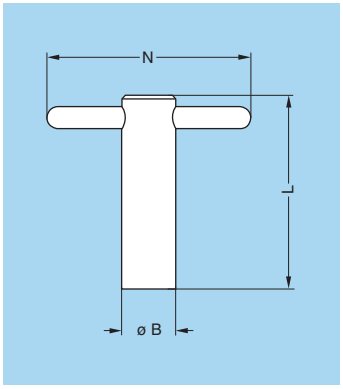

Part number	Dimensions (mm)			Part number of the nut
	B	L	N	
DCB.91.119.0TN	11	40	50	GEB.00.240.LN
DCB.91.131.1TN	13	45	50	GEB.0S.240.LN
DCB.91.161.4TN	16	52	65	GEB.1S.240.LN
DCB.91.201.8TN	20	62	65	GEB.2S.240.LN
DCB.91.242.2TN	24	76	70	GEB.3S.240.LN

- Material: blackened steel

DCH Spanners for conical nuts



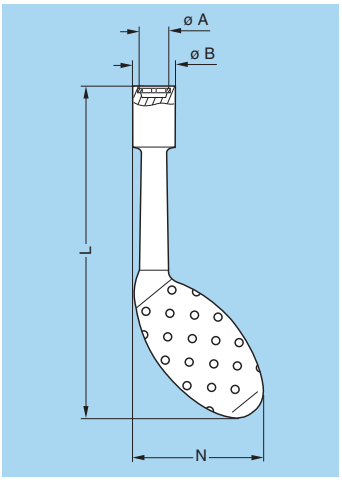

Part number	Dimensions (mm)				Part number of the nut
	A	B	L	N	
DCH.91.101.PN	10.1	12.8	124	48.3	GEC.00.240.LC
DCH.91.121.PN	12.1	14.8	124	49.3	GEC.0S.240.LC
DCH.91.161.PN	16.1	21.0	124	51.9	GEC.1S.240.LC
DCH.91.201.PN	20.1	22.8	129	53.5	GEC.2S.240.LC

- Material: dark grey polyurethane

DCH Spanners for notched nuts



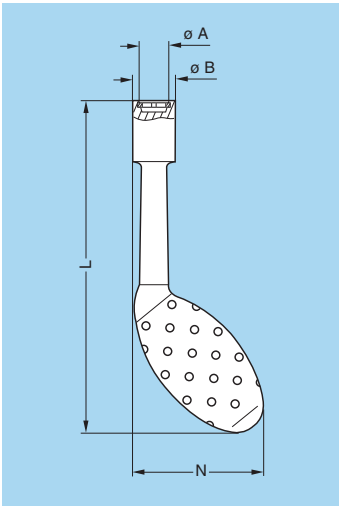

Part number	Dimensions (mm)				Part number of the nut
	A	B	L	N	
DCH.91.101.PA	10.1	12.8	124	48.3	GEG.00.240.LC
DCH.91.121.PA	12.1	14.8	124	49.3	GEG.0S.240.LC
DCH.91.181.PA	18.1	22.8	129	53.1	GEG.0E.240.LC
DCH.91.161.PA	16.1	21.0	124	51.2	GEG.1S.240.LC
DCH.91.201.PA	20.1	22.8	129	53.5	GEG.1E.240.LC
DCH.91.141.PA	14.1	18.6	124	51.2	GEG.1S.242.LC
DCH.91.201.PA	20.1	22.8	129	53.5	GEG.2S.240.LC
DCH.91.241.PA	24.1	30.8	134	52.6	GEG.2S.241.LC
DCH.91.251.PA	25.1	32.8	134	55.5	GEG.2E.240.LC

- Material: blue polyurethane

DCP Flat spanners for collet nut

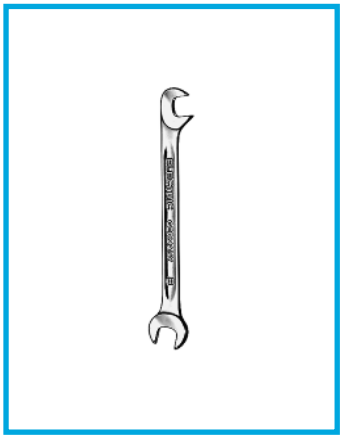

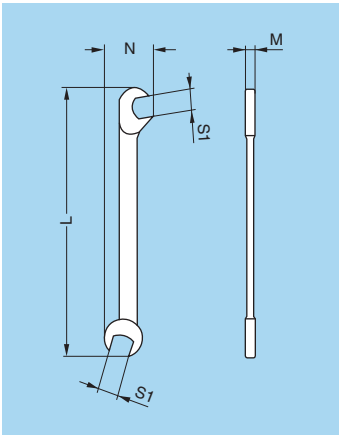

Part number	Dimensions (mm)			
	L	M	N	S1
DCP.99.040.TC	70	0.95	10.5	4.0
DCP.99.045.TC	70	2.00	10.5	4.5
DCP.99.050.TC	78	2.00	12.6	5.0
DCP.99.055.TC	78	2.00	12.6	5.5
DCP.99.060.TC	78	2.00	12.6	6.0

- Material: chrome-plated steel

DCP Set of flat spanners for collet nuts



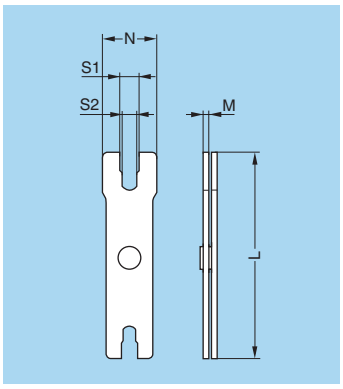

Part number	Series	Dimensions (mm)				
		L	M	N	S1	S2
DCP.91.001.TN	0B	95	2.5	21	8.1	7.1
	1B	95	2.5	25	10.1	9.1
DCP.91.023.TN	2B-2K	115	3.0	30	13.1	12.1
	3B-3K	115	3.0	35	15.1	14.1
DCP.91.045.TN	4B	130	3.0	44	21.1	20.1
	5B	130	3.0	54	31.1	30.1

- Material: blackened steel

DCP Set of flat spanners for collet nuts

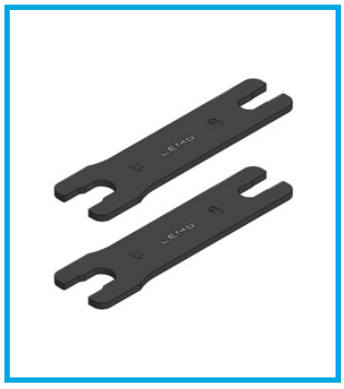

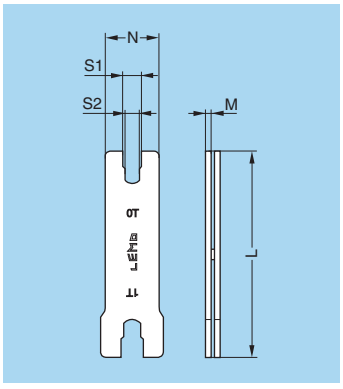

Part number	Series	Dimensions (mm)				
		L	M	N	S1	S2
DCP.0T.110.TN	0T	95	2.5	21	7.55	7.05
	1T	95	2.5	25	11.05	9.05
DCP.2T.110.TN	2T	115	3.0	30	14.05	12.05
	3T	115	3.0	35	16.05	14.05

- Material: blackened steel

DCP Set of flat spanners for FS● retaining ring & collet nuts

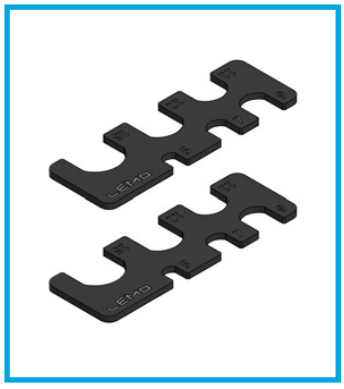

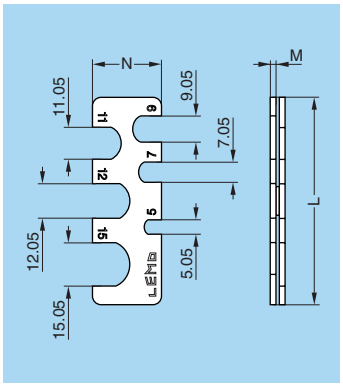

Part number	Series	Dimensions (mm)		
		L	M	N
DCP.91.FSG.TN	00-0B-1B-2B	72	2	24

- Material: blackened steel

DCD Torque wrench

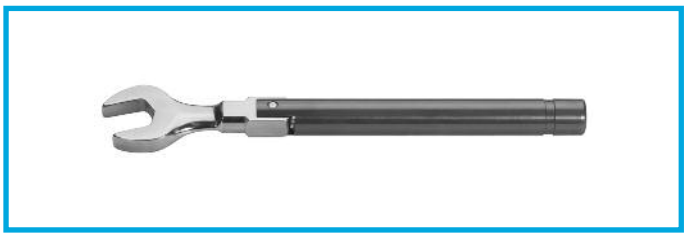

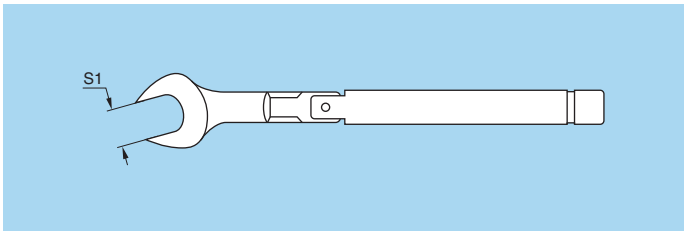

Part number	Series	Torque (Nm)	S1 (mm)
DCD.00.003.PA045	00	0.25	4.5
DCD.00.003.PA050			5.0
DCD.00.003.PA060			6.0
DCD.0B.005.PA070	0B	0.50	7.0
DCD.0B.005.PA080			8.0
DCD.0E.007.PA070	0E/0K	0.70	7.0
DCD.0E.007.PA080			8.0
DCD.0S.005.PA065	0S	0.50	6.5
DCD.1B.015.PA090	1B	1.50	9.0
DCD.1E.008.PA090	1E/1K	0.80	9.0
DCD.1S.015.PA085	1S	1.50	8.5
DCD.2B.025.PA120	2B	2.50	12.0
DCD.2E.020.PA120	2E/2K	2.00	12.0
DCD.2S.025.PA110	2S	2.50	11.0
DCD.3B.040.PA140	3B	4.00	14.0
DCD.3B.040.PA150			15.0
DCD.3E.030.PA150	3E/3K	3.00	15.0
DCD.4E.050.PA190	4E/4K	5.00	19.0

DCL Spanners for assembling plugs with 2 latches



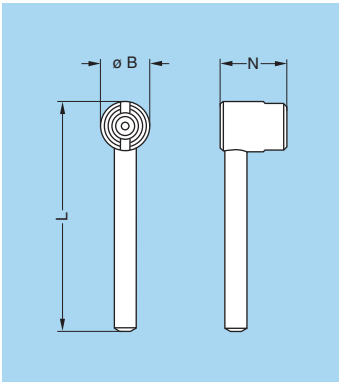

Part number	Series	Dimensions (mm)		
		B	L	N
DCL.91.105.0TK	00	10	45	13.5
DCL.91.127.0TK	0S	12	47	17.0
DCL.91.149.0TK	1S	14	52	19.0

- Material: blackened steel

DCN Spanners for assembling plugs with 3 latches



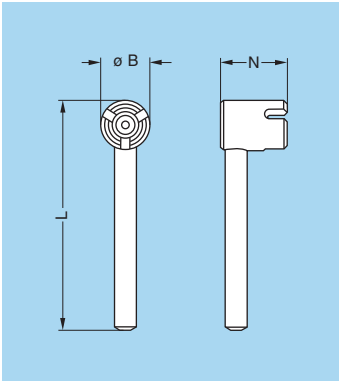

Part number	Series	Dimensions (mm)		
		B	L	N
DCN.91.905.0TK	00	9	42	12
DCN.91.125.0TK	0S	12	47	17
DCN.91.149.0TK	1S	14	53	19
DCN.91.171.2TK	2S-2C	17	63	20
DCN.91.201.5TK	3S	20	74	22

- Material: blackened steel

DCL Assembly tool for FVB.00.303.NLA plugs

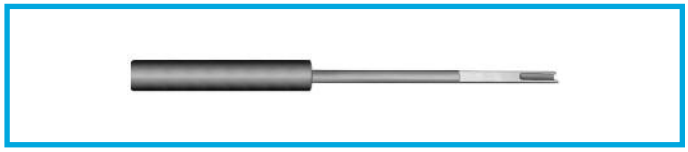

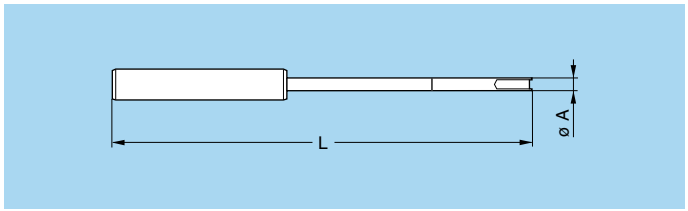

Part number	Series	Dim. (mm)	
		A	L
DCL.91.516.5TK	00	5	165

DPF Pliers for assembling plugs (series K, E and L)



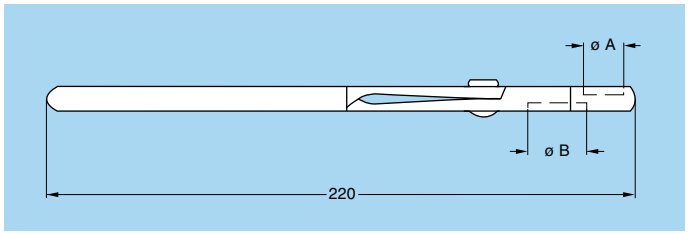

Part number	Series	Dim. (mm)	
		A	B
DPF.91.001.TA	0E-0K-0L	10	–
	1E-1K-1L	–	12
DPF.91.023.TA	2E-2K-2L	15	–
	3E-3K	–	18

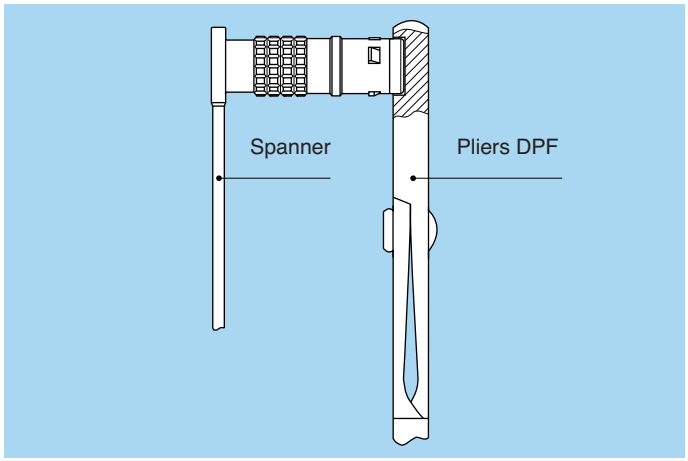

Example for use

The plug end must be held in the pliers whilst the nut is tightened with the flat spanner.

DTA Taps

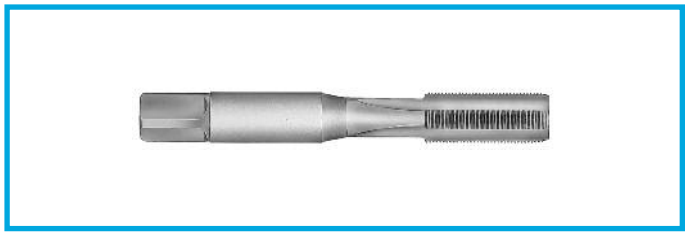

Part number	Series	Thread
DTA.99.700.5Z	00	M7 x 0.5
DTA.99.900.6Z	0S-0B	M9 x 0.6

Crimping tools for electrical contacts

Manual crimping tools

Fig. A

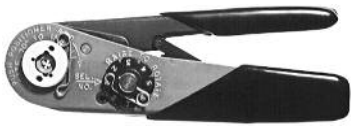

Fig. B

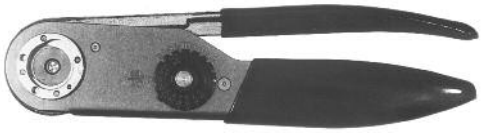

Part number			Supplier
contact ø 0.5-0.7 0.9-1.3 (Fig. A)	contact ø 1.6-2.0 (Fig. B)	contact ø 3.0-4.0 (Fig. B)	
DPC.91.701.V[1)]	**DPC.91.101.A**[2)]	**DPC.91.102.V**	LEMO
MH860[1)]	**AF8**[2)]	**M300BT**	DANIELS
616336[1)]	**615708**[2)]	**–**	ASTRO

[1)] According to specification MIL-C-22520/7-01.
[2)] According to specification MIL-C-22520/1-01.

Pneumatic crimping tools



Part number	Supplier
DPC.91.701.C	LEMO
85230	BALMAR
621101	BUCHANAN

According to specification MIL-C-22520/7-01.
For LEMO contacts ø 0.5-0.7-0.9-1.3 mm

DCK Retention testing tools for crimp contacts 0.5-0.7-0.9 and 1.3 mm diameter



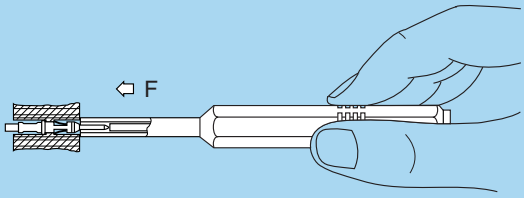

Testing tool part number		Contact ø A (mm)	Test force (N)
For male contact	For female contact		
DCK.91.050.8LRC	**DCK.91.050.8LRM**	0.5	8
DCK.91.071.0LRC	**DCK.91.071.0LRM**	0.7	10
DCK.91.091.4LRC	**DCK.91.091.4LRM**	0.9	14
DCK.91.132.5LRC	**DCK.91.132.5LRM**	1.3	25

DCF Automatic extraction tools for crimp contacts (for FA● and FW● models)



Extractors part number for male and female contacts	Series	Contact ø A (mm)
DCF.92.162.3LT	0B-0K to 3B-3K	1.6
DCF.92.131.3LT		1.3
DCF.92.090.3LT		0.9
DCF.92.070.3LT		0.7

Note:
extractor for FA● of the 4B/4K and 5B/5K still need to be determinated.

Panel cut-outs

P1-P3-P4-P9

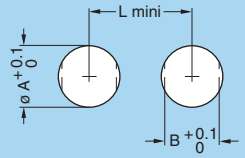

P2-P5-P10-P11

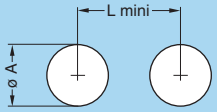

P6-P7

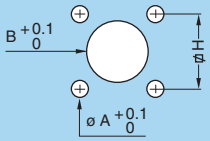

P8

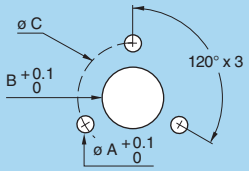

B and T series

Series	P1			P2		P3			P4			P5		P6			P8			P9			P10	
	ø A[1]	B	L	ø A	L	ø A	B	L	ø A	B	L	ø A[2]	L	ø A	B	H	ø A	B	C	ø A	B	L	ø A	L
00-TT	7.1	6.4	12.5	7.1	11.5	–	–	–	–	–	–	–	–	–	–	–	–	–	–	7.1	–	12	–	–
0B-0T	9.1	8.3	14.5	9.1	13.5	14.1	12.6	20.1	10.1	9.1	15.0	8.30	10.5	–	–	–	–	–	–	9.1	8.3	15	–	–
1B-1T	12.1	10.6	18.5	–	–	16.1	14.6	22.0	14.1	12.6	21.0	11.17	14.0	–	–	–	–	–	–	12.1	10.6	19	11.1	17
XB	14.1	12.6	21.5	–	–	–	–	–	–	–	–	–	–	–	–	–	–	–	–	–	–	–	–	–
2B-2T	15.1	13.6	22.5	–	–	19.2	17.1	28.0	16.1	15.1	23.0	13.95	18.0	–	–	–	–	–	–	15.1	13.6	23	–	–
3B-3T	18.2	16.6	27.0	–	–	–	–	–	20.2	18.6	29.5	–	–	–	–	–	–	–	–	18.2	16.6	27	–	–
4B	25.2	23.6	36.0	–	–	–	–	–	25.2	23.6	36.1	–	–	–	–	–	–	–	–	25.2	23.6	36	–	–
5B	35.2	33.6	44.0	–	–	–	–	–	35.2	33.6	47.1	–	–	3.3	35.2	34	2.8	35.2	47	35.2	33.6	47	–	–

Note: [1] when using the tapered washer (GBB) a round hole apply 00-TT: ø 7.6 mm / 0B-0T: ø 9.6 mm / 1B-1T: ø 12.6 mm / 2B-2T: ø 15.7 mm / 3B-3T: ø 18.8 mm / 4B: ø 26 mm / 5B: ø 36 mm (tolerance: 0/+0.02). [2] tolerance: 0/+0.02

Cut-out types

Model	Type
ECG	P1
EEG	P1
EGG	P1
EFG	P2
EHG	P1
EJG	P5

Model	Type
EKG	P1
ENG	P1
ENY	P1
ESG	P1/P2
EXG	P2/P10
EYG	P1/P10

Model	Type
FAG	P1
FWG	P9
HCG	P3
HEG	P9
HGG	P9
HHG	P9

Model	Type
HMG	P9
HNG	P9
PEG	P1
PFG	P1
PKG	P1
R●●	P4

Model	Type
S●●	P4/P9[3]
XBG	P2
XPF	P2
XRB	P2
YHG	P9

Note: [3] in series 1B use P9.

Mounting nut torque

Series	Torque (Nm)	
	Metal shell	Plastic shell[4]
00-TT	1.0	0.4
0B-0T	2.5	0.4
1B-1T	4.5	0.7
XB	5.0	–
2B-2T	6.0	0.8
3B-3T	9.0	1.0
4B	12.0	5.0
5B	17.0	–

Note: [4] these values apply when metal shell are mounted with insulating washer.

S series

Series	P1			P2		P3			P4			P5		P6			P7			P10		P11	
	ø A[1]	B	L	ø A	L	ø A	B	L	ø A	B	L	ø A[2]	L	ø A	B	H	ø A	B	H	ø A	L	ø A	L
00	7.1	6.4	12.5	7.1	11.5	–	–	–	–	–	–	–	–	–	–	–	–	–	–	–	–	–	–
0S	9.1	8.3	14.5	9.1	13.5	12.1	10.6	20.0	10.1	9.1	15	–	–	–	–	–	–	–	–	–	–	9.1	16
1S	12.1	10.6	18.5	12.1	19.0	14.1	12.6	21.0	12.1	10.6	18	11.92	15.5	3.3	12.1	12.7	2.7	11.1	12.4	11.1	17	12.1	19
2S	15.1	13.6	22.5	15.1	21.5	16.1	14.6	22.0	16.1	15.1	23	–	–	3.3	15.1	15.5	–	–	–	–	–	–	–
3S	18.2	16.6	27.0	18.2	27.0	20.2	18.6	30.0	20.2	18.6	29	–	–	3.3	18.2	18.0	–	–	–	–	–	–	–
4S	25.2	23.6	36.0	25.2	34.0	25.2	23.6	36.0	25.2	23.6	36	–	–	–	–	–	–	–	–	–	–	–	–
5S	35.2	33.6	44.0	35.2	44.0	35.2	33.6	47.0	35.2	33.6	47	–	–	4.4	35.2	36.8	–	–	–	–	–	–	–
6S	48.3	45.6	58.0	48.3	58.0	48.3	45.6	60.0	48.3	45.6	60	–	–	–	–	–	–	–	–	–	–	–	–

Note: [1] when using the tapered washer (GBB) a round hole apply 00: ø 7.6 mm / 0S: ø 9.6 mm / 1S: ø 12.6 mm / 2S: ø 15.7 mm / 3S: ø 18.8 mm / 4S: ø 26 mm / 5S: ø 36 mm (tolerance: 0/+0.02). [2] tolerance: 0/+0.02

Cut-out types

Model	Type
EBC	P6
EBD	P6
EBS	P7
ECP	P1
EEP	P1
EHP	P2/P1

Model	Type
ERA	P1
ERC	P1
ERD	P1
ERN	P1
ERS	P2
EXP	P2/P10

Model	Type
EWB	P3
FAA	P1/P2[3]
HCP	P3[4]
HGP	P3
HGW	P11
PSA	P1

Model	Type
PSP	P1
PSS	P1
RAD	P1/P2[5]
SWH	P4

Note: [3] in series 6S use P2. [4] use only ø A in 1S series. [5] in series 4S and 5S use P2.

Mounting nut torque

Series	Torque (Nm)	
	Metal shell	Plastic shell[6]
0S	2.5	0.4
1S	4.5	0.7
2S	6.0	0.8
3S	9.0	1.0
4S	12.0	5.0
5S	17.0	–
6S	22.0	–

Note: [6] these values apply when metal shell are mounted with insulating washer. 1 N = 0.102 kg

Panel cut-out for mounting with insulating washer (S-B series)

GRA

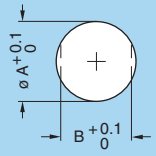

Series	Dim. (mm)	
	ø A	B
00	8.9	8.1
0S-0B	10.9	10.0
1S-1B	13.9	12.3
2S-2B	18.0	16.3
3S-3B	21.9	20.3
4S-4B	29.1	27.4

Panel cut-out for mounting with double panel washer (S-B series)

GRC

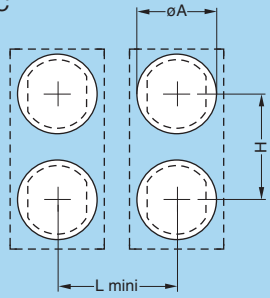

Series	Dimensions (mm)		
	ø A	H	L
0S-0B	11	14	13.5
1S-1B	14	20	17.0

Note: for nut tightening torques please refer to the corresponding series in the table on page 179.

P1

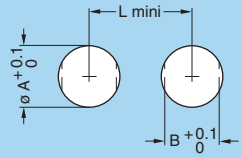

P6-P7

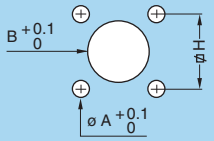

K series

Series	P1			P6			P7		
	ø A	B	L	ø A	B	H	ø A	B	H
0K	14.1	12.6	20.5	–	–	–	–	–	–
1K	16.1	14.6	22.5	–	–	–	–	–	–
2K	20.2	18.6	29.0	–	–	–	–	–	–
3K	24.2	22.6	35.5	3.5	22.6	20.6	3.5	23.1	23.0
4K	30.2	28.6	43.0	3.5	28.6	27.0	3.5	30.1	29.0
5K	45.2	42.6	57.0	4.5	42.6	38.0	4.5	45.1	44.0

Mounting nut torque

Series	Torque (Nm)
0K	5
1K	7
2K	9
3K	12
4K	17
5K	22

1 N = 0.102 kg

Cut-out types

Model	Type
EBG	P7
EDG	P7[2)]
EEG	P1
EGG	P1
EHG	P1

Model	Type
ENG	P1
EVG	P1
FAG	P1
FXG	P6
HEG	P1

Model	Type
HGG	P1
PBG	P7[3)]
PEG	P1
PKG	P1
S●●	P1

Note: [2)] for this model dimension B = 18.1. [3)] for this model dimension B = 19.1.

E and L series

Series	P1			P6		
	ø A	B	L	ø A	B	H
0E-0L	14.1	12.6	20.5	–	–	–
1E-1L	16.1	14.6	22.5	–	–	–
2E-2L	20.2	18.6	29.0	2.9	15.1	11.8x20.4
3E	24.2	22.6	35.5	–	–	–
4E	30.2	28.6	43.0	–	–	–
5E	45.2	42.6	57.0	–	–	–
6E	55.3	52.1	68.0	–	–	–

Mounting nut torque

Series	Torque (Nm)
0E-0L	5
1E-1L	7
2E-2L	9
3E	12
4E	17
5E	22
6E	27

1 N = 0.102 kg

Cut-out types E series

Model	Type
EBR	P6
EEP	P1
EHP	P1
ERA	P1
ERB	P1
ERC	P1

Model	Type
FAA	P1
HGP	P1
PSA	P1
PSP	P1
SWH	P1

Cut-out types L series

Model	Type
EEG	P1
EGG	P1
FAG	P1
HGG	P1
PKG	P1

PCB drilling pattern

Fixed socket with straight print contact (B-K-T series) P15

302

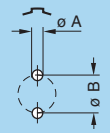

Series	Dimensions	
	A	B
00-TT	0.6	1.2
0B-0K-0T	0.8	2.2
1B-1K-1T	0.8	2.8
2B-2K-2T	0.8	4.4

303

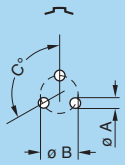

Series	Dimensions		
	A	B	C
00-TT	0.6	1.35	120°
0B-0K-0T	0.8	2.30	120°
1B-1K-1T	0.8	3.00	120°
2B-2K-2T	0.8	4.60	120°
3B-3K-3T	0.8	5.60	120°

304

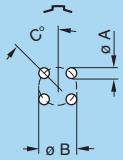

Series	Dimensions		
	A	B	C
00-TT	0.6	1.6	45°
0B-0K-0T	0.6	2.5	45°
1B-1K-1T	0.8	3.1	45°
2B-2K-2T	0.8	5.0	45°
3B-3K-3T	0.8	6.2	45°

305

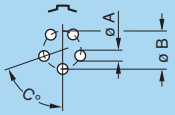

Series	Dimensions		
	A	B	C
00-TT	0.5	1.7	72°

305

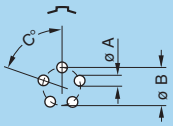

Series	Dimensions		
	A	B	C
0B-0K-0T	0.6	2.8	72°
1B-1K-1T	0.8	3.4	72°
2B-2K-2T	0.8	5.2	72°
3B-3K-3T	0.8	6.7	72°

306

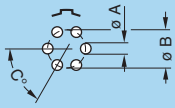

Series	Dimensions		
	A	B	C
0B-0K-0T	0.6	3.0	60°
1B-1K-1T	0.8	3.7	60°

306

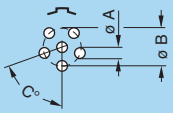

Series	Dimensions		
	A	B	C
2B-2K-2T	0.8	5.6	72°
3B-3K-3T	0.8	7.1	72°

307

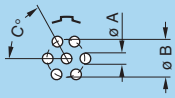

Series	Dimensions		
	A	B	C
0B-0K-0T	0.6	3.00	60°
1B-1K-1T	0.8	3.70	60°
2B-2K-2T	0.8	5.80	60°
3B-3K-3T	0.8	7.08	60°

308

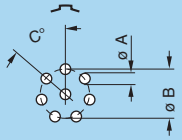

Series	Dimensions		
	A	B	C
1B-1K-1T	0.8	3.8	51°26’

308

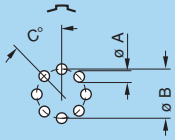

Series	Dimensions		
	A	B	C
2B-2K-2T	0.8	6.4	45°
3B-3K-3T	0.8	7.5	45°

309

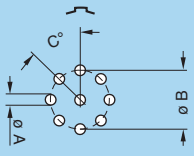

Series	Dimensions		
	A	B	C
0B-0K-0T	0.6	3.2	45°
3B-3K-3T	0.8	7.5	45°

310

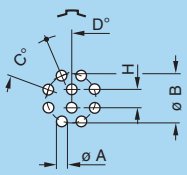

Series	Dimensions				
	A	B	C	D	H
1B-1K-1T	0.6	3.95	45°	22°30’	1.40
2B-2K-2T	0.8	6.30	45°	22°30’	2.15
3B-3K-3T	0.8	7.90	45°	22°30’	2.80

312

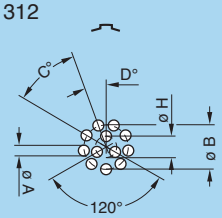

Series	Dimensions				
	A	B	C	D	H
0B-0T	0.5	3.3	40°	20°	1.25

312

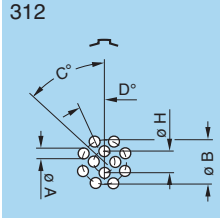

Series	Dimensions				
	A	B	C	D	H
XB	0.8	5.40	45°	22°30’	2.40

312

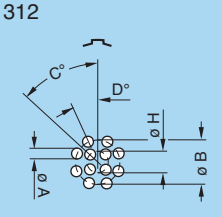

Series	Dimensions				
	A	B	C	D	H
2B-2K-2T	0.8	6.50	45°	22°30’	2.80
3B-3K-3T	0.8	8.20	45°	22°30’	3.40

314

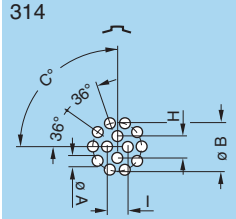

Series	Dimensions				
	A	B	C	H	I
1B-1K-1T	0.6	4.4	90°	1.90	1.80
2B-2K-2T	0.8	6.5	90°	2.65	2.65
3B-3K-3T	0.8	8.2	90°	3.40	3.40

316

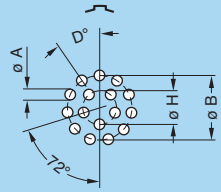

Series	Dimensions			
	A	B	D	H
1B-1K-1T	0.6	4.4	32°44’	2.00

316

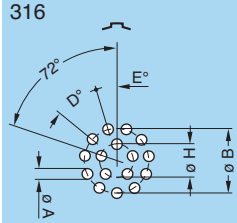

Series	Dimensions				
	A	B	D	E	H
2B-2K-2T	0.8	6.6	32°44’	16°22’	3.10
3B-3K-3T	0.8	8.4	32°44’	16°22’	3.86
4B-4K	0.6	10.5	32°44’	16°22’	5.00

318

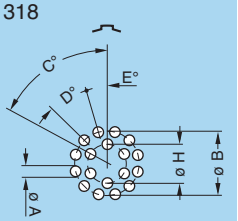

Series	Dimensions					
	A	B	C	D	E	H
2B-2K-2T	0.8	6.7	60°	30°	15°	3.50
3B-3K-3T	0.8	8.4	60°	30°	15°	4.34

319

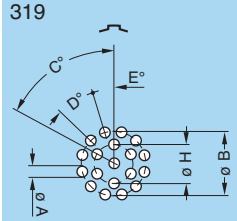

Series	Dimensions					
	A	B	C	D	E	H
2B-2K-2T	0.8	6.7	60°	30°	15°	3.5

320

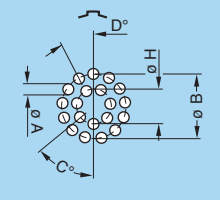

Series	Dimensions				
	A	B	C	D	H
3B-3K-3T	0.6	8.62	51°26’	27°42’	4.78
4B-4K	0.6	11.00	51°26’	27°42’	6.00

322

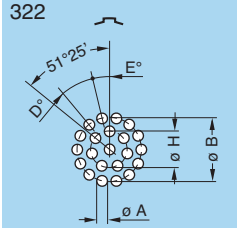

Series	Dimensions				
	A	B	D	E	H
XB	0.6	5.7	25°42’	12°51’	3.1

322

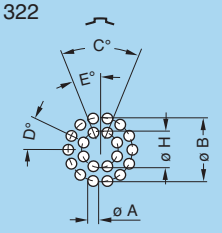

Series	Dimensions					
	A	B	C	D	E	H
3B-3K-3T	0.6	8.8	45°	25°43’	22°30’	5

324

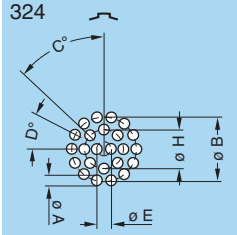

Series	Dimensions					
	A	B	C	D	E	H
3B-3K-3T	0.6	8.8	45°	25°43’	1.8	5.30
4B-4K	0.6	11.1	45°	25°43’	2.2	6.65

2B-2K-2T.326

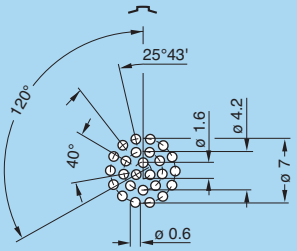

3B-3K-3T.326

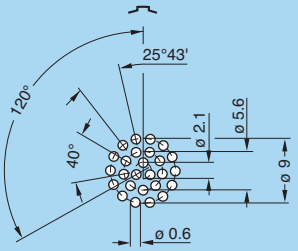

3B-3K-3T.330

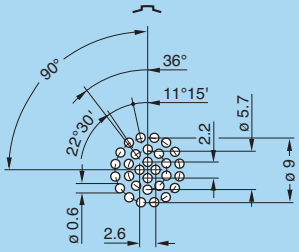

4B-4K.330

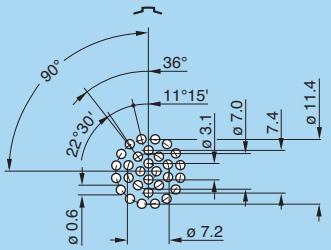

2B-2K-2T.332

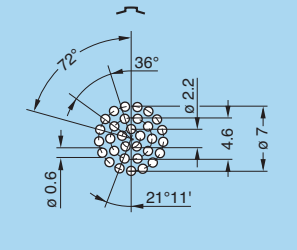

3B-3K.332

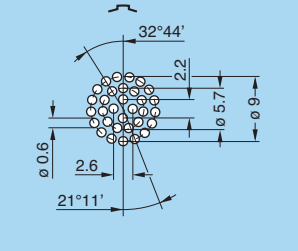

4B-4K.340

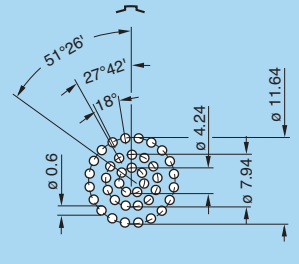

4B-4K.348

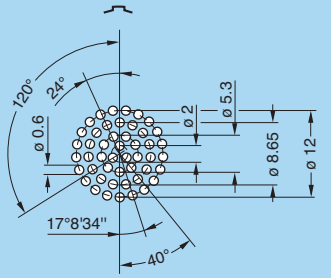

5B-5K.350

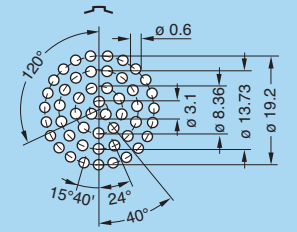

5B-5K.354

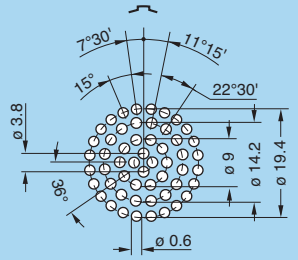

5B-5K.364

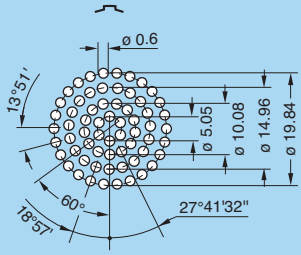

Note: all views are from the side of the socket.

Length of straight print contacts (for socket E●●)

	Type	Dimensions ø C	Dimensions L
00 TT	302/303/304	0.5	3.0
0B 0K 0T	302/303	0.7	3.2
	304/305/306/307/309	0.5	3.2
	312	0.4	3.0
1B 1K 1T	302/303/304/305/306/307/308	0.7	3.0
	310/314/316	0.5	4.0
XB	312	0.7	3.0
	322	0.5	3.0
2B 2K 2T	302/303/304/305/306/307 308/310/312/314/316/318/319	0.7	3.0
	326/332	0.5	3.0
3B 3K 3T	303/304/305/306/307/308/309 310/312/314/316/318	0.7	3.0
	320/322/324/326/330/332	0.5	5.0
4B 4K	316/320/324/330/340/348	0.5	5.0
5B 5K	348	0.7	5.0
	350/354/364	0.5	5.0

Length of straight print contacts (for socket EZG/EYG/XPF)

	Type	Models EZG/EYG ø C	EZG/EYG L	XPF ø C	XPF L
0B	302/303	0.7	4.5	–	–
	304/305	0.5	4.5	0.7	3.0
	306/307/309	0.5	3.0	–	–
1B	302/303/304/305/306/307/308	0.7	3.8	–	–
	310/314/316	0.5	3.8	–	–
2B	302/303/304/305/306/307/308 310/312/314/316/318/319	0.7	5.5	–	–

E●●

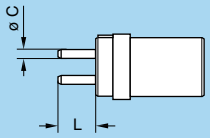

EZG/EYG/XPF

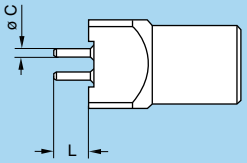

Note: This table does not apply for socket H●●; socket EH● and plugs FA●/FW●.

Fixed socket for printed circuit (B series) P16

Holes for fixing the housing

EYG-EZG

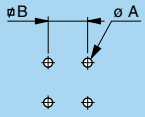

Series	Dimensions A	Dimensions B
00	0.8[1)]	5.08
0B	1.7[2)]	7.62
1B	1.7[2)]	7.62
2B	1.7[2)]	10.16

XPF.0B

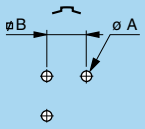

Series	Dimensions A	Dimensions B
0B	1.7	5.08

Note: Mounting torque for screws: 0.1 Nm. [1)] to solder. [2)] to screw.

Fixed socket with elbow print contact (B-K-T series) P17

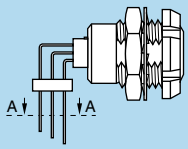

302

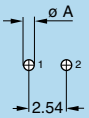

Series	Dim. A
00-TT	0.6
0B-0K-0T	0.7
1B-1K-1T	0.9
2B-2K-2T	0.9

303

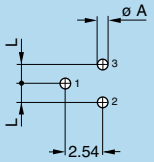

Series	Dimensions A	L
00-TT	0.6	1.27
0B-0K-0T	0.7	1.27
1B-1K-1T	0.9	1.27
2B-2K-2T	0.9	2.54

304

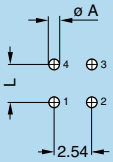

Series	Dimensions A	L
00-TT	0.6	2.54
0B-0K-0T	0.7	2.54
1B-1K-1T	0.7	2.54
2B-2K-2T	0.9	3.50
3B-3K-3T	0.9	2.54

0B-0K-0T.305

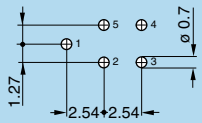

1B-1K-1T.305

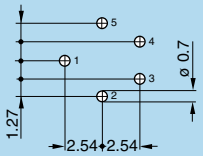

2B-2K-2T.305

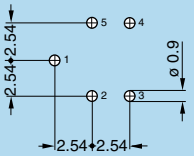

0B-0K-0T / 1B-1K-1T.306

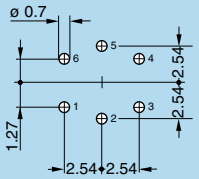

2B-2K-2T / 3B-3K-3T.306

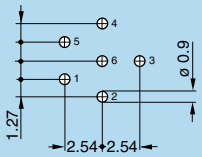

0B-0K-0T / 1B-1K-1T.307

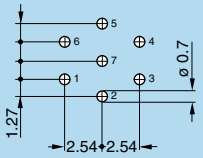

2B-2K-2T.307

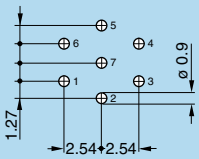

1B-1K-1T.308

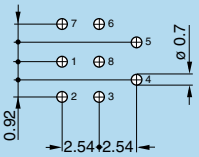

2B-2K-2T / 3B-3K-3T.308

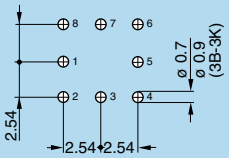

0B-0K-0T.309

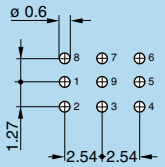

1B-1K-1T / 2B-2K-2T / 3B-3K-3T.310

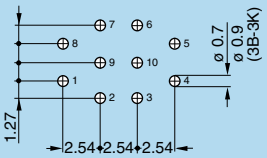

2B-2K-2T / 3B-3K-3T.312

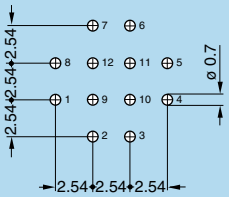

1B-1K-1T / 2B-2K-2T.314

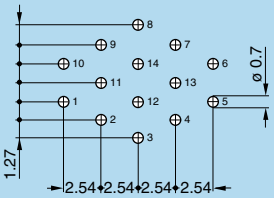

3B-3K-3T.314

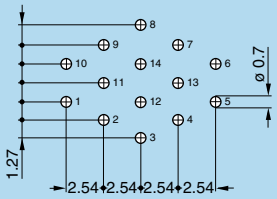

2B-2K-2T / 3B-3K-3T.316

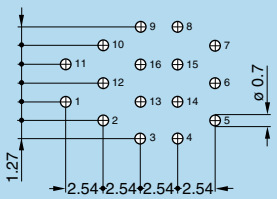

2B-2K-2T.318

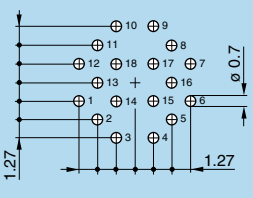

Fixed socket with elbow print contact (B-K-T series) P17

3B-3K-3T.318

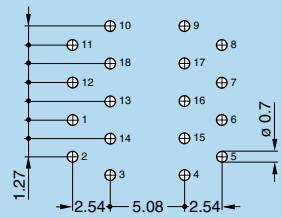

2B-2K-2T.319

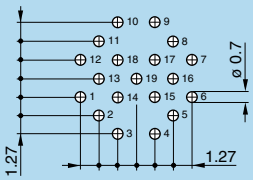

3B-3K-3T.320

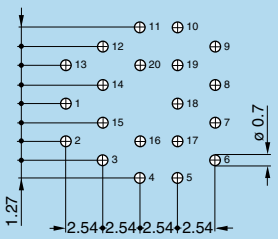

3B-3K-3T.324

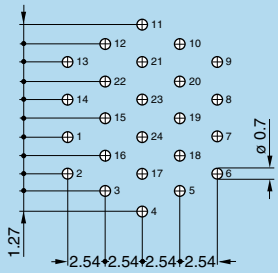

3B-3K-3T.330

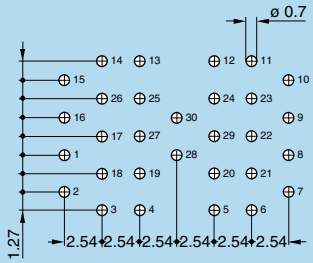

Elbow socket (90°) for printed circuit (B series) P18 P19 P20

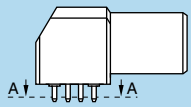

P18 - EPG.00.302 - XBG.00.302
XRB.00.302[1)]

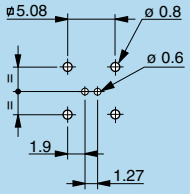

P18 - EPG.00.303[2)] - XBG.00.303[2)]
XRB.00.303[1)]

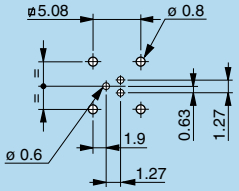

P18 - EPG.00.304 - XBG.00.304
XRB.00.304[1)]

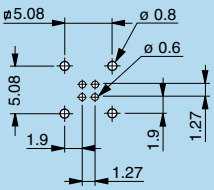

P19 - EPG-EXG (0B/1B.302)
Solder mount

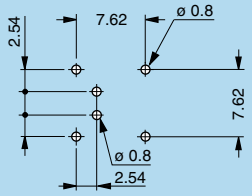

P19 - EPG-EXG (0B/1B.302)
Screw mount

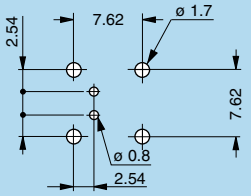

P19 - EPG-EXG (0B/1B.303)
Solder mount

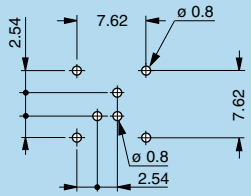

P19 - EPG-EXG (0B/1B.303)
Screw mount

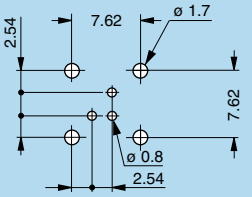

P19 - EPG-EXG (0B/1B.304)
Solder mount

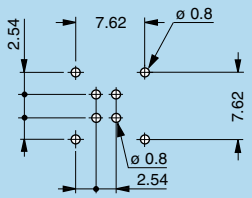

P19 - EPG-EXG (0B/1B.304)
Screw mount

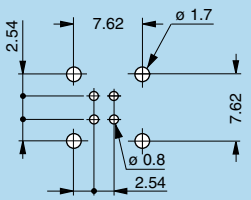

P19 - EPG-EXG (0B/1B.305)
Solder mount

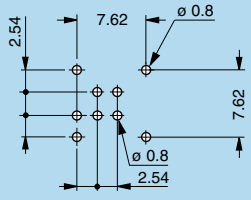

P19 - EPG-EXG (0B/1B.305)
Screw mount

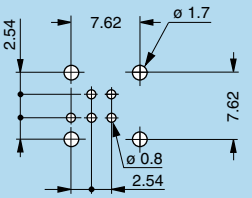

Note: [1)] for the XRB.00 series the holes for shell fixing are different (see p. 35).
[2)] the dimensions for the EPG.00.303.HLN and XBG.00.303.HLN models are given on page 26. For other models please contact factory.

Elbow socket (90°) for printed circuit (B series) P18 P19 P20

P19 - EPG-EXG (0B/1B.306)
Solder mount

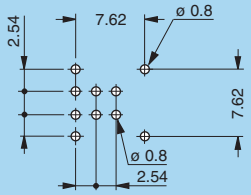

P19 - EPG-EXG (0B/1B.306)
Screw mount

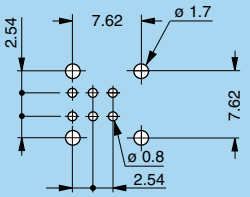

P19 - EPG-EXG (0B/1B.307)
Solder mount

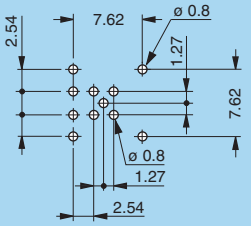

P19 - EPG-EXG (0B/1B.307)
Screw mount

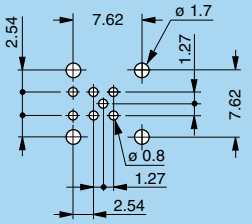

P19 - EPG-EXG (1B.308)
Solder mount

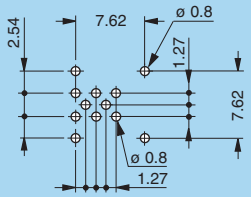

P19 - EPG-EXG (1B.308)
Screw mount

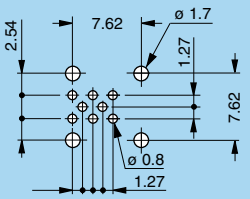

P19 - EPG-EXG (0B.309)
Solder mount

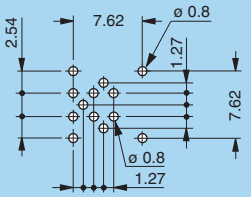

P19 - EPG-EXG (0B.309)
Screw mount

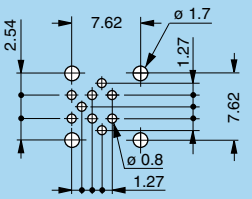

P19 - EPG-EXG (1B.310)
Solder mount

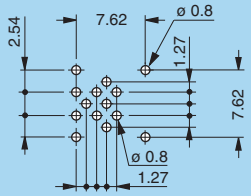

P19 - EPG-EXG (1B.310)
Screw mount

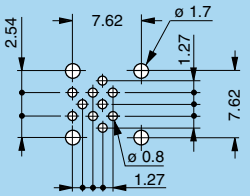

P20 - EPG.1B.314
Solder mount

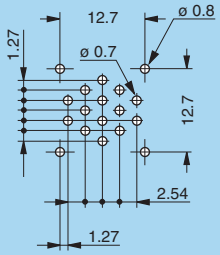

P20 - EPG.1B.314
Screw mount

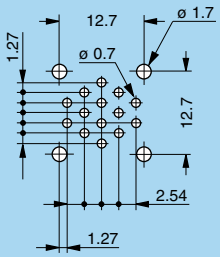

Note: 1) for the XRB.00 series the holes for shell fixing are different (see p. 35).
2) the dimensions for the EPG.00.303.HLN and XBG.00.303.HLN models are given on page 26. For other models please contact factory.

Fixed socket with straight print contact (S-E series) P21

302

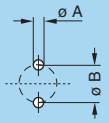

Series	Dimensions	
	A	B
0S-0E	0.8	2.2
1S-1E	0.8	3.0

303

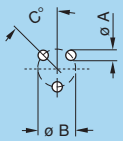

Series	Dimensions		
	A	B	C
0S-0E	0.6	2.8	45°
1S-1E	0.8	3.5	45°
2S-2E	0.8	5.5	60°

304

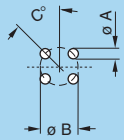

Series	Dimensions		
	A	B	C
0S-0E	0.6	2.8	45°
1S-1E	0.8	3.5	45°
2S-2E	0.8	5.0	45°

305

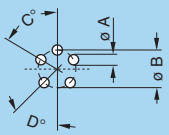

Series	Dimensions			
	A	B	C	D
1S-1E	0.8	3.5	60°	45°
2S-2E	0.8	5.5	60°	60°

306

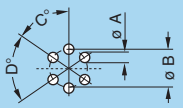

Series	Dimensions			
	A	B	C	D
0S-0E	0.6	3	55°	70°

306

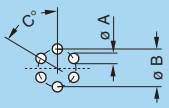

Series	Dimensions		
	A	B	C
1S-1E	0.8	3.5	60°
2S-2E	0.8	5.5	60°
3S-3E	0.8	6.5	60°

Fixed socket with straight print contact (S-E series) P21

307

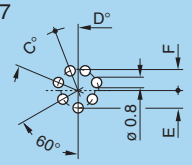

Series	Dimensions			
	C	D	E	F
2S-2E	45°	22°30’	2.75	3.25
3S-3E	45°	22°30’	3.25	3.90

308

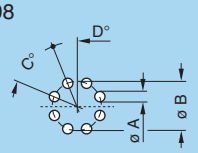

Series	Dimensions			
	A	B	C	D
2S-2E	0.8	6.5	45°	22°30’
3S-3E	0.8	7.8	45°	22°30’

310

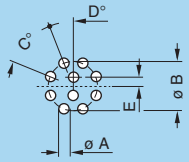

Series	Dimensions				
	A	B	C	D	E
2S-2E	0.8	6.5	45°	22°30’	1.25
3S-3E	0.8	7.8	45°	22°30’	1.50

3S-3E.312

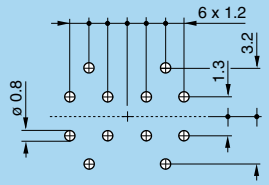

3S-3E.313

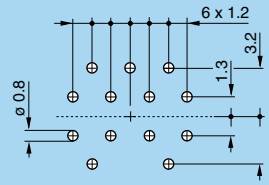

3S-3E.314

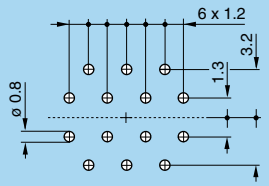

3S-3E.316

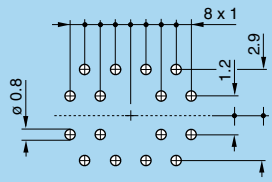

3S-3E.318

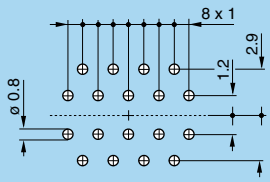

Note: all views are from the side of the socket.

Length of straight print contacts (for socket E●●)

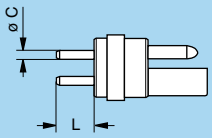

	Type	Dimensions	
		ø C	L
0S 0E	**302**	0.7	3.0
	303/304/306	0.5	3.0
1S 1E	**302**	0.7/1.5	3.0/5.0
	303/304/305	0.7	3.0
	305/306	0.5	3.0

	Type	Dimensions	
		ø C	L
2S 2E	**303/304/305/306/307/308/310**	0.7	3.0
3S 3E	**305/306/307/308/310 312/313/314/316/318**	0.7	3.0

Note: This table does not apply for HGP and EHP sockets and for FAA plugs.

Elbow socket (90°) for printed circuit (S series) P22 P23

P22 - EPL - EXP
Solder mount

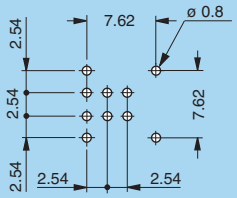

P22 - EPL - EXP
Screw mount

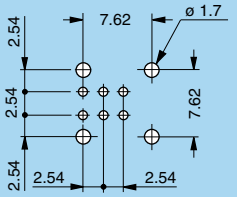

P23 - EPL.00.113

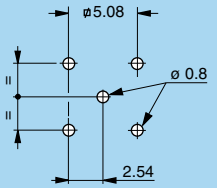

P23 - EPL.0S.116

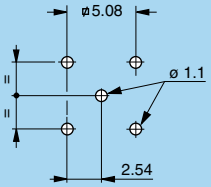

Note: all dimensions are in millimetres.

Fixed socket with elbow print contact (S-E series) P24

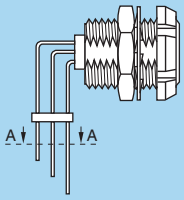

302

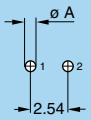

Series	Dim. A
0S-0E	0.7
1S-1E	0.9

303

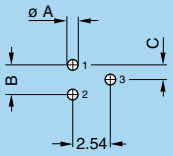

Series	Dimensions A	B	C
0S-0E	0.7	2.00	1.00
1S-1E	0.7	2.48	1.24

304

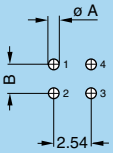

Series	Dimensions A	B
0S-0E	0.7	2.0
1S-1E	0.7	3.5
2S-2E	0.9	3.5

305

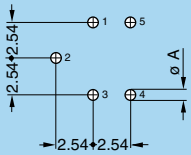

Series	Dim. A
1S-1E	0.7
2S-2E	0.9

306

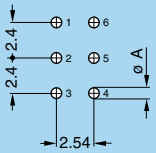

Series	Dim. A
1S-1E	0.7
2S-2E	0.9

2S-2E.307

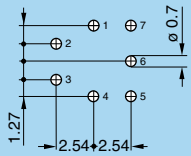

2S-2E.308

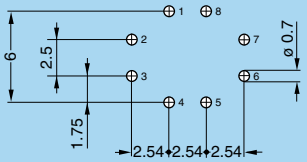

2S-2E / 3S-3E.310

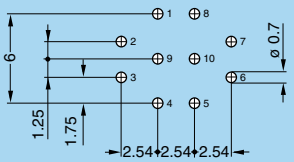

3S-3E.312

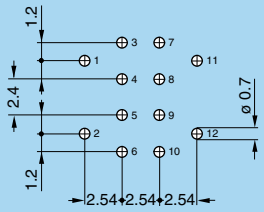

3S-3E.314

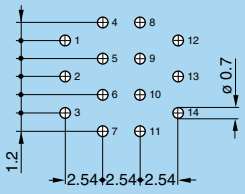

3S-3E.316

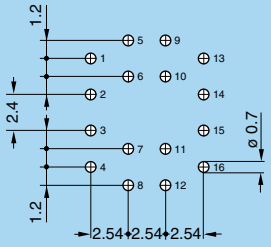

Cable assembly (B, K, T, S and E series)

Cable stripping lengths (B series)

M1 straight plugs and sockets with cable collet, clamping type D or M (solder or crimp contacts)

M3 elbow plugs (90°) with cable collet, clamping type D or M (solder or crimp contacts)

	Type	ø contact A (mm)	Cable stripping lengths (mm)											
			M1						M3					
			Solder			Crimp			Solder			Crimp		
			L	S	T	L	S	T	L	S	T	L	S	T
00	302/303/304	0.5	7.0	4	2.5	10.0	4	3.0	9.5	4	2.5	12.5	4	3.0
	305/306	0.35	7.0	4	2.5	–	–	–	9.5	4	2.5	–	–	–
0B[1]	302/303	0.9	14.5	7	3.5	17.0	7	4.0	19.5	7	3.5	22.0	7	4.0
	304/305	0.7	14.5	7	3.5	17.0	7	4.0	19.5	7	3.5	22.0	7	4.0
	306/307/309[2]	0.5	14.0	7	2.5	18.0	7	3.0	19.0	7	2.5	23.0	7	3.0
	312	0.35	14.0	7	2.5	–	–	–	19.0	7	2.5	–	–	–
1B[1]	302/303	1.3	14.5	8	3.5	18.0	8	4.0	25.5	8	3.5	28.0	8	4.0
	304/305	0.9	14.5	8	3.0	18.0	8	4.0	25.5	8	3.0	28.0	8	4.0
	306/307/308	0.7	14.5	8	3.0	18.0	8	4.0	25.5	8	3.0	28.0	8	4.0
	310/314/316	0.5	16.5	8	2.5	–	–	–	27.5	8	2.5	–	–	–
XB	312	0.7	16.5	7.5	3.5	–	–	–	–	–	–	–	–	–
	322	0.5	17.5	8	4.0	–	–	–	–	–	–	–	–	–
2B	302	2.0	19.0	9	4.0	22.0	9	5.5	30.0	9	4.0	33.0	9	5.5
	303	1.6	19.0	9	3.5	22.0	9	5.5	30.0	9	3.5	33.0	9	5.5
	304/305/306/307	1.3	18.0	9	3.5	20.0	9	4.0	29.0	9	3.5	31.0	9	4.0
	308/310	0.9	17.0	9	3.0	20.0	9	4.0	28.0	9	3.0	31.0	9	4.0
	312/314/316/318/319	0.7	17.0	9	3.0	20.0	9	4.0	28.0	9	3.0	31.0	9	4.0
	326/332	0.5	17.0	9	2.5	–	–	–	28.0	9	2.5	–	–	–
3B	302	3.0	24.0	10	4.5	28.0	10	5.5	35.0	10	4.5	39.0	10	5.5
	303/304	2.0	23.0	10	4.0	27.0	10	5.5	34.0	10	4.0	38.0	10	5.5
	305/306/307	1.6	23.0	10	3.5	27.0	10	5.5	34.0	10	3.5	38.0	10	5.5
	308/310	1.3	22.0	10	3.5	25.0	10	4.0	33.0	10	3.5	36.0	10	4.0
	309	1.3 2.0	22.0	10	3.5 4.0	25.0	10	4.0 5.5	33.0	10	3.5 4.0	36.0	10	4.0 5.5
	312/314/316/318	0.9	21.0	10	3.0	25.0	10	4.0	32.0	10	3.0	36.0	10	4.0
	320/322/324/326/330/332	0.7	21.0	10	3.0	25.0	10	4.0	32.0	10	3.0	36.0	10	4.0

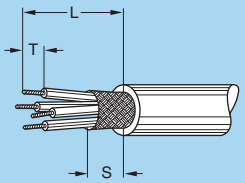

Note: [1] In 0B and 1B series, «L» and «S» dimensions shall be increased by 2 mm for the largest collet (D56 in 0B series; D76 in 1B series). The tolerances on these dimensions are: L: ± 0.5 mm; S: ± 0.5 mm; T: ± 0.2 mm.

Cable stripping lengths (B series)

M1 straight plugs and sockets with cable collet, clamping type D or M (solder or crimp contacts)

M3 elbow plugs (90°) with cable collet, clamping type D or M (solder or crimp contacts)

	Type	ø contact A (mm)	Cable stripping lengths (mm)											
			M1						M3					
			Solder			Crimp			Solder			Crimp		
			L	S	T	L	S	T	L	S	T	L	S	T
4B	304	3.0	33.0	12	4.5	36.0	12	5.5	41.0	12	4.5	45.0	12	5.5
	306/307	2.0	32.0	12	4.0	36.0	12	5.5	41.0	12	4.0	45.0	12	5.5
	310	1.6	32.0	12	3.5	36.0	12	5.5	39.0	12	3.5	43.0	12	5.5
	312	1.3	32.0	12	3.5	36.0	12	4.0	39.0	12	3.5	43.0	12	4.0
	316/320/324/330	0.9	32.0	12	3.0	34.0	12	4.0	39.0	12	3.0	43.0	12	4.0
	340/348	0.7	32.0	12	3.0	34.0	12	4.0	39.0	12	3.0	43.0	12	4.0
5B[1)]	302	6.0	42.0	18	7.5	–	–	–	70.0	18	7.5	–	–	–
	304	4.0	47.0	18	5.5	50.0	18	7.0	75.0	18	5.5	78.0	18	7.0
	310	3.0	47.0	18	4.5	50.0	18	7.0	75.0	18	4.5	78.0	18	7.0
	314/316	2.0	46.0	18	4.0	49.0	18	5.5	74.0	18	4.0	77.0	18	5.5
	320	1.6	46.0	18	3.5	49.0	18	5.5	74.0	18	3.5	77.0	18	5.5
	330/340/348	1.3	45.0	18	3.5	48.0	18	4.0	74.0	18	3.5	77.0	18	4.0
	350/354/364	0.9	45.0	18	3.0	48.0	18	4.0	74.0	18	3.0	77.0	18	4.0

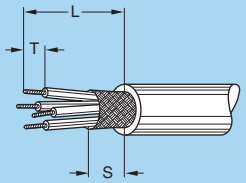

M5 elbow plugs (90°) with cable collet, clamping type D or M (solder or crimp contacts)

	Type	ø contact A (mm)	Cable stripping lengths (mm)					
			M5					
			Solder			Crimp		
			L	S	T	L	S	T
00	302/303/304	0.5	14.0	4	2.5	17.0	5	3.0
	305/306	0.35				–	–	–
0B	302/303	0.9	19.0	7	3.5	20.0	7	4.0
	304/305	0.7	19.0	7	3.5	20.0	7	4.0
	306/307/309[1)]	0.5	18.0	7	2.5	21.0	7	3.0
	312	0.35				–	–	–
1B	302/303	1.3	22.5	8	4.0	24.0	8	4.0
	304/305	0.9	22.0	8	3.5	24.0	8	4.0
	306/307[2)]/308	0.7	22.0	8	3.5	24.0	8	4.0
	310/314/316[3)]	0.5	21.5	8	2.5	–	–	–
2B	302	2.0				29.0	9	5.5
	303	1.6	26.0	9	3.5			
	304/305/306/307	1.3				29.0	9	4.0
	308/310	0.9	26.5	9	3.0	29.0	9	4.0
	312/314/316/318/319	0.7				29.0	9	4.0
	326/332	0.5				–	–	–

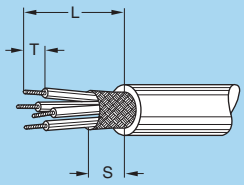

Note: [1)] center wire L = 16.5. [2)] center wire L = 20.5. [3)] 5 center wires L = 20.5.
The tolerances on these dimensions are: L: ± 0.5 mm; S: ± 0.5 mm; T: ± 0.2 mm.

Cable stripping lengths (B series)

M4 **straight plug, short version, clamping type D or M (solder or crimp contacts)**

	Type	ø contact A (mm)	Cable stripping lengths (mm) M4 Solder L	S	T	Crimp L	S	T
0B	302/303	0.9	9.5	8	3.0	13.0	8	4.0
	304/305	0.7	9.5	8	3.0	13.0	8	4.0
	306/307/309[2)]	0.5	10.0	8	2.5	13.5	8	3.0

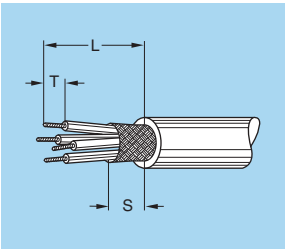

M2 **straight plug, long version, clamping type D or M (solder or crimp contacts)**

	Type	ø contact A (mm)	Cable stripping lengths (mm) M2 Solder L	S	T	Crimp L	S	T
1B[1)]	302/303	1.3	39.5	8	3.5	43.0	8	4.0
	304/305	0.9	39.5	8	3.0	43.0	8	4.0
	306/307/308	0.7	39.5	8	3.0	43.0	8	4.0
	310/314/316	0.5	42.0	8	2.5	–	–	–
2B	302	2.0	49.0	9	4.0	53.0	9	5.5
	303	1.6	49.0	9	3.5	53.0	9	5.5
	304/305/306/307	1.3	48.0	9	3.5	50.0	9	4.0
	308/310	0.9	47.0	9	3.0	49.0	9	4.0
	312/314/316/318/319	0.7	47.0	9	3.0	49.0	9	4.0
	326/332	0.5	47.0	9	2.5	–	–	–

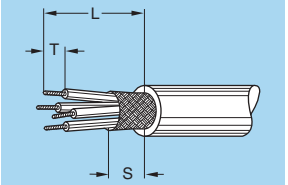

Note: [1)] In 1B series, «L» and «S» dimensions shall be increased by 2 mm for the largest collet (D76 in 1B series). In 5B series, «L» and «S» dimensions shall be increased by 13 mm for the largest collet (D25). [2)] Crimp contacts are available only for connectors fitted with male contacts.
The tolerances on these dimensions are: L: ± 0.5 mm; S: ± 0.5 mm; T: ± 0.2 mm.

Cable stripping lengths (K series)

M1 straight plugs and sockets with cable collet, clamping type C (solder or crimp contacts)

M3 elbow plug (90°) with cable collet, clamping type C (solder or crimp contacts)

	Type	ø contact A (mm)	Cable stripping lengths (mm)											
			M1						M3					
			Solder			Crimp			Solder			Crimp		
			L	S	T	L	S	T	L	S	T	L	S	T
0K	302/303	0.9	9.5	6	3.5	12.0	6	4.0	22.5	6	3.5	25.0	6	4.0
	304/305	0.7	9.5	6	3.5	12.0	6	4.0	22.5	6	3.5	25.0	6	4.0
	306/307/309[1)]	0.5	9.0	6	2.5	13.0	6	4.0	22.0	6	2.5	26.0	6	4.0
	312	0.35	9.0	6	2.5	–	–	–	22.0	6	2.5	–	–	–
1K	302/303	1.3	11.0	7	3.5	14.5	7	4.0	27.5	7	3.5	31.0	7	4.0
	304/305	0.9	11.0	7	3.0	14.5	7	4.0	27.5	7	3.0	31.0	7	4.0
	306/307/308	0.7	11.0	7	3.0	14.5	7	4.0	27.5	7	3.0	31.0	7	4.0
	310/314/316	0.5	13.0	7	2.5	–	–	–	29.5	7	2.5	–	–	–
2K	302	2.0	16.5	8	4.0	19.5	8	5.5	36.0	8	4.0	39.0	8	5.5
	303	1.6	16.5	8	3.5	19.5	8	5.5	36.0	8	3.5	39.0	8	5.5
	304/305/306/307	1.3	15.5	8	3.5	17.5	8	4.0	35.0	8	3.5	37.0	8	4.0
	308/310	0.9	14.5	8	3.0	17.5	8	4.0	34.0	8	3.0	37.0	8	4.0
	312/314/316/318/319	0.7	14.5	8	3.0	17.5	8	4.0	34.0	8	3.0	37.0	8	4.0
	326/332	0.5	14.5	8	2.5	–	–	–	34.0	8	2.5	–	–	–
3K	302	3.0	19.0	10	4.5	23.0	10	5.5	48.0	10	4.5	53.0	10	5.5
	303/304	2.0	18.0	10	4.0	22.0	10	5.5	48.0	10	4.0	52.0	10	5.5
	305/306/307	1.6	18.0	10	3.5	22.0	10	5.5	48.0	10	3.5	52.0	10	5.5
	308/310	1.3	17.0	10	3.5	20.0	10	4.0	47.0	10	3.5	50.0	10	4.0
	309	1.3 2.0	17.0	10	3.5 4.0	20.0	10	4.0 5.5	47.0	10	3.5 4.0	50.0	10	4.0 5.5
	312/314/316/318	0.9	16.0	10	3.0	20.0	10	4.0	46.0	10	3.0	50.0	10	4.0
	320/322/324/326/330	0.7	16.0	10	3.0	20.0	10	4.0	46.0	10	3.0	50.0	10	4.0
4K	304	3.0	22.0	11	4.5	25.0	11	5.5	52.0	11	4.5	55.0	11	5.5
	306/307	2.0	21.0	11	4.0	25.0	11	5.5	51.0	11	4.0	55.0	11	5.5
	310	1.6	21.0	11	3.5	25.0	11	5.5	51.0	11	3.5	55.0	11	5.5
	312	1.3	21.0	11	3.5	25.0	11	4.0	51.0	11	3.5	55.0	11	4.0
	316/320/324/330	0.9	21.0	11	3.0	23.0	11	4.0	51.0	11	3.0	53.0	11	4.0
	340/348	0.7	21.0	11	3.0	23.0	11	4.0	51.0	11	3.0	53.0	11	4.0
5K	302	6.0	24.0	14	7.5	–	–	–	–	–	–	–	–	–
	304	4.0	29.0	14	5.5	32.0	14	7.0	–	–	–	–	–	–
	310	3.0	29.0	14	4.5	32.0	14	7.0	–	–	–	–	–	–
	314/316	2.0	28.0	14	4.0	31.0	14	5.5	–	–	–	–	–	–
	320	1.6	28.0	14	3.5	31.0	14	5.5	–	–	–	–	–	–
	330/340/348	1.3	27.0	14	3.5	30.0	14	4.0	–	–	–	–	–	–
	350/354/364	0.9	27.0	14	3.0	30.0	14	4.0	–	–	–	–	–	–

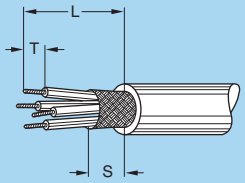

Note: [1)] crimp contacts are available only for connectors fitted with male contacts. The tolerances on these dim. are: L: ± 0.5 mm; S: ± 0.5 mm; T: ± 0.2 mm.

Cable stripping lengths (K series)

M2 **straight plug and socket with oversize cable collet, clamping type K (solder or crimp contacts)**

	Type	ø contact A (mm)	Cable stripping lengths (mm) M2 Solder L	S	T	Crimp L	S	T
1K	302/303	1.3	23.5	8	3.5	27.5	8	4.0
	304/305	0.9	23.5	8	3.0	27.5	8	4.0
	306/307/308	0.7	23.5	8	3.0	27.5	8	4.0
	310/314/316	0.5	24.5	8	2.5	–	–	–
2K	302	2.0	29.5	10	4.0	32.5	10	5.5
	303	1.6	29.5	10	3.5	32.5	10	5.5
	304/305/306/307	1.3	28.5	10	3.5	30.5	10	4.0
	308/310	0.9	27.5	10	3.0	30.5	10	4.0
	312/314/316/318/319	0.7	27.5	10	3.0	30.5	10	4.0
	326/332	0.5	27.5	10	2.5	–	–	–
3K	302	3.0	37.0	11	4.5	41.0	11	5.5
	303/304	2.0	36.0	11	4.0	40.0	11	5.5
	305/306/307	1.6	36.0	11	3.5	40.0	11	5.5
	308/310	1.3	35.0	11	3.5	38.0	11	4.0
	309	1.3 2.0	35.0	11	3.5 4.0	38.0	11	4.0 5.5
	312/314/316/318	0.9	34.0	11	3.0	38.0	11	4.0
	320/322/324/326/330	0.7	34.0	11	3.0	38.0	11	4.0
4K	304	3.0	45.0	14	4.5	48.0	14	5.5
	306/307	2.0	44.0	14	4.0	48.0	14	5.5
	310	1.6	44.0	14	3.5	48.0	14	5.5
	312	1.3	44.0	14	3.5	48.0	14	4.0
	316/320/324/330	0.9	44.0	14	3.0	46.0	14	4.0
	340/348	0.7	44.0	14	3.0	46.0	14	4.0

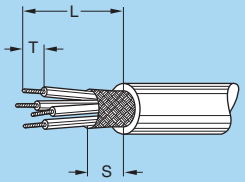

Note: the tolerances on these dim. are: L: ± 0.5 mm; S: ± 0.5 mm; T: ± 0.2 mm.

Cable stripping lengths (T series)

M1 **straight plugs and sockets with cable collet, clamping type C (solder or crimp contacts)**

	Type	ø contact A (mm)	Cable stripping lengths (mm) M1 Solder L	S	T	Crimp L	S	T
TT	302/303/304	0.5	7.0	4	2.5	10.0	4	3.0
	305/306	0.35	7.0	4	2.5	–	–	–
0T	302/303	0.9	9.5	6	3.5	12.0	6	4.0
	304/305	0.7	9.5	6	3.5	12.0	6	4.0
	306/307/309[1)]	0.5	9.0	6	2.5	13.0	6	4.0
	312	0.35	9.0	6	2.5	–	–	–
1T	302/303	1.3	11.0	7	3.5	14.5	7	4.0
	304/305	0.9	11.0	7	3.0	14.5	7	4.0
	306/307/308	0.7	11.0	7	3.0	14.5	7	4.0
	310/314/316	0.5	13.0	7	2.5	–	–	–
2T	302	2.0	16.5	8	4.0	19.5	8	5.5
	303	1.6	16.5	8	3.5	19.5	8	5.5
	304/305/306/307	1.3	15.5	8	3.5	17.5	8	4.0
	308/310	0.9	14.5	8	3.0	17.5	8	4.0
	312/314/316/318/319	0.7	14.5	8	3.0	17.5	8	4.0
	326/332	0.5	14.5	8	2.5	–	–	–
3T	302	3.0	19.0	10	4.5	23.0	10	5.5
	303/304	2.0	18.0	10	4.0	22.0	10	5.5
	305/306/307	1.6	18.0	10	3.5	22.0	10	5.5
	308/310	1.3	17.0	10	3.5	20.0	10	4.0
	309	1.3 2.0	17.0	10	3.5 4.0	20.0	10	4.0 5.5
	312/314/316/318	0.9	16.0	10	3.0	20.0	10	4.0
	320/322/324/326/330	0.7	16.0	10	3.0	20.0	10	4.0

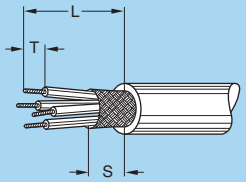

Note: [1)] crimp contacts are available only for connectors fitted with male contacts. The tolerances on these dim. are: L: ± 0.5 mm; S: ± 0.5 mm; T: ± 0.2 mm.

Cable stripping lengths for unipole connectors (S series)

M1 straight plugs and sockets with cable collet, clamping type C (solder contacts)

M3 elbow plugs (90°) with cable collet, clamping type C (solder contacts)

M5 straight plugs and sockets with cable crimping type E (crimp contacts)

M6 elbow plugs (90°) with cable crimping type E (crimp contacts)

	Type	ø contact A (mm)	Cable stripping lengths (mm)											
			M1			M5			M3			M6		
			Solder			Crimp			Solder			Crimp		
			L	S	T	L	S	T	L	S	T	L	S	T
00	113	1.3	9	4	4	19	5	7	7	4	2	17	5	7
0S	116	1.6	11	5	4	–	–	–	8	5	2	–	–	–
1S	120	2.0	13	8	5	–	–	–	13	8	2	–	–	–
	130	3.0	13	8	5	–	–	–	13	8	2	–	–	–
2S	130	3.0	18	9	6	–	–	–	15	9	2	–	–	–
	140	4.0	18	9	6	–	–	–	15	9	2	–	–	–
3S	140	4.0	21	9	7	–	–	–	19	9	2	–	–	–
	160	6.0	21	9	9	–	–	–	19	9	2	–	–	–
4S	140	4.0	25	9	7	–	–	–	23	9	2	–	–	–
	160	6.0	25	9	9	–	–	–	23	9	2	–	–	–
5S	112	12.0	12	15	12	–	–	–	–	–	–	–	–	–

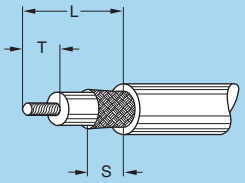

M2 straight plugs and sockets with oversize cable collet, clamping type K (solder contacts)

	Type	ø contact A (mm)	Cable stripping lengths (mm)		
			M2		
			Solder		
			L	S	T
00	113	1.3	16	4	4
0S	116	1.6	19	5	4
1S	120	2.0	25	8	5
	130	3.0	25	8	5
2S	130	3.0	34	9	6
	140	4.0	34	9	6
3S	140	4.0	39	9	7
	160	6.0	39	9	9
4S	140	4.0	50	9	7
	160	6.0	50	9	9

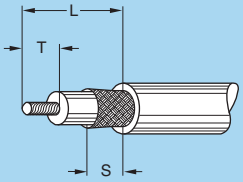

Cable stripping lengths for multipole connectors (S series)

M1 straight plugs and sockets with cable collet, clamping type C (solder or crimp contacts)

M3 elbow plugs (90°) with cable collet, clamping type C (solder or crimp contacts)

	Type	ø contact A (mm)	Cable stripping lengths (mm)											
			M1						M3					
			Solder			Crimp			Solder			Crimp		
			L	S	T	L	S	T	L	S	T	L	S	T
0S	302	0.9	10	5	3.5	15	5	4.0	10	5	3.5	15	5	4.0
	303/304	0.7	10	5	3.5	15	5	4.0	10	5	3.5	15	5	4.0
	306	0.5	10	5	2.5	–	–	–	10	5	2.5	–	–	–
1S	302	1.3	12	8	3.0	17	8	4.0	14	8	3.0	17	8	4.0
	303/304	0.9	12	8	3.0	17	8	4.0	14	8	3.0	17	8	4.0
	305	0.9 0.7	12	8	3.0 2.5	17	8	4.0	14	8	3.0 2.5	17	8	4.0
	306	0.7	12	8	2.5	17	8	4.0	14	8	2.5	17	8	4.0
2S	302	1.6	18	9	4.5	22	9	5.5	18	9	4.5	22	9	5.5
	303/304/305/306	1.3	18	9	4.0	22	9	4.0	18	9	4.0	22	9	4.0
	307	1.3 0.9	18	9	4.0	22	9	4.0	18	9	4.0	22	9	4.0
	308/310	0.9	18	9	4.0	22	9	4.0	18	9	4.0	22	9	4.0
3S	302/303/304	2.0	21	9	5.0	–	–	–	–	–	–	–	–	–
	305	2.0 1.3	21	9	5.0 4.0	–	–	–	–	–	–	–	–	–
	306/307/308/310	1.3	21	9	4.0	–	–	–	–	–	–	–	–	–
	312/313/314/316/318	0.9	21	9	4.0	–	–	–	–	–	–	–	–	–
4S	302	4.0	25	9	7.0	–	–	–	–	–	–	–	–	–
	303/304	3.0	25	9	6.0	–	–	–	–	–	–	–	–	–
	305	3.0 2.0	25	9	6.0 5.0	–	–	–	–	–	–	–	–	–
	306	2.0	25	9	5.0	–	–	–	–	–	–	–	–	–
	307	2.0 1.3	25	9	5.0 4.0	–	–	–	–	–	–	–	–	–
	308/309/310/312/313/314	1.3	25	9	4.0	–	–	–	–	–	–	–	–	–
	316/318/320/322/324	0.9	25	9	4.0	–	–	–	–	–	–	–	–	–

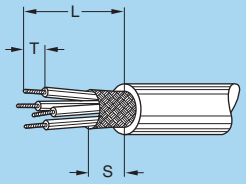

Cable stripping lengths for multipole connectors (S series)

M1 **straight plugs and sockets with cable collet, clamping type C (solder contacts)**

M3 **elbow plugs (90°) with cable collet, clamping type C (solder contacts)**

	Type	ø contact A (mm)	Cable stripping lengths (mm)					
			M1			M3		
			Solder			Solder		
			L	S	T	L	S	T
5S	302	6.0	35	22	9.0	35	22	9.0
	303	6.0 4.0	35	22	9.0 7.0	35	22	9.0 7.0
	304	4.0	35	22	7.0	35	22	7.0
	305	4.0 3.0	35	22	7.0 6.0	35	22	7.0 6.0
	306/308	3.0	35	22	6.0	35	22	6.0
	310/312/316	2.0	35	22	7.0	35	22	7.0
	314	3.0 2.0	35	22	6.0 7.0	35	22	6.0 7.0
	318/322	3.0 1.6	35	22	6.0 4.5	35	22	6.0 4.5
	320/324	1.6	35	22	4.5	35	22	4.5
	330/336/340/344/348	1.3	35	22	4.0	35	22	4.0
6S	304	8.0	37	15	10.0	37	15	10.0
	312/318	4.0	37	15	7.0	37	15	7.0
	320/324	3.0	37	15	6.0	37	15	6.0
	330/336/348	2.0	37	15	7.0	37	15	7.0
	360	1.6	37	15	4.5	37	15	4.5
	364/372	1.3	37	15	4.0	37	15	4.0
	106	0.9	37	15	4.0	37	15	4.0

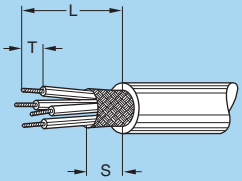

M4 **straight plug with cable collet, clamping type D or M (solder or crimp contacts)**

	Type	ø contact A (mm)	Cable stripping lengths (mm)					
			M4					
			Solder			Crimp		
			L	S	T	L	S	T
2S	302	1.6	48	9	4.5	52	9	5.5
	303/304/305/306	1.3	48	9	4.0	52	9	4.0
	307	1.3 0.9	48	9	4.0	52	9	4.0
	308/310	0.7	48	9	4.0	52	9	4.0

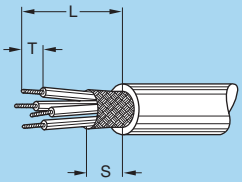

Cable stripping lengths for multipole connectors (S series)

M2 straight plugs and sockets with oversize cable collet, clamping type K (solder or crimp contacts)

	Type	ø contact A (mm)	Cable stripping lengths (mm) M2					
			Solder			Crimp		
			L	S	T	L	S	T
0S	302	0.9	19	5	3.0	23	5	4.0
	303/304	0.7	19	5	2.5	23	5	4.0
	306	0.5	19	5	2.5	–	–	–
1S	302	1.3	24	8	3.0	28	8	4.0
	303/304	0.9	24	8	3.0	28	8	4.0
	305	0.9 0.7	24	8	3.0 2.5	28	8	4.0
	306	0.7	24	8	2.5	28	8	4.0
2S	302	1.6	34	9	4.5	38	9	5.5
	303/304/305/306	1.3	34	9	4.0	38	9	4.0
	307	1.3 0.9	34	9	4.0	38	9	4.0
	308/310	0.9	34	9	4.0	38	9	4.0
3S	302/303/304	2.0	39	9	5.0	–	–	–
	305	2.0 1.3	39	9	5.0 4.0	–	–	–
	306/307/308/310	1.3	39	9	4.0	–	–	–
	312/313/314/316/318	0.9	39	9	4.0	–	–	–
4S	302	4.0	50	9	7.0	–	–	–
	303/304	3.0	50	9	6.0	–	–	–
	305	3.0 2.0	50	9	6.0 5.0	–	–	–
	306	2.0	50	9	5.0	–	–	–
	307	2.0 1.3	50	9	5.0 4.0	–	–	–
	308/309/310/312/313/314	1.3	50	9	4.0	–	–	–
	316/318/320/322/324	0.9	50	9	4.0	–	–	–
5S	302	6.0	70	22	9.0	–	–	–
	303	6.0 4.0	70	22	9.0 7.0	–	–	–
	304	4.0	70	22	7.0	–	–	–
	305	4.0 3.0	70	22	7.0 6.0	–	–	–
	306/308	3.0	70	22	6.0	–	–	–
	310/312/316	2.0	70	22	7.0	–	–	–
	314	3.0 2.0	70	22	6.0 7.0	–	–	–
	318/322	3.0 1.6	70	22	6.0 4.5	–	–	–
	320/324	1.6	70	22	4.5	–	–	–
	330/336/340/344/348	1.3	70	22	4.0	–	–	–

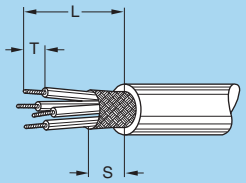

Cable stripping lengths for unipole connectors (E series)

M1 **straight plugs and sockets with cable collet, clamping type C (solder contacts)**

M3 **elbow plugs (90°) with cable collet, clamping type C (solder contacts)**

	Type	ø contact A (mm)	Cable stripping lengths (mm) M1 Solder L	S	T	M3 Solder L	S	T
0E	116	1.6	9	5	4	20	5	4
1E	120	2.0	12	8	5	25	8	5
	130	3.0	13	8	5	25	8	5
2E	130	3.0	16	9	6	33	9	6
	140	4.0	15	9	6	33	9	6
3E	140	4.0	19	9	7	40	9	7
	160	6.0	20	9	9	40	9	9
4E	160	6.0	23	9	9	50	9	9
5E	112	12.0	12	15	12	–	–	–

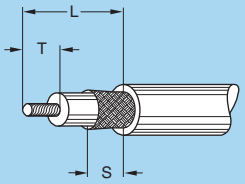

M2 **straight plugs and sockets with oversize cable collet, clamping type K (solder contacts)**

	Type	ø contact A (mm)	Cable stripping lengths (mm) M2 Solder L	S	T
1E	120	2.0	25	8	5
	130	3.0	26	8	5
2E	130	3.0	28	9	6
	140	4.0	27	9	6
3E	140	4.0	36	9	7
	160	6.0	37	9	9
4E	160	6.0	50	9	9

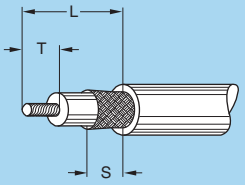

Cable stripping lengths for multipole connectors (E series)

M1 straight plugs and sockets with cable collet, clamping type C (solder or crimp contacts)

M3 elbow plugs (90°) with cable collet, clamping type C (solder or crimp contacts)

	Type	ø contact A (mm)	Cable stripping lengths (mm)											
			M1						M3					
			Solder			Crimp			Solder			Crimp		
			L	S	T	L	S	T	L	S	T	L	S	T
0E	302	0.9	9	4	3.5	12	5	4.0	19	5	3.0	23	5	4.0
	303/304	0.7	9	4	3.5	12	5	4.0	19	5	2.5	23	5	4.0
	306	0.5	8	4	2.5	–	–	–	19	5	2.5	–	–	–
1E	302	1.3	11	6	4.0	15	8	4.0	23	8	3.0	28	8	4.0
	303/304	0.9	11	6	3.5	15	8	4.0	23	8	3.0	28	8	4.0
	305	0.9 0.7	11	6	3.5	15	8	4.0	23	8	3.0 2.5	28	8	4.0
	306	0.7	11	6	3.5	15	8	4.0	23	8	2.5	28	8	4.0
2E	302	1.6	15	9	4.5	19	9	5.5	33	9	4.5	37	9	5.5
	303/304/305/306	1.3	15	9	4.0	19	9	4.0	33	9	4.0	37	9	4.0
	307	1.3 0.9	15	9	4.0	19	9	4.0	33	9	4.0	37	9	4.0
	308/310	0.9	15	9	4.0	19	9	4.0	33	9	4.0	37	9	4.0
3E	302/303/304	2.0	18	9	5.0	–	–	–	39	9	5.0	–	–	–
	305	2.0 1.3	18	9	5.0 4.0	–	–	–	39	9	5.0 4.0	–	–	–
	306/307/308/310	1.3	18	9	4.0	–	–	–	39	9	4.0	–	–	–
	312/313/314/316/318	0.9	18	9	4.0	–	–	–	39	9	4.0	–	–	–
4E	302	4.0	23	9	7.0	–	–	–	50	9	7.0	–	–	–
	303/304	3.0	23	9	6.0	–	–	–	50	9	6.0	–	–	–
	305	3.0 2.0	23	9	6.0 5.0	–	–	–	50	9	6.0 5.0	–	–	–
	306	2.0	23	9	5.0	–	–	–	50	9	5.0	–	–	–
	307	2.0 1.3	23	9	5.0 4.0	–	–	–	50	9	5.0 4.0	–	–	–
	308/309/310/312/313/314	1.3	23	9	4.0	–	–	–	50	9	4.0	–	–	–
	316/318/320/322/324	0.9	23	9	4.0	–	–	–	50	9	4.0	–	–	–
5E	302	6.0	48	15	9.0	–	–	–	–	–	–	–	–	–
	303	6.0 4.0	48	15	9.0 7.0	–	–	–	–	–	–	–	–	–
	304	4.0	48	15	7.0	–	–	–	–	–	–	–	–	–
	305	4.0 3.0	48	15	7.0 6.0	–	–	–	–	–	–	–	–	–
	306/308	3.0	48	15	6.0	–	–	–	–	–	–	–	–	–
	310/312/316	2.0	48	15	7.0	–	–	–	–	–	–	–	–	–
	314	3.0 2.0	48	15	6.0 7.0	–	–	–	–	–	–	–	–	–
	318/322	3.0 1.6	48	15	6.0 4.5	–	–	–	–	–	–	–	–	–
	320/324	1.6	48	15	4.5	–	–	–	–	–	–	–	–	–
	330/336/340/344/348	1.3	48	15	4.0	–	–	–	–	–	–	–	–	–

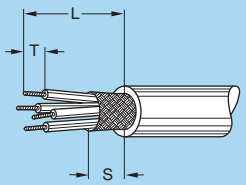

Cable stripping lengths for multipole connectors (E series)

M1 **straight plugs and sockets with cable collet, clamping type C (solder contacts)**

M3 **elbow plugs (90°) with cable collet, clamping type C (solder contacts)**

	Type	ø contact A (mm)	Cable stripping lengths (mm)					
			M1			M3		
			Solder			Solder		
			L	S	T	L	S	T
6E	303	6.0	70	30	9.0	–	–	–
	304	8.0	70	30	10.0	–	–	–
	312	5.0	70	30	8.0	–	–	–
	316/320/324	3.0	70	30	6.0	–	–	–
	330/332/340/348	2.0	70	30	7.0	–	–	–
	336	1.3 5.0	70	30	4.0 8.0	–	–	–
	360/362	1.6	70	30	4.5	–	–	–
	364/372	1.3	70	30	4.0	–	–	–
	106	0.9	70	30	4.0	–	–	–

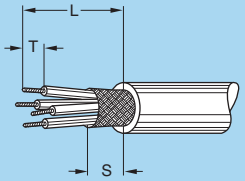

M2 **straight plugs and sockets with oversize cable collet, clamping type K (solder or crimp contacts)**

	Type	ø contact A (mm)	Cable stripping lengths (mm)					
			M2					
			Solder			Crimp		
			L	S	T	L	S	T
1E	302	1.3	23	8	3.0	28	8	4.0
	303/304	0.9	23	8	3.0	28	8	4.0
	305	0.9 0.7	23	8	3.0 2.5	28	8	4.0
	306	0.7	23	8	2.5	28	8	4.0
2E	302	1.6	27	9	4.5	31	9	5.5
	303/304/305/306	1.3	27	9	4.0	31	9	4.0
	307	1.3 0.9	27	9	4.0	31	9	4.0
	308/310	0.9	27	9	4.0	31	9	4.0
3E	302/303/304	2.0	35	9	5.0	–	–	–
	305	2.0 1.3	35	9	5.0 4.0	–	–	–
	306/307/308/310	1.3	35	9	4.0	–	–	–
	312/313/314/316/318	0.9	35	9	4.0	–	–	–
4E	302	4.0	50	9	7.0	–	–	–
	303/304	3.0	50	9	6.0	–	–	–
	305	3.0 2.0	50	9	6.0 5.0	–	–	–
	306	2.0	50	9	5.0	–	–	–
	307	2.0 1.3	50	9	5.0 4.0	–	–	–
	308/309/310/312/313/314	1.3	50	9	4.0	–	–	–
	316/318/320/322/324	0.9	50	9	4.0	–	–	–

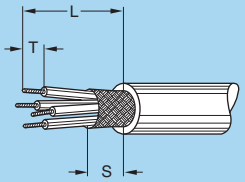

Cable stripping lengths for multipole connectors (L series)

M1 straight plugs and sockets with cable collet, clamping type C (solder or crimp contacts)

M3 elbow plugs (90°) with cable collet, clamping type C (solder or crimp contacts)

	Type	ø contact A (mm)	Cable stripping lengths (mm)											
			M1						M3					
			Solder			Crimp			Solder			Crimp		
			L	S	T	L	S	T	L	S	T	L	S	T
0L	302	0.9	10.5	6	3.0	12.0	6	4.0	23.5	6	3.0	25.0	6	4.0
	303/304	0.7	10.5	6	2.5	12.0	6	4.0	23.5	6	2.5	25.0	6	4.0
1L	302	1.3	12.5	7	3.0	14.5	7	4.0	29.0	7	3.0	31.0	7	4.0
	303/304	0.9	12.5	7	3.0	14.5	7	4.0	29.0	7	3.0	31.0	7	4.0
	305	0.9 0.7	12.5	7	3.0 2.5	14.5	7	4.0	29.0	7	3.0 2.5	31.0	7	4.0
	306	0.7	12.5	7	2.5	14.5	7	4.0	29.0	7	2.5	31.0	7	4.0
2L	302	1.6	18.0	8	4.5	19.5	8	5.5	37.5	8	4.5	39.0	8	5.5
	303/304/305/306	1.3	17.0	8	4.0	17.5	8	4.0	36.5	8	4.0	37.0	8	4.0
	307	1.3 0.9	17.0 16.0	8	4.0	17.5	8	4.0	36.5 35.5	8	4.0	37.0	8	4.0
	308/310	0.9	16.0	8	4.0	17.5	8	4.0	35.5	8	4.0	37.0	8	4.0

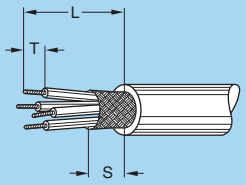

M2 straight plugs and sockets with oversize cable collet, clamping type K (solder or crimp contacts)

	Type	ø contact A (mm)	Cable stripping lengths (mm)					
			M2					
			Solder			Crimp		
			L	S	T	L	S	T
1L	302	1.3	26.5	8	3.0	28.5	8	4.0
	303/304	0.9	26.5	8	3.0	28.5	8	4.0
	305	0.9 0.7	26.5	8	3.0 2.5	28.5	8	4.0
	306	0.7	26.5	8	2.5	28.5	8	4.0
2L	302	1.6	31.0	10	4.5	32.5	10	5.5
	303/304/305/306	1.3	30.0	10	4.0	30.5	10	4.0
	307	1.3 0.9	30.0 29.0	10	4.0	30.5	10	4.0
	308/310	0.9	29.0	10	4.0	30.5	10	4.0

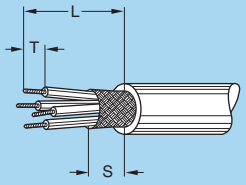

Technical characteristics

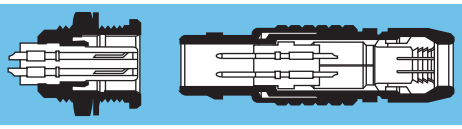

Outer shell

Brass

In most cases, LEMO connectors have a brass outer shell which is suitable for most general purpose applications, including civilian and military. The brass outer shells have a chrome nickel-plated surface which ensures very good protection against industrial atmosphere, salt air and most corrosive agents.

Alternative protective coatings are available to satisfy other specific environmental conditions:
– electrolytic nickel
– nickel-gold
– nickel-black chrome. After the black chrome treatment, the part is coated with non conductive protective organic film.

Stainless steel

For applications where there are severe environmental conditions that may rapidly damage the surface finish, we recommend using stainless steel. The AISI 303 stainless steel is a material for general use adapted to most applications requiring a product made entirely of stainless metal.

For the nuclear industry where elements are subject to radiation and to vaporous nitric acid, we offer AISI 304 stainless steel.

Grade AISI 316L is recommended for medical applications, highly demanding with regard to non-corrosiveness. This material is also used for connector shells soldered by electronic beam onto a device made of the same stainless steel. These parts have no surface treatment.

Aluminium alloy

The aluminium alloy outer shells find numerous applications where light weight is a predominant factor; such as in the aeronautics and space industries, and for portable and mobile equipment.
These materials have high mechanical strength and excellent resistance to corrosion. The shell surface is protected by anodizing which is available in six colours: blue, yellow, black, red, green, and natural.

Plastic materials

Some connector model shells can be made of plastic. This solution offers optimum electrical insulating properties particularly suitable for medical applications. Black Polyoxymethylene (POM) is particularly adapted to products of the 00 or S series.
Grey or white polysulfone (PSU) and beige PEEK offers excellent mechanical properties and is suitable for gas or vapour sterilization.
Some models of the 2B and 3B series are available with an outer shell of cream-coloured polyphenylsulfone (PPSU). We recommend this material particularly for applications where products are to withstand hundreds of vapour sterilization cycles.

Bridge plug or plugs with parallel sockets are made of polyamide (PA.6) available in 9 colours: blue, white, grey, yellow, brown, black, red, orange and green.

Some elbow socket shells for printed circuits are overmoulded in polyphenilene sulfide (PPS).

Other metallic components

In general, most metallic components are manufactured in brass. However, bronze or beryllium copper are used where good elasticity is required (for example: earthing crown). Depending on the application, these parts have electrolytic nickel or nickel-gold plating.
These parts can also be manufactured in stainless steel.

Sealing gasket

In general, sealing gaskets are made of silicone rubber MQ/MVQ. However, for vacuumtight sockets and couplers, gaskets are made of fluorosilicone rubber (FPM).

Sealing resin

An epoxy resin is used to seal both watertight and vacuumtight socket and coupler models.

Materials and Treatments

Component	Material (Standard)	Surface treatment (µm)										Notes
		chrome			nickel		gold			black chr.		
		Cu	Ni	Cr	Cu	Ni	Cu	Ni	Au	Ni	Cr	
Outer shell, collet nut, conical nut or notched nut and oversized collet	Brass (UNS C 38500)	0.5	3	0.3	0.5	3	0.5	3	0.5	1	2	
	Stainless steel (AISI 303, 304 or 316L)	without treatment										
	Aluminium alloy (AA 6262A or AA 6023)	–	–	–	–	5	–	–	–	–	–	1)
	Aluminium alloy (AA 6262A or AA 6023)	anodized										
	POM (Delrin® or Ertacetal®), Polyoxymethylene, black	–										2)
	PEEK, Polyether ethercetone, beige	–										3)
	PSU (Udel®), Polysulfone, grey or white	–										4)
	PPSU (Radel®), Polyphenylsulfone, cream	–										4)
	PA.6 (Grilon®), Polyamid	–										5)
	PPS (Ryton®), Polyphenilene sulfide, brown	–										6)
Earthing crown	Bronze (UNS C 54400) or special brass	–	–	–	0.5	3	0.5	3	1.0	–	–	7)
	Beryllium Copper (UNS C 17300)	–	–	–	0.5	3	0.5	3	1.0	–	–	8)
	Stainless steel (AISI 416 or 316L)	without treatment										9)
Latch sleeve	Special brass	0.5	3	0.3	0.5	3	0.5	3	0.5	–	–	
	Stainless steel (AISI 416 or 316L)	without treatment										9)
Locking washer	Bronze (UNS C 52100)	–	–	–	0.5	3	0.5	3	0.5	–	–	
Hexagonal or round nut	Brass (UNS C 38500)	–	–	–	0.5	3	0.5	3	0.5	–	–	
	Stainless steel (AISI 303, 304 or 316L)	without treatment										10)
	Aluminium alloy (AA 6262A or AA 6023)	anodized natural										10)
Other metallic components	Brass (UNS C 38500)	–	–	–	0.5	3	0.5	3	0.5	–	–	
	Stainless steel (AISI 303, 304 or 316L)	without treatment										
O-ring and gaskets	Silicone MQ/MVQ or FPM/FKM (Viton®)	–										11)
Sealing resin	Epoxy (Araldite® or Stycast®)	–										

Notes: standards for surface treatment are as follows:
– chrome-plated: SAE AMS 2460
– nickel-plated: SAE AMS QQ N 290, or MIL DTL 32119
– gold-plated: ISO 27874
– black chrome: MIL DTL 14538 with a minimum of 10 µm of lacquer protection
1) anthracite colour (other colours upon request)
2) for FFP, PCP and ERN models of the 0S to 3S series
3) for FFP, PCP and ERN models of the 0S to 3S series and FGG and ENG models of the 1B, 3B and 4B series
4) for the FGY and ENY models of the 2B and 3B series
5) for bridge plugs of the B series
6) for S and B series elbow sockets for printed circuits
7) gold-plating for unipole types
8) used in 00 series free and fixed sockets and couplers
9) AISI 416 steel is used with shells made of AISI 303 or 304
10) delivered with free and fixed sockets with aluminium alloy or stainless steel shell
11) FPM/FKM (Viton®) o-ring and gaskets are installed upon special request. However standard for vacuumtight models.

Technical characteristics of plastic materials

Type	Standard	Units	POM	PEEK	PSU	PPSU	PPS	PA.6	Silicone	FPM	Epoxy
Density	ASTM D 792	–	1.4	1.3-1.4	1.24	1.3	1.67	1.14	~1.2	~1.9	1.58
Tensile strength (at 23°C)	ASTM D 638/ ISO R527	MPa	70-80	92-142	70	70	121	55	> 9	> 12	16
Flexurale strength (at 23°C)	ASTM D 790/ ISO R178	MPA	–	170	106	91	179	75	–	–	24
Dielectric strength	ASTM D 149/IEC 60243	kV/mm	60	19-25	17-20	15	17	35	18-30	–	15
Volume resis. at 50% HR and 23°C	ASTM D 257/IEC 60093	Ω • cm	10^{15}	10^{16}	$5x10^{16}$	–	10^{16}	10^{15}	10^{14}	–	10^{14}
Surface resistivity	ASTM D 257	Ω	10^{13}	10^{15}	–	–	–	–	–	–	–
Thermal conductivity	ASTM C 177	W/K • m	0.31	0.25	0.26	–	0.3	–	–	–	0.8
Comparative tracking index	IEC 60112	V	CTI 600	CTI 150	CTI 150	–	CTI 200	CTI 600	–	–	CTI>600
Maxi. continuous service temperature	UL 746	°C	90	250	140	180	220	80	200	200	80
Min. continuous service temperature	UL 746	°C	-50	-55	-60	-50	-60	-40	-50	-20	-20
Max. short-time service temperature	–	°C	140	300	160	200	250	150	> 250	300	120
Water absorption in 24h at 23°C	ASTM D 570/ISO R62A	%	0.85	0.12	0.3	0.37	< 0.05	> 3	–	–	0.25
Radiation resistance	–	Gy[1)]	$8x10^{3}$	10^{7}	10^{5}	–	$> 10^{7}$	$5x10^{3}$	10^{5}	$8x10^{4}$	$2x10^{6}$
Flammability rating	ASTM D 635/UL 94[2)]	–	HB	V-0/3.2	V-0/4.4	V-0/1.6	V-0/5V	V-2	–	–	V-0/4
Resistance to steam sterilization	–	–	bad	excel.	good	excel.	excel.	bad	good	good	bad

Notes: [1)] 1 Gy (Gray) = 100 rad. [2)] Depends on material thickness (in mm).

ASTM = American Society for Testing Material
ISO = International Standards Organisation
UL = Underwriters Laboratories
IEC = International Electrotechnical Commission

Mechanical latching characteristics

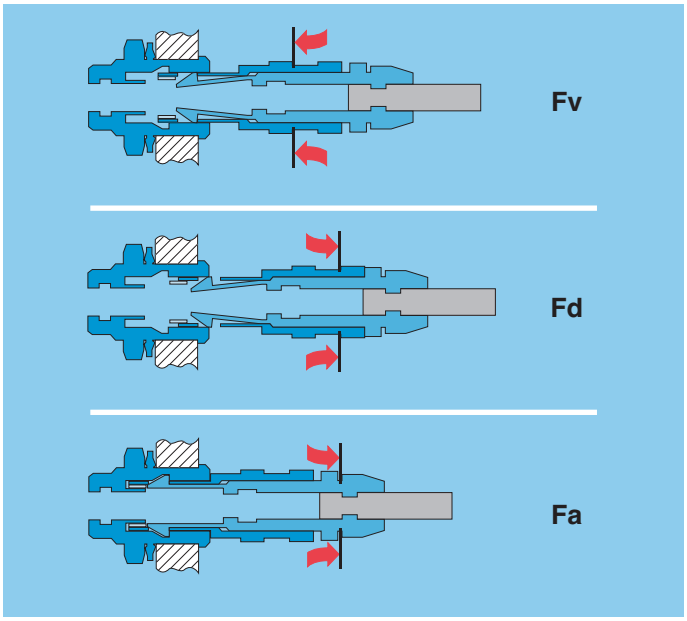

F_v: average latching force.

F_d: average unmating force with axial pull on the outer shell.

F_a: average pull force with axial pull on the collet nut

Notes: forces were measured on outer shells **not fitted with contacts**.
Mechanical endurance: 5000 cycles (3000 cycles for T series).
The values were measured according to the standard IEC 60512-7 test 13a.

1N = 0.102 kg.

Standard series

Force (N)	Series								
	00	0S	1S	2C	2S	3S	4S	5S	6S
Fv	9	14	15	12	17	20	40	60	70
Fd	7	9	10	12	11	14	25	40	55
Fa	120	140	250	400	350	500	650	750	900

Watertight series

Force (N)	Series									
	0E	0L	1E	1L	2E	2L	3E	4E	5E	6E
Fv	14	14	16	16	20	20	32	65	85	100
Fd	9	9	10	10	13	13	25	40	60	75
Fa	250	250	300	300	400	400	550	700	800	900

Keyed series

Force (N)	Series							
	00	0B	1B	2B	2G	3B	4B	5B
Fv	9	10	14	15	12	17	39	48
Fd	7	8	11	12	12	14	38	38
Fa	100	180	300	300	400	400	600	800

Keyed watertight series

Force (N)	Series										
	TT	0K	0T	1K	1T	2K	2T	3K	3T	4K	5K
Fv	14	14	15	16	16	20	20	32	28	65	85
Fd	12	9	13	10	14	13	15	25	24	40	60
Fa	80	250	130	300	250	400	250	550	400	700	800

Electromagnetic compatibility (EMC) and shielding efficiency

The electromagnetic compatibility of a device can only be ensured by meeting a number of basic rules with the design of the device and by carefully selecting components, cables and connectors.

Electrical and electronic devices are to be designed to ensure the following:

a) reduce the emission of generated electromagnetic disturbance to a level where radios and telecommunication and other devices can properly function;
b) electromagnetic immunity against electromagnetic disturbance so that they can properly function.

When selecting a connector, screen or shielding efficiency and low resistance to electric continuity between the cable and the connector should be considered.

The design of LEMO connectors with metal shell and earthing crown guarantee optimum shielding efficiency in all applications where electromagnetic compatibility (EMC) is critical. The performance of a connector is measured through shielding efficiency, a value that represents the ratio between the electromagnetic field on the outside and the inside of the shell. Our measurements are carried out according to the IEC 60169-1-3 standard.

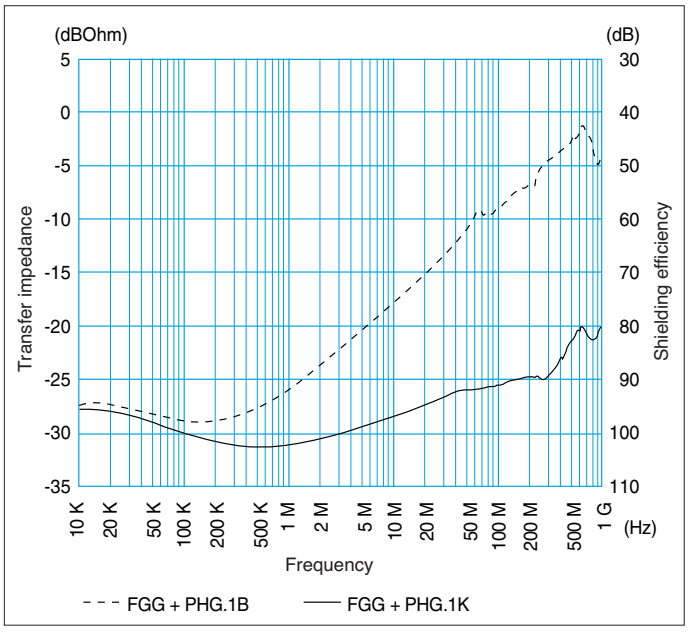

The performance of S and B series connectors is comparable to the results of measurements carried out on a pair of FGG + PHG.1B connectors.
The performance of E and K series connectors is comparable to the results of measurements carried out on a pair of FGG + PHG.1K connectors.

Shell electrical continuity:
(measured according to IEC 60512-2 test 2f)

Test current: 1A
A = Ammeter
mV = Millivoltmeter
G = Generator

R_1 Values with earthing crown and latch sleeve or inner-sleeve nickel-plated.

R_2 Values with gold-plated earthing crown and nickel-plated latch sleeve or inner sleeve.

Standard series

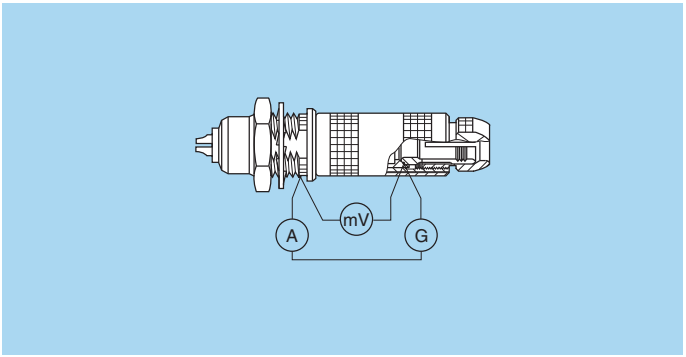

Series	R_1 (mΩ)	R_2 (mΩ)
00	3.5	2.8
0S	2.8	1.6
1S	2.2	1.5
2C	–	–

Series	R_1 (mΩ)	R_2 (mΩ)
2S	1.8	1.2
3S	1.6	1.2
4S	1.4	1.0
5S	1.4	1.0
6S	1.0	0.5

Keyed series

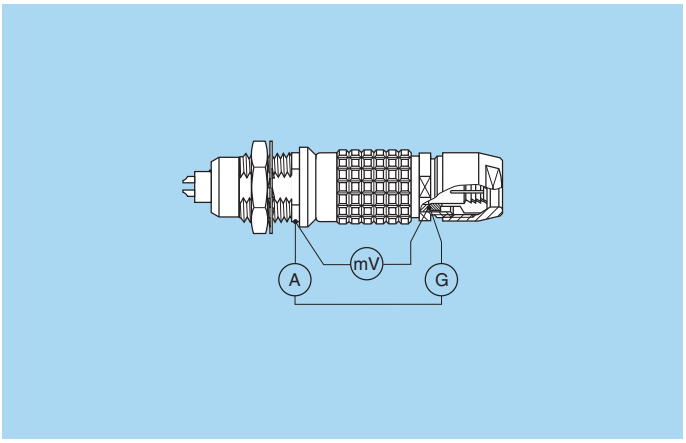

Series	R_1 (mΩ)	R_2 (mΩ)
00	3.5	2.8
0B	3.5	1.3
1B	2.5	1.1
XB	2.5	1.1
2B	2.2	0.9
2G	–	–
3B	2.2	0.7
4B	1.5	0.5
5B	1.5	0.3

Series	R_1 (mΩ)
TT	3.5
0T	3.5
1T	2.5
2T	2.2
3T	2.2
4T	1.5
5T	1.5

Watertight series
Keyed watertight series

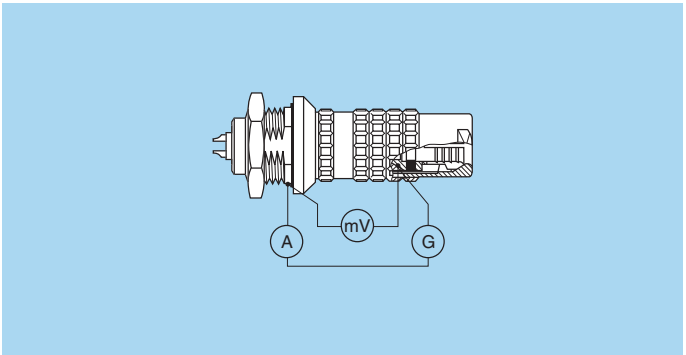

Series	R_1 (mΩ)	R_2 (mΩ)
0E-0K-0L	2.8	1.6
1E-1K-1L	2.2	1.5
2E-2K-2L	1.8	1.2
3E-3K	1.6	1.2
4E-4K	1.4	1.0
5E-5K	1.4	1.0
6E	1.0	0.5

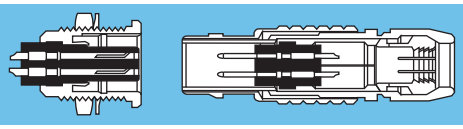

Insulator

Plastic material used by LEMO for manufacturing insulators is selected according to the electric and thermal properties required for the various connector types.
Characteristics examined for the two connector types are:
Dielectric strength, Comparative tracking index,
Surface and volume resistivity, Radiation resistance,
Continuous service temperature, Water absorption,
Flammability rating, Resistance to hydrocarbon.

Mechanical and Electrical Properties

Mechanical characteristics of thermoplastics, such as PA 6.6, and PEEK, are improved by the addition of glass fibres. By adding glass fibres in the resin the performance of this material (mechanical strength and radiation resistance) is enhanced and water absorption rate is reduced. From an electric point of view, the addition of glass fibres improves dielectric strength.

Selection of the insulator

A number of thermoplastics have common characteristics, some of them are identical with other insulating materials. In this case, the insulator material is selected according to the specific difference in features to provide all the required parameters for the given type.

Radiation resistance

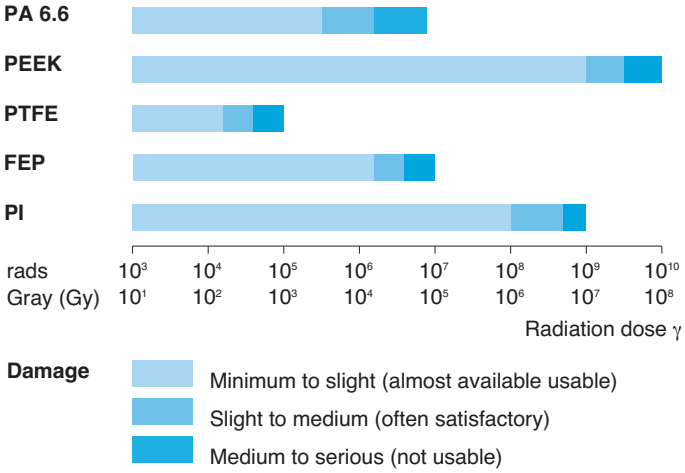

Note: technical data in this chapter provide general information on plastics used by LEMO as electrical insulators. LEMO reserves the right to propose new materials with better technical characteristics, and to withdraw, without notice, any material mentioned in the present catalogue or any other publications edited by LEMO S.A. and/or its subsidiaries. LEMO SA and its subsidiaries use only plastic granules, powder or bars supplied by specialized companies, and thus cannot in any case take responsibility with regard to this material.

Technical characteristics

Type	Standard	Units	PA6.6	PEEK	PTFE	FEP	PI
Dielectric strength	ASTM D 149 / IEC 60243	kV/mm	15-17	19-25	17.2-24	20	22
Volume resistivity at 50% RH and 23°C	ASTM D 257 / IEC 60093	Ω • cm	$5.8x10^{15}$	10^{16}	10^{18}	$> 10^{16}$	$> 10^{16}$
Surface resistivity	ASTM D 257 / IEC 60093	Ω	10^{12}	10^{15}	10^{17}	$> 10^{16}$	$> 10^{15}$
Thermal conductivity	ASTM C 177	W/K • m	0.21	0.25	0.23	0.24	0.35
Comparative tracking index	IEC 60112	V	CTI 600	CTI 150	CTI 500	–	–
Dielectric constant (10^6 Hz)	ASTM D 150 / IEC 60250	–	4	3.2-3.5	2-2.1	2.1	3.6
Dissipation factor (10^6 Hz)	ASTM D 150 / IEC 60250	–	–	< 0.005	< 0.0003	< 0.001	< 0.0034
Maximum continuous service temperature	UL 746	°C	120	250	260	200	350
Maximum short-time service temperature	–	°C	150	300	300	260	480
Minimum continuous service temperature	–	°C	–	-55	-200	-200	–
Water absorption in 24h at 23°C	ASTM D 570 / ISO R624	%	< 0.7	< 0.3	< 0.01	< 0.01	0.24
Radiation resistance	–	Gy	$5x10^3$	10^7	$2x10^2$	$2x10^4$	10^6
Flammability rating	ASTM D 635 / UL 94	–	–	V-0/3.2	V-0	V-0	–

Designation		Symbol	Standard	Unipole			Multipole							
chemical	commercial			00	S	E	00	S	E	B	K	T	2C	2G
Polyamide (glass fitted)	Nylatron®	PA 6.6	–					●	●					
Polyether Ethercetone	Peek®	PEEK	–	○	○	○	●	●	●	●	●	●	●	●
Polytetrafluorethylene	–	PTFE	ASTM D 1457-83	●	●	●								
Tetrafluorethylene	–	FEP	ASTM D 2116-81					○	○					
Polyimide	Vespel®	PI	–					○	○					

Note: values of insulation resistance between contacts are given on page 212. ● First choice alternative ○ Special order alternative

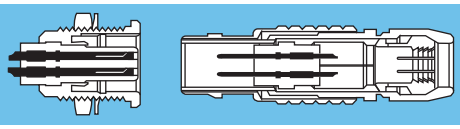

Electrical contact

Technical description

The secure reliable electromechanical connection achieved with LEMO female cylindrical contacts is mainly due to two important design features :

1. *Prod proof entry* on the mating side which ensures perfect concentric mating even with carelessly handled connectors.
2. *The pressure spring*, with good elasticity, maintains a constant even force on the male contact when mated. The leading edge of the pressure spring preserves the surface treatment (gold-plated) and prevents undue wear.

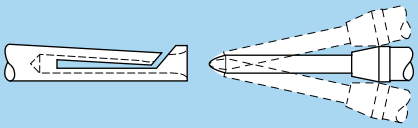

Contact material and treatment

LEMO female contacts are made of bronze beryllium (QQ-C-530) or bronze (UNS C 54400). These materials are chosen because of their high modulus of elasticity, their excellent electrical conductivity and a high mechanical strength.

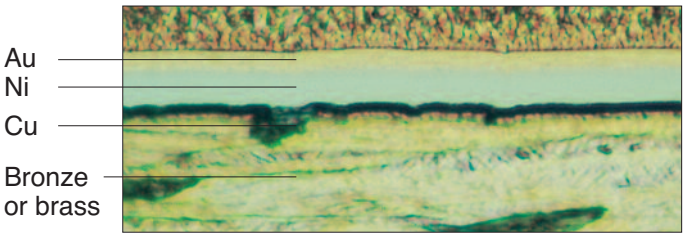

Notes: the standard surface treatment are as follows:
– nickel: SAE AMS QQ N 290 or MIL DTL 32119
– gold: ISO 27874.
1) minimum value
2) for elbow print contacts
3) treatment completed by 6 µm Sn (lead free) tin-plating

LEMO male solder and print contacts are made of brass (UNS C 38500). Male crimp contacts are made of brass (UNS C 34500) or annealed brass (UNS C 38500) with optimum hardness (HV) for crimping onto the wire.

Type	Material (standard)	Surf. treatment (µm)		
		Cu	Ni	Au[1]
Male crimp	Brass (UNS C 34500)	0.5	3	1.0
	Brass (UNS C 38500)	0.5	3	1.0
Male print	Brass (UNS C 38500)	0.5	3	1.0
Female crimp / print	Bronze (UNS C 54400) Cu-Be (FS QQ-C-530)	0.5	3	1.5
Clips	Cu-Be (FS QQ-C-530)	–	–	–
	Stainless steel	–	–	–
Connection wire[2]	Brass	–	3[3]	–

Thickness comparison between the outside and the inside of female contacts

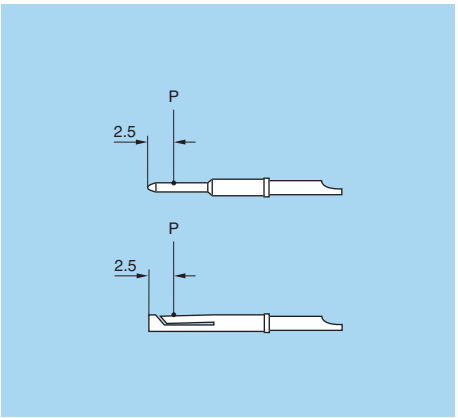

Note: P = inspection point

Contact ø A (mm)	Gold thickness		
	male (µm)	female	
		outside (µm)	inside (%)
0.35	1.0	1.5	65
0.50	1.0	1.5	65
0.70	1.0	1.5	70
0.90	1.0	1.5	75
1.30	1.0	1.5	75
1.60	1.0	1.5	75
2.00	1.0	1.5	75

Contact ø A (mm)	Gold thickness		
	male (µm)	female	
		outside (µm)	inside (%)
3.00	1.0	1.5	75
4.00	1.0	1.5	75
5.00	1.0	1.5	75
6.00	1.0	1.5	75
8.00	1.0	1.5	75
12.00[1]	–	–	–

Notes: 1) contacts are silver plated

Contact resistance with relation to the number of mating cyles

(measured according to IEC 60512-2 test 2a)

Average values measured after the mating cycles and the salt spray test according to IEC 60512-6 test 11f.

A ø (mm)	Contact resistance (mΩ)			A ø (mm)	Contact resistance (mΩ)		
	1000 cycles	3000 cycles	5000 cycles		1000 cycles	3000 cycles	5000 cycles
0.35	8.0	–	–	3.0	2.0	2.2	3.1
0.5	7.5	8.3	8.7	4.0	1.6	2.0	2.8
0.7	5.6	5.7	6.1	5.0	1.4	–	–
0.9	4.1	4.2	4.8	6.0	1.2	–	–
1.3	2.8	2.9	3.6	8.0	0.8	–	–
1.6	2.9	3.1	3.5	12.0	0.7	–	–
2.0	2.6	2.7	3.3				

Insulation resistance between the contacts and contact/shell

(measured according to IEC 60512-2 test 3a)

Insulating material	Multipole	Unipole
	PEEK	PTFE
new	> 10^{12} Ω	> 10^{12} Ω
after humidity test[1)]	> 10^{10} Ω	> 10^{10} Ω

Note: [1)] 21 days at 95% RH according to IEC 60068-2-3.

Solder contacts

The conductor bucket of these contacts is machined at an angle to form a cup into which the solder can flow.
See page 8 for the range of cable dimensions that can be soldered.

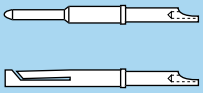

Crimp contacts

The square form crimp method is used (MIL-C-22520F, class I, type 2) photo 1 for unipole contacts.

For multipole contacts the standard four identer crimp method is used, MIL-C-22520F, class I, type 1), photo 2.
The crimp method requires a controlled compression to obtain a symmetrical deformation of the conductor strand and of the contact material. The radial hole in the side of the contact makes it possible to check whether the conductor is correctly positioned within the contact. A good crimping is characterized by only slightly reduced conductor section and practically no gap.
For optimum crimping of bronze or brass contacts they are annealed to relieve internal stress and reduce material hardening during the crimping process.
Only the crimping zone is annealed with the help of an induction heating machine designed by the LEMO Research and Development Department (see photo 3).

Advantages of crimping

- practical, quick contact fixing outside the insulator
- possible use at high temperature
- no risk of heating the insulator during the conductor-contact fixing
- high tensile strength

Crimp contacts are available in standard version (form 1) for mounting maximum size conductors.
For some dimensions, these crimp contacts can be produced with reduced crimp barrels (form 2) for mounting reduced size conductors.

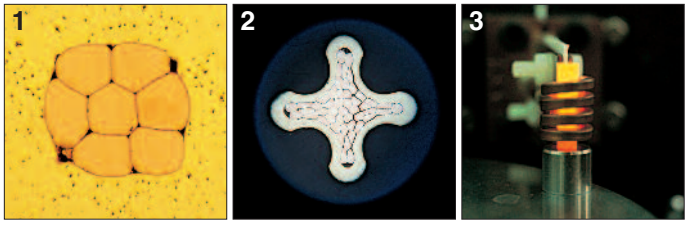

Crimp contacts

The crimp contacts can be with two forms: a standard crimp barrel for large conductors (see fig. 1) or with a reduced crimp barrel for smaller conductors (see fig. 2).

The range of cable dimensions that can be crimped into our contacts are indicated on the table on page 8.

Fig. 1

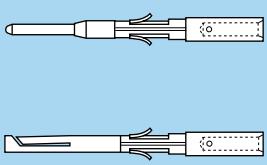

Fig. 2

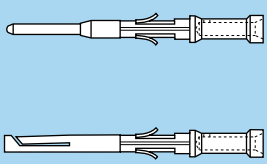

Print contacts

Print contacts are available in straight or elbow versions for certain connector types, mostly for straight and elbow socket models. Connection is made on flexible or rigid printed circuits by soldering.
Straight print contacts are gold-plated which guarantees optimum soldering, even after long-term storage. However for wave soldering, we recommend removal the gold-plating from the contact end on the printed circuit side before soldering according to the assembly procedures.
Print elbow contacts include a tinned lead free brass wire crimped into a crimp contact.

straight

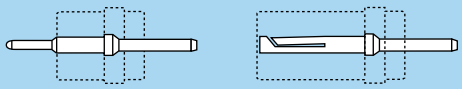

elbow

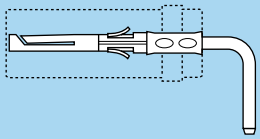

Test voltage

Test voltage (Ue) :
(measured according to the IEC 60512-2 test 4a standard)

It corresponds to 75% of the mean breakdown voltage.
Test voltage is applied at 500 V/s and the test duration is 1 minute.

This test has been carried out with a mated plug and socket, with power supply only on the plug end.

Operating voltage (Us) :
It is proposed according to the following ratio : $Us = \frac{Ue}{3}$

Caution:
For a number of applications, safety requirements for electrical appliances are more severe with regard to operating voltage.
In such cases operating voltage is defined according to creepage distance and air clearance) between live parts. Please consult us for the choice of a connector by indicating the safety standard to be met by the product.

Voltage values are given in the table on insulator types for each series.
They correspond with values measured at sea level. They are adapted to all applications up to an altitude of 2000 m.

In case a device is used at a higher altitude, air clearance between live parts has to be multiplied by the following coefficients.
It means also that test voltage has to be divided by this coefficient.

altitude (m)	coefficient
2000	1.00
3000	1.14
4000	1.29
5000	1.48

Rated current

(measured according to IEC 60512-3 test 5a)

The specified rated current can be applied simultaneously to all the contacts.
It corresponds with an average temperature rise of 40°C of the connector.

The current values are indicated in the table of insulator types in each series.
For use at higher temperatures acceptable rated current will be lower. It tends towards zero as the material is used at the maximum operating temperature accepted for the insulator.

In most case the current depend on the conductor dimension (see table on page 219) or on the printed circuit dimension.

Caution:
In general, connectors should not be unmated while live.

For connectors with PEEK insulator, maximum admissible current will follow the curve below depending on the operating temperature T.

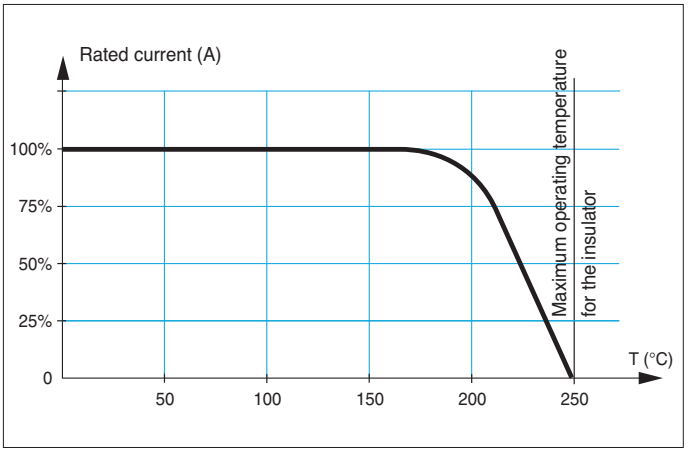

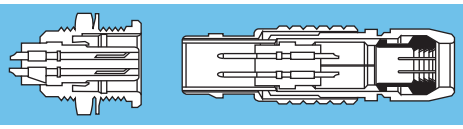

Cable fixing

Cables are fixed into LEMO connectors with cable collet systems. These collets with latches have a design which is very similar to those used for tool machines. This solution guarantees excellent cable retention and ensures perfectly symmetrical deformation of the cable.
The 00 multipole series is also available with hexagonal crimping (MIL-C-22520F).

Material and treatment

Component	Material (standard)	Surface treatment (µm)				
		Nickel[1]		Gold		
		Cu	Ni	Cu	Ni	Au
Center piece	Brass (UNS C 38500)	0.5	3	–	–	–
Collet	Brass (UNS C 38500)	0.5	3	–	–	–
Crimp ferrule	Copper (UNS C 18700)	0.5	3	0.5	3	0.5
Reducer	Brass (UNS C 38500)	0.5	3	–	–	–
Reducing cone	Brass (UNS C 38500)	0.5	3	–	–	–
Earthing cone	Brass (UNS C 38500)	0.5	3	–	–	–
Metal washer	Brass (UNS C 38500)	0.5	3	–	–	–
Gasket	Silicone MQ/MVQ	–				
	FPM (Viton®)[2]	–				

Notes:
[1] standards for surface treatment are as follows:
– nickel-plated: SAE AMS QQ N 290.
[2] available upon special request.

Cable clamping system

B series (D and M cable clamping)

See assembly instructions under www.lemo.com.

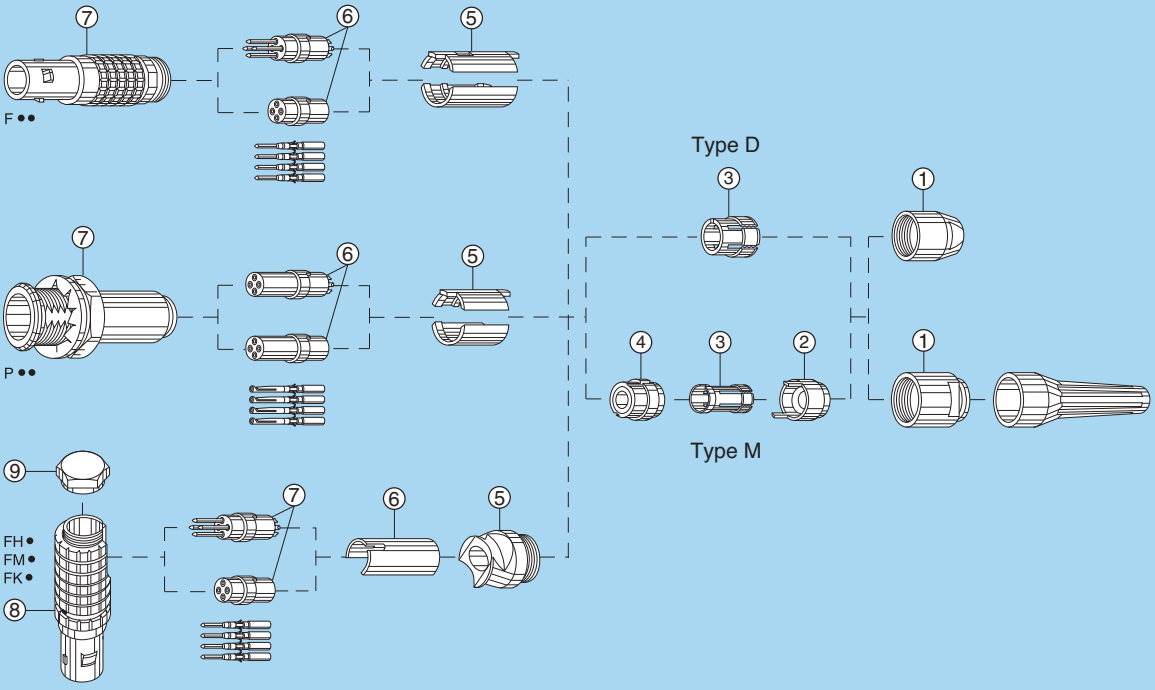

Plug and socket
① collet nut
② reducing cone
③ collet
④ reducer
⑤ split insert carriers
⑥ insulator + contacts
⑦ housing subassy.

Elbow plug
① collet nut
② reducing cone
③ collet
④ reducer
⑤ elbow outlet
⑥ insert carrier
⑦ insulator + contacts
⑧ housing subassy.
⑨ hex cap

K series (C and K cable clamping)

See assembly instructions under www.lemo.com.

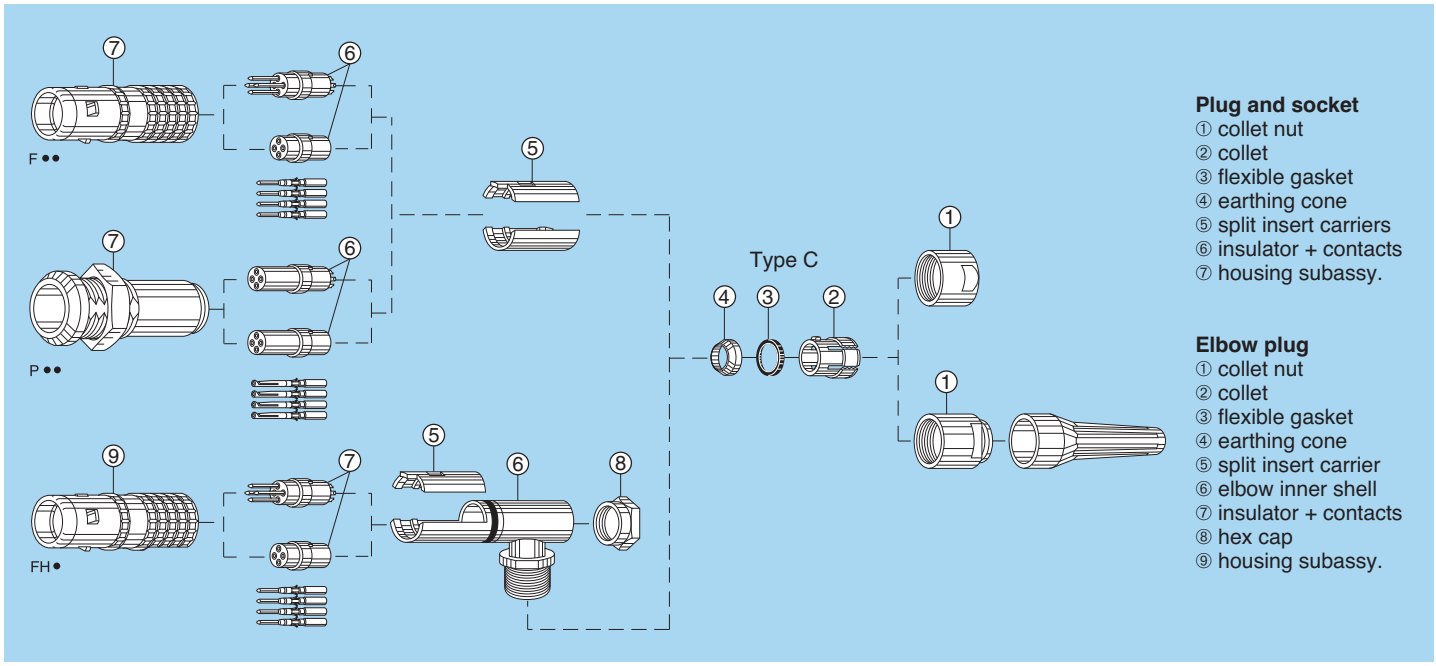

Plug and socket
① collet nut
② collet
③ flexible gasket
④ earthing cone
⑤ split insert carriers
⑥ insulator + contacts
⑦ housing subassy.

Elbow plug
① collet nut
② collet
③ flexible gasket
④ earthing cone
⑤ split insert carrier
⑥ elbow inner shell
⑦ insulator + contacts
⑧ hex cap
⑨ housing subassy.

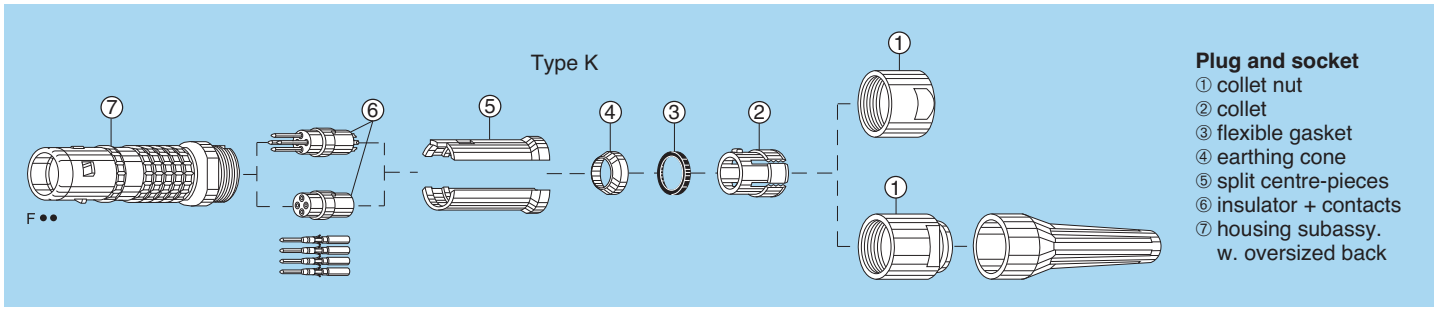

Plug and socket
① collet nut
② collet
③ flexible gasket
④ earthing cone
⑤ split centre-pieces
⑥ insulator + contacts
⑦ housing subassy.
w. oversized back

T series (C cable clamping)

See assembly instructions under www.lemo.com.

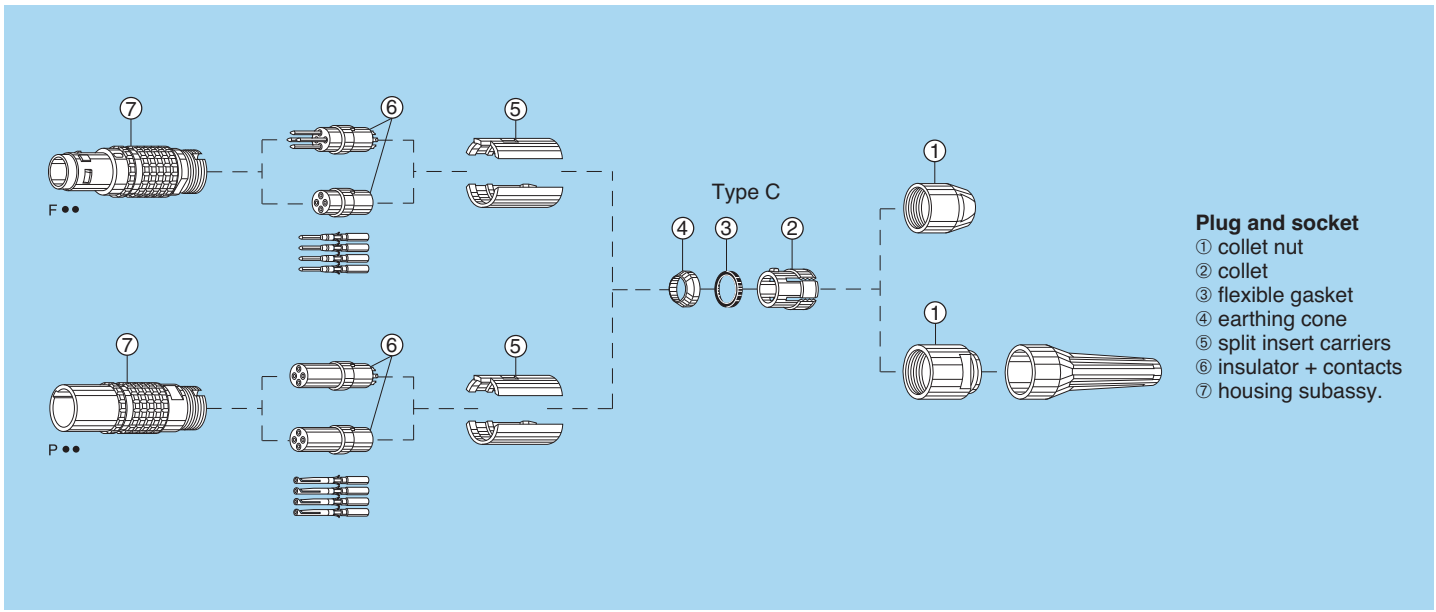

Plug and socket
① collet nut
② collet
③ flexible gasket
④ earthing cone
⑤ split insert carriers
⑥ insulator + contacts
⑦ housing subassy.

S series (C, L and K cable clamping)

See assembly instructions under www.lemo.com.

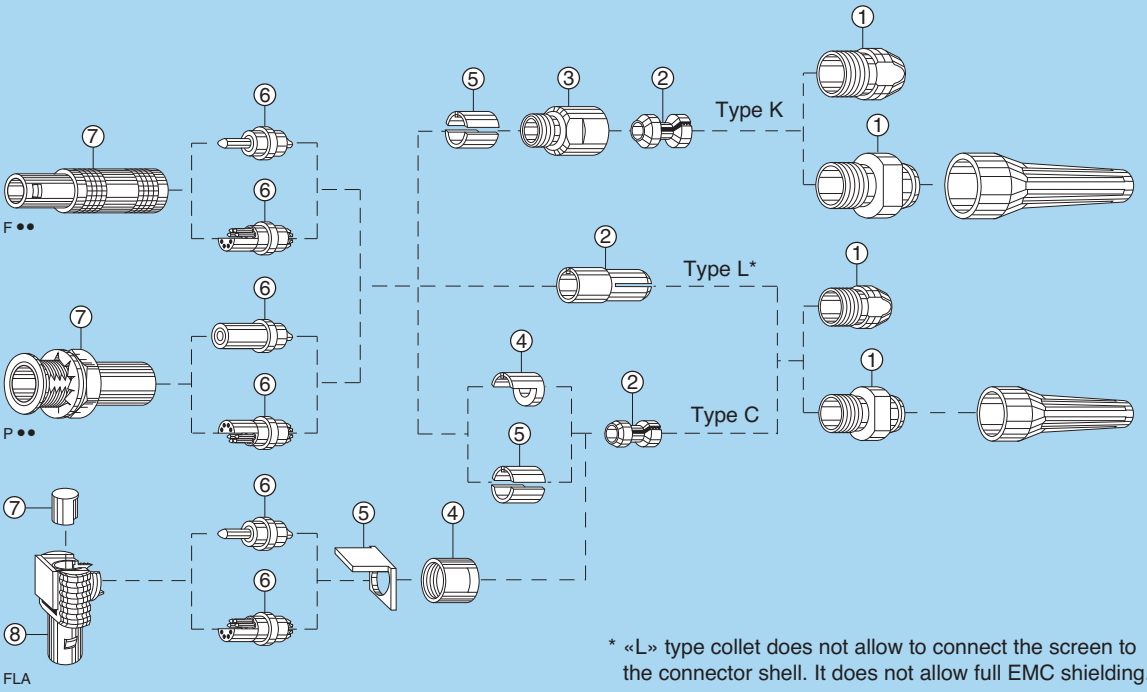

Plug and socket
① collet nut
② collet
③ oversize collet housing (type K)
④ earthing centre-piece (type C)
⑤ split centre-pieces (type K and C)
⑥ insulator + contacts
⑦ housing subassy.

Elbow plug
① collet nut
② collet
④ threaded sleeve
⑤ bracket
⑥ insulator + contacts
⑦ insulating sleeve
⑧ housing subassy.

* «L» type collet does not allow to connect the screen to the connector shell. It does not allow full EMC shielding.

E series (C and K cable clamping)

See assembly instructions under www.lemo.com.

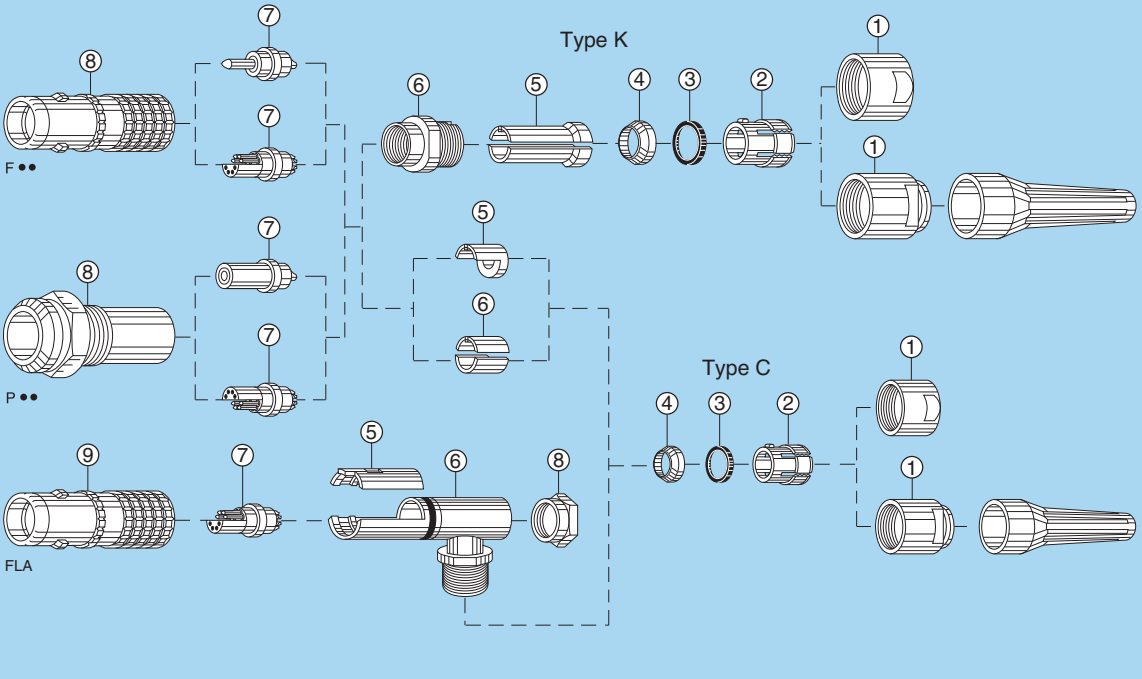

Plug and socket
① collet nut
② collet
③ flexible gasket
④ earthing cone
⑤ split centre-pieces (type K)
⑤ earthing centre-piece (type C)
⑥ oversize collet housing (type K)
⑥ earthing centre-piece (type C)
⑦ insulator + contacts
⑧ housing subassy.

Elbow plug
① collet nut
② collet
③ flexible gasket
④ earthing cone
⑤ split insert carrier
⑥ elbow inner shell
⑦ insulator + contacts
⑧ hex cap
⑨ housing subassy.

Maximum metal collet nut tightening torque

Standard series

	Series								
	00	0S	1S	2C	2S	3S	4S	5S	6S
Torque (Nm)	0.25	0.5	1.5	2.5	2.5	3	8	10	12

Watertight series

	Series									
	0E	0L	1E	1L	2E	2L	3E	4E	5E	6E
Torque (Nm)	0.7	0.7	0.8	0.8	2	2	3	5	8	12

Keyed series

	Series								
	00	0B	1B	XB	2B	2G	3B	4B	5B
Torque (Nm)	0.25	0.5	1.5	2.0	2.5	2.5	4	7	10

Watertight keyed series

	Series										
	TT	0K	0T	1K	1T	2K	2T	3K	3T	4K	5K
Torque (Nm)	0.25	0.7	0.7	0.8	0.8	2	2	3	3	5	8

Maximum elbow plug hex cap tightening torque

Keyed series

	Series						
	00	0B	1B	2B	3B	4B	5B
Torque (Nm)	0.2	0.25	0.5	0.5	1.5	3	5

Watertight series

	Series								
	0E	0L	1E	1L	2E	2L	3E	4E	5E
Torque (Nm)	0.8	0.8	1	1	1.2	1.2	1.5	3	5

Watertight keyed series

	Series					
	0K	1K	2K	3K	4K	5K
Torque (Nm)	0.8	1	1.2	1.5	3	5

1N = 0.102 kg

Maximum plastic collet nut tightening torque [1)]

	Series								
	00	0S	1S	2S	3S	1B	2B	3B	4B
Torque (Nm)	0.15	0.45	0.50	0.50	1.00	0.50	0.50	1.00	1.50

Note:
[1)] For applications subject to strong vibration, we recommend fixing the collet nut with epoxy resin. We recommend to tight to the maximum value. Optimal torque may depend on cable jacket design.

Technical tables

Table of American Wire Gauge

AWG	Construction		ø wire max		Wire section	
	Strand nb	AWG/ strand	(mm)	(in)	(mm^2)	(sq in)
0	259	24	11.277	0.444	52.90	0.0820
1	817	30	9.702	0.382	41.40	0.0641
2	259	26	8.89	0.35	33.20	0.0514
4	133	25	6.9596	0.274	21.5925	0.0335
6	133	27	5.5118	0.217	13.5885	0.0211
8	168	30	4.4450	0.175	8.5127	0.0132
8	133	29	4.3942	0.173	8.6053	0.0133
10	105	30	3.3020	0.13	5.3204	0.0082
10	37	26	2.9210	0.115	4.7397	0.0073
10	1	10	2.6162	0.103	5.2614	0.0082
12	37	28	2.3114	0.091	2.9765	0.0046
12	19	25	2.3622	0.093	3.0847	0.0048
12 [1)]	7	20	2.5400	0.10	3.6321	0.0056
12	1	12	2.0828	0.082	3.3081	0.0051
14	41	30	2.0574	0.081	2.0775	0.0032
14	19	27	1.8542	0.073	1.9413	0.0030
14 [1)]	7	22	2.0828	0.082	2.2704	0.0035
14	1	14	1.6510	0.065	2.0820	0.0032
16 [1)]	65	34	1.5748	0.062	1.3072	0.0020
16	26	30	1.5748	0.062	1.3174	0.0020
16	19	29	1.4986	0.059	1.2293	0.0019
16 [1)]	7	24	1.5494	0.061	1.4330	0.0022
16	1	16	1.3208	0.052	1.3076	0.0020
18 [1)]	65	36	1.2700	0.05	0.8234	0.0013
18 [1)]	42	34	1.2700	0.05	0.8447	0.0013
18	19	30	1.3208	0.052	0.9627	0.0015
18	16	30	1.2954	0.051	0.8107	0.0013
18	7	26	1.2700	0.05	0.8967	0.0014
18	1	18	1.0414	0.041	0.8229	0.0013

AWG	Construction		ø wire max		Wire section	
	Strand nb	AWG/ strand	(mm)	(in)	(mm^2)	(sq in)
20 [1)]	42	36	1.0160	0.04	0.5320	$8.2x10^{-4}$
20	19	32	1.0414	0.041	0.6162	0.0010
20	10	30	1.0160	0.04	0.5067	$7.9x10^{-4}$
20	7	28	0.9906	0.039	0.5631	$8.7x10^{-4}$
20	1	20	0.8382	0.033	0.5189	$8.0x10^{-4}$
22	19	34	0.8382	0.033	0.3821	$5.9x10^{-4}$
22	7	30	0.7874	0.031	0.3547	$5.5x10^{-4}$
22	1	22	0.6604	0.026	0.3243	$5.0x10^{-4}$
24 [1)]	42	40	0.6604	0.026	0.2045	$3.2x10^{-4}$
24	19	36	0.6858	0.027	0.2407	$3.7x10^{-4}$
24	7	32	0.6350	0.025	0.2270	$3.5x10^{-4}$
24	1	24	0.5588	0.022	0.2047	$3.2x10^{-4}$
26	19	38	0.5588	0.022	0.1540	$2.4x10^{-4}$
26	7	34	0.5080	0.02	0.1408	$2.2x10^{-4}$
26	1	26	0.4318	0.017	0.1281	$2.0x10^{-4}$
28 [1)]	19	40	0.4318	0.017	0.0925	$1.4x10^{-4}$
28	7	36	0.4064	0.016	0.0887	$1.4x10^{-4}$
28	1	28	0.3302	0.013	0.0804	$1.2x10^{-4}$
30	7	38	0.3302	0.013	0.0568	$8.8x10^{-5}$
30	1	30	0.2794	0.011	0.0507	$7.9x10^{-5}$
32	7	40	0.2794	0.011	0.0341	$5.3x10^{-5}$
32	1	32	0.2286	0.009	0.0324	$5.0x10^{-5}$
34	1	34	0.1693	0.007	0.0201	$3.1x10^{-5}$
36	1	36	0.127	0.005	0.0127	$2.0x10^{-5}$
38	1	38	0.1016	0.004	0.0081	$1.3x10^{-5}$
40	1	40	0.078	0.003	0.0049	$7.5x10^{-6}$

Note: [1)] not included in the standard

Table of wire gauges according to IEC-60228 standard

Conductor no x Ø (mm)	Max Ø (mm)	Max Ø (in)	Section (mm^2)	Section (sq in)
196x0.40	7.50	0.295	25.00	0.0387
7x2.14	6.10	0.240	25.00	0.0387
125x0.40	6.00	0.236	16.00	0.0248
7x1.72	4.90	0.192	16.00	0.0248
1x4.50	4.50	0.177	16.00	0.0248
80x0.40	4.70	0.155	10.00	0.0155
7x1.38	3.95	0.155	10.00	0.0155
1x3.60	3.60	0.141	10.00	0.0155
84x0.30	3.70	0.145	6.00	0.0093
7x1.50	3.15	0.124	6.00	0.0093
1x2.76	2.76	0.108	6.00	0.0093
56x0.30	2.80	0.110	4.00	0.0062
7x0.86	2.58	0.098	4.00	0.0062
1x2.25	2.25	0.082	4.00	0.0062
50x0.25	2.15	0.084	2.50	0.0038
7x0.68	2.04	0.080	2.50	0.0038
1x1.78	1.78	0.070	2.50	0.0038
30x0.25	1.60	0.062	1.50	0.0023
7x0.52	1.56	0.061	1.50	0.0023

Conductor no x Ø (mm)	Max Ø (mm)	Max Ø (in)	Section (mm^2)	Section (sq in)
1x1.40	1.40	0.055	1.50	0.0023
32x0.20	1.35	0.053	1.00	0.0015
7x0.43	1.29	0.050	1.00	0.0015
1x1.15	1.15	0.045	1.00	0.0015
42x0.15	1.20	0.047	0.75	0.0011
28x0.20	1.15	0.045	0.75	0.0011
1x1.00	1.00	0.039	0.75	0.0011
28x0.15	0.95	0.037	0.50	$7.7x10^{-4}$
16x0.20	0.90	0.035	0.50	$7.7x10^{-4}$
1x0.80	0.80	0.031	0.50	$7.7x10^{-4}$
7x0.25	0.75	0.029	0.34	$5.2x10^{-4}$
1x0.60	0.60	0.023	0.28	$4.3x10^{-4}$
14x0.15	0.75	0.029	0.25	$3.8x10^{-4}$
7x0.20	0.65	0.023	0.22	$3.4x10^{-4}$
18x0.10	0.50	0.019	0.14	$2.1x10^{-4}$
14x0.10	0.40	0.015	0.11	$1.7x10^{-4}$
21x0.07	0.40	0.015	0.09	$1.3x10^{-4}$
14x0.10	0.40	0.015	0.09	$1.3x10^{-4}$

Maximum current rating for conductor

Maximum current on insulated conductors up to an ambiant temperature of 30° C (from VDE 0100, parts 430 and 532 as well as other VDE regulations).

Nominal section mm^2	Group 2 Intens. max. A	Group 3 Intens. max. A
0.08	1.0	1.5
0.14	2.0	3.0
0.25	4.0	5.0
0.34	6.0	8.0
0.50	9.0	12.0
0.75	12.0	15.0
1.00	15.0	19.0
1.50	18.0	24.0
2.50	26.0	32.0

Group 2 Multi-conductor, e. g. solid cable under sheath, shielded cable, lead-sheath cables, …
Group 3 Single conductor and single conductor cable laid on open air in a way to leave at least a space between them equal to their diameter

Some formulae

Resistance R of a conductor: $R = \rho \bullet \frac{l}{A} [\Omega]$

Where: ρ = conductor resistivity
l = conductor length
A = conductor cross-section

Impedance of coaxial line: $Z = \frac{138}{\sqrt{\varepsilon_r}} \bullet \log \frac{D}{d} [\Omega]$

ε_r = dielectric constant
D = dielectric outer diameter
d = center conductor outer diameter

Signal attenuation: $\text{Attenuation} = 20 \bullet \log \frac{U_1}{U_2} [\text{dB}]$

U_1 = input signal voltage
U_2 = output signal voltage

Conversion of some units:

millimeters into inches:	1 mm = 0.0394 in
inches into millimeters:	1 in = 25.4 mm
centimeters into feet:	1 cm = 0.0328 ft
feet (12 in) into centimeters:	1 ft = 30.48 cm
square centimeters into square inches:	$1\ cm^2$ = 0.155 sq in
square inches into square centimeters:	1 sq in = $6.4516\ cm^2$
bar into pounds per square inch:	1 bar = 14.51 psi
bar into Pascal:	1 bar = 10^5 Pa
°C into °F:	°F = °C • 1.8 + 32
newtonmeter (Nm) into inch pound (in•lb)	1 Nm = 8.85 in•lb
$mbar \bullet l \bullet s^{-1}$ into $Torr \bullet l \bullet s^{-1}$	$1\ mbar \bullet l \bullet s^{-1} = 1.33\ Torr \bullet l \bullet s^{-1}$

Product safety notice

PLEASE READ AND FOLLOW ALL INSTUCTIONS CAREFULLY AND CONSULT ALL RELEVENT NATIONAL AND INTERNATIONAL SAFETY REGULATIONS FOR YOUR APPLICATION.
IMPROPER HANDLING, CABLE ASSEMBLY, OR WRONG USE OF CONNECTORS CAN RESULT IN HAZARDOUS SITUATIONS.

1. **SHOCK AND FIRE HAZARD**
   Incorrect wiring, the use of damaged components, presence of foreign objects (such as metal debris), and / or residue (such as cleaning fluids), can result in short circuits, overheating, and / or risk of electric shock.
   Mated components should never be disconnected while live as this may result in an exposed electric arc and local overheating, resulting in possible damage to components.

2. **HANDLING**
   Connectors and their components should be visually inspected for damage prior to installation and assembly. Suspect components should be rejected or returned to the factory for verification.
   Connector assembly and installation should only be carried out by properly trained personnel. Proper tools must be used during installation and / or assembly in order to obtain safe and reliable performance.

3. **USE**
   Connectors with exposed contacts should never be live (or on the current supply side of a circuit). Under general conditions voltages above 30 VAC and 42 VDC are considered hazardous and proper measures should be taken to eliminate all risk of transmission of such voltages to any exposed metal part of the connector.

4. **TEST AND OPERATING VOLTAGES**
   The maximum admissible operating voltage depends upon the national or international standards in force for the application in question. Air and creepage distances impact the operating voltage; reference values are indicated in the catalog however these may be influenced by PC board design and / or wiring harnesses.
   The test voltage indicated in the catalog is 75% of the mean breakdown voltage; the test is applied at 500 V/s and the test duration is 1 minute.

5. **CE MARKING** CE
   CE marking CE means that the appliance or equipment bearing it complies with the protection requirements of one or several European safety directives.
   CE marking CE applies to complete products or equipment, **but not to electromechanical components, such as connectors**.

6. **PRODUCT IMPROVEMENTS**
   The LEMO Group reserves the right to modify and improve to our products or specifications without providing prior notification.

Disclaimers

LEMO works constantly to improve the quality of its products; the information and illustrations figuring in this document may therefore vary and are not binding. In any case, LEMO makes no specific warranty of merchantability, fitness for a particular purpose, third party components as such or included in assembly, non-infringement, title, accuracy, completeness, or security. The user is fully responsible for his products and applications using LEMO component.

In no event shall LEMO, its affiliates, officers, agents or employees be liable for any incidental, indirect, special or consequential damages in connection with the products or services provided by LEMO, including (without limitation) loss of profits or revenues, interruption of business, loss of use of the products or any associated equipment, materials, components or products, damages to associated equipment or in combination with other components, materials.

Reproduction of significant portions of LEMO information in LEMO data books or data sheets is permissible only if reproduction is without alteration and is accompanied by all associated warranties, conditions, limitations, and notices. LEMO is not responsible or liable for such altered documentation. Information of third parties may be subject to additional restrictions.

LEMO HEADQUARTERS

SWITZERLAND
LEMO SA
Chemin des Champs-Courbes 28 - P.O. Box 194 - CH-1024 Ecublens
Tel. (+41 21) 695 16 00 - Fax (+41 21) 695 16 02 - e-mail: info@lemo.com

LEMO SUBSIDIARIES

AUSTRIA
LEMO Elektronik GesmbH
Lemböckgasse 49/E6-3
1230 Wien
Tel: (+43 1) 914 23 20 0
Fax:(+43 1) 914 23 20 11
sales@lemo.at

BRAZIL
LEMO Latin America Ltda
Av. José Rocha Bonfim,
214 Salas 224 / 225
Condomínio Praça Capital
Ed. Chicago
Campinas / SP - Brasil 13080-650
Tel: +55 (11) 98689 4736
info-la@lemo.com

CANADA
LEMO Canada Inc
44 East Beaver Creek Road, unit 20
Richmond Hill, Ontario L4B 1G8
Tel: (+1 905) 889 56 78
Fax: (+1 905) 889 49 70
info-canada@lemo.com

CHINA / HONG KONG
LEMO Electronics (Shanghai) Co., Ltd
First Floor, Block E,
18 Jindian Road, Pudong
Shanghai, China, 201206
Tel: (+86 21) 5899 7721
Fax: (+86 21) 5899 7727
cn.sales@lemo.com

DENMARK
LEMO Denmark A/S
Nybrovej # 97
2820 Gentofte
Tel: (+45) 45 20 44 00
Fax: (+45) 45 20 44 01
info-dk@lemo.com

FRANCE
LEMO France Sàrl
24/28 Avenue Graham Bell
Bâtiment Balthus 4
Bussy Saint Georges
77607 Marne la Vallée Cedex 3
Tel: (+33 1) 60 94 60 94
Fax: (+33 1) 60 94 60 90
info-fr@lemo.com

GERMANY
LEMO Elektronik GmbH
Hanns-Schwindt-Str. 6
81829 München
Tel: (+49 89) 42 77 03
Fax: (+49 89) 420 21 92
info@lemo.de

HUNGARY
REDEL Elektronika Kft
Nagysándor József u. 6-12
1201 Budapest
Tel: (+36 1) 421 47 10
Fax: (+36 1) 421 47 57
info-hu@lemo.com

ITALY
LEMO Italia srl
Viale Lunigiana 25
20125 Milano
Tel: (+39 02) 66 71 10 46
Fax: (+39 02) 66 71 10 66
sales.it@lemo.com

JAPAN
LEMO Japan Ltd
2-7-22, Mita,
Minato-ku, Tokyo, 108-0073
Tel: (+81 3) 54 46 55 10
Fax: (+81 3) 54 46 55 11
lemoinfo@lemo.co.jp

MIDDLE EAST
LEMO Middle East Gen. Trad. LLC
Concorde Tower 6th Floor,
Dubai Media City, P.O. Box 126732
Dubai, United Arab Emirates
Tel: +971 55 222 36 77
info-me@lemo.com

NETHERLANDS / BELGIUM
LEMO Connectors Benelux
De Trompet 1060
1967 DA Heemskerk
Tel. (+31) 251 25 78 20
Fax (+31) 251 25 78 21
info@lemo.nl

NORWAY / ICELAND
LEMO Norway A/S
Soerumsandvegen 69,
1920 Soerumsand
Tel: (+47) 22 91 70 40
Fax: (+47) 22 91 70 41
info-no@lemo.com

SINGAPORE
LEMO Asia Pte Ltd
4 Leng Kee Road,
#06-09 SiS Building
Singapore 159088
Tel: (+65) 6476 0672
Fax: (+65) 6474 0672
sg.sales@lemo.com

SPAIN / PORTUGAL
IBERLEMO SAU
Brasil, 45, 08402 Granollers
Barcelona
Tel: (+34 93) 860 44 20
Fax: (+34 93) 879 10 77
info-es@lemo.com

SWEDEN / FINLAND
LEMO Nordic AB
Mariehällsvägen 39A
168 65 Bromma
Tel: (+46 8) 635 60 60
Fax: (+46 8) 635 60 61
info-se@lemo.com

SWITZERLAND
LEMO Verkauf AG
Grundstrasse 22 B, 6343 Rotkreuz
Tel: (+41 41) 790 49 40
ch.sales@lemo.com

UNITED KINGDOM
LEMO UK Ltd
12-20 North Street, Worthing,
West Sussex, BN11 1DU
Tel: (+44 1903) 23 45 43
lemouk@lemo.com

USA
LEMO USA Inc
P.O. Box 2408
Rohnert Park, CA 94927-2408
Tel: (+1 707) 578 88 11
(+1 800) 444 53 66
Fax:(+1 707) 578 08 69
info-US@lemo.com

© CAT.UM.LEN.P0712, updated November 2017

LEMO DISTRIBUTORS

AUSTRALIA, CHILE, CZECH REPUBLIC, GREECE, INDIA, ISRAEL, NEW ZEALAND, POLAND, RUSSIA, SOUTH AFRICA, SOUTH KOREA, TAIWAN, TURKEY, UKRAINE

www.lemo.com

