CUSTOMER	MCM	FILE NO.	AR70628

REV.	DESCRIPTION	DRAWN / DATE	APPROVED / DATE
0	INITIAL RELEASE	FROS 08/07/2013	FROS 08/07/2013

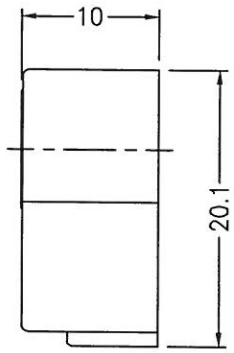

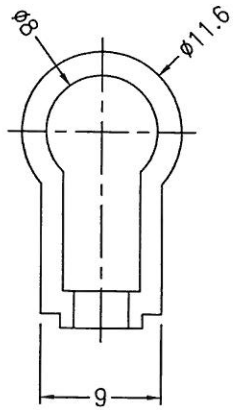

PLASTIC HOUSING

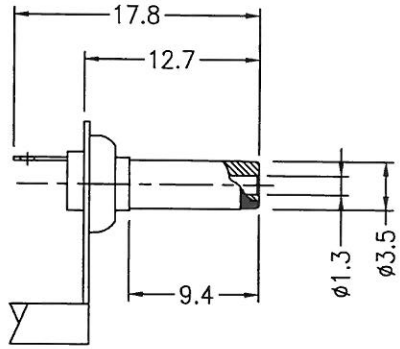

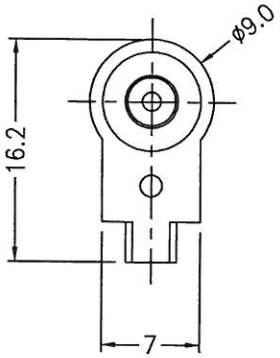

METAL BODY

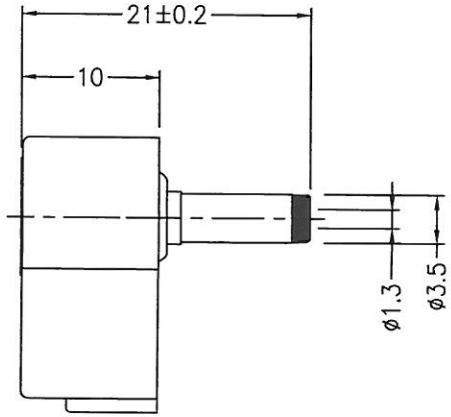

ASSEMBLY

RoHS

DIMENSIONS ARE IN mm [INCH]	TOLERANCES ARE FRACTIONS DECIMALS ANGLES	MATERIAL		1.3x3.4MM RIGHT-ANGLE DC PLUG	P/N AR70628	DRAWN FROS	DATE 08/07/2013
MOLD NO.	.x ±0.2 [0.008]	FINISH			PROJECT NO.		
AR70628	.xx ±0.12 [0.005]	COLOR			SCALE 2:1 SIZE A4 SHEET 1 OF 1		MS062