molex
one company › a world of innovation

Part Number: 2004490001
Status: Active
Overview: EdgeLock Wire-to-Edge-Card Signal System
Description: 2.00mm Pitch EdgeLock Crimp Terminal, Phosphor Bronze, Tin (Sn) Plating,Reel

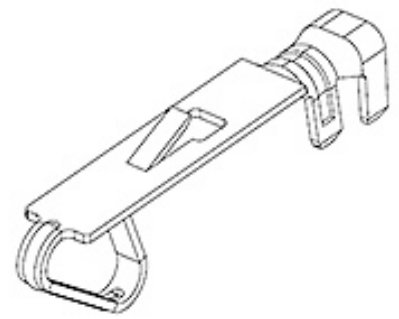

Series image - Reference only

Documents:
Drawing (PDF)
Product Specification 2008900001PS-000 (PDF)
Packaging Specification 2004490001PK-000 (PDF)
RoHS Certificate of Compliance (PDF)

General

Product Family	Crimp Terminals
Series	200449
Application	Signal
Crimp Quality Equipment	Yes
Overview	EdgeLock Wire-to-Edge-Card Signal System
Product Name	EdgeLock
UPC	889056469395

Physical

Durability (mating cycles max)	30
Gender	N/A
Material - Metal	Phosphor Bronze
Material - Plating Mating	Tin
Material - Plating Termination	Tin
Net Weight	47.042/g
Packaging Type	Reel
Plating min - Mating	1.000µm
Plating min - Termination	1.000µm
Termination Interface: Style	Crimp or Compression
Wire Insulation Diameter	1.10-1.40mm
Wire Size AWG	22, 24
Wire Size mm²	N/A

Electrical

Current - Maximum per Contact	3.0A
Voltage - Maximum	125V

Material Info

Reference - Drawing Numbers

Crimp Specification	2004490001CS-000
Packaging Specification	2004490001PK-000
Product Specification	2008900001PS-000
Sales Drawing	2004490001-000

EU ELV
Not Relevant

EU RoHS
Compliant

China RoHS

REACH SVHC
Not Contained Per -ED/01/2018 (15 January 2018)

Halogen-Free Status
Low-Halogen

Need more information on product environmental compliance?

Email productcompliance@molex.com
Please visit the Contact Us section for any non-product compliance questions.

China ROHS	Green Image
ELV	Not Relevant
RoHS Phthalates	Not Contained

Search Parts in this Series
200449 Series

Use With
EdgeLock Edge Card Connector 200890