KEMET Part Number: C0402C270K5GACTU

(C0402C270K5GAC7867)

SMD Comm C0G, Ceramic, 27 pF, 10%, 50 VDC, C0G, SMD, MLCC, Ultra-Stable, Low Loss, Class I, 0402

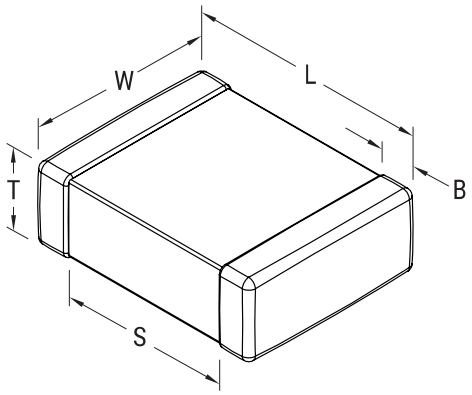

General Information	
Supplier:	KEMET
Series:	SMD Comm C0G
Style:	SMD Chip
Description:	SMD, MLCC, Ultra-Stable, Low Loss, Class I
Features:	Ultra-Stable, Low Loss, Class I
RoHS:	Yes
Termination:	Tin
Marking:	No
Miscellaneous:	Note: KEMET 50V rated parts may be operated at 63 Volts
Chip Size:	0402

Dimensions	
L	1mm +/-0.05mm
W	0.5mm +/-0.05mm
T	0.5mm +/-0.05mm
S	0.3mm MIN
B	0.3mm +/-0.1mm

Specifications	
Capacitance:	27 pF
Capacitance Tolerance:	10%
Voltage DC:	50 VDC
Dielectric Withstanding Voltage:	125 V
Temperature Range:	-55/+125C
Temperature Coefficient:	C0G
Dissipation Factor:	0.10% 1MHz 25C
Aging Rate:	0% Loss/Decade Hour
Insulation Resistance:	100 GOhms

Packaging Specifications	
Packaging:	T&R, 180mm, Paper Tape
Packaging Quantity:	10000

Statements of suitability for certain applications are based on our knowledge of typical operating conditions for such applications, but are not intended to constitute - and we specifically disclaim - any warranty concerning suitability for a specific customer application or use. This Information is intended for use only by customers who have the requisite experience and capability to determine the correct products for their application. Any technical advice inferred from this Information or otherwise provided by us with reference to the use of our products is given gratis, and we assume no obligation or liability for the advice given or results obtained.

© 2006 - 2018 IntelliData.net