OMRON

Machine Automation Controller

NX-series

Temperature Control Units

User's Manual

NX-TC□□□□

Temperature Control Units

SYSMAC
always in control

H228-E1-02

NOTE

All rights reserved. No part of this publication may be reproduced, stored in a retrieval system, or transmitted, in any form, or by any means, mechanical, electronic, photocopying, recording, or otherwise, without the prior written permission of OMRON.

No patent liability is assumed with respect to the use of the information contained herein. Moreover, because OMRON is constantly striving to improve its high-quality products, the information contained in this manual is subject to change without notice. Every precaution has been taken in the preparation of this manual. Nevertheless, OMRON assumes no responsibility for errors or omissions. Neither is any liability assumed for damages resulting from the use of the information contained in this publication.

Trademarks

- Sysmac and SYSMAC are trademarks or registered trademarks of OMRON Corporation in Japan and other countries for OMRON factory automation products.
- Microsoft, Windows, Windows Vista, Excel, and Visual Basic are either registered trademarks or trademarks of Microsoft Corporation in the United States and other countries.
- EtherCAT® is registered trademark and patented technology, licensed by Beckhoff Automation GmbH, Germany.
- Safety over EtherCAT® is registered trademark and patented technology, licensed by Beckhoff Automation GmbH, Germany.
- ODVA, CIP, CompoNet, DeviceNet, and EtherNet/IP are trademarks of ODVA.
- The SD and SDHC logos are trademarks of SD-3C, LLC.

Other company names and product names in this document are the trademarks or registered trademarks of their respective companies.

Copyrights

Microsoft product screen shots reprinted with permission from Microsoft Corporation.

Introduction

Thank you for purchasing an NX-series Temperature Control Unit.

This manual contains information that is necessary to use your NX-series Temperature Control Unit. Please read this manual and make sure you understand the functionality and performance of the NX-series Temperature Control Unit before you attempt to use it in a control system.

Keep this manual in a safe place where it will be available for reference during operation.

Intended Audience

This manual is intended for the following personnel, who must also have knowledge of electrical systems (an electrical engineer or the equivalent).

- Personnel in charge of introducing FA systems.
- Personnel in charge of designing FA systems.
- Personnel in charge of installing and maintaining FA systems.
- Personnel in charge of managing FA systems and facilities.

For programming, this manual is intended for personnel who understand the programming language specifications in international standard IEC 61131-3 or Japanese standard JIS B 3503.

Applicable Products

This manual covers the following product.

- NX-series Temperature Control Unit

  NX-TC□□□□

CONTENTS

Introduction **1**
Intended Audience 1
Applicable Products 1

Relevant Manuals **8**

Manual Structure **9**
Page Structure and Icons 9
Special Information 10
Precaution on Terminology 10

Terms and Conditions Agreement **12**
Warranty, Limitations of Liability 12
Application Considerations 13
Disclaimers 13

Safety Precautions **14**
Definition of Precautionary Information 14
Symbols 14
Warnings 15
Cautions 16

Precautions for Safe Use **18**

Precautions for Correct Use **23**

Regulations and Standards **24**
Conformance to EU Directives 24
Conformance Requirement to EU Directives 25
Conformance to UL and CSA Standards 25
Conformance to KC Standards 25
Software Licenses and Copyrights 25

Unit Versions **26**
Unit Versions 26
Unit Versions and Support Software Versions 27

Related Manuals **28**

Terminology **31**

Revision History **34**

Sections in this Manual **35**

Section 1 Features and System Configuration

1-1 Features **1-2**
1-1-1 Common Features of Temperature Control Units 1-2
1-1-2 Features of Standard Control Type 1-4
1-1-3 Features of Heating/Cooling Control Type 1-5

1-2 System Configuration **1-6**
1-2-1 System Configuration in the Case of a CPU Unit 1-6
1-2-2 System Configuration of Slave Terminals 1-7

1-3 Temperature Control System and Application Examples 1-9
1-3-1 Temperature Control System 1-9
1-3-2 Application Examples 1-13
1-3-3 Overview of the Data in the Temperature Control Unit and the Access Method 1-14
1-4 Model List 1-17
1-4-1 Model Notation 1-17
1-4-2 Model List 1-18
1-5 List of Functions 1-19
1-6 Support Software 1-22

Section 2 Specifications and Operation Procedures

2-1 General Specifications 2-2
2-2 Individual Specifications 2-3
2-3 Operation Procedures 2-4
2-3-1 Overall Procedure 2-4
2-3-2 Unit Initial Setting Procedure 2-6
2-3-3 Backing up the Tuning Parameters 2-7

Section 3 Part Names and Functions

3-1 Part Names 3-2
3-2 Terminal Blocks 3-4
3-3 Indicators 3-5
3-3-1 TS Indicator 3-6
3-3-2 Output Indicators 3-6

Section 4 Installation and Wiring

4-1 Installing NX Units 4-2
4-1-1 Installing NX Units 4-2
4-1-2 Attaching Markers 4-4
4-1-3 Removing NX Units 4-5
4-1-4 Installation Orientation 4-7
4-2 Power Supply Types and Wiring 4-8
4-2-1 Applications of I/O Power Supply and Supply Methods 4-8
4-2-2 Calculating the Total Current Consumption from I/O Power Supply 4-9
4-3 Wiring the Terminals 4-10
4-3-1 Wiring to the Screwless Clamping Terminal Block 4-10
4-3-2 Checking the Wiring 4-26
4-4 Terminal Arrangement and Wiring Examples 4-28
4-4-1 Terminal Arrangement and Wiring Examples for Each Model 4-28
4-4-2 Switching the Allowable Load Resistance 4-41
4-5 Installing Temperature Sensors for Packing Machines 4-43

Section 5 I/O Refreshing

5-1 I/O Refreshing 5-2
5-1-1 I/O Refreshing from CPU Units to NX Units 5-2
5-1-2 I/O Refreshing from the CPU Unit or Industrial PC to Slave Terminals 5-3
5-1-3 Calculating the NX Unit I/O Response Times 5-4
5-2 I/O Refreshing Methods 5-5
5-2-1 Types of I/O Refreshing Methods 5-5
5-2-2 Setting the I/O Refreshing Methods 5-5
5-2-3 Free-Run Refreshing 5-7

Section 6 I/O Data Specifications and Lists of Settings

6-1 Specifications of I/O Data 6-2
6-1-1 Allocatable I/O Data 6-2
6-1-2 Details about Aggregated Data 6-16
6-1-3 Registering the Default Values for I/O Data 6-21
6-1-4 Method of Accessing the I/O Data for Adjustment 6-31
6-2 List of Settings 6-33

Section 7 Functions

7-1 Function Block Diagram 7-3
7-1-1 Input Function Block Diagram 7-4
7-1-2 Control Processing Function Block Diagram 7-5
7-1-3 Tuning Function Block Diagram 7-6
7-1-4 Control Output Function Block Diagram 7-7
7-1-5 Error Detection Function Block Diagram 7-8
7-2 Selecting Channel to Use 7-9
7-3 Input Function 7-11
7-3-1 Input Type Settings 7-11
7-3-2 Temperature Unit (°C/°F) Setting 7-13
7-3-3 Decimal Point Position Setting 7-15
7-3-4 Cold Junction Compensation Enable/Disable 7-17
7-3-5 Temperature Input Correction 7-19
7-3-6 Input Digital Filter 7-22
7-3-7 Measuring the Ambient Temperature around Terminals 7-24
7-4 Control Processing 7-25
7-4-1 ON/OFF control 7-25
7-4-2 PID control 7-28
7-4-3 Heating and Cooling Control 7-32
7-4-4 Run or Stop Controls 7-37
7-4-5 Direct and Reverse Operation 7-38
7-4-6 Manual MV 7-40
7-4-7 MV at Error 7-42
7-4-8 MV limit 7-44
7-4-9 Load Rejection MV 7-46
7-4-10 MV Branch 7-48
7-4-11 Load-short circuit protection 7-56
7-5 Tuning 7-57
7-5-1 Autotuning (AT) 7-57
7-5-2 Automatic Filter Adjustment 7-60
7-5-3 Water Cooling Output Adjustment Function 7-66
7-5-4 Adaptive control 7-71
7-5-5 Notifying the Update of Tuning Parameters 7-85

7-6 Control Output Functions 7-87
7-6-1 Control Period 7-87
7-6-2 Minimum Output ON/OFF Band 7-89
7-6-3 Output Signal Range Setting 7-90
7-6-4 Limiting Simultaneous Outputs 7-91

7-7 Error Detection 7-97
7-7-1 Sensor Disconnection Detection 7-97
7-7-2 Heater Burnout Detection 7-98
7-7-3 SSR Failure Detection 7-101
7-7-4 Temperature Alarm 7-105
7-7-5 LBA (Loop Burnout Alarm) 7-111

Section 8 Troubleshooting

8-1 How to Check for Errors 8-2

8-2 Checking for Errors with the Indicators 8-3

8-3 Checking for Errors and Troubleshooting on the Support Software 8-5
8-3-1 Checking for Errors from the Sysmac Studio 8-5
8-3-2 Checking for Errors from Support Software Other Than the Sysmac Studio 8-6
8-3-3 Event Codes and Corrections for Errors 8-7
8-3-4 Meaning of Error 8-14

8-4 Resetting Errors 8-32

8-5 Unit-specific Troubleshooting 8-33

8-6 Troubleshooting Flowchart 8-36

Section 9 Inspection and Maintenance

9-1 Cleaning and Inspection 9-2
9-1-1 Cleaning 9-2
9-1-2 Periodic Inspection 9-2

9-2 Maintenance Procedures 9-4
9-2-1 Storing Tuning Parameters 9-4
9-2-2 Unit Replacement Procedure 9-4

Appendices

A-1 Datasheet A-3
A-1-1 Model List A-3
A-1-2 Detailed Specifications A-4
A-1-3 Table of Reference Accuracies and Temperature Coefficients A-31
A-1-4 Specifications of Cold Junction Compensation Error for Thermocouple Inputs A-33

A-2 Dimensions A-35
A-2-1 Screwless Clamping Terminal Block Type A-35

A-3 List of NX Objects A-37
A-3-1 Format of Object Descriptions A-37
A-3-2 Unit Information Objects A-38
A-3-3 Objects That Accept I/O Allocations A-39
A-3-4 Other Objects A-69

A-4 CT (Current Transformer) A-86
A-4-1 Connectable CTs....A-86
A-4-2 CT Installation Locations....A-89
A-4-3 Calculation Methods for Heater Burnout Detection Currents and SSR Failure Detection Currents A-89

A-5 Sample programming....A-92
A-5-1 Items Common to Each Sample Program....A-93
A-5-2 Standby Sequence Alarm....A-97
A-5-3 Tuning Parameter Backup Part 1....A-101
A-5-4 Tuning Parameter Backup Part 2....A-104
A-5-5 Inheriting the MV when Switching to Manual Mode A-107
A-5-6 I/O Data Tuning Parameter Update....A-111
A-5-7 When the Temperature Control Unit is Connected to a CPU Unit....A-117

A-6 Version Information with CPU Units A-122
A-6-1 Relationship between Unit Versions of Units A-122
A-6-2 Functions That Were Added or Changed for Each Unit Version....A-124

A-7 Version Information with Communications Coupler Units A-125
A-7-1 Connection to an EtherCAT Coupler Unit A-125
A-7-2 Connection to an EtherNet/IP Coupler Unit A-127

A-8 Displaying the Edit Unit Operation Settings Tab Page A-129
A-8-1 Connection to the CPU Unit....A-129
A-8-2 Connection to the Slave Terminal A-130

A-9 Edit Unit Operation Settings Tab Page....A-132

A-10 Temperature Sensor for Packing Machines....A-134
A-10-1 Model Number Legend....A-134
A-10-2 Dimensions A-135
A-10-3 Mounting Brackets A-135

Index

Relevant Manuals

The table below provides the relevant manuals for the NX-series Temperature Control Units.

Read all of the manuals that are relevant to your system configuration and application to make the most of the NX-series Temperature Control Units.

Other manuals, such as related product manuals, are necessary for specific system configurations and applications. Refer to *Related Manuals* on page 28 for the related manuals.

Manual name	Application
NX-series Temperature Control Units User's Manual	Learning how to use NX-series Temperature Control Units.
NX-series Data Reference Manual	Referencing lists of the data that is required to configure systems with NX-series Units

Manual Structure

Page Structure and Icons

The following page structure and icons are used in this manual.

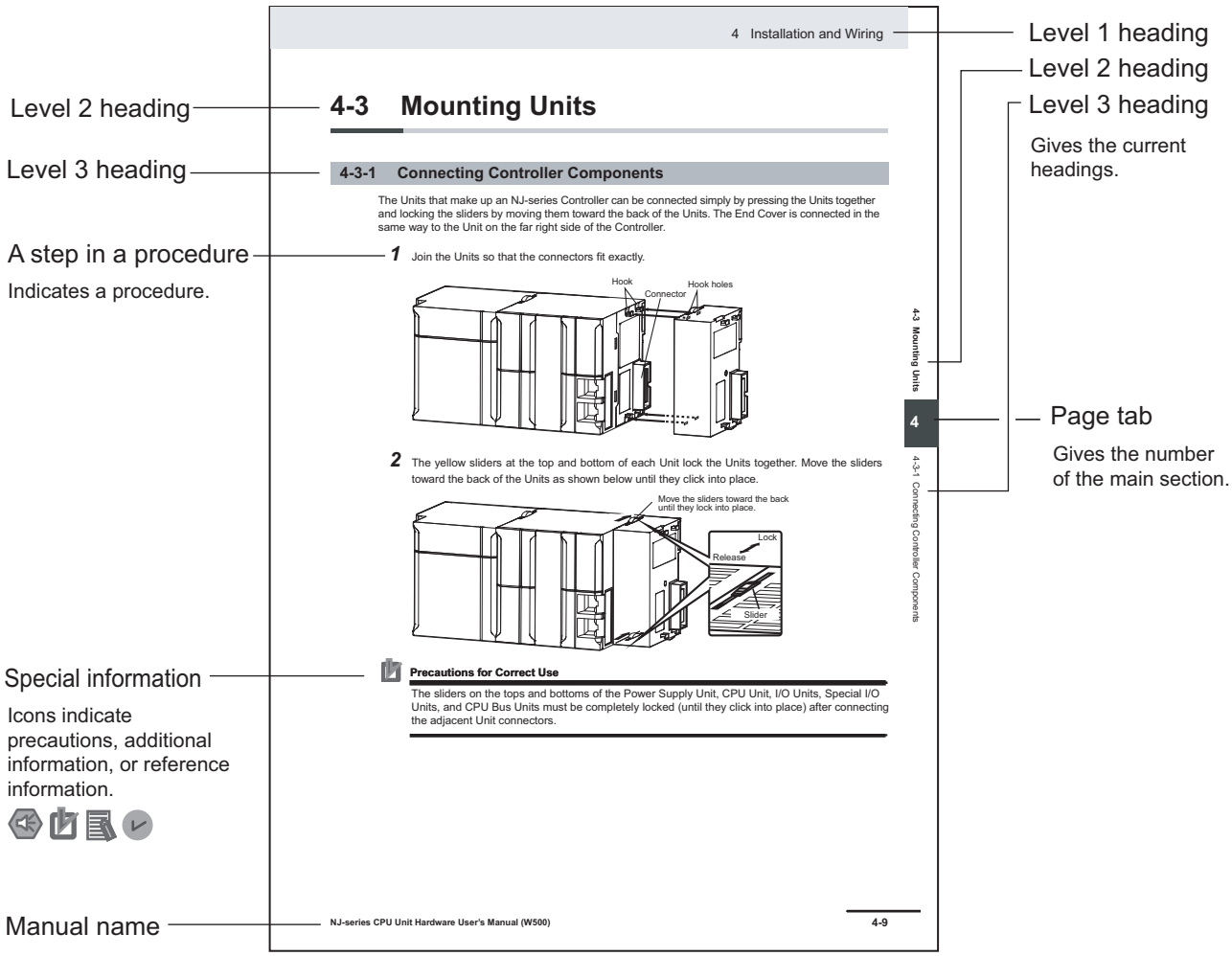

Note This illustration is provided only as a sample. It may not literally appear in this manual.

Special Information

Special information in this manual is classified as follows:

Precautions for Safe Use

Precautions on what to do and what not to do to ensure safe usage of the product.

Precautions for Correct Use

Precautions on what to do and what not to do to ensure proper operation and performance.

Additional Information

Additional information to read as required.

This information is provided to increase understanding or make operation easier.

Version Information

Information on differences in specifications and functionality for CPU Units, Industrial PCs, and Communications Coupler Units with different unit versions and for different versions of the Support Software is given.

Note References are provided to more detailed or related information.

Precaution on Terminology

- In this manual, “download” refers to transferring data from the Support Software to a physical device and “upload” refers to transferring data from a physical device to the Support Software.
- In this manual, the directions in relation to the Units are given in the following figure, which shows upright installation.

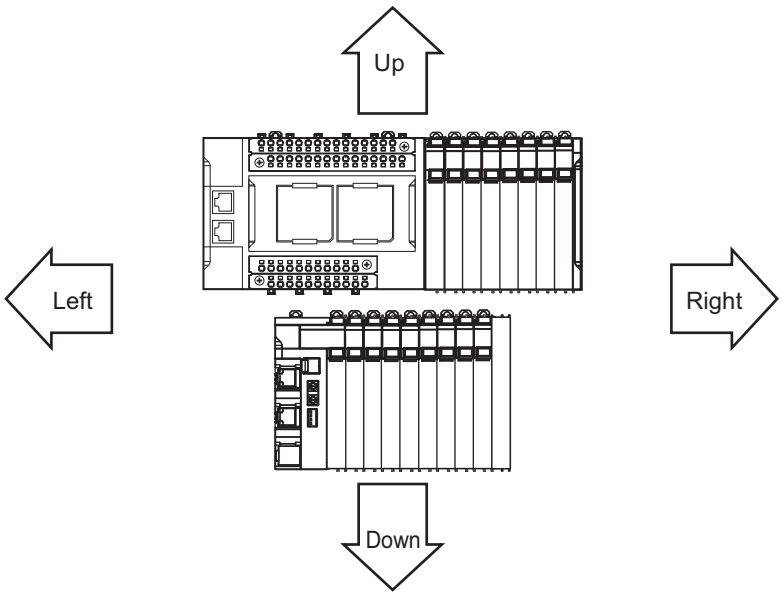

- This user's manual refers to NY-series IPC Machine Controller Industrial Panel PCs and Industrial Box PCs as simply *Industrial PCs* or as *NY-series Industrial PCs*.
- This user's manual refers to the built-in EtherCAT port on an NJ/NX-series Controller or NY-series Industrial PC as simply a built-in EtherCAT port.
- This user's manual may omit manual names and manual numbers in places that refer to the user's manuals for CPU Units and Industrial PCs. The following table gives some examples. When necessary, refer to *Related Manuals* on page 28 to determine the appropriate manual based on the common text for the omitted contents.

Examples

Manual name	Omitted contents	Common text
NJ/NX-series CPU Unit Software User's Manual	Software user's manual for the connected CPU Unit or Industrial PC	Software User's Manual
NY-series IPC Machine Controller Industrial Panel PC / Industrial Box PC Software User’s Manual		
NJ/NX-series CPU Unit Built-in EtherCAT® Port User's Manual	User's manual for the built-in EtherCAT port on the connected CPU Unit or Industrial PC	Built-in EtherCAT port
NY-series IPC Machine Controller Industrial Panel PC / Industrial Box PC Built-in EtherCAT® Port User’s Manual		

- This user's manual may omit manual names and manual numbers in places that refer to the user's manuals for Communications Coupler Units. If you will use a Communications Coupler Unit, refer to *Related Manuals* on page 28 to identify the manual for your Unit.
- This user's manual omits the "x" sign for units displayed in decimals. For example, "x0.1°C" is described as "0.1°C".

Terms and Conditions Agreement

Warranty, Limitations of Liability

Warranties

Exclusive Warranty

Omron's exclusive warranty is that the Products will be free from defects in materials and workmanship for a period of twelve months from the date of sale by Omron (or such other period expressed in writing by Omron). Omron disclaims all other warranties, express or implied.

Limitations

OMRON MAKES NO WARRANTY OR REPRESENTATION, EXPRESS OR IMPLIED, ABOUT NON-INFRINGEMENT, MERCHANTABILITY OR FITNESS FOR A PARTICULAR PURPOSE OF THE PRODUCTS. BUYER ACKNOWLEDGES THAT IT ALONE HAS DETERMINED THAT THE PRODUCTS WILL SUITABLY MEET THE REQUIREMENTS OF THEIR INTENDED USE.

Omron further disclaims all warranties and responsibility of any type for claims or expenses based on infringement by the Products or otherwise of any intellectual property right.

Buyer Remedy

Omron's sole obligation hereunder shall be, at Omron's election, to (i) replace (in the form originally shipped with Buyer responsible for labor charges for removal or replacement thereof) the non-complying Product, (ii) repair the non-complying Product, or (iii) repay or credit Buyer an amount equal to the purchase price of the non-complying Product; provided that in no event shall Omron be responsible for warranty, repair, indemnity or any other claims or expenses regarding the Products unless Omron's analysis confirms that the Products were properly handled, stored, installed and maintained and not subject to contamination, abuse, misuse or inappropriate modification. Return of any Products by Buyer must be approved in writing by Omron before shipment. Omron Companies shall not be liable for the suitability or unsuitability or the results from the use of Products in combination with any electrical or electronic components, circuits, system assemblies or any other materials or substances or environments. Any advice, recommendations or information given orally or in writing, are not to be construed as an amendment or addition to the above warranty.

See http://www.omron.com/global/ or contact your Omron representative for published information.

Limitation on Liability; Etc

OMRON COMPANIES SHALL NOT BE LIABLE FOR SPECIAL, INDIRECT, INCIDENTAL, OR CONSEQUENTIAL DAMAGES, LOSS OF PROFITS OR PRODUCTION OR COMMERCIAL LOSS IN ANY WAY CONNECTED WITH THE PRODUCTS, WHETHER SUCH CLAIM IS BASED IN CONTRACT, WARRANTY, NEGLIGENCE OR STRICT LIABILITY.

Further, in no event shall liability of Omron Companies exceed the individual price of the Product on which liability is asserted.

Application Considerations

Suitability of Use

Omron Companies shall not be responsible for conformity with any standards, codes or regulations which apply to the combination of the Product in the Buyer's application or use of the Product. At Buyer's request, Omron will provide applicable third party certification documents identifying ratings and limitations of use which apply to the Product. This information by itself is not sufficient for a complete determination of the suitability of the Product in combination with the end product, machine, system, or other application or use. Buyer shall be solely responsible for determining appropriateness of the particular Product with respect to Buyer's application, product or system. Buyer shall take application responsibility in all cases.

NEVER USE THE PRODUCT FOR AN APPLICATION INVOLVING SERIOUS RISK TO LIFE OR PROPERTY WITHOUT ENSURING THAT THE SYSTEM AS A WHOLE HAS BEEN DESIGNED TO ADDRESS THE RISKS, AND THAT THE OMRON PRODUCT(S) IS PROPERLY RATED AND INSTALLED FOR THE INTENDED USE WITHIN THE OVERALL EQUIPMENT OR SYSTEM.

Programmable Products

Omron Companies shall not be responsible for the user's programming of a programmable Product, or any consequence thereof.

Disclaimers

Performance Data

Data presented in Omron Company websites, catalogs and other materials is provided as a guide for the user in determining suitability and does not constitute a warranty. It may represent the result of Omron's test conditions, and the user must correlate it to actual application requirements. Actual performance is subject to the Omron's Warranty and Limitations of Liability.

Change in Specifications

Product specifications and accessories may be changed at any time based on improvements and other reasons. It is our practice to change part numbers when published ratings or features are changed, or when significant construction changes are made. However, some specifications of the Product may be changed without any notice. When in doubt, special part numbers may be assigned to fix or establish key specifications for your application. Please consult with your Omron's representative at any time to confirm actual specifications of purchased Product.

Errors and Omissions

Information presented by Omron Companies has been checked and is believed to be accurate; however, no responsibility is assumed for clerical, typographical or proofreading errors or omissions.

Safety Precautions

Definition of Precautionary Information

The following notation is used in this manual to provide precautions required to ensure safe usage of the NX-series Temperature Control Units.

The safety precautions that are provided are extremely important to safety. Always read and heed the information provided in all safety precautions.

The following notation is used.

WARNING	Indicates a potentially hazardous situation which, if not avoided, could result in death or serious injury. Additionally, there may be severe property damage.
Caution	Indicates a potentially hazardous situation which, if not avoided, may result in minor or moderate injury, or property damage.

Symbols

	The circle and slash symbol indicates operations that you must not do. The specific operation is shown in the circle and explained in text. This example indicates prohibiting disassembly.
	The triangle symbol indicates precautions (including warnings). The specific operation is shown in the triangle and explained in text. This example indicates a precaution for electric shock.
	The triangle symbol indicates precautions (including warnings). The specific operation is shown in the triangle and explained in text. This example indicates a general precaution.
	The filled circle symbol indicates operations that you must do. The specific operation is shown in the circle and explained in text. This example shows a general precaution for something that you must do.

Warnings

⚠ WARNING

During Power Supply

Do not touch the terminal section while power is ON.

Electric shock may occur.

Do not attempt to take any Unit apart.

In particular, high-voltage parts are present in Units that supply power while power is supplied or immediately after power is turned OFF. Touching any of these parts may result in electric shock. There are sharp parts inside the Unit that may cause injury.

Fail-safe Measures

Provide safety measures in external circuits to ensure safety in the system if an abnormality occurs due to malfunction of the CPU Unit, Industrial PC, other Units, or slaves or due to other external factors affecting operation.

Not doing so may result in serious accidents due to incorrect operation.

Emergency stop circuits, interlock circuits, limit circuits, and similar safety measures must be provided in external control circuits.

The CPU Unit or Industrial PC, will turn OFF all outputs from Output Units in the following cases. The remote I/O slaves will operate according to the settings in the slaves.

- If a power supply error occurs.
- If the power supply connection becomes faulty.
- If a CPU watchdog timer error or CPU reset occurs.
- If a Controller error in the major fault level occurs.
- While the CPU Unit is on standby until RUN mode is entered after the power is turned ON

External safety measures must be provided to ensure safe operation of the system in such cases.

The outputs may remain ON or OFF due to deposition or burning of the output relays or destruction of the output transistors. As a countermeasure for such problems, external safety measures must be provided to ensure safe operation of the system.

If external power supplies for slaves or other devices are overloaded or short-circuited, the voltage will drop, outputs will turn OFF, and the system may be unable to read inputs. Provide external safety measures in control with monitoring of external power supply voltage as required so that the system operates safely in such a case.

You must take fail-safe measures to ensure safety in the event of incorrect, missing, or abnormal signals caused by broken signal lines, momentary power interruptions, or other causes.

Not doing so may result in serious accidents due to incorrect operation.

Voltage and Current Inputs

Make sure that the voltages and currents that are input to the Units and slaves are within the specified ranges.

Inputting voltages or currents that are outside of the specified ranges may cause accidents or fire.

Transferring

Always confirm safety at the destination node before you transfer Unit configuration information, parameters, settings, or other data from tools such as the Sysmac Studio.

The devices or machines may operate unexpectedly, regardless of the operating mode of the Controller.

Cautions

Caution

Wiring

When you connect a computer or other peripheral device to a Communications Coupler Unit that has a non-isolated DC power supply, either ground the 0-V side of the external power supply (i.e. Unit power supply) or do not ground it at all.

If the peripheral devices are grounded incorrectly, the external power supply (i.e. Unit power supply) may be short-circuited.

Never ground the 24-V side of the power supply, as shown in the following figure.

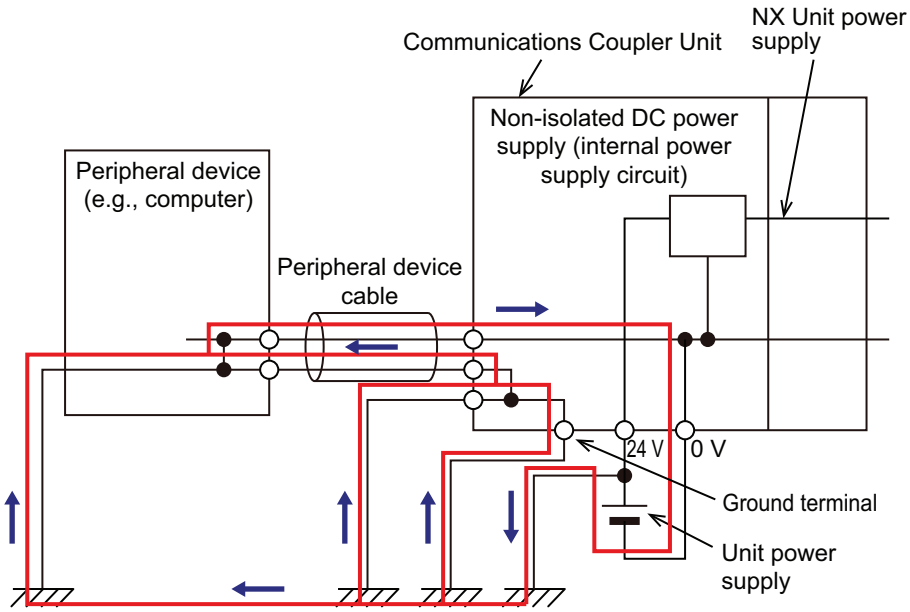

Be sure that all terminal screws and cable connector screws are tightened to the torque specified in the relevant manuals. The loose screws may result in fire or malfunction.

Online Editing

Execute online editing only after confirming that no adverse effects will be caused by deviations in the timing of I/O. If you perform online editing, the task execution time may exceed the task period, I/O may not be refreshed with external devices, input signals may not be read, and output timing may change.

Actual Operation

Set the parameters of the Temperature Control Unit correctly according to the controlled system. If the contents of the parameters and the controlled system are different, it could result in equipment damage or accidents due to unexpected operations.

Precautions for Safe Use

Transporting

- When transporting any Unit, use the special packing box for it.
  Also, do not subject the Unit to excessive vibration or shock during transportation.
- Do not drop any Unit or subject it to abnormal vibration or shock.
  Doing so may result in Unit malfunction or burning.

Mounting

- Mount terminal blocks and connectors only after checking the mounting location carefully.
- Be sure that the terminal blocks, expansion cables, and other items with locking devices are properly locked into place.

Installation

- Always turn OFF the power supply before installing the Unit. If the power supply is not OFF, the Unit may malfunction or may be damaged.
- Always turn OFF the Unit power supply and I/O power supply before you remove the NX Unit.
- Do not apply labels or tape to the Unit. When the Unit is installed or removed, adhesive or scraps may adhere to the pins in the NX bus connector, which may result in malfunctions.
- Do not touch the pins in the NX bus connector on the Unit. Dirt may adhere to the pins in the NX bus connector, which may result in malfunctions.

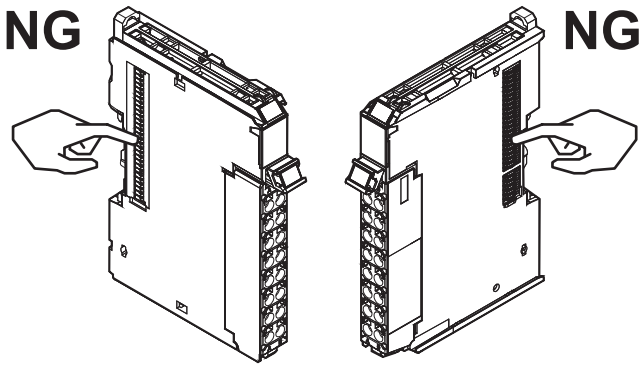

Example: NX Unit (12 mm width)

- Do not write on an NX Unit with ink within the restricted region that is shown in the following figure. Also do not get this area dirty. When the Unit is installed or removed, ink or dirt may adhere to the pins in the NX bus connector, which may result in malfunctions in the CPU Rack or the Slave Terminal.
  Refer to the user's manual for the connected CPU Unit or Communications Coupler Unit for the restricted region of CPU Unit and Communications Coupler Unit.

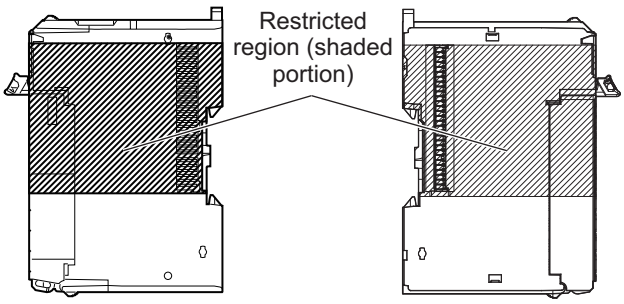

- For the installation orientations in the following figure, support the cables, e.g., with a duct, so that the End Plate on the bottom is not subjected to the weight of the cables. The weight of the cables may cause the bottom End Plate to slide downward so that the Slave Terminal is no longer secured to the DIN Track, which may result in malfunctions.

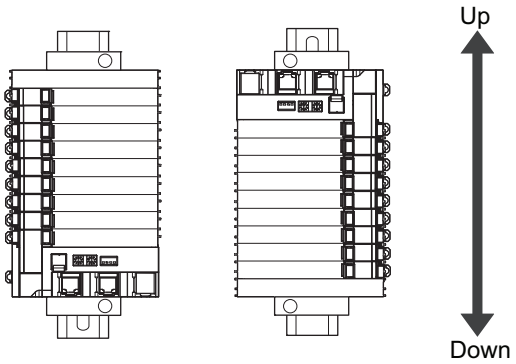

Wiring

- Double-check all switches and other settings and double-check all wiring to make sure that they are correct before turning ON the power supply.
  Use the correct wiring parts and tools when you wire the system.
- Do not pull on the cables or bend the cables beyond their natural limit. Also, do not place heavy objects on top of the cables or other wiring lines. Doing so may break the cable.
- When wiring or installing the Units, do not allow metal fragments to enter the Units.
- Do not press the flat-blade screwdriver straight into the release holes on a screwless clamping terminal block. Doing so may damage the terminal block.

NG **OK**

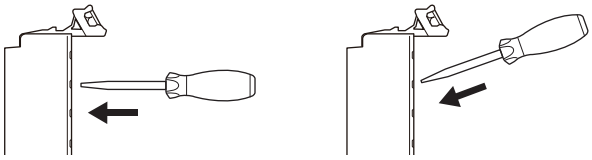

- When you insert a flat-blade screwdriver into a release hole on a screwless clamping terminal block, press it down with a force of 30N or less. Applying excessive force may damage the terminal block.
- Do not incline or twist the flat-blade screwdriver while it is in a release hole on a screwless clamping terminal block. Doing so may damage the terminal block.

NG **NG**

- When you change the allowable load resistance of the linear current output of the Temperature Control Unit, do not connect a load of 350 Ω or less. The Temperature Control Unit may malfunction due to internal heat generation.
- When checking the outputs using I/O checking, first check the method to turn OFF the outputs when temperature measurement is enabled.

Power Supply Design

- Use all Units within the I/O power supply ranges that are given in the specifications.
- For CPU Racks of NX-series CPU Units, the I/O power supply current should be less than or equal to the value specified for each type of CPU Unit. For example for an NX1P2 CPU Unit, the current consumption should be 4 A or less. Malfunction or damage may result in if any current outside the specification range is used. Refer to the user's manual of the CPU Unit to be connected for the I/O power supply current for each type of CPU Unit.
- Supply sufficient power according to the contents of this manual.
- Use the power supply voltage that is specified in this manual.
- Do not apply voltages that exceed the rated value to any Input Unit.
- Do not apply voltages or connect loads to the Output Units or slaves in excess of the maximum ratings.
- Inrush current occurs when the power supply is turned ON. When selecting fuses or breakers for external circuits, consider their fusing and detection characteristics as well as the above precautions and allow sufficient margin in shut-off performance.
- Install external breakers and take other safety measures against short-circuiting and overcurrents in external wiring.

Turning ON the Power Supply

- When you set the Operating Mode at Startup, confirm that no adverse effect will occur in the system.

Actual Operation

- Before you start operation, always register the NX Units that are connected to the Communications Coupler Unit in the host communications master as the Unit Configuration Information.
- Check the user program, data, and parameter settings for proper execution before you use them for actual operation.
- If you change the fail-soft operation setting, the output status when the error occurs may also change. Confirm safety before you change the fail-soft operation setting.
- If you use fail-soft operation, write programming to determine whether Unit I/O data is valid. Without such programming, the user program cannot distinguish between Units for which I/O refreshing is continued and Units for which I/O refreshing is stopped.
- To use adaptive control, turn ON the power of the load (e.g., heater) at the same time or before you turn on the Temperature Control Unit. Correct tuning and optimal control are not possible if the Temperature Control Unit power is turned ON before the load power.
- It takes 30 minutes of warm-up time for the measured value to stabilize after you turn ON the Temperature Control Unit. Start control after the warm-up period elapses.
- Ensure that the load power (e.g., heater) is ON during tuning. If the load power (e.g., heater) is not kept ON during tuning, tuning results will not be calculated correctly and it will not be possible to achieve optimum control.

Turning OFF the Power Supply

- Do not disconnect the cable or turn OFF the power supply to the Controller or a Slave Terminal when downloading data or the user program from the Support Software.
- Always turn OFF the external power supply to the Units before attempting any of the following.

  Mounting or removing an NX Unit, Communications Coupler Unit, CPU Unit, or Industrial PC
  Assembling Units
  Setting DIP switches or rotary switches
  Connecting or wiring cables
  Attaching or removing terminal blocks or connectors

  Units that supply power continue to supply power to the Units for up to several seconds after the power supply is turned OFF. The PWR indicator remains lit as long as power is supplied. Confirm that the PWR indicator is not lit before you perform any of the above.

Operation

- Confirm that the controlled system will not be adversely affected before you perform any of the following operations.

  Changing the operating mode of the CPU Unit or the Industrial PC (including changing the setting of the Operating Mode at Startup)
  Changing the user program or settings
  Changing set values or present values
  Forced refreshing
- Always sufficiently check the safety at the connected devices before you change the settings of a slave or Unit and restart them.
- If you transfer parameters for Unit operation settings that are updated when the Unit is restarted after the settings are changed on the Sysmac Studio, the Unit will be restarted after the transfer is completed. Always sufficiently check the safety at the connected devices before you transfer the Unit operation settings.

General Communications

- Do not exceed the ranges that are given in the specifications for the communications distance and number of connected Units.
- Refer to the user's manual for the Communications Coupler Unit for precautions for the safe use of communications with the connected Communications Coupler Unit.

Unit Replacement

- When you replace a Unit, start operation only after you transfer the settings and variables that are required for operation to the new Unit.

Disposal

- Dispose of the product according to local ordinances as they apply.

Handling the Cold Junction Sensor

- When you use Temperature Input Units that have cold junction sensors, do not remove the cold junction sensors. If the cold junction sensors are removed, you cannot measure the temperature correctly regardless of the cold junction compensation enable/disable setting.
- Use the cold junction sensor that was mounted at the time of delivery. The Temperature Control Unit and connected circuits are independently calibrated using the cold junction sensor provided. Correct temperature measurement is not possible if the cold junction sensor from another Unit is used or if the cold junction sensors are switched between multiple Units.

Using Heater Burnout Detection and SSR Failure Detection

- Before you perform wiring or maintenance work, always confirm that the power supply to the heater is turned OFF. If you provide power to the heater while the CT terminals are open, a high voltage will occur between the CT terminals, which creates an electric shock hazard.
- Use a CT that can be connected to the Temperature Control Unit. If you use any other CTs, the current values may not be accurate. This could result in failure to detect heater burnout or SSR failure. Also, if a SSR failure current is not detected, damage to equipment could result.

Precautions for Correct Use

Storage, Mounting, and Wiring

- Follow the instructions in this manual to correctly perform installation and wiring.
- Do not operate or store the Units in the following locations. Doing so may result in malfunction, in operation stopping, or in burning.

  Locations subject to direct sunlight
  Locations subject to temperatures or humidity outside the range specified in the specifications
  Locations subject to condensation as the result of severe changes in temperature
  Locations subject to corrosive or flammable gases
  Locations subject to dust (especially iron dust) or salts
  Locations subject to exposure to water, oil, or chemicals
  Locations subject to shock or vibration
- Take appropriate and sufficient countermeasures during installation in the following locations.

  Locations subject to strong, high-frequency noise
  Locations subject to static electricity or other forms of noise
  Locations subject to strong electromagnetic fields
  Locations subject to possible exposure to radioactivity
  Locations close to power lines
- Before touching a Unit, be sure to first touch a grounded metallic object in order to discharge any static build-up.
- Use the rated power supply voltage for the Units that supply power. Take appropriate measures to ensure that the specified power with the rated voltage and frequency is supplied in places where the power supply is unstable.
- Install the Units away from sources of heat and ensure proper ventilation. Not doing so may result in malfunction, in operation stopping, or in burning.
- Do not allow foreign matter to enter the openings in the Unit. Doing so may result in Unit burning, electric shock, or failure.

Actual Operation

- If you change the event level of an error, the output status when the error occurs may also change. Confirm safety before you change an event level.

Turning OFF the Power Supply

- Do not turn OFF the power supply while data is being transferred.
- Do not turn OFF the power supply while parameters are being written to the CPU Unit, the Communications Coupler Unit or NX Units.

General Communications

- Refer to the user's manual for the Communications Coupler Unit for precautions for the correct use of communications with the connected Communications Coupler Unit.

Regulations and Standards

Conformance to EU Directives

Applicable Directives

- EMC Directives
- Low Voltage Directive

Concepts

EMC Directives

OMRON devices that comply with EU Directives also conform to the related EMC standards so that they can be more easily built into other devices or the overall machine. The actual products have been checked for conformity to EMC standards.*1

Whether the products conform to the standards in the system used by the customer, however, must be checked by the customer. EMC-related performance of the OMRON devices that comply with EU Directives will vary depending on the configuration, wiring, and other conditions of the equipment or control panel on which the OMRON devices are installed. The customer must, therefore, perform the final check to confirm that devices and the overall machine conform to EMC standards.

*1. Applicable EMC (Electromagnetic Compatibility) standards are as follows:
EMS (Electromagnetic Susceptibility): EN 61131-2
EMI (Electromagnetic Interference): EN 61131-2 (Radiated emission: 10-m regulations).

Low Voltage Directive

Always ensure that devices operating at voltages of 50 to 1,000 VAC and 75 to 1,500 VDC meet the required safety standards. The applicable directive is EN 61010-2-201.

Conformance to EU Directives

The NX-series Units comply with EU Directives. To ensure that the machine or device in which the NX-series Units are used complies with EU Directives, the following precautions must be observed.

- The NX-series Units must be installed within a control panel.
- You must use SELV power supply for the DC power supplies that are connected as the Unit power supplies and I/O power supplies for the NX-series Units.

  Compliance with the EMC standard has been confirmed using the recommended Power Supplies. Refer to the user's manual for the connected CPU Unit for information on the recommended Power Supplies for a CPU Rack with an NX-series CPU Unit. We recommend that you use the OMRON S8VK-S Series Power Supplies to connect a Temperature Control Unit on a Slave Terminal.
- NX-series Units that comply with EU Directives also conform to the Common Emission Standard (EN 61131-2). Radiated emission characteristics (10-m regulations) may vary depending on the configuration of the control panel used, other devices connected to the control panel, wiring, and other conditions.

  You must therefore confirm that the overall machine or equipment in which the NX-series Units are used complies with EU Directives.
- You must use power supplies with an output hold time of 10 ms or longer for the DC power supplies that are connected as the Unit power supplies and I/O power supplies for the NX-series Units.

- This is a Class A product (for industrial environments). In a residential environment, it may cause radio interference. If radio interference occurs, the user may be required to take appropriate measures.

Conformance Requirement to EU Directives

The immunity test conditions for the NX-series Temperature Control Units are as follows:

Unit Type	Conversion time	Overall accuracy
Temperature Control Units	50 ms per Unit	+5% / -5%

The conformity is confirmed when the cable length between the Temperature Control Unit and any connected external device is 30 m or less.

Conformance to UL and CSA Standards

Some NX-series products comply with UL and CSA standards. If you use an NX-series product that complies with UL or CSA standards and the machinery or system in which you use the NX-series product must also comply with the standards, refer to the *Instruction Sheet* that is provided with the product. The *Instruction Sheet* provides the application conditions for complying with the standards.

Conformance to KC Standards

Observe the following precaution if you use NX-series Units in Korea.

A 급 기기 (업무용방송통신기자재)
이 기기는 업무용(A 급) 전저파작합기기로서 판매자
또는 사용자는 이 점을 주의하시기 바라며, 가정외의
지역에서 사용하는 것을 목적으로 합니다.

Class A Device (Broadcasting Communications Device for Office Use)

This device obtained EMC registration for office use (Class A), and it is intended to be used in places other than homes.

Sellers and/or users need to take note of this.

Software Licenses and Copyrights

This product incorporates certain third party software. The license and copyright information associated with this software is available at http://www.fa.omron.co.jp/nj_info_e/.

Unit Versions

This section describes the notation that is used for unit versions, the confirmation method for unit versions, and the relationship between unit versions and Support Software versions.

Unit Versions

A “unit version” has been introduced to manage the Units in the NX Series according to differences in functionality accompanying Unit upgrades.

An example is provided below for Slave Terminals. For the notation that is used for the unit versions of CPU Units or Industrial PCs and the confirmation method for unit versions, refer to the user's manual for each Unit.

Notation of Unit Versions on Products

The unit version is given with the Unit specifications on the side of the Unit or in the notched area.

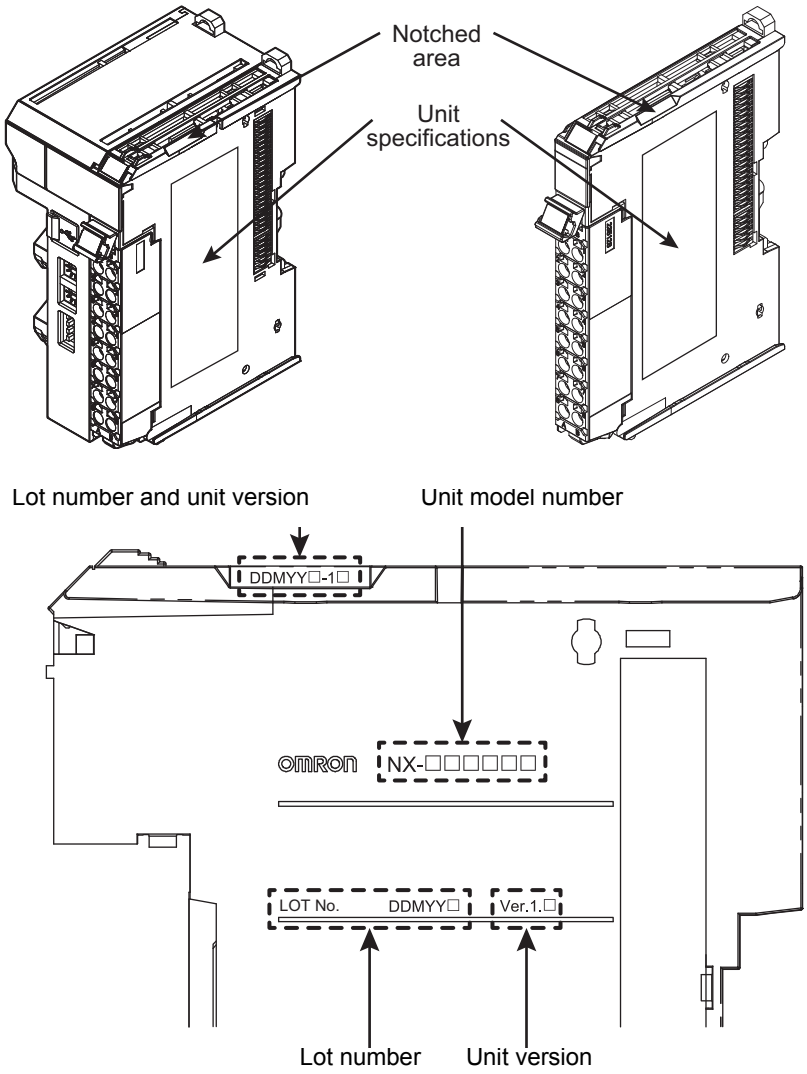

The following information is provided in the Unit specifications on the Unit.

Name	Function
Unit model number	Gives the model of the Unit.
Unit version	Gives the unit version of the Unit.
Lot number	Gives the lot number of the Unit. DDMYY□: Lot number, □: Used by OMRON. “M” gives the month (1 to 9: January to September, X: October, Y: November, Z: December)

The following information is provided in the notched area on the Unit.

Name	Function
Lot number and unit version	Gives the lot number and unit version of the Unit. • DDMYY□: Lot number, □: Used by OMRON. “M” gives the month (1 to 9: January to September, X: October, Y: November, Z: December) • 1□: Unit version The decimal portion of the unit version is omitted. (It is provided in the Unit specifications.)

Confirming Unit Versions with the Support Software

If your NX Unit is connected to a CPU Unit, refer to the user’s manual of the connected CPU Unit for the confirmation method for the unit version of the NX Unit.

If your NX Unit is connected to a Communications Coupler Unit, refer to the user’s manual of the connected Communications Coupler Unit for the confirmation method for the unit version of the Communications Coupler Unit and NX Unit.

Unit Versions and Support Software Versions

The functions that are supported depend on the unit version of the Unit. The version of Support Software that supports the functions that were added for an upgrade is required to use those functions.

Refer to *A-6 Version Information with CPU Units* on page A-122 or *A-7 Version Information with Communications Coupler Units* on page A-125 for the functions that are supported by each unit version.

Related Manuals

The following table shows related manuals. Use these manuals for reference.

Manual name	Cat. No.	Model numbers	Application	Description
NX-series Temperature Control Units User's Manual	H228	NX-TC□□□□	Learning how to use NX-series Temperature Control Units.	The hardware, setup methods, and functions of the NX-series Temperature Control Units are described.
NX-series Data Reference Manual	W525	NX-□□□□□□	Referencing lists of the data that is required to configure systems with NX-series Units	Lists of the power consumptions, weights, and other NX Unit data that is required to configure systems with NX-series Units are provided.
NX-series System Units User's Manual	W523	NX-PD1□□□ NX-PF0□□□ NX-PC0□□□ NX-TBX01	Learning how to use NX-series System Units	The hardware and functions of the NX-series System Units are described.
Sysmac Studio Version 1 Operation Manual	W504	SYSMAC-SE2□□□	Learning about the operating procedures and functions of the Sysmac Studio	Describes the operating procedures of the Sysmac Studio.
NX-IO Configurator Operation Manual	W585	CXONE-AL□□D-V4	Learning about the operating procedures and functions of the NX-IO Configurator.	Describes the operating procedures of the NX-IO Configurator.
NJ/NX-series Troubleshooting Manual	W503	NX701-□□□□ NJ501-□□□□ NJ301-□□□□ NJ101-□□□□ NX1P2-□□□□	Learning about the errors that may be detected in an NJ/NX-series Controller	Concepts on managing errors that may be detected in an NJ/NX-series Controller and information on individual errors are described.
NY-series Troubleshooting Manual	W564	NY532-□□□□ NY512-□□□□	Learning about the errors that may be detected in an NY-series Industrial PC	Concepts on managing errors that may be detected in an NY-series Controller and information on individual errors are described.
NX-series EtherCAT® Coupler Unit User's Manual	W519	NX-ECC20□	Learning how to use an NX-series EtherCAT Coupler Unit and EtherCAT Slave Terminals	The following items are described: the overall system and configuration methods of an EtherCAT Slave Terminal (which consists of an NX-series EtherCAT Coupler Unit and NX Units), and information on hardware, setup, and functions to set up, control, and monitor NX Units through EtherCAT.
NX-series EtherNet/IP™ Coupler Unit User's Manual	W536	NX-EIC202	Learning how to use an NX-series EtherNet/IP Coupler Unit and EtherNet/IP Slave Terminals	The following items are described: the overall system and configuration methods of an EtherNet/IP Slave Terminal (which consists of an NX-series EtherNet/IP Coupler Unit and NX Units), and information on hardware, setup, and functions to set up, control, and monitor NX Units.

Manual name	Cat. No.	Model numbers	Application	Description
NX-series CPU Unit Hardware User's Manual	W535	NX701-□□□□	Learning the basic specifications of the NX-series NX701 CPU Units, including introductory information, designing, installation, and maintenance. Mainly hardware information is provided.	An introduction to the entire NX701 CPU Unit system is provided along with the following information on the CPU Unit. • Features and system configuration • Overview • Part names and functions • General specifications • Installation and wiring • Maintenance and inspection
NX-series NX1P2 CPU Unit Hardware User's Manual	W578	NX1P2-□□□□	Learning the basic specifications of the NX-series NX1P2 CPU Units, including introductory information, designing, installation, and maintenance. Mainly hardware information is provided.	An introduction to the entire NX1P2 CPU Unit system is provided along with the following information on the CPU Unit. • Features and system configuration • Overview • Part names and functions • General specifications • Installation and wiring • Maintenance and inspection
NJ-series CPU Unit Hardware User's Manual	W500	NJ501-□□□□ NJ301-□□□□ NJ101-□□□□	Learning the basic specifications of the NJ-series CPU Units, including introductory information, designing, installation, and maintenance. Mainly hardware information is provided.	An introduction to the entire NJ-series system is provided along with the following information on the CPU Unit. • Features and system configuration • Overview • Part names and functions • General specifications • Installation and wiring • Maintenance and inspection
NY-series IPC Machine Controller Industrial Panel PC Hardware User's Manual	W557	NY532-□□□□	Learning the basic specifications of the NY-series Industrial Panel PCs, including introductory information, designing, installation, and maintenance. Mainly hardware information is provided.	An introduction to the entire NY-series system is provided along with the following information on the Industrial Panel PC. • Features and system configuration • Introduction • Part names and functions • General specifications • Installation and wiring • Maintenance and inspection

Manual name	Cat. No.	Model numbers	Application	Description
NY-series IPC Machine Controller Industrial Box PC Hardware User's Manual	W556	NY512-□□□□	Learning the basic specifications of the NY-series Industrial Box PCs, including introductory information, designing, installation, and maintenance. Mainly hardware information is provided.	An introduction to the entire NY-series system is provided along with the following information on the Industrial Box PC. • Features and system configuration • Introduction • Part names and functions • General specifications • Installation and wiring • Maintenance and inspection
NJ/NX-series CPU Unit Software User's Manual	W501	NX701-□□□□ NJ501-□□□□ NJ301-□□□□ NJ101-□□□□ NX1P2-□□□□	Learning how to program and set up an NJ/NX-series CPU Unit. Mainly software information is provided.	The following information is provided on an NJ/NX-series CPU Unit. • CPU Unit operation • CPU Unit features • Initial settings • Programming based on IEC 61131-3 language specifications
NY-series IPC Machine Controller Industrial Panel PC / Industrial Box PC Software User's Manual	W558	NY532-□□□□ NY512-□□□□	Learning how to program and set up the Controller functions of an NY-series Industrial PC	The following information is provided on NY-series Machine Automation Control Software. • Controller operation • Controller features • Controller settings • Programming based on IEC 61131-3 language specifications
NJ/NX-series CPU Unit Built-in EtherCAT® Port User's Manual	W505	NX701-□□□□ NJ501-□□□□ NJ301-□□□□ NJ101-□□□□ NX1P2-□□□□	Using the built-in EtherCAT port on an NJ/NX-series CPU Unit	Information on the built-in EtherCAT port is provided. This manual provides an introduction and provides information on the configuration, features, and setup.
NY-series IPC Machine Controller Industrial Panel PC / Industrial Box PC Built-in EtherCAT® Port User's Manual	W562	NY532-□□□□ NY512-□□□□	Using the built-in EtherCAT port on an NY-series Industrial PC	Information on the built-in EtherCAT port is provided. This manual provides an introduction and provides information on the configuration, features, and setup.
NJ/NX-series Instructions Reference Manual	W502	NX701-□□□□ NJ501-□□□□ NJ301-□□□□ NJ101-□□□□ NX1P2-□□□□	Learning detailed specifications on the basic instructions of an NJ/NX-series CPU Unit	The instructions in the instruction set (IEC 61131-3 specifications) are described.
NY-series Instructions Reference Manual	W560	NY532-□□□□ NY512-□□□□	Learning detailed specifications on the basic instructions of an NY-series Industrial PC	The instructions in the instruction set (IEC 61131-3 specifications) are described.

Terminology

Term	Abbreviation	Description
2-PID control	---	A PID control method that simultaneously achieves two characteristics, set point tracking and disturbance suppression.
application layer status, AL status	---	Status for indicating information on errors that occur in an application on a slave.
autotuning	AT	A tuning method that derives the PID constant. It uses the limit cycle method to automatically calculates the PID constant corresponding to the characteristics of the control target.
bumpless	---	The function by which the MV immediately before the switching is inherited during switching from Manual Mode to Auto Mode.
CAN application protocol over EtherCAT	CoE	A CAN application protocol service implemented on EtherCAT.
CAN in Automation	CiA	CiA is the international users' and manufacturers' group that develops and supports higher-layer protocols.
channel	ch	The unit of the temperature control loop in the Temperature Control Unit.
Communications Coupler Units	---	The generic name of an interface Unit for remote I/O communications on a network between NX Units and a host network master.
CT	CT	An acronym for current transformer. A CT is a current sensor that performs non-contact measurement of alternating currents.
CPU Rack	---	A rack to which a CPU Unit is mounted. For an NX-series CPU Unit to which NX Units can be connected, a CPU Rack refers to a configuration which consists of the CPU Unit, NX Units, and End Covers.
DC time	---	Time indicated by the clock shared between the CPU Unit and the NX Units in a CPU Rack with an NX-series CPU Unit to which NX Units can be connected. EtherCAT slaves that support distributed clock synchronization have a clock that is shared by all slaves in the network. The time that is based on this distributed clock is called the DC time. The same clock is shared by the CPU Unit, NX Units connected to the CPU Unit, and applicable EtherCAT slaves.
device profile	---	A collection of device dependent information and functionality providing consistency between similar devices of the same device type.
device variable	---	A variable that is used to access a specific device through an I/O port by an NJ/NX-series CPU Unit or NY-series Industrial PC. Process data on an EtherCAT slave is allocated to this variable. With an NX-series CPU Unit to which NX Units can be connected, I/O data is assigned to NX Units in the CPU Unit. A user application on a CPU Unit or Industrial PC accesses a device that can be connected, by directly reading and writing this device variable.
distributed clock	DC	Clock distribution mechanism used to synchronize EtherCAT slaves and the EtherCAT master.
EtherCAT slave controller	ESC	A controller for EtherCAT slave communications.
EtherCAT slave information	ESI	An XML file that contains setting information for an EtherCAT slave.
EtherCAT state machine	ESM	An EtherCAT communications state machine.
EtherCAT Technology Group	ETG	The ETG is a global organization in which OEM, end users, and technology providers join forces to support and promote the further technology development.
heating and cooling control type	---	The control type of a Temperature Control Unit that controls both heating and cooling by two outputs per channel.
hunting	---	The phenomenon in which the measured value oscillates around the set point after reaching the set point.
I/O map settings	---	Settings that assign variables to I/O ports. Assignment information between I/O ports and variables.

Term	Abbreviation	Description
I/O port	---	A logical interface that is used by the NJ/NX-series CPU Unit or NY-series Industrial PC to exchange data with an external device (slave or Unit).
I/O refreshing	---	Cyclic data exchange with external devices that is performed with predetermined memory addresses.
index	---	Address of an object within an application process.
linear current output	---	Current output of continuous value.
Loop Burnout Alarm	LBA	A function by which an alarm is output indicating an error somewhere in the control loop when the deviation (Set point - Measured value) does not change by a fixed width (LBA detection width) within a fixed time.
manipulated variable	MV	A variable used to change the control level of a control target to reach a set point.
measured value	PV	A measured current temperature in the Temperature Control Unit.
network configuration information	---	The EtherCAT network configuration information held by the EtherCAT master.
NX bus	---	The NX-series internal bus.
object	---	An abstract representation of a particular component within a device, which consists of data, parameters, and methods.
object dictionary	OD	Data structure that contains description of data type objects, communication objects and application objects.
Operational	---	A state in which I/O refresh communications and NX message communications are possible between the communications master and the Communications Coupler Unit or NX Units.
overshooting	---	A state where the process value exceeds the set point after reaching it.
PDO communications	---	An acronym for process data communications.
Pre-Operational	---	A state in which NX message communications are possible between the communications master and the Communications Coupler Unit or NX Units, but I/O refresh communications are not possible.
primary periodic task	---	The task with the highest priority.
process data	---	Collection of application objects designated to be downloaded cyclically or acyclically for the purpose of measurement and control.
process data communications	---	One type of EtherCAT communications in which process data objects (PDOs) are used to exchange information cyclically and in realtime. This is also called PDO communications.
process data object	PDO	A structure that describes the mappings of parameters that have one or more process data entities.
receive PDO	RxPDO	A process data object received by an EtherCAT slave.
Safe-Operational	---	A state in which input refresh communications and NX message communications are possible between the communications master and the Communications Coupler Unit or NX Units, but output refresh communications are not possible.
SDO communications	---	One type of EtherCAT communications in which service data objects (SDOs) are used to transmit information whenever required.
service data object	SDO	CoE asynchronous mailbox communications where all objects in the object dictionary can be read and written.
set point	SP	The target control amount of feedback control.
Slave Information Interface	SII	Slave information that is stored in non-volatile memory in the slave.
Slave Terminal	---	A building-block remote I/O terminal to which a Communications Coupler Unit and NX Units are mounted
SSR	SSR	An acronym for solid-state relay. An SSR is a relay that does not have contacts.
standard control type	---	The control type of a Temperature Control Unit that controls either heating or cooling by one output per channel.
subindex	---	Sub-address of an object within the object dictionary.

Term	Abbreviation	Description
Sync0	---	A signal that gives the interrupt timing based on the distributed clock (DC) in EtherCAT communications. The slaves execute controls according to this interrupt timing.
Sync Manager	SM	Collection of control elements to coordinate access to concurrently used objects.
system fluctuation	---	Temperature variation within and outside the temperature control loop. Example 1: Deterioration of devices such as the heater Example 2: Seasonal changes in the ambient temperature
system performance evaluation	---	One of the operations of adaptive control function of the Temperature Control Unit. The temperature-rise performance is evaluated by the inclination during the rise in temperature. The system performance is evaluated each time the temperature rises, and the evaluation result is used to determine whether a system fluctuation has occurred.
task period	---	The interval at which the primary periodic task or a periodic task is executed.
temperature control loop	---	A feedback control loop including a temperature input sensor, a controller, and an output device such as the heater.
time-proportional output	---	The function that controls the control output with the supplied manipulated variable as a duty ratio.
transmit PDO	TxPDO	A process data object sent from an EtherCAT slave.
voltage output for driving SSR	---	A voltage output used to drive an SSR.

Revision History

A manual revision code appears as a suffix to the catalog number on the front and back covers of the manual.

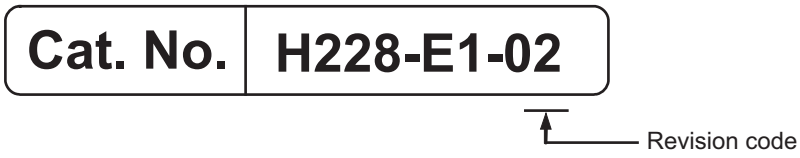

Revision code	Date	Revised content
01	January 2018	Original production
02	April 2018	• Made changes accompanying the upgrade to unit version 1.1. • Corrected mistakes.

Sections in this Manual

1 Features and System Configuration

2 Specifications and Application Procedures

3 Part Names and Functions

4 Installation and Wiring

5 I/O Refreshing

6 I/O Data Specifications and Lists of Settings

7 Functions

8 Troubleshooting

9 Inspection and Maintenance

A Appendices

I Index

1

Features and System Configuration

This section describes the NX system configuration and the types of Temperature Control Units.

1-1 Features 1-2

1-1-1 Common Features of Temperature Control Units 1-2

1-1-2 Features of Standard Control Type 1-4

1-1-3 Features of Heating/Cooling Control Type 1-5

1-2 System Configuration 1-6

1-2-1 System Configuration in the Case of a CPU Unit 1-6

1-2-2 System Configuration of Slave Terminals 1-7

1-3 Temperature Control System and Application Examples 1-9

1-3-1 Temperature Control System 1-9

1-3-2 Application Examples 1-13

1-3-3 Overview of the Data in the Temperature Control Unit and the Access Method 1-14

1-4 Model List 1-17

1-4-1 Model Notation 1-17

1-4-2 Model List 1-18

1-5 List of Functions 1-19

1-6 Support Software 1-22

1-1 Features

The Temperature Control Unit receives signals from the temperature sensor and controls the heater temperature to match the set temperature. The temperature sensor can be a thermocouple or resistance thermometer. A model with CT inputs has functions to monitor the CT current value and to detect a heater burnout or SSR failures.

NX-series Temperature Control Units have the following features.

1-1-1 Common Features of Temperature Control Units

Can be Connected to a CPU Unit or Communications Coupler Unit

Temperature Control Units can be connected to the following Units.*1

- NX-series CPU Unit
- NX-series Communications Coupler Unit

When a CPU Unit and a Communications Coupler Unit are used together, you can unify the methods for installing, wiring, and setting up NX Units, and eventually reduce design costs.

Example:

NX-series NX1P2 CPU Unit

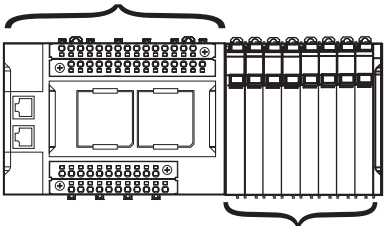

NX Units: NX-series Temperature Control Units

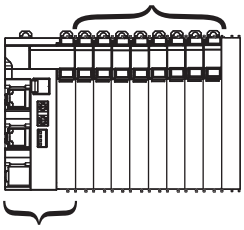

NX-series EtherCAT Coupler Unit

*1. For whether NX Units can be connected to the CPU Unit or Communications Coupler Unit to be used, refer to the user's manual for the CPU Unit or Communications Coupler Unit to be used.

No Need to Create a Specific User Program for Temperature Control

Using the Temperature Control Unit makes it unnecessary to create a user program for temperature control, such as PID operation and time-proportional output, with the CPU Unit or Industrial PC. The Temperature Control Unit receives the measured values and controls the manipulated variable to reach the set point.

Simple I/O Wiring with a Screwless Clamping Terminal Block

The terminal block is a screwless clamping terminal block.

You can connect the wires simply by pushing the ferrules into the terminals. The amount of wiring work is reduced without requiring the use of screws.

Other features

- Some models can control up to 4 channels with one Temperature Control Unit.
- The input type can be set independently for each channel. Select one input type from 16 kinds of thermocouple and 4 types of resistance thermometer.
- You can select either ON/OFF control or PID control.
- You can specify the manipulated variable to output.
- A preset manipulated variable can be output when a Sensor Disconnected Error occurs.
- You can select whether to continue control using a preset operation or to output a preset manipulated variable when a communication error occurs with the CPU Unit or Communications Coupler Unit.
- A limit can be applied to the output manipulated variable.
- The following two output types are available.
  a) Voltage output (for driving SSR)
  b) Linear current output

  For the Units with voltage output (for driving SSR), the simultaneous output limit function is provided to prevent simultaneous output of multiple channels. This function limits the peak current of the entire actuator. For linear current output, the output signal range can be set to "4 to 20 mA" or "0 to 20 mA", depending on the actuator that is connected to output terminal.
- You can set the number of digits to display after the decimal point for INT-type measured values and INT-type set point parameters.
- As a result of MV Branch, the manipulated variables of a channel can be output to other channels.*1
- A temperature alarm can be detected.*1
- Adjustment parameters such as PID constants can be changed in the I/O data.*1

*1. When a Temperature Control Unit with unit version 1.1 or later is used

1-1-2 Features of Standard Control Type

Special Temperature Sensors for Packing Machines and Automatic Filter Adjustment Can Ease Temperature Problems on the Machines

By using temperature sensors that are specialized for packing machines and the automatic filter adjustment function of Temperature Control Units, you can restrict temperature variance on the packing machine and maintain stable operations.

● Actual temperature measurement using a temperature sensor for packing machines

The packing machine temperature is normally controlled by measuring the temperature of the heater that is remote from the seal. This can result in a difference between the temperature of the seal and the temperature of the heater, which can lead to sealing faults. To solve this problem, the temperature sensor for packing machines (E52-CA□□AF D=1 S□, sold separately) can be used to measure the actual temperature of the seal. Using this temperature sensor reduces the above sealing faults caused by the temperature difference.

● Suppressing temperature variations with the automatic filter adjustment function

In controlling the temperature of a packing machine, temperature variations can occur due to periodic disturbances and other factors. To handle this issue, the automatic filter adjustment function of the Temperature Control Unit can be used to suppress the temperature variations due to periodic disturbances and other factors. Particularly when using the temperature sensor for packing machines described above, the effect of packing material heat increases and causes significant periodic temperature variations. However, the automatic filter adjustment function can be used to achieve stable control.

We recommend that you use the automatic filter adjustment function in the following cases.

- If temperature variation occurs even if AT (autotuning) is performed while temperature sensors for packing machines are used.
- If temperature variation occurs after a heater is replaced
- If temperature variation occurs after packing materials are changed or the packing speed is changed
- If temperature variation occurs due to changes in the operating environment

This function is not available when ON/OFF control is used.

Adaptive control can maintain optimum temperature control

Adaptive control is a control method that helps to maintain optimum temperature control by following any changes that may occur due to system fluctuations, such as changes in the environment or equipment deterioration. When adaptive control is used, AT (autotuning) is required only the first time operation is performed. After that, the Temperature Control Unit monitors the equipment startup temperature to detect system fluctuations and update the PID constant for adaptive control. Repeating AT and manual adjustment of the PID constant are not required and higher temperature control performance is achieved than is possible using AT alone.

We recommend that you use adaptive control function in the following cases.

- To reduce decline in control performance caused by environmental changes or equipment deterioration
- To increase control performance over AT

You cannot use this function when the direct operation is set for the direct/reverse operation.

1-1-3 Features of Heating/Cooling Control Type

Water-cooling Output Adjustment Can Reduce Temperature Control Difficulties Caused by Water-cooled Extruders

This function mainly suppresses temperature variations in water-cooled extruders to maintain stable performance. When hunting occurs in heating/cooling control of water-cooled extruders, it was previously necessary to have an operator skilled in PID adjustment or water-cooled valve adjustment adjust the system. To handle this issue, the water-cooling output adjustment function can be used to automatically adjust the cooling proportional band on the cooling side to suppress temperature hunting.
As adjustment is performed during operation, optimum control can be maintained even if the material condition changes.

We recommend that you use water cooling output adjustment function in the following cases.

- If temperature variation occurs due to changes in the water-cooling system
- If temperature variation occurs due to changes in the cooling valve settings
- To reduce the amount of work required to adjust cooling valves

This function cannot be used if water cooling is not selected for the tuning method of heating and cooling, or if direct operation is not selected in the direct/reverse operation.

1-2 System Configuration

NX Unit NX-series Temperature Control Units can be connected to the following Units.

- NX-series CPU Unit
- NX-series Communications Coupler Unit

This section describes the system configuration for each connection of the NX Unit.

1-2-1 System Configuration in the Case of a CPU Unit

The following figure shows a system configuration when a group of NX Units is connected to an NX-series NX1P2 CPU Unit. You can connect the EtherCAT Slave Terminal to the built-in EtherCAT port on the CPU Unit. Refer to *1-2-2 System Configuration of Slave Terminals* on page 1-7 for details on the system configuration of a Slave Terminal.

Refer to the user's manual for the connected CPU Unit for details on how to configure the system when the CPU Unit used is not an NX1P2 CPU Unit.

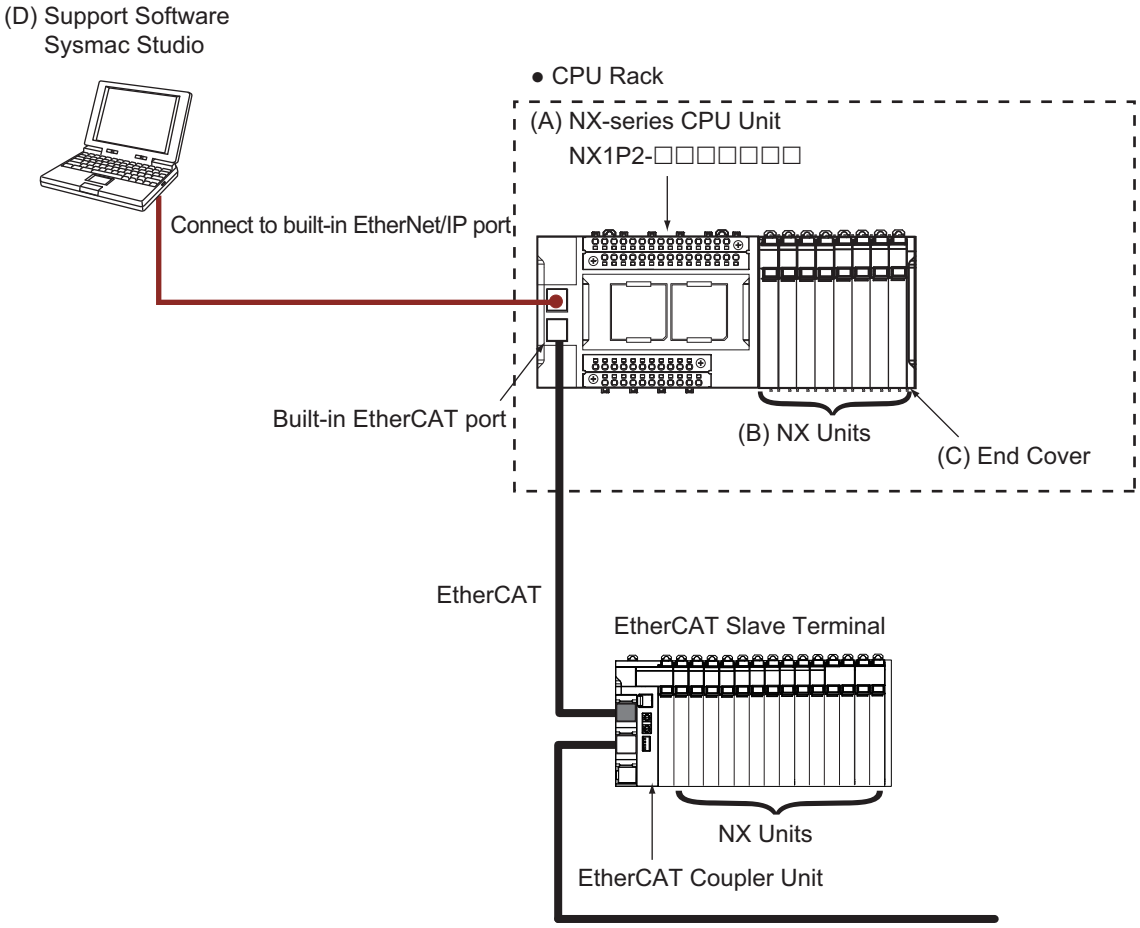

Symbol	Item	Description
(A)	NX-series CPU Unit	The Unit that serves as the center of control for a Machine Automation Controller. It executes tasks, refreshes I/O for other Units and slaves, etc. NX Units can be connected to an NX1P2 CPU Unit.
(B)	NX Units	The NX Units perform I/O processing with connected external devices. The NX Units exchange data with the CPU Unit through I/O refreshing. A maximum of eight NX Units can be connected to an NX1P2 CPU Unit.
(C)	End Cover	The End Cover is attached to the end of a CPU Rack.

Symbol	Item	Description
(D)	Support Software (Sysmac Studio)	A computer software application for setting, programming, debugging, and troubleshooting NJ/NX/NY-series Controllers. For an NX1P2 CPU Unit, this application performs setting operation by making a connection to a built-in EtherNet/IP port.

1-2-2 System Configuration of Slave Terminals

A building-block remote I/O slave provided with a group of NX Units connected to a Communications Coupler Unit is generically called a Slave Terminal.

The NX Units can be flexibly combined with a Communications Coupler Unit to achieve the optimum remote I/O slave for the application with less wiring, less work, and less space.

The following figure shows an example of the system configuration when an EtherCAT Coupler Unit is used as a Communications Coupler Unit.

Refer to the user's manual for the connected Communications Coupler Unit for details on how to configure the system when any other type of Communications Coupler Unit is used.

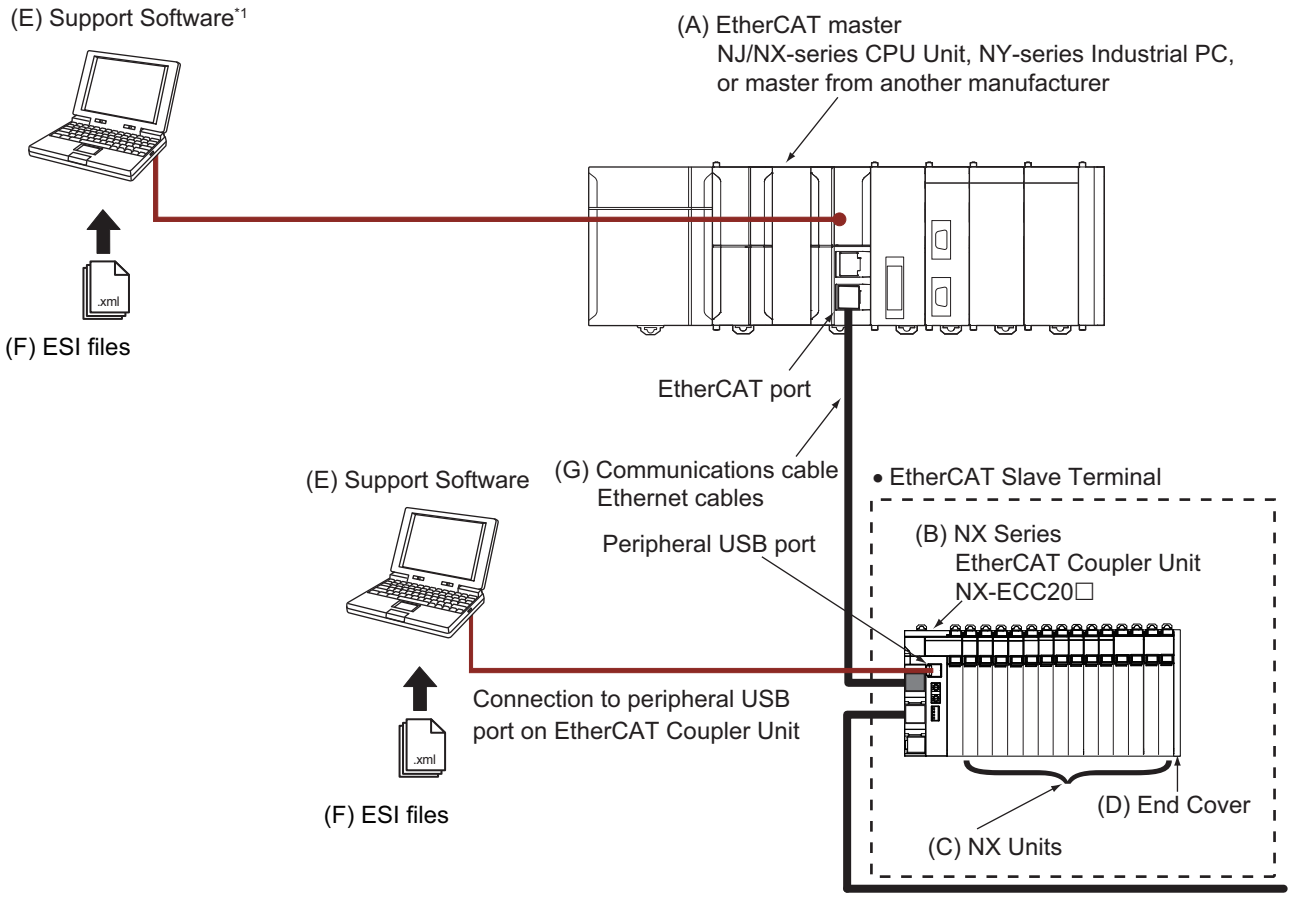

*1. The connection method for the Support Software depends on the model of the CPU Unit or Industrial PC.

Letter	Item	Description
(A)	EtherCAT master *1	The EtherCAT master manages the network, monitors the status of slaves, and exchanges I/O data with slaves.
(B)	EtherCAT Coupler Unit	The EtherCAT Coupler Unit serves as an interface for process data communications on the EtherCAT network between the NX Units and the EtherCAT master. The I/O data for the NX Units is accumulated in the EtherCAT Coupler Unit and then all of the data is exchanged with the EtherCAT master at the same time. The EtherCAT Coupler Unit can also perform message communications (SDO communications) with the EtherCAT master.
(C)	NX Units	The NX Units perform I/O processing with connected external devices. The NX Units perform process data communications with the EtherCAT master through the EtherCAT Coupler Unit.
(D)	End Cover	The End Cover is attached to the end of the Slave Terminal.
(E)	Support Software *2 *3	The Sysmac Studio runs on a personal computer and it is used to configure the EtherCAT network and EtherCAT Slave Terminal, and to program, monitor, and troubleshoot the Controllers.
(F)	ESI (EtherCAT Slave Information) file	The ESI files contain information that is unique to the EtherCAT Slave Terminals in XML format. You can load an ESI file into the Support Software to easily allocate Slave Terminal process data and make other settings. The ESI files for OMRON EtherCAT slaves are installed in the Support Software. You can obtain the ESI files for the latest models through the Support Software's automatic update function.
(G)	Communications cable	Use a double-shielded cable with aluminum tape and braiding of Ethernet category 5 (100Base-TX) or higher, and use straight wiring.

*1. An EtherCAT Slave Terminal cannot be connected to any of the OMRON CJ1W-NC□81/□82 Position Control Units even though they can operate as EtherCAT masters.

*2. The term Support Software indicates software that is provided by OMRON. If you connect to a master from another company, use the software tool corresponding to that master.

*3. Refer to *1-6 Support Software* on page 1-22 for information on Support Software.

1-3 Temperature Control System and Application Examples

This section explains the temperature control system that combines a Temperature Control Unit with a CPU Unit or Industrial PC and gives application examples. It also gives an overview of the data types and the method to access the Temperature Control Unit.

1-3-1 Temperature Control System

The temperature control system can be configured by combining a Temperature Control Unit with a CPU Unit or Industrial PC. The Temperature Control Unit controls the temperature according to the set points and operation commands provided by the CPU Unit or Industrial PC. Furthermore, a model with CT inputs detects heater burnout and SSR failures, and notifies the CPU Unit and Industrial PC. The CPU Unit or Industrial PC processes alarm outputs in response to these notifications to prevent the creation of defective products or damage to the machine. The role and operation of each Unit is described below according to where it is connected to. The description is based on a Temperature Control Unit with CT inputs.

Connected to a CPU Unit

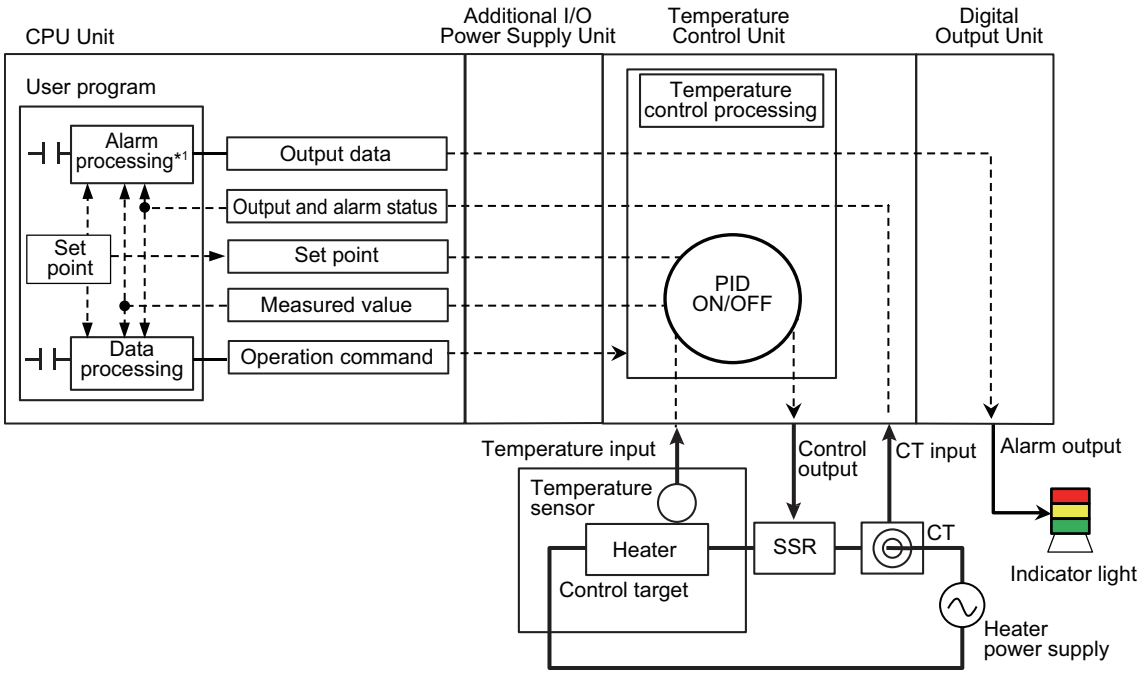

*1. When you use a temperature alarm function supported by a Temperature Control Unit with unit version 1.1 or later, the alarm processing results are notified by the output/alarm status. Therefore, there is no need to perform the alarm processing in the user program based on the set point and measured value.

Roles of each Unit

The roles of the Units are as follows:

Unit name	Function
CPU Unit	The CPU Unit runs the following user programs. • Set points and operation commands to Temperature Control Unit • Data processing of measured values and statuses from the Temperature Control Unit, and alarm outputs to the Digital Output Unit
Temperature Control Units	The Temperature Control Unit controls the temperature of the control target according to the set points and operation commands provided by the CPU Unit. Also, it notifies the CPU Unit of the temperature (measured value) of the control target and data such as output and alarm statuses.

Detailed operation

Details of the operation are described below.

- The CPU Unit transmits the set points and operation commands to the Temperature Control Unit in each refresh cycle of the NX bus.
- The Temperature Control Unit controls the temperature of the control target according to the set points and operation commands. In addition, the Unit monitors inputs from the temperature sensor and CT, and it reflects an error into the output and alarm status when it occurs.
- The temperature data from the controlled target measured by the Temperature Control Unit and the output and alarm statuses are sent to the CPU Unit in each refresh cycle of the NX bus.
- The CPU Unit generates a control stop operation command or a changed set point based on the output and alarm status. Also, when you use the temperature alarm function of the Temperature Control Unit, the data to be output to the digital output unit is generated based on the processing results notified by the output/alarm status. When you do not use the temperature alarm function, the alarm processing is performed based on the set point and measured value, and the data to be output to the digital output unit is generated.*1
- The CPU Unit transmits the operation command or changed set point to the Temperature Control Unit during each NX bus refresh cycle. The alarm output data is sent to the Digital Output Unit during each NX bus refresh cycle.
- The Temperature Control Unit controls the temperature of the controlled system according to the changed set point or operation command.
- The Digital Output Unit outputs alarms according to the output data.

*1. The temperature alarm function is supported by Temperature Control Units with unit version 1.1 or later.

Refer to *1-3-3 Overview of the Data in the Temperature Control Unit and the Access Method* on page 1-14 for an overview of the data held in the Temperature Control Unit and the access method.

Connected to Communications Coupler Unit

This section describes the role and operation of each Unit when an EtherCAT Coupler Unit is used as the Communications Coupler Unit.

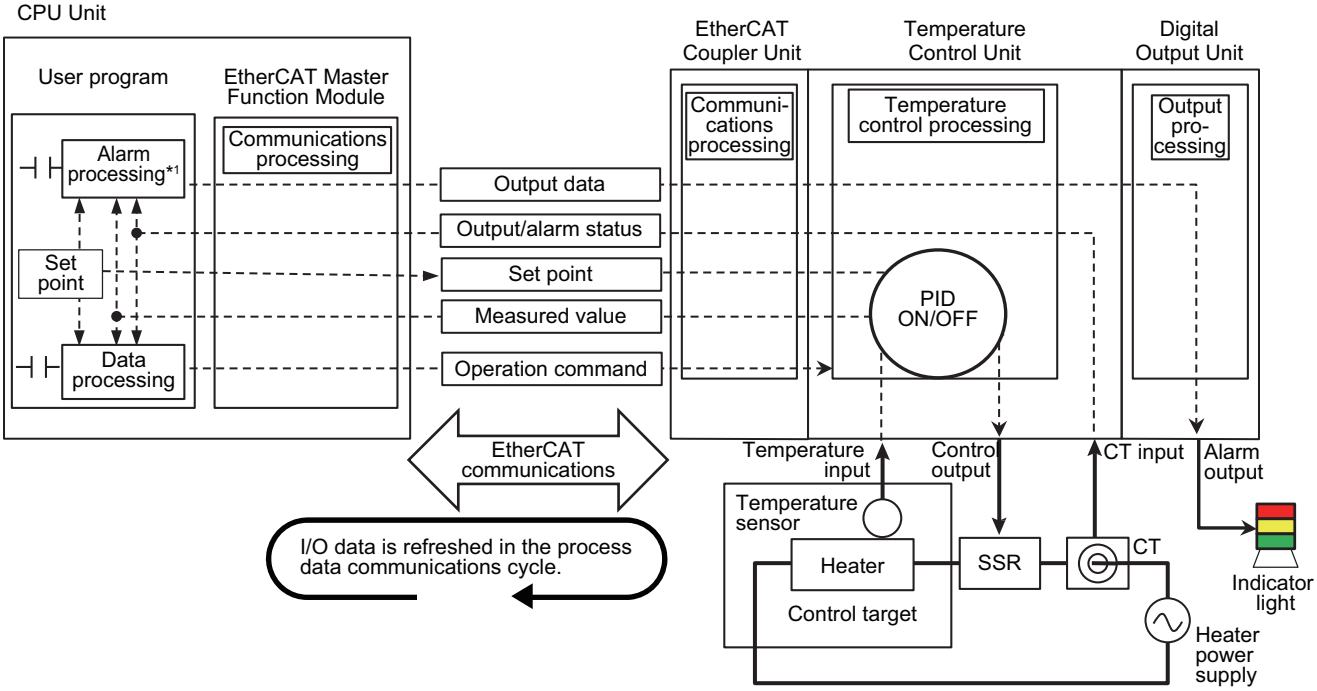

*1. When you use a temperature alarm function supported by a Temperature Control Unit with unit version 1.1 or later, the alarm processing results are notified by the output/alarm status. Therefore, there is no need to perform the alarm processing in the user program based on the set point and temperature data.

● Roles of each Unit

The roles of the Units are as follows:

Unit name	Function
CPU Unit	The CPU Unit processes data such as values measured from the Temperature Control Unit and outputs alarm output data to the Digital Output Unit. It also sends set points and operation commands to the Temperature Control Unit.
EtherCAT Coupler Unit	The EtherCAT Coupler Unit exchanges data with the CPU Unit via EtherCAT communication. It also exchanges data with the Temperature Control Unit.
Temperature Control Units	The Temperature Control Unit controls the temperature of the control target according to the set points and operation commands provided by the CPU Unit. The Temperature Control Unit notifies the CPU Unit of the temperature of the control target and data such as output and alarm statuses.

Detailed operation

Details about the temperature control system are described below.

- The CPU Unit transmits the set points and operation commands to the Temperature Control Unit in each EtherCAT process data communication cycle via PDO communications.
- The Temperature Control Unit controls the temperature of the control target according to the set points and operation commands. In addition, the Unit monitors inputs from the temperature sensor and CT and it generates an output and alarm status when an error occurs.
- The temperature data from the controlled target measured by the Temperature Control Unit and the output and alarm statuses are sent to the CPU Unit in each EtherCAT process data communication cycle.
- The CPU Unit generates a control stop operation command or a changed set point based on the output and alarm status. Also, when you use the temperature alarm function of the Temperature Control Unit, the data to be output to the digital output unit is generated based on the processing results notified by the output/alarm status. When you do not use the temperature alarm function, the alarm processing is performed based on the set point and temperature data, and the data to be output to the digital output unit is generated.*1
- The CPU Unit transmits the operation command or changed set point to the Temperature Control Unit during each process data communications cycle for EtherCAT communications. The alarm output data is sent to the Digital Output Unit during each process data communications cycle for EtherCAT communications.
- The Temperature Control Unit controls the temperature of the controlled system according to the changed set point or operation command.
- The Digital Output Unit outputs alarms according to the output data.

*1. The temperature alarm function is supported by Temperature Control Units with unit version 1.1 or later.

Refer to *1-3-3 Overview of the Data in the Temperature Control Unit and the Access Method* on page 1-14 for an overview of the data held in the Temperature Control Unit and the access method.

1-3-2 Application Examples

System configuration example for temperature control of packing machines

This section shows a sample system configuration using a Temperature Control Unit for controlling the sealing part of a packing machine.

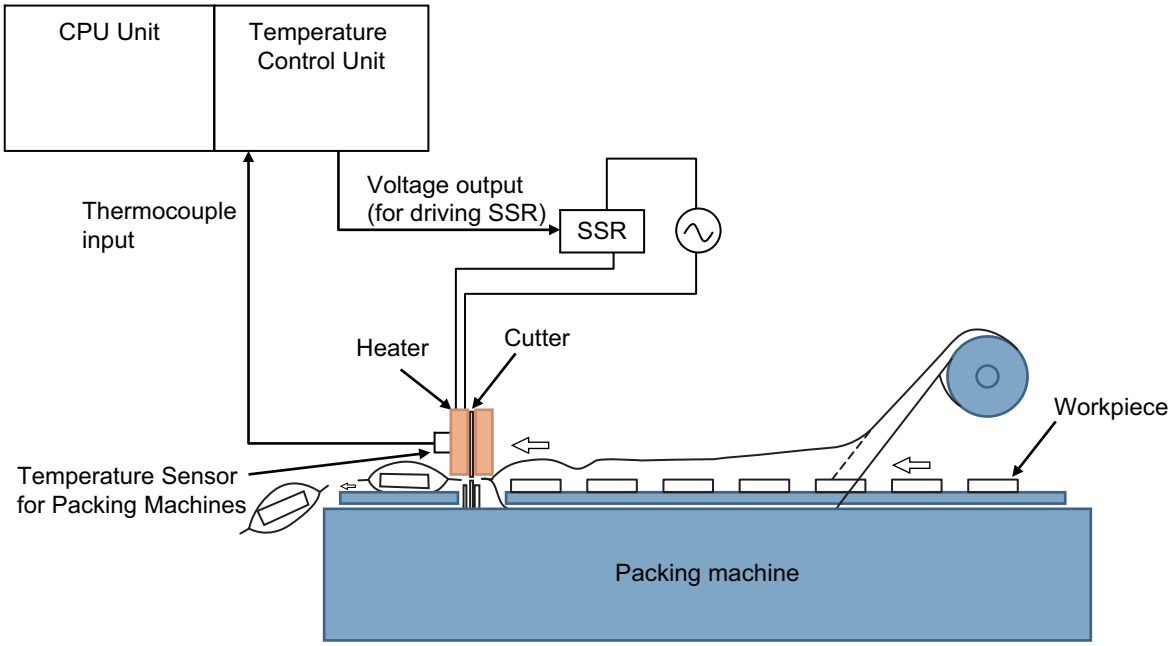

System configuration example for temperature control of water-cooled extruders

This section shows a sample system configuration using a Temperature Control Unit for controlling temperature of a water-cooled extruders.

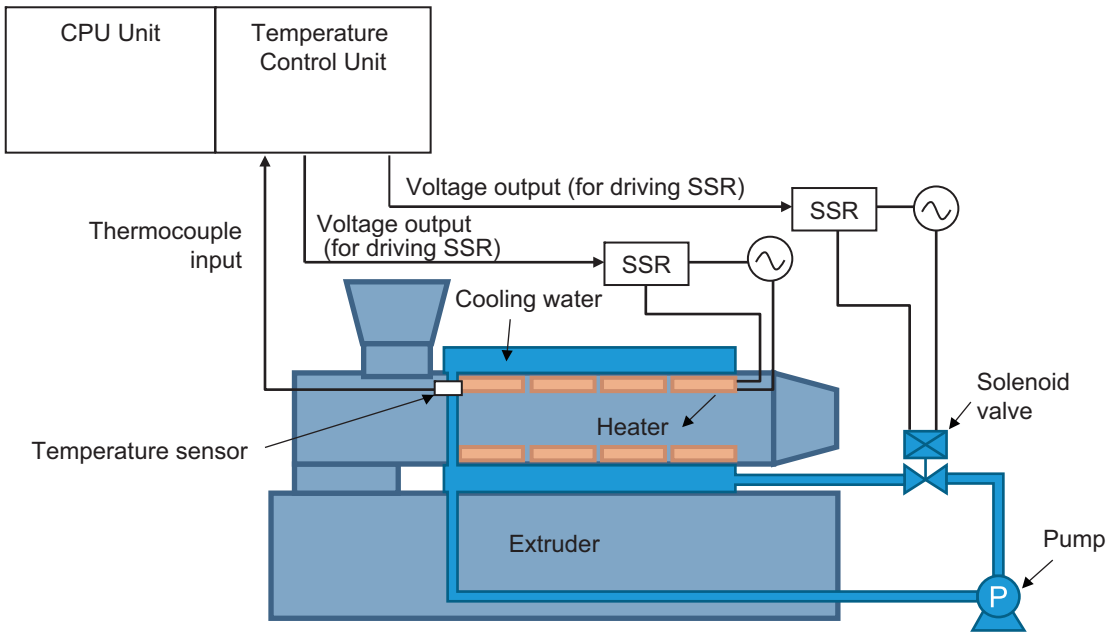

1-3-3 Overview of the Data in the Temperature Control Unit and the Access Method

This section gives an overview of the data in the Temperature Control Unit and the method of accessing the data.

Refer to *Specifications of I/O Data* on page 6-2 for details of the data held in the Temperature Control Unit.

Data			Access method
Name*1	Purpose	Description	
I/O Data	For operation	The data below is used for operations and monitoring during machine operation. • Output data*2 Set points, manual manipulated variables, operation commands, alarm values, alarm values upper limit, and alarm values lower limit • Input data Measured values, manipulated variable monitor, operation statuses, and output/alarm statuses	Make I/O allocation, and read or write the relevant I/O data by executing general purpose instructions from the user program.
	For adjustment *3	The data below is used for operations or monitoring through adjustments based on I/O data. Changes to this data are applied immediately. • Output data PID constants, heater burnout detection current, SSR failure detection current, PV input shift value, input digital filter, hysteresis (heating), and hysteresis (cooling) • Input data PID constants monitor, input digital filter monitor, and heater current	Perform I/O allocation, and access from the user program. • Reading Read the corresponding data with a general purpose instruction, etc. • Writing Set the “Reflect Data for Adjustment” bit of “Ch □ Operation Command” to “True: Reflect”, and write with a general purpose instruction, etc. This data can also be accessed from unit operation settings.

Data			Access method
Name*1	Purpose	Description	
Unit operation settings*4	For initial settings	The data below is used for making the initial settings. Changes to this data are applied after a restart. • Input type, PID ON/OFF, temperature units, etc.	Access using one of the following methods. • Make the Unit operation settings on the editing pane of the Support Software. • Set or read the corresponding NX object by executing messages such as instructions dedicated for NX objects in the user program.
	For adjustment	The data below determines the set values through adjustments based on unit operation settings. Changes to this data are applied immediately. • Data that can be accessed from I/O data as well PID constants, heater burnout detection current, SSR failure detection current, PV input shift value, input digital filter, hysteresis (heating), and hysteresis (cooling) *5 • Data that cannot be accessed from the I/O data PV input slope coefficient, MV at error, MV upper limit, MV lower limit, load rejection MV, dead band, water-cooling proportional band increase threshold, Water-cooling proportional band decrease threshold	

*1. Some data exists only in NX objects, such as Unit configuration information. Refer to *List of NX Objects* on page A-37 for details about NX objects.

*2. The alarm value, alarm value upper limit, and alarm value lower limit can be used with unit version 1.1 or later.

*3. Can be used with unit version 1.1 or later. For details on the operation method of data for adjustment, refer to *6-1-4 Method of Accessing the I/O Data for Adjustment* on page 6-31.

*4. The following data is automatically set when the adaptive control function is used.

Reference proportional band for system fluctuation

Average deviation of system fluctuation

To access the data, you read the corresponding NX object by executing messages such as instructions dedicated for NX objects in the user program.

*5. When the PID constant is determined in advance, it is regarded as initial setting data. The description here presupposes that the PID constant is not determined in advance.

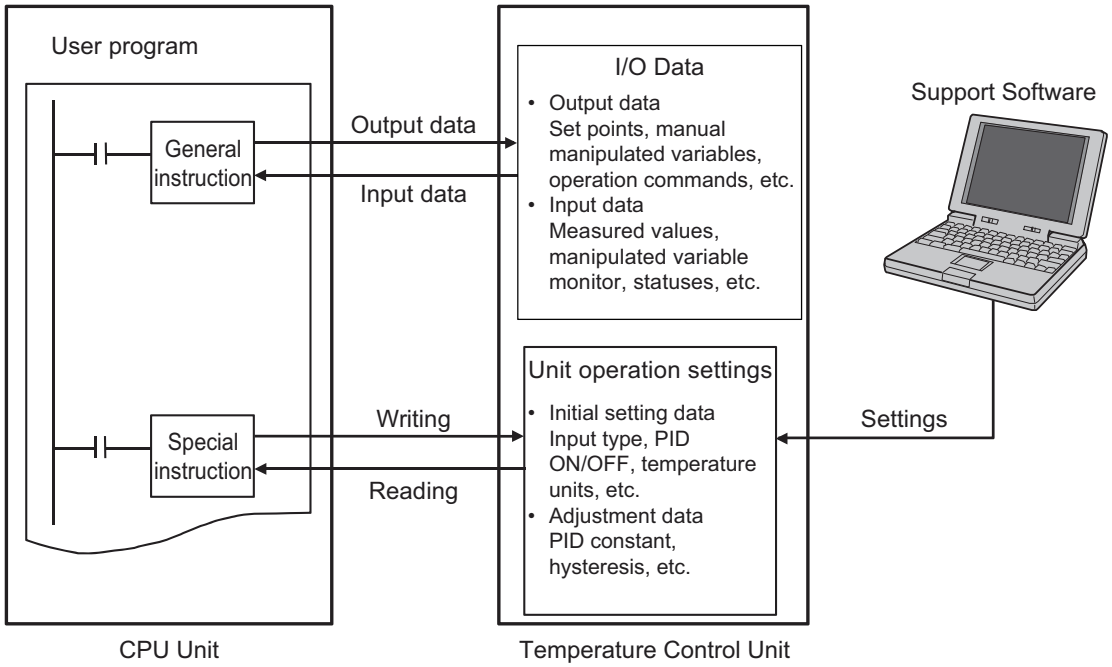
User program
General instruction
Special instruction
Output data
Input data
Writing
Reading
I/O Data
• Output data
Set points, manual manipulated variables, operation commands, etc.
• Input data
Measured values, manipulated variable monitor, statuses, etc.
Unit operation settings
• Initial setting data
Input type, PID ON/OFF, temperature units, etc.
• Adjustment data
PID constant, hysteresis, etc.
Support Software
Settings
CPU Unit
Temperature Control Unit

1-4 Model List

1-4-1 Model Notation

The Temperature Control Unit models are assigned based on the following rules.

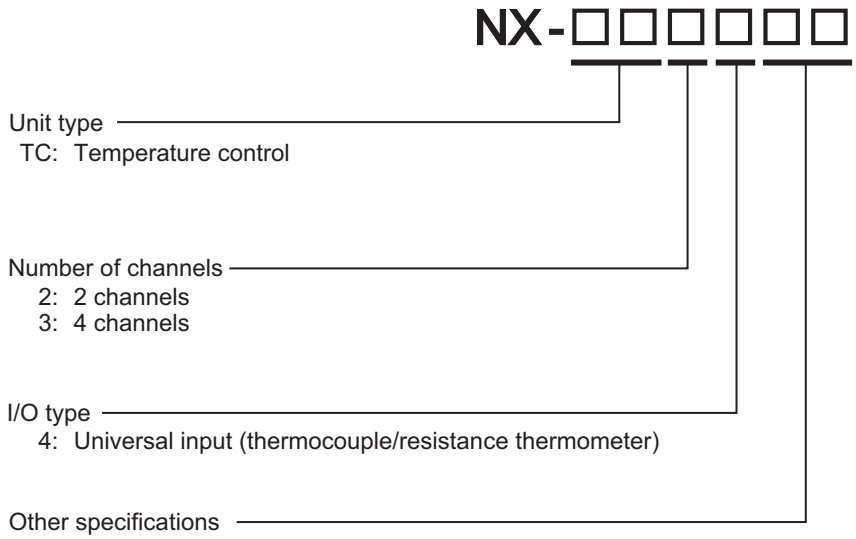

See *Other specifications* on page 1-17 below.

Other specifications

No.	Control type	Output		Number of CT input points per channel	I/O Refreshing Methods
		Output type	Number of output points per channel		
05	Standard control	Voltage output (for driving SSR)	1 point per channel	1 point per channel	Free-Run refreshing
06			1 point per channel	None.	
07	Heating/cooling control		2 points per channel	None.	
08	Standard control	Linear current output	1 point per channel	None.	

Refer to *Section 5 I/O Refreshing* for details about the I/O refreshing method.

1-4-2 Model List

This section lists the Temperature Control Unit models.

Refer to *A-1-2 Detailed Specifications* on page A-4 for details.

Temperature Control Unit (screwless clamping terminal block, 12 mm width)

Model	Number of Channels	Input types	Output		Number of CT input points per channel	Control type	I/O Refreshing Methods	Reference
			Output type	Number of output points per channel				
NX-TC2405	2 channels	Universal input	Voltage output (for driving SSR)	1 point per channel (2 points per Unit)	1 point per channel (2 points per Unit)	Standard control	Free-Run refreshing	P. A-7
NX-TC2406					None.			P. A-10
NX-TC2407			Voltage output (for driving SSR)	2 points per channel (4 points per Unit)	None.	Heating/cooling control		P. A-13
NX-TC2408			Linear current output	1 point per channel (2 points per Unit)	None.	Standard control		P. A-16

Temperature Control Unit (screwless clamping terminal block, 24 mm width)

Model	Number of Channels	Input types	Output		Number of CT input points per channel	Control type	I/O Refreshing Methods	Reference
			Output type	Number of output points per channel				
NX-TC3405	4 channels	Universal input	Voltage output (for driving SSR)	1 point per channel (4 points per Unit)	1 point per channel (4 points per Unit)	Standard control	Free-Run refreshing	P. A-19
NX-TC3406					None.			P. A-22
NX-TC3407			Voltage output (for driving SSR)	2 points per channel (8 points per Unit)	None.	Heating/cooling control		P. A-25
NX-TC3408			Linear current output	1 point per channel (4 points per Unit)	None.	Standard control		P. A-28

1-5 List of Functions

This section shows a list of the Temperature Control Unit functions.

Function name		Description	Reference	Applicable Unit
Free-Run Refreshing		With this I/O refreshing method, the refresh cycle of the NX bus and the I/O refresh cycles of the NX Units are asynchronous.	*5-2-3 Free-Run Refreshing* on page 5-7	All models
Selecting Channel To Use		This function disables control processing, error detection, and output for unused channels. The conversion time for its own Unit will not be shortened even if errors are disabled.	*7-2 Selecting Channel to Use* on page 7-9	All models
Input Functions	Input Type Setting	This function sets the input type of the sensor connected to the temperature input.	*7-3-1 Input Type Settings* on page 7-11	All models
	Temperature Unit Setting (°C/°F)	This function sets the temperature units for measured values to °C (Celsius) or °F (Fahrenheit).	*7-3-2 Temperature Unit (°C/°F) Setting* on page 7-13	All models
	Decimal Point Position Setting	This function sets the number of digits to be displayed after the decimal point for INT type measured values and set point parameters.	*7-3-3 Decimal Point Position Setting* on page 7-15	All models
	Cold Junction Compensation Enable/Disable Setting	This function enables or disables cold junction compensation using the cold junction sensor that is mounted on the terminal block when a thermocouple input is used.	*7-3-4 Cold Junction Compensation Enable/Disable* on page 7-17	All models
	Temperature Input Correction	This function corrects measured values. When there are variations in the sensor or when there is a difference in measured value from other measuring instruments. One-point correction and two-point correction methods are provided.	*7-3-5 Temperature Input Correction* on page 7-19	All models
	Input Digital Filter	This function sets the time constant applied to the first-order lag operation filter so that the noise components mixed with the measured value are eliminated.	*7-3-6 Input Digital Filter* on page 7-22	All models
	Measuring the Ambient Temperature Around Terminals	This function measures the temperature around the terminals of the Temperature Control Unit.	*7-3-7 Measuring the Ambient Temperature around Terminals* on page 7-24	All models
Control Processing	ON/OFF control	This control function uses a preset set point to turn off the control output when the temperature reaches the set point during control.	*7-4-1 ON/OFF control* on page 7-25	All models
	PID control	PID control is a combination of proportional (P) control, integral (I) control, and differential (D) control. It is a control function that feeds back the detected value to the set point so that they conform to each other.	*7-4-2 PID control* on page 7-28	All models
	Heating/Cooling Control	This function controls both heating and cooling.	*7-4-3 Heating and Cooling Control* on page 7-32	Heating/cooling control type models
	Run or Stop Controls	This function starts and stops temperature control.	*7-4-4 Run or Stop Controls* on page 7-37	All models
	Direct/Reverse Operation	This function specifies direct or reverse operation.	*7-4-5 Direct and Reverse Operation* on page 7-38	All models
	Manual MV (Manual Manipulated Variable)	This function outputs the specified manipulated variable during PID control.	*7-4-6 Manual MV* on page 7-40	All models
	MV at Error	This function outputs a fixed manipulated variable when a Sensor Disconnected Error occurs.	*7-4-7 MV at Error* on page 7-42	All models
	MV Limit	This function adds a limit to the manipulated variable calculated by PID control and outputs it.	*7-4-8 MV limit* on page 7-44	All models

Function name		Description	Reference	Applicable Unit
Control Processing	Load Rejection MV	This function performs a preset output operation if the Temperature Control Unit connected to the CPU Unit cannot receive the output setting values from the CPU Unit due to an NX bus error or CPU watchdog timer error. This function performs a preset output operation if the Slave Terminal cannot receive the output setting values due to a communications error between the Temperature Control Unit and the Communications Coupler Unit host or due to an error on the NX bus.	*7-4-9 Load Rejection MV* on page 7-46	All models
	MV Branch	The manipulated variables calculated by the slope or offset are output to the branch-destination channel based on the manipulated variables of the branch-source channel.	*7-4-11 Load-short circuit protection* on page 7-56	Standard control type models
	Load Short-circuit Protection	This function protects output circuits of the Temperature Control Unit when an external device connected to the control output is short-circuited.	*7-4-11 Load-short circuit protection* on page 7-56	Models with voltage output (for driving SSR)
Tuning	AT (Autotuning)	This is a tuning method that derives the PID constant. This function automatically calculates the PID constant by the limit cycle method according to the characteristics of the control target.	*7-5-1 Autotuning (AT)* on page 7-57	All models
	Automatic Filter Adjustment	This is a tuning method that automatically adjusts the input digital filter. This function is primarily for packing machines. It suppresses periodic temperature variations.	*7-5-2 Automatic Filter Adjustment* on page 7-60	Standard control type models
	Water-cooling Output Adjustment	This is a tuning method that automatically adjusts hunting. This function is primarily for water-cooled extruders. It suppresses temperature variations caused by the cooling water output.	*7-5-3 Water Cooling Output Adjustment Function* on page 7-66	Heating/cooling control type models
	Adaptive Control	This is a tuning method that can maintain high control performance by following system changes. This function maintains control performance even if temperature variation factors such as environmental change and equipment deterioration occur during a long-term equipment operation.	*7-5-4 Adaptive control* on page 7-71	Standard control type models
	Notifying the Update of Tuning Parameters	This function notifies that the Temperature Control Unit has automatically updated the parameters by tuning.	*7-5-5 Notifying the Update of Tuning Parameters* on page 7-85	All models
Control Output	Control Period	This function sets the period when the ON/OFF time ratio is changed for voltage output (for driving SSR) in time-proportional operation.	*7-6-1 Control Period* on page 7-87	Models with voltage output (for driving SSR)
	Minimum Output ON/OFF Band	This function specifies the minimum ON/OFF bands for the heating side control output or the cooling side control output. This function can be used to prevent deterioration of mechanical relays when mechanical relays are used in the actuators connected to the output terminals.	*7-6-2 Minimum Output ON/OFF Band* on page 7-89	Models with voltage output (for driving SSR)
	Output Signal Range Setting	This function sets the output signal range of the linear current output. You can specify 4 to 20 mA or 0 to 20 mA.	*7-6-3 Output Signal Range Setting* on page 7-90	Models with linear current output
	Limiting Simultaneous Outputs	This function limits the number of outputs that turn ON simultaneously by shifting the control period of each output and restricting the upper limit of the manipulated variable. You can set a delay between outputs, which allows delays in output device operation that can occur when outputs are switched.	*7-6-4 Limiting Simultaneous Outputs* on page 7-91	Standard control type models with voltage output (for driving SSR)

Function name		Description	Reference	Applicable Unit
Error Detection	Sensor Disconnection Detection	This function detects disconnections in temperature sensors. It also detects that the measured value of the temperature sensor is outside the input indication range.	*7-7-1 Sensor Disconnection Detection* on page 7-97	All models
	Heater Burnout Detection	This function detects heater burnouts. A heater burnout is detected if the control output is ON and the heater current is equal to or less than the heater burnout detection current.	*7-7-2 Heater Burnout Detection* on page 7-98	Models with CT input
	SSR Failure Detection	This function detects SSR failures. An SSR failure is detected if the control output is OFF and the leakage current is equal to or greater than the SSR failure detection current. An SSR failure is a failure that is caused by an SSR short-circuit.	*7-7-3 SSR Failure Detection* on page 7-101	Models with CT input
	Temperature alarms	Function for detecting a deviation or an error in the measured value as an alarm. Alarm operation according to your application can be performed by selecting “Alarm type”.	*7-7-4 Temperature Alarm* on page 7-105	All models
	LBA (Loop Burnout Alarm)	Function to detect an alarm, assuming that there is an error somewhere in the control loop, if the measured value does not change in a state where there is a control deviation equal to or greater than the threshold value between the set point and the measured value.	*7-7-5 LBA (Loop Burnout Alarm)* on page 7-111	All models

1-6 Support Software

The Support Software that is used depends on the system configuration.

● Support Software for a System Configured with a CPU Unit

If your system is configured by connecting an NX Unit to a CPU Unit, the Sysmac Studio is used as the Support Software.

● Support Software for a System Configured with a Slave Terminal

If your system is configured by connecting an NX Unit to a Communications Coupler Unit, refer to the user's manual for the Communications Coupler Unit for information on the Support Software.

Refer to *A-6 Version Information with CPU Units* on page A-122 or *A-7 Version Information with Communications Coupler Units* on page A-125 for information on the Support Software versions.

2

Specifications and Operation Procedures

This section describes the general specifications and individual specifications of Temperature Control Units.

2-1 General Specifications **2-2**
2-2 Individual Specifications **2-3**
2-3 Operation Procedures **2-4**
2-3-1 Overall Procedure 2-4
2-3-2 Unit Initial Setting Procedure 2-6
2-3-3 Backing up the Tuning Parameters 2-7

2-1 General Specifications

The general specifications of Temperature Control Units are provided below.

Item		Specification
Enclosure		Mounted in a panel
Grounding methods		Ground of 100 Ω or less
Operating environment	**Ambient operating temperature**	0 to 55°C
	Ambient operating humidity	10 to 95% RH (with no icing or condensation)
	Atmosphere	Must be free from corrosive gases.
	Ambient storage temperature	-25 to 70°C (with no icing or condensation)
	Altitude	2,000 m max.
	Pollution degree	Pollution degree 2 or less: Conforms to JIS B 3502 and IEC 61131-2.
	Noise immunity	Conforms to IEC 61000-4-4, 2 kV (power supply line)
	Overvoltage category	Category II: Conforms to JIS B 3502 and IEC 61131-2.
	EMC immunity level	Zone B
	Vibration resistance	Conforms to IEC 60068-2-6. 5 to 8.4 Hz with amplitude of 3.5 mm, 8.4 to 150 Hz, acceleration of 9.8 m/s^2 100 min each in X, Y, and Z directions (10 sweeps of 10 min each = 100 min total)
	Shock resistance	Conforms to IEC 60068-2-27, 147 m/s^2, 3 times each in X, Y, and Z directions
	Insulation resistance	20 MΩ min. between isolated circuits (at 100 VDC)
	Dielectric strength	510 VAC between isolated circuits for 1 minute at a leakage current of 5 mA max.
Applicable standards[*1]		cULus: Listed(UL 61010-2-201), ANSI/ISA 12.12.01, EU: EN 61131-2, RCM, KC: KC Registration, EAC

*1. Refer to the OMRON website (www.ia.omron.com) or ask your OMRON representative for the most recent applicable standards for each model.

2-2 Individual Specifications

Refer to *A-1 Datasheet* on page A-3 for the individual specifications of Temperature Control Units.

2-3 Operation Procedures

This section describes the basic operating procedures to use a Temperature Control Unit with CT inputs, an NJ/NX/NY-series Controller, and the Sysmac Studio as an example.

Detailed explanations of the following items will be given after an explanation of the overall procedure.

- Unit Initial Settings
- Backing up the tuning parameters

2-3-1 Overall Procedure

The basic procedure is shown below.

Refer to the user's manual for the connected CPU Unit or Communications Coupler Unit for the application procedures and the method to download the settings for the connected CPU Unit or Slave Terminal.

For Support Software other than the Sysmac Studio, refer to the operation manual for the Support Software that you are using.

Step	Item	Description	Reference
1	Unit Registration and I/O Allocation Settings	Create a project in the Sysmac Studio. Register the Temperature Control Unit offline. Set the I/O allocations.	• Sysmac Studio Version 1 Operation Manual (W504) • *6-1-1 Allocatable I/O Data* on page 6-2
2	Unit Initial Settings	Make the initial settings for the Temperature Control Unit according to the Unit functions that you will use. You can make initial setting under the Unit operation settings.	• *2-3-2 Unit Initial Setting Procedure* on page 2-6 • *Section 7 Functions*
3	Creating the User Program	Create the user program with Sysmac Studio.*1	User's manual for connected CPU Unit or Industrial PC
4	Installing Units	Attach the Temperature Control Unit to the CPU Unit or Communications Coupler Unit.	*4-1 Installing NX Units* on page 4-2
5	Wiring the Unit	Wire the Temperature Control Unit.	• *4-2 Power Supply Types and Wiring* on page 4-8 • *4-3 Wiring the Terminals* on page 4-10 • *4-4 Terminal Arrangement and Wiring Examples* on page 4-28
6	Downloading Unit Settings and User Program	Turn ON the power supply of the CPU Rack or Slave Terminal and download the Unit settings that you created in Sysmac Studio to the Temperature Control Unit. Also download the user program to the CPU Unit or Industrial PC.	*Section 7 Functions* User's manual for connected CPU Unit or Industrial PC

Step	Item	Description	Reference
7	Checking Unit Operation	Perform the following to check the operation of the Temperature Control Unit. • Use the Sysmac Studio to check the wiring by reading the input data and writing output data for the Temperature Control Unit. • Check that the Unit settings and user program are running correctly. • Check the measured values and the output and alarm statuses in the I/O data.*1 If necessary, set the set point and issue "Run or Stop" operation commands to instruct run/stop controls.	• *4-3-2 Checking the Wiring* on page 4-26 • *Section 7 Functions* • *6-1 Specifications of I/O Data* on page 6-2
8	Adjusting Unit Operation	Perform the following to adjust the operation of the Temperature Control Unit. • Adjust the tuning parameters using the automatic tuning function for the Temperature Control Unit control. • Check the heater current and leakage current for normal and abnormal operation in the I/O data. Adjust the set values for the heater burnout detection current and SSR failure detection current as necessary.	• *7-5 Tuning* on page 7-57 • *7-7-2 Heater Burnout Detection* on page 7-98 • *7-7-3 SSR Failure Detection* on page 7-101
9	Backing Up Tuning Parameters	If the tuning parameters were updated in the above step *8. Adjusting Unit Operation*, back up the tuning parameters to the CPU Unit or Communications Coupler Unit. The tuning parameters are stored in the Temperature Control Unit. Therefore, this procedure must be implemented to transfer the tuning parameters to the new Unit after replacement.	*2-3-3 Backing up the Tuning Parameters* on page 2-7

*1. The output and alarm statuses are output to the internal bits for heater burnout detection and SSR failure detection alarms in the CPU Unit. A Temperature Control Unit with unit version 1.0 does not have an alarm function for the temperature, such as an upper and lower-limit alarm. To output alarms, you have to create a user program, from which the dedicated instructions of NJ/NX/NY-series Controllers, such as the Upper/Lower Limit Alarm Group instruction, is executed. For details about the dedicated instructions to output alarms, refer to the instructions reference manual for the connected CPU Unit or Industrial PC.

2-3-2 Unit Initial Setting Procedure

The Unit initial setting procedure for basic temperature control by the Temperature Control Unit is described below. Basic temperature control means receiving a measured value and controlling the manipulated variable to reach the set point.

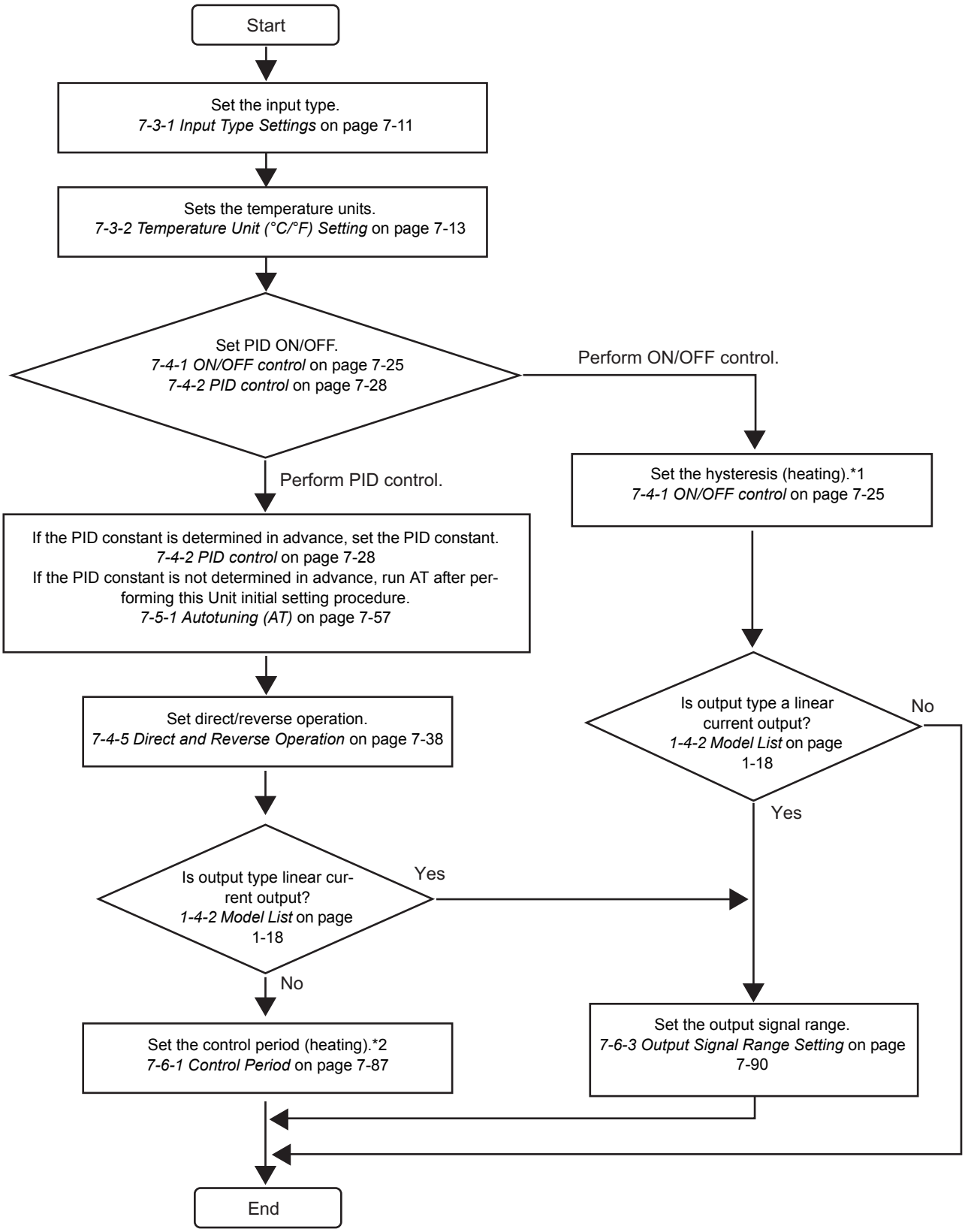

*1. For a heating/cooling control type model, also set the hysteresis (cooling).

*2. For a heating/cooling control type model, also set the control period (cooling).

To use a function not described in this procedure, make the initial settings according to the function to be used. Refer to *Functions* on page 7-1 for details about the functions.

2-3-3 Backing up the Tuning Parameters

This section describes the tuning parameter backup procedure.

Refer to *Notifying the Update of Tuning Parameters* on page 7-85 for the method to perform each procedure.

Step	Item	Description
1	Checking if Tuning Parameters were Updated	When the parameters are updated as a result of automatic tuning by the Temperature Control Unit, it is notified by setting the "Tuning Parameter Updated" bit of "Ch□ Operating Status" in the I/O data to "1: Tuning parameter is updated".*1
2	Backing Up Data	If the tuning parameters were updated, use the following method to save the tuning parameters. Availability of the methods and how to execute them depend on the system configuration. • Backup by the backup function of the NJ/NX/NY-series Controller*2 • Saving NX Unit parameters using dedicated instructions and messages*3 • Uploading Slave Terminal settings*4
3	Canceling the Notifications	The notification is canceled when the tuning parameters are saved. When the notification is canceled, the "Tuning parameter is updated" bit of "Ch□ Operating Status" becomes "Tuning parameter is not updated". The tuning parameters are saved by saving the NX Unit parameters.*5

*1. Refer to *Operating Status* on page 6-16 in *Details about Aggregated Data* on page 6-16 for details about the statuses.

*2. For details on backup using the controller backup function, refer to the user's manual for the connected CPU Unit or Industrial PC.

*3. Refer to the user's manual for the connected CPU Unit or Communications Coupler Unit for information on how to save the NX Unit parameters.

*4. Refer to the user's manual for the connected Communications Coupler Unit for the method to upload the Slave Terminal settings.

*5. The method to save the NX Unit parameters depends on the system configuration. For example, when connecting to an NX-series CPU Unit or when connecting to an EtherCAT Coupler Unit connected to an NJ/NX/NY-series Controller, save the parameters using the system control instruction "Save NX Unit parameter" (NX_SaveParam). Refer to the user's manual for the connected CPU Unit or Communications Coupler Unit for details about how to save the NX Unit parameters.

3

Part Names and Functions

This section describes the names and functions of the parts of the Temperature Control Units.

3-1 Part Names **3-2**
3-2 Terminal Blocks **3-4**
3-3 Indicators **3-5**
3-3-1 TS Indicator 3-6
3-3-2 Output Indicators 3-6

3-1 Part Names

This section describes the names and functions of the parts of the Temperature Control Units.

● Screwless clamping terminal block, 12 mm width

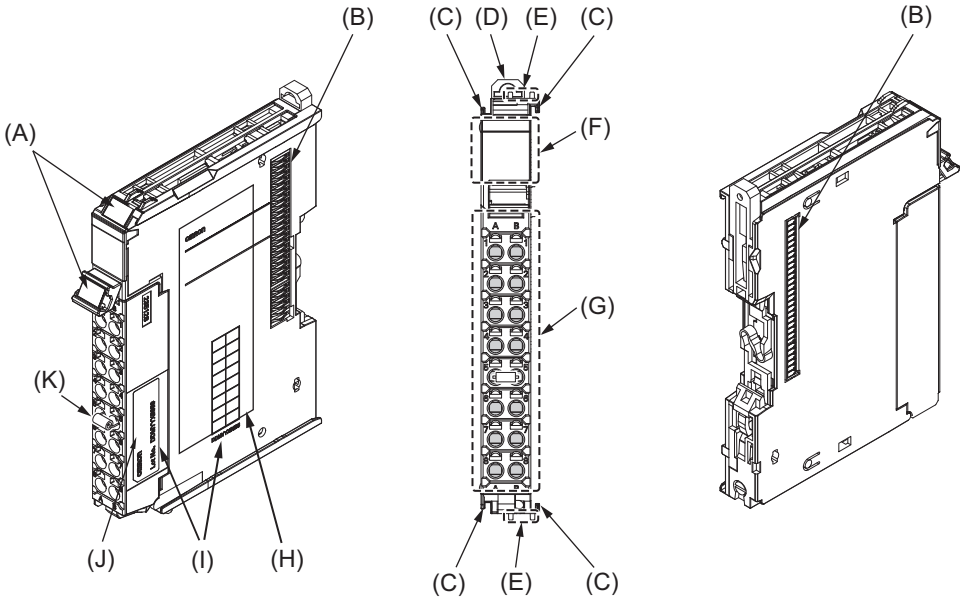

● Screwless clamping terminal block, 24 mm width

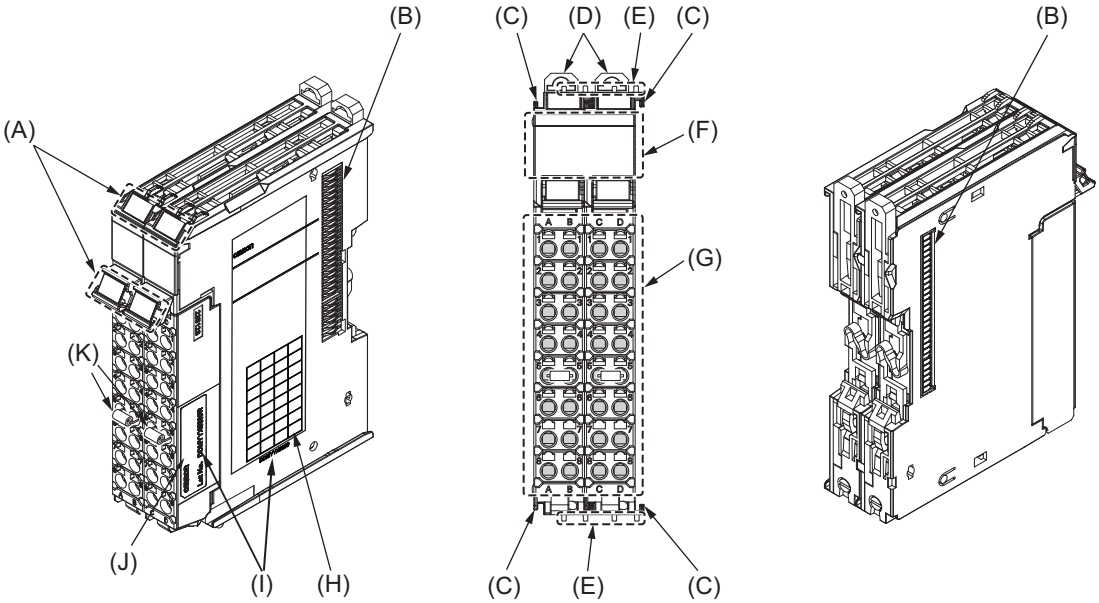

Letter	Name	Function
(A)	Marker attachment locations	The locations where markers are attached. The markers made by OMRON are installed for the factory setting. Commercially available markers can also be installed. Refer to *4-1-2 Attaching Markers* on page 4-4.
(B)	NX bus connector	This connector is used to connect each Unit.
(C)	Unit hookup guides	These guides are used to connect two Units.
(D)	DIN Track mounting hooks	These hooks are used to mount the NX Unit to a DIN Track.
(E)	Protrusions for removing the Unit	The protrusions to hold when removing the Unit.
(F)	Indicators	The indicators show the current operating status of the Unit. Refer to *3-3 Indicators* on page 3-5.
(G)	Terminal block	The terminal block is used to connect external devices. The number of terminals depends on the type of Unit.
(H)	Unit specifications	The specifications of the Unit are given.
(I)	Calibration control number	The calibration control number is used to guarantee overall accuracy. The overall accuracy is guaranteed by using the terminal block and the Unit as a set that have the same calibration control number. Refer to *Precautions When Mounting the Terminal Block* on page 4-21.
(J)	Calibration control number label	The label attached on the terminal block with a calibration control number written on it. With 24 mm wide models, the labels are attached on both left and right terminal blocks. "L" or "R" is appended at the end of the calibration control number to identify left or right.
(K)	Cold junction sensor	This sensor is used to perform the cold junction compensation. Do not touch or remove the cold junction sensor. The sensors are mounted on both left and right terminal blocks for models with 24 mm width.

3-2 Terminal Blocks

The following two types of screwless clamping terminal block are available, according to the width of the Temperature Control Unit.

Precautions for Correct Use

The terminal block cannot be replaced. If the terminal block is replaced, the overall accuracy cannot be guaranteed. Refer to *Precautions When Mounting the Terminal Block* on page 4-21 for details about precautions when mounting the terminal block.

● Screwless clamping terminal block

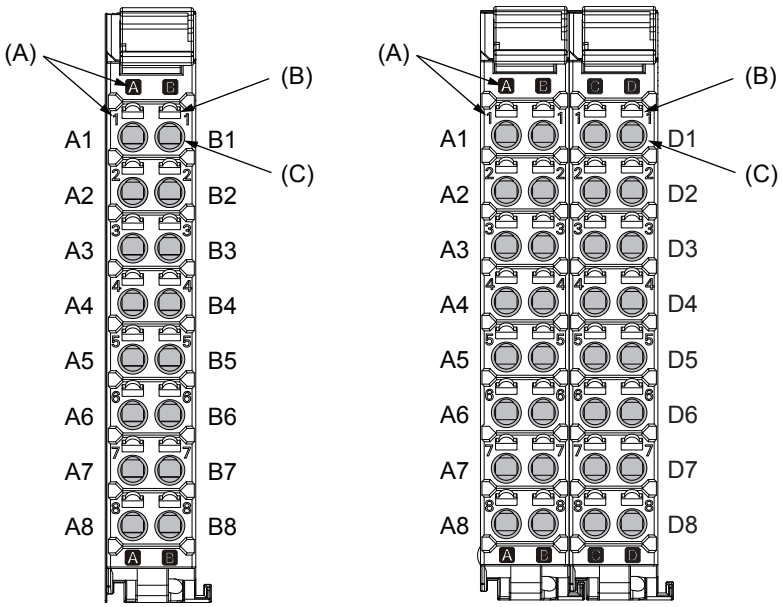

12 mm width
16-terminal type

24 mm width
16-terminal type × 2

Letter	Name	Function
(A)	Terminal number indications	Terminal numbers for which A to D indicate the column, and 1 to 8 indicate the line are displayed. The terminal number is a combination of column and line, i.e. A1 to A8 and B1 to B8. For models of 24 mm width, A1 to A8 and B1 to B8 are terminal number of the left terminal block, C1 to C8 and D1 to D8 are terminal numbers of the right terminal block. The terminal number indications are the same regardless of the number of terminals on the terminal block.
(B)	Release holes	Insert a flat-blade screwdriver into these holes to connect and remove the wires.
(C)	Terminal holes	The wires are inserted into these holes.

3-3 Indicators

There are the indicators to show the current operating status of the Temperature Control Unit.
The indicator pattern depends on the number of outputs on the Unit and Unit width, as shown below.
Refer to *A-1 Datasheet* on page A-3 for details on indicators for each model.

● 12 mm Width

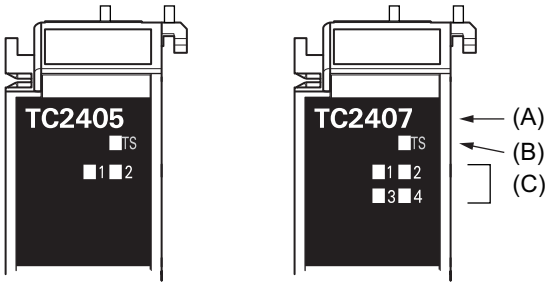

2-point output type　　4-point output type

● 24 mm Width

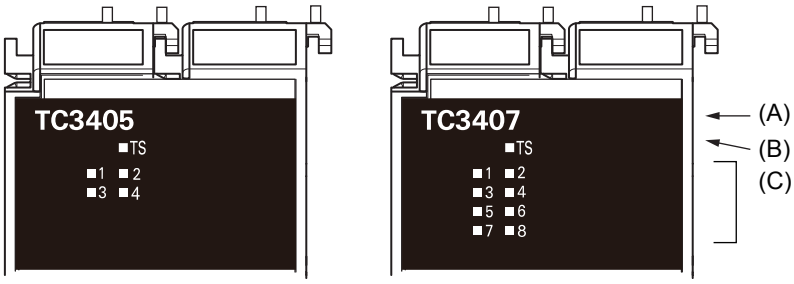

4-point output type　　8-point output type

Letter	Name	Function
(A)	Model number indications	Displays the model number of the Temperature Control Unit. Example) In case of NX-TC2405, "TC 2405" The text is white.
(B)	TS indicator	Shows the status of the Temperature Control Unit.
(C)	Output indicator	Shows the control output status of the Temperature Control Unit. The numbers correspond to the output terminal numbers.

3-3-1 TS Indicator

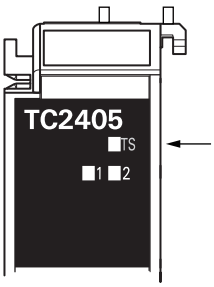

Shows the current status of the Temperature Control Unit and its communications status with the CPU Unit or Communications Coupler Unit.

The meanings of light statuses are described as follows:

Color	Status		Description
Green		Lit	• The Unit is operating normally. • The Unit is ready for I/O refreshing. • I/O checking is operating.*1
		Flashing at 2-s intervals.	• Initializing • Restarting is in progress for the Unit. • Downloading
Red		Lit	A hardware failure, WDT error, or other fatal error that is common to all I/O Units occurred.
		Flashing at 1-s intervals.	A communications error or other NX bus-related error that is common to all I/O Units occurred.
---		Not lit	• No Unit power supply • Restarting is in progress for the Unit. • Waiting for initialization to start

*1. Refer to the manual for the Communications Coupler Unit for the status of the indicator on the Communications Coupler Units when I/O checking is in progress.

3-3-2 Output Indicators

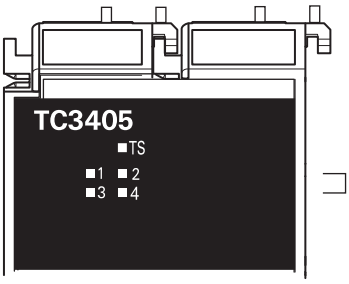

Shows the output status of the control output terminals on the Temperature Control Unit.

Color	Status		Description
Yellow		Lit	Voltage output (for driving SSR): When the control output is ON Linear current output: when manipulated variable is greater than 0%
---		Not lit	Voltage output (for driving SSR): When the control output is OFF Linear current output: when manipulated variable is 0% or below

4

Installation and Wiring

This section describes how to install the NX Units, the types of power supplies provided to the NX Units and wiring methods, and how to wire the NX Units.

4-1 Installing NX Units 4-2

4-1-1 Installing NX Units 4-2

4-1-2 Attaching Markers 4-4

4-1-3 Removing NX Units 4-5

4-1-4 Installation Orientation 4-7

4-2 Power Supply Types and Wiring 4-8

4-2-1 Applications of I/O Power Supply and Supply Methods 4-8

4-2-2 Calculating the Total Current Consumption from I/O Power Supply 4-9

4-3 Wiring the Terminals 4-10

4-3-1 Wiring to the Screwless Clamping Terminal Block 4-10

4-3-2 Checking the Wiring 4-26

4-4 Terminal Arrangement and Wiring Examples 4-28

4-4-1 Terminal Arrangement and Wiring Examples for Each Model 4-28

4-4-2 Switching the Allowable Load Resistance 4-41

4-5 Installing Temperature Sensors for Packing Machines 4-43

4-1 Installing NX Units

This section describes how to install NX Units.

Refer to the user's manual for the CPU Unit or Communications Coupler Unit to which NX Units are connected for information on preparations of installation and installation in a control panel.

4-1-1 Installing NX Units

This section describes how to mount two NX Units to each other.

Always turn OFF the power supply before you mount NX Units.

Always mount NX Units one at a time. If you attempt to mount multiple NX Units that are already connected together, the connections between the NX Units may separate from each other and fall.

Precautions for Safe Use

- Always turn OFF the power supply before installing the Unit. If the power supply is not OFF, the Unit may malfunction or may be damaged.
- Do not apply labels or tape on the NX Units. When the Unit is installed or removed, adhesive or scrap may adhere to the pins of the NX bus connector, which may cause malfunctions.
- Do not touch the pins in the NX bus connector on the Unit. Dirt may adhere to the pins in the NX bus connector, which may result in malfunctions.

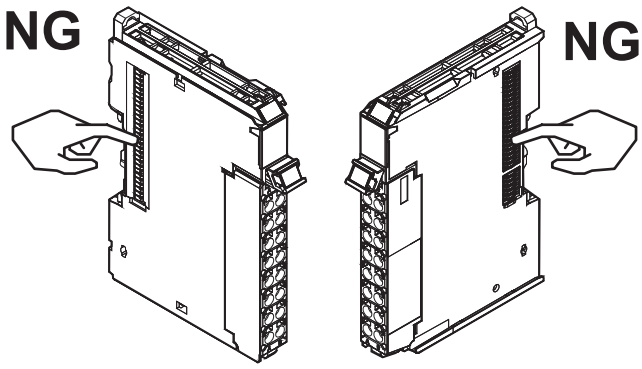

Example: NX Unit (12 mm width)

- Do not write on an NX Unit with ink within the restricted region that is shown in the following figure. Also do not get this area dirty. When the Unit is installed or removed, ink or dirt may adhere to the pins in the NX bus connector, which may result in malfunctions in the CPU Rack or Slave Terminal.
  Refer to the user's manual for the connected CPU Unit or Communications Coupler Unit for the restricted region of CPU Unit and Communications Coupler Unit.

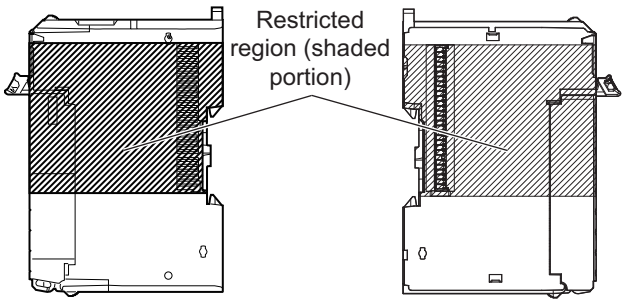

Precautions for Correct Use

- When you install an NX Unit, do not touch or bump the pins in the NX bus connector.
- When you handle an NX Unit, be careful not to apply any stress to the pins in the NX bus connector. If you install an NX Unit and turns ON the power supply when the pins in the NX bus connector are deformed, a contact defect may cause malfunctions.

1 From the front of the previously mounted NX Unit, engage the Unit hookup guides on a new Unit with the Unit hookup guides on the previously mounted NX Unit.

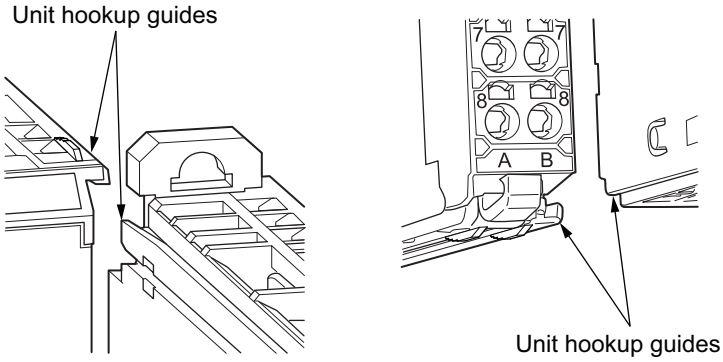

2 Slide the NX Unit in on the hookup guides.

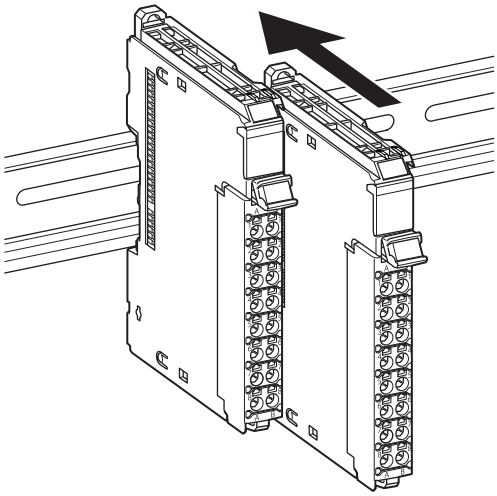

3 Press the NX Unit with a certain amount of force against the DIN Track until you hear the DIN Track mounting hook lock into place.

When you mount the NX Unit, it is not necessary to release the DIN track mounting hook on the NX Unit.

After you mount the NX Unit, make sure that it is locked to the DIN Track.

Additional Information

- Normally, it is not necessary to release the DIN track mounting hook when you mount the NX Unit. However, if you mount the NX Unit on a DIN Track that is not a recommended DIN Track, the DIN track mounting hook may not lock correctly. If that happens, first unlock the DIN track mounting hook, mount the NX Unit to the DIN Track, then lock the DIN track mounting hook.
- Refer to the user's manual for the CPU Unit to which NX Units can be connected for information on how to mount the CPU Unit, and how to mount NX Units to the CPU Unit.
- Refer to the user's manual for the Communications Coupler Unit for information on how to mount the Communications Coupler Unit, and how to mount the NX Unit to the Communications Coupler Unit.

4-1-2 Attaching Markers

Markers can be attached to the NX Units and terminal blocks on NX Units to identify them.

The plastic markers made by OMRON are installed for the factory setting. The ID information can be written on them.

Commercially available markers can also be installed.

Replace the markers made by OMRON if you use commercially available markers now.

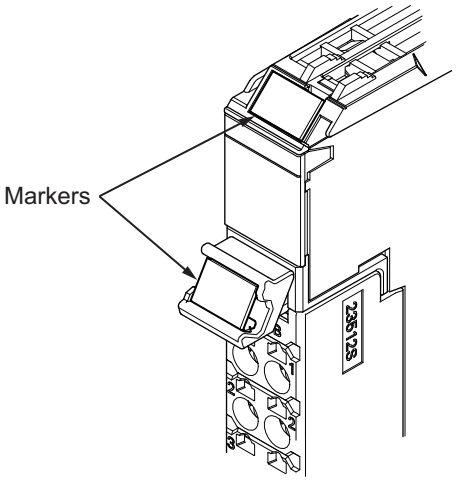

Installation Method

Insert the protrusions on the markers into the marker attachment locations on the NX Units and terminal blocks on NX Units.

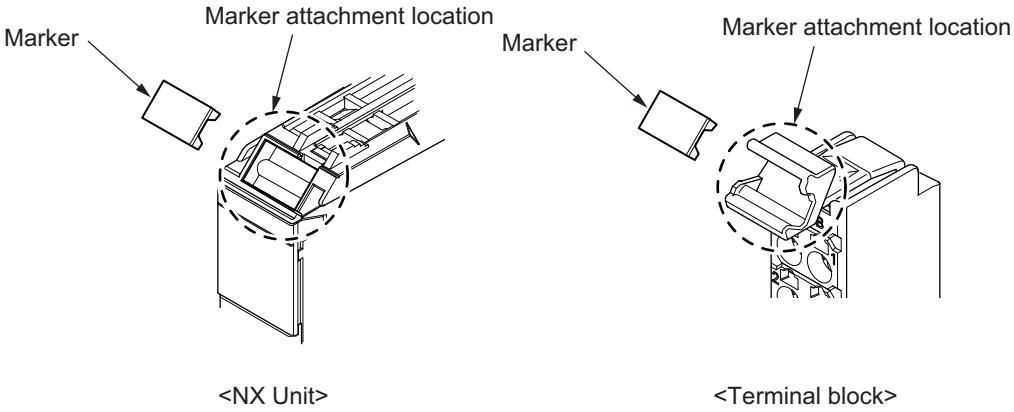

● Commercially Available Markers

Commercially available markers are made of plastic and can be printed on with a special printer.

To use commercially available markers, purchase the following products.

Product name	Model number	
	Manufactured by Phoenix Contact	Manufactured by Weidmuller
Markers	UC1-TMF8	DEK 5/8
Special marker printer	UM EN BLUEMARK X1	PrintJet PRO

The markers made by OMRON cannot be printed on with commercially available special printers.

4-1-3 Removing NX Units

Precautions for Safe Use

Always turn OFF the Unit power supply and I/O power supply before you remove the NX Unit.

1 Use a flat-blade screwdriver to pull up the DIN Track mounting hook on the Unit to remove.

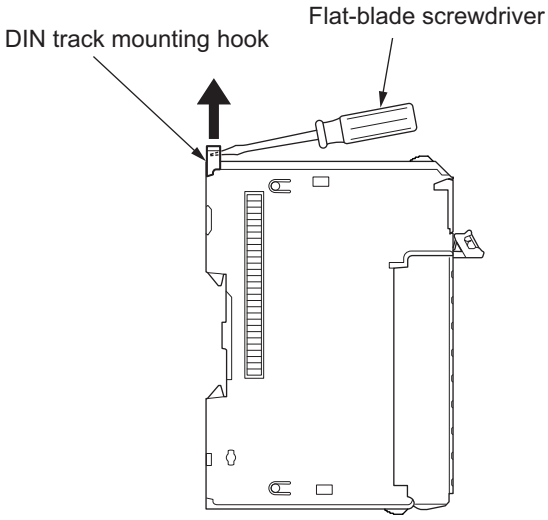

2 Put your fingers on the protrusions for removing multiple NX Units including the Unit to be removed, then pull out straight forward to remove.

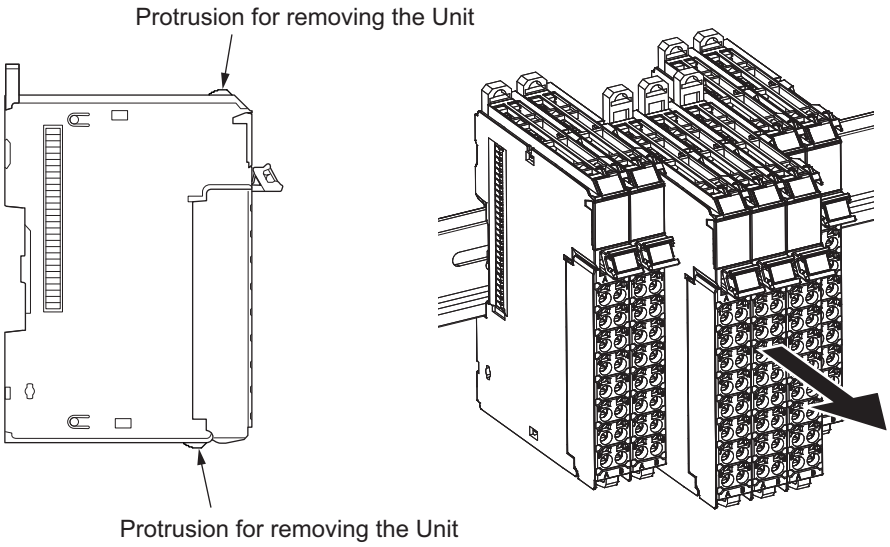

Precautions for Correct Use

- When removing an NX Unit, remove multiple Units together which include the one you want to remove. If you attempt to remove only one Unit, it is stuck and hard to pull out.
- Do not unlock the DIN track mounting hooks on all of the NX Units at the same time. If you unlock the DIN Track mounting hooks on all of the NX Units at the same time, all of the Units may come off.

4-1-4 Installation Orientation

The following explains the installation orientation for each NX Unit connection destination.

Installation Orientation in the Case of a CPU Unit

Orientation is possible only in the upright installation orientation.

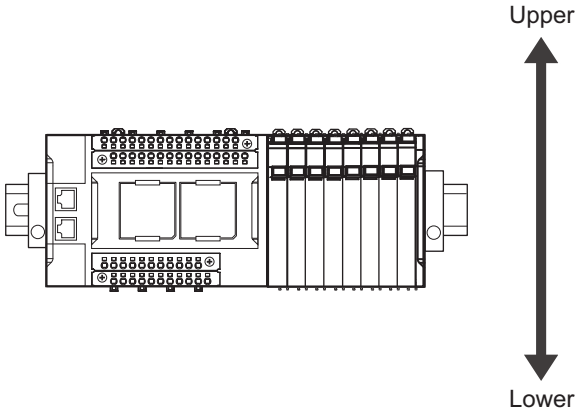

However, there are restrictions on the specifications depending on the NX Units to be used.

Refer to the user's manuals for the NX Units and System Units that you will use for details on restrictions.

Installation Orientation in the Case of a Slave Terminal

Orientation is possible in the following six directions.

(A) is the upright orientation and (B) to (F) are other orientations.

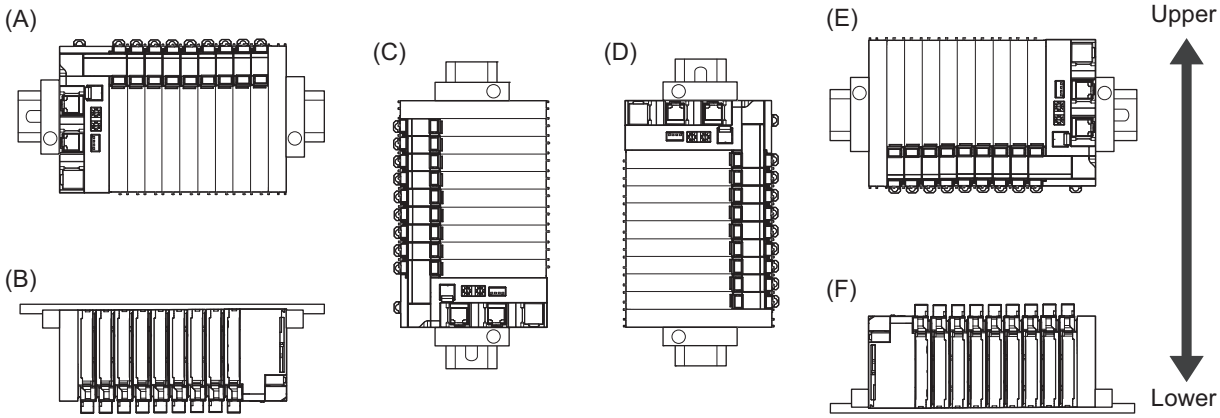

However, there are restrictions on the installation orientation and restrictions to the specifications that can result from the Communications Coupler Units and NX Units that are used.

Refer to the user's manuals for the Communications Coupler Units, NX Units and System Units that you will use for details on restrictions.

Precautions for Safe Use

For installation orientations (C) and (D) in the above figure, support the cables, e.g., with a duct, so that the End Plate on the bottom is not subjected to the weight of the cables. The weight of the cables may cause the bottom End Plate to slide downward so that the Slave Terminal is no longer secured to the DIN Track, which may cause malfunctions.

4-2 Power Supply Types and Wiring

There are the following two types of power supplies that supply power to the NX Units.

Power supply name	Description
NX Unit power supply	This power supply is used for operating the NX Units.
I/O power supply	This power supply is used for driving the I/O circuits of the NX Units and for the connected external devices.

The method for supplying power to the NX Units and the wiring method depend on the specifications for the CPU Unit to which NX Units are connected or the specifications for the Slave Terminal. Refer to *Designing the Power Supply System* or *Wiring*, which are described both in the hardware user's manual for the CPU Unit to which NX Units are connected and user's manual for the Communications Coupler Unit, for details on the method for supplying power to the NX Units and the wiring method.

The subsequent sections describe the applications of I/O power supply for the Temperature Control Units and supply methods, and how to calculate the total current consumption from the I/O power supply.

4-2-1 Applications of I/O Power Supply and Supply Methods

The applications of I/O power supply and supply methods for the Temperature Control Units are given as follows.

Applications of I/O Power Supply

The I/O power supply is used for the following applications.

- Driving the I/O circuits
- Supplying output current for control outputs

I/O Power Supply Method

I/O power is supplied to a Temperature Control Unit from the NX bus.

This power is supplied through the NX bus connectors by connecting an I/O power supply to the I/O power supply terminals on the Communications Coupler Unit or Additional I/O Power Supply Unit.

For the Units to which I/O power supply is provided by a CPU Rack, refer to *Designing the Power Supply System* or *Wiring* in the hardware user's manual for the CPU Unit to which NX Units are connected.

For the Units to which I/O power supply is provided by a Slave Terminal, refer to *Designing the Power Supply System* or *Wiring* in the user's manual for the Communications Coupler Unit to be connected.

Additional Information

Power Supply-related Units for the NX-series

The following three NX-series Units are related to power supply.

- Additional NX Unit Power Supply Unit
- Additional I/O Power Supply Unit
- I/O Power Supply Connection Unit

Refer to the *NX-series System Unit User's Manual (Cat. No. W523)* for the specifications of these Units.

For a complete list of the latest power supply Units in the NX Series, refer to the product catalog or OMRON websites, or contact your OMRON representatives.

4-2-2 Calculating the Total Current Consumption from I/O Power Supply

The total current consumption of I/O power supplied from the NX bus must be within the range of the maximum I/O power supply current of the Communications Coupler Unit or the Additional I/O Power Supply Unit. However, the maximum I/O power supply current, when an Additional I/O Power Supply Unit is connected to the CPU rack of the CPU Unit, may be lower than the value of the Additional I/O Power Supply Unit. For example, in the CPU rack of the NX1P2 CPU Unit, the maximum I/O power supply current is 4 A. Refer to the hardware user's manual for the CPU Unit to which NX Units are connected for information on the restrictions for the CPU Rack.

To confirm this and to calculate the I/O power supply capacity, calculate the total current consumption from I/O power supply from the NX bus.

The total current consumption from I/O power supply from the NX bus is the total sum of current consumption from I/O power supply of the NX Unit that supplies the I/O power from the NX bus, the current of each applicable I/O circuit, and current consumption of any connected external devices.

Note that the current consumption from I/O power supply indicated in the datasheet for each Unit type does not include the load current of any external connection load and current consumption of any connected external devices.

The total current consumption from the I/O power supply of the Temperature Control Unit is calculated as follows.

Total current consumption from the I/O power supply of the Temperature Control Unit

= (Current consumption from I/O power supply of Temperature Control Unit) + (Total output current from control outputs*1)

*1. The output current from the voltage output (for driving SSR) is the input current to the connected SSRs.

Refer to *A-1 Datasheet* on page A-3 for the current consumption from the I/O power supply for each model of Temperature Control Unit.

Precautions for Safe Use

For the CPU Rack of the NX-series CPU Units, the current consumption from I/O power supply should not exceed the values specified for each model of CPU Units. For example for an NX1P2 CPU Unit, the current consumption should be 4A or less. Using the currents that are outside of the specifications may cause failure or damage.

4-3 Wiring the Terminals

This section describes how to wire the terminals on the Temperature Control Units.

⚠ WARNING

Make sure that the voltages and currents that are input to the Units and slaves are within the specified ranges.

Inputting voltages or currents that are outside of the specified ranges may cause accidents or fire.

4-3-1 Wiring to the Screwless Clamping Terminal Block

This section describes how to connect wires to the screwless clamping terminal block, the installation and removing methods, and functions for preventing incorrect attachment.

You can connect ferrules that are attached to the twisted wires to the screwless clamping terminal block. You can also connect the twisted wires or the solid wires to the screwless clamping terminal block. If you connect the ferrules, all you need to do to connect the wires is to insert the ferrules into the terminal holes.

Wiring Terminals

The terminals to be wired are as follows.

- I/O terminals

Applicable Wires

The wires that you can connect to the screwless clamping terminal block are twisted wires, solid wires, and ferrules that are attached to the twisted wires. The following section describes the dimensions and processed methods for applicable wires.

● Dimensions of Wires Connected to the Terminal Block

The dimensions of wires that you can connect into the terminal holes of the screwless clamping terminal block are as in the figure below.

Process the applicable wires that are specified in the following description to apply the dimensions.

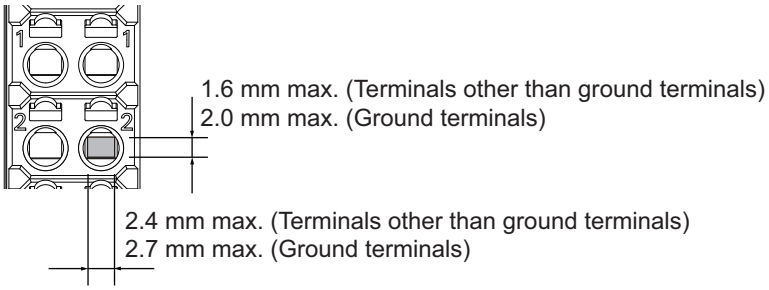

Using Ferrules

If you use ferrules, attach the twisted wires to them.

Observe the application instructions for your ferrules for the wire stripping length when attaching ferrules.

Always use plated one-pin ferrules. Do not use unplated ferrules or two-pin ferrules.

The applicable ferrules, wires, and crimping tools are listed in the following table.

Terminal types	Manufacturer	Ferrule model	Applicable wire (mm^2 (AWG))	Crimping tool
Terminals other than ground terminals	Phoenix Contact	AI0,34-8	0.34 (#22)	Phoenix Contact (The figure in parentheses is the applicable wire size.) CRIMPFOX 6 (0.25 to 6 mm^2, AWG24 to 10)
		AI0,5-8	0.5 (#20)	
		AI0,5-10		
		AI0,75-8	0.75 (#18)	
		AI0,75-10		
		AI1,0-8	1.0 (#18)	
		AI1,0-10		
		AI1,5-8	1.5 (#16)	
		AI1,5-10		
Ground terminals		AI2,5-10	2.0 *1	
Terminals other than ground terminals	Weidmuller	H0.14/12	0.14 (#26)	Weidmuller (The figure in parentheses is the applicable wire size.) PZ6 Roto (0.14 to 6 mm^2, AWG26 to 10)
		H0.25/12	0.25 (#24)	
		H0.34/12	0.34 (#22)	
		H0.5/14	0.5 (#20)	
		H0.5/16		
		H0.75/14	0.75 (#18)	
		H0.75/16		
		H1.0/14	1.0 (#18)	
		H1.0/16		
		H1.5/14	1.5 (#16)	
		H1.5/16		

*1. Some AWG14 wires exceed 2.0 mm^2 and cannot be used in the screwless clamping terminal block.

When you use any ferrules other than those in the above table, crimp them to the twisted wires so that the following processed dimensions are achieved.

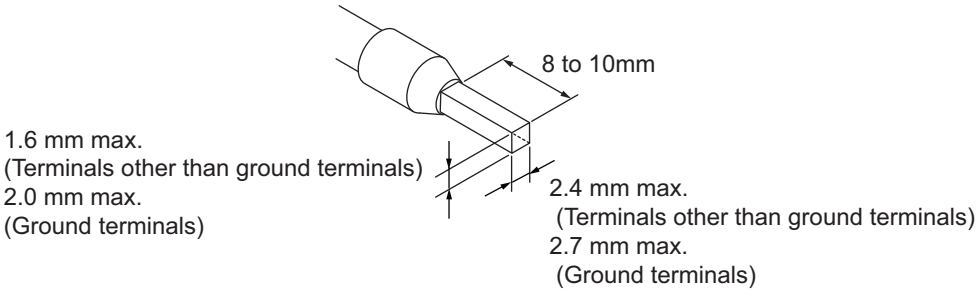

Using Twisted Wires/Solid Wires

If you use twisted wires or solid wires, use the following table to determine the correct wire specifications.

Terminals		Wire type				Wire size	Conductor length (stripping length)
Classification	Current capacity	Twisted wires		Solid wire			
		Plated	Unplated	Plated	Unplated		
All terminals except ground terminals	2 A max.	Possible	Possible	Possible	Possible	0.08 to 1.5 mm^2 (AWG 28 to 16)	8 to 10 mm
	Greater than 2 A and 4 A or less		Not Possible	Possible*1	Not Possible		
	Greater than 4 A	Possible*1		Not Possible			
Ground terminals	---	Possible	Possible	Possible*2	Possible*2	2.0 mm^2	9 to 10 mm

*1. Secure wires to the screwless clamping terminal block. Refer to *Securing Wires* on page 4-16 for how to secure wires.

*2. With the NX-TB□□□1 Terminal Block, use twisted wires to connect the ground terminal. Do not use a solid wire.

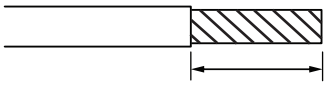

Conductor length (stripping length)

Precautions for Correct Use

- Use cables with suitable wire sizes for the carrying current. There are also restrictions on the current due to the ambient temperature. Refer to the manuals for the cables and use the cables correctly for the operating environment.
- For twisted wires, strip the sheath and twist the conductor portion. Do not unravel or bend the conductor portion of twisted wires or solid wires.

NG

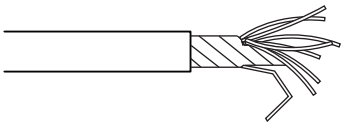

Unravel wires

NG

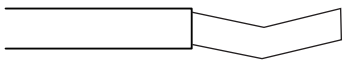

Bend wires

Additional Information

If more than 2 A will flow on the wires, use plated wires or use ferrules.

Connecting/Removing Wires

This section describes how to connect and remove wires.

● Terminal Block Parts and Names

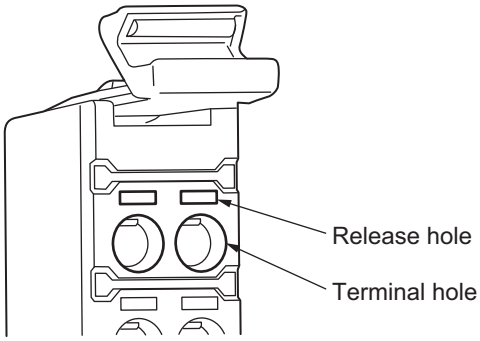

● Required Tools

Use a flat-blade screwdriver to connect and remove wires.

Use the following flat-blade screwdriver.

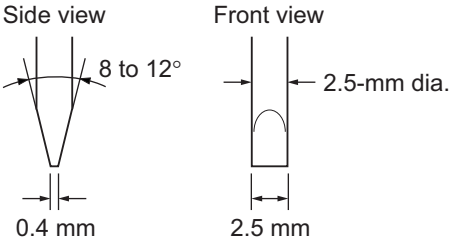

Recommended screwdriver

Model	Manufacturer
SZF 0-0,4×2,5	Phoenix Contact

Connecting Ferrules

Insert the ferrule straight into the terminal hole.

It is not necessary to press a flat-blade screwdriver into the release hole.

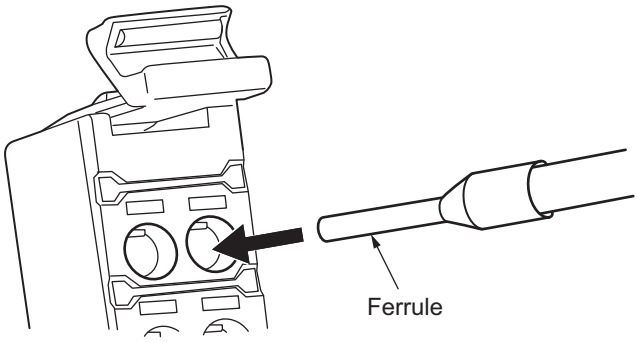

After you make a connection, make sure that the ferrule is securely connected to the terminal block.

Connecting Twisted Wires/Solid Wires

Use the following procedure to connect the twisted wires or solid wires to the terminal block.

1 Press a flat-blade screwdriver diagonally into the release hole.

Press at an angle of 10° to 15°.

If you press in the screwdriver correctly, you will feel the spring in the release hole.

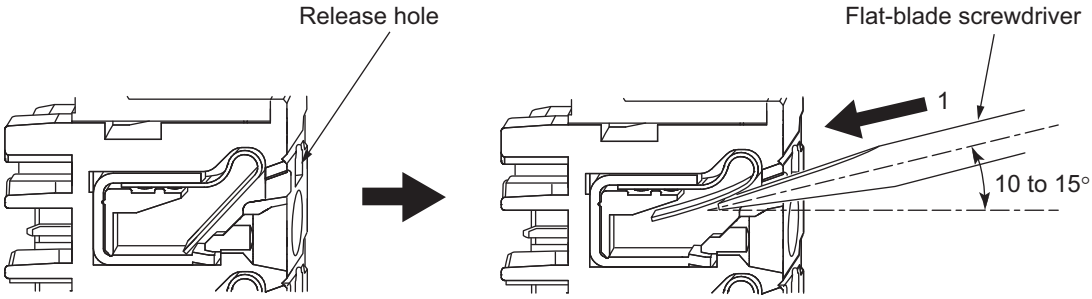

2 Leave the flat-blade screwdriver pressed into the release hole and insert the twisted wire or the solid wire into the terminal hole.

Insert the twisted wire or the solid wire until the stripped portion is no longer visible to prevent shorting.

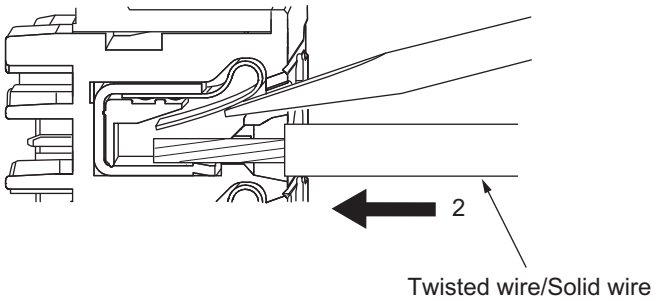

3 Remove the flat-blade screwdriver from the release hole.

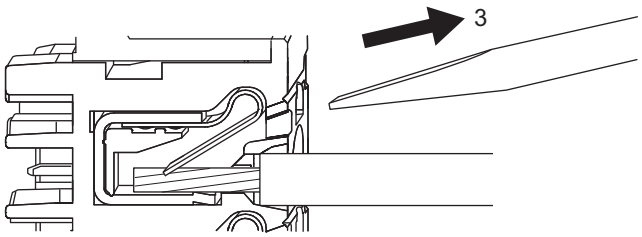

After you make a connection, make sure that the twisted wire or the solid wire is securely connected to the terminal block.

Precautions for Safe Use

- Do not press the flat-blade screwdriver straight into the release hole. Doing so may break the terminal block.

NG OK

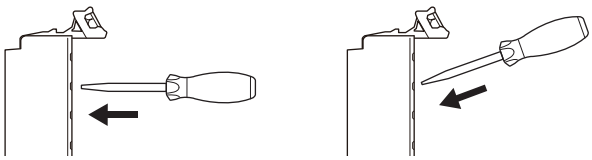

- When you insert a flat-blade screwdriver into a release hole, press it down with a force of 30 N max. Applying excessive force may damage the terminal block.
- Do not tilt or twist the flat-blade screwdriver while it is pressed into the release hole. Doing so may break the terminal block.

NG NG

- Make sure that all wiring is correct.
- Do not bend the cable forcibly. Doing so may sever the cable.

Securing Wires

It is necessary to secure wires to the screwless clamping terminal block depending on the wire types that are used or the current flows on the wires.

The following table gives the necessity for securing wires.

Terminals		Wire type				
		Ferrule	Twisted wires		Solid wire	
Classification	Current capacity		Plated	Unplated	Plated	Unplated
All terminals except ground terminals	2 A max.	No	No	No	No	No
	Greater than 2 A and 4 A or less			Not Possible	Yes	Not Possible
	Greater than 4 A		Yes		Not Possible	
Ground terminals	---		No	No	No	No

Use the following procedure to secure the wires.

1 Prepare a cable tie.

A cable tie can be used with a width of 4 mm or less and a thickness of 1.5 mm or less.

Select a cable tie correctly for the operating environment.

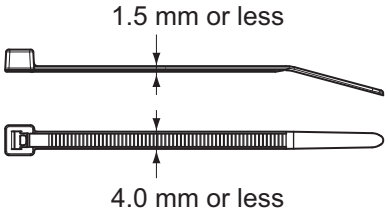

2 Pass a cable tie through the hole for securing wires on the bottom of the screwless clamping terminal block.

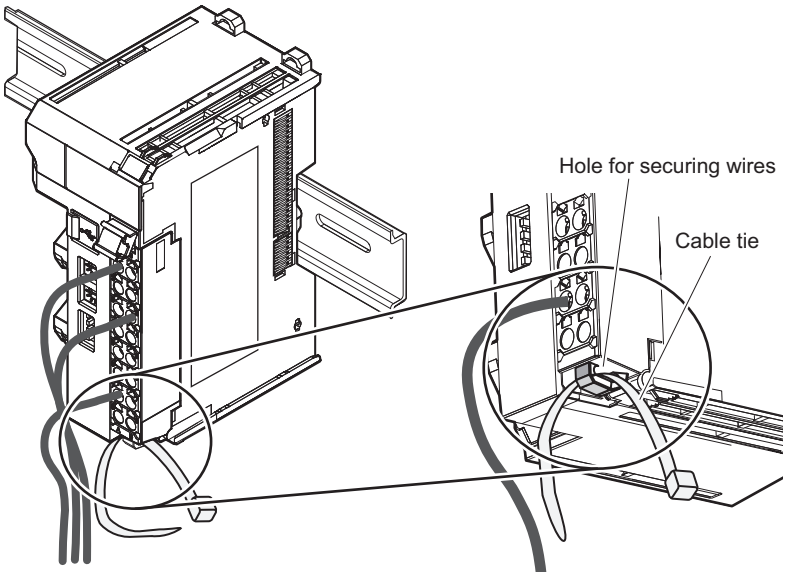

3 Bundle the wires with a cable tie and secure them to the screwless clamping terminal block.

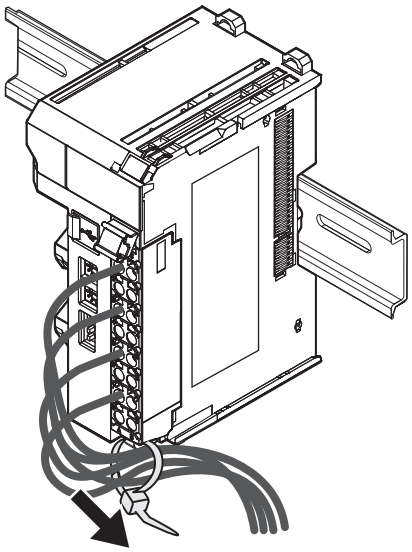

Secure wires within the range of 30 mm from the screwless clamping terminal block.

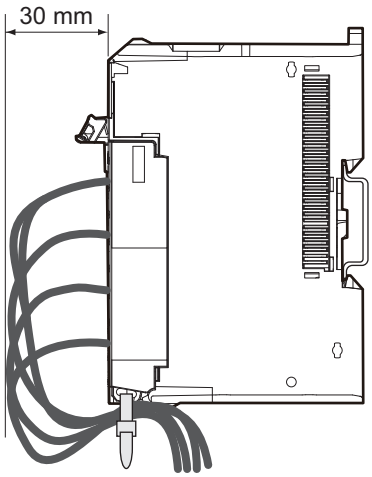

Removing Wires

Use the following procedure to remove the wires from the terminal block.

The removal method is the same for ferrules, twisted wires, and solid wires.

If wires are secured firmly to the terminal block, release them first.

1 Press the flat-blade screwdriver diagonally into the release hole.

Press at an angle of 10° to 15°.

If you press in the screwdriver correctly, you will feel the spring in the release hole.

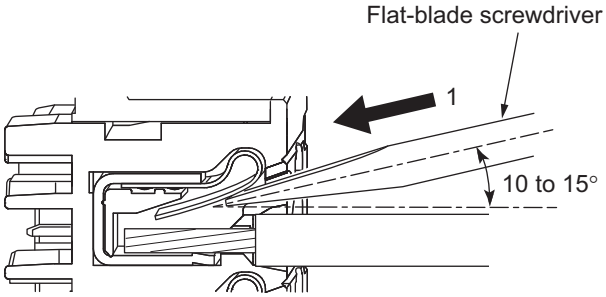

2 Leave the flat-blade screwdriver pressed into the release hole and pull out the wire.

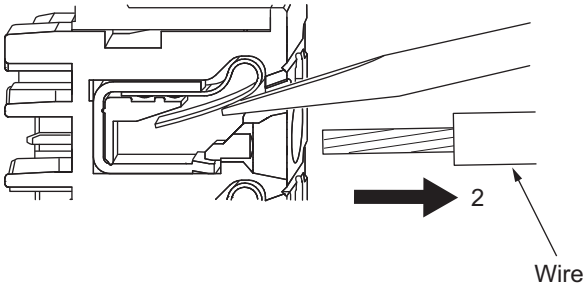

3 Remove the flat-blade screwdriver from the release hole.

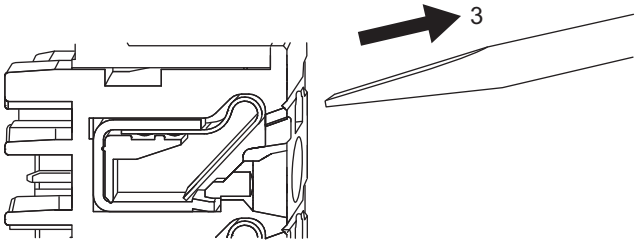

Precautions for Safe Use

- Do not press the flat-blade screwdriver straight into the release hole. Doing so may break the terminal block.

NG OK

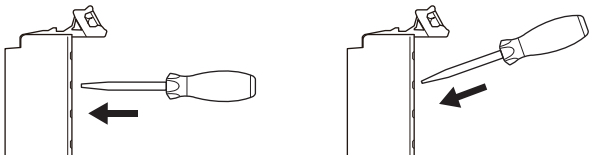

- When you insert a flat-blade screwdriver into a release hole, press it down with a force of 30 N max. Applying excessive force may damage the terminal block.
- Do not tilt or twist the flat-blade screwdriver while it is pressed into the release hole. Doing so may break the terminal block.

NG NG

- Make sure that all wiring is correct.
- Do not bend the cable forcibly. Doing so may sever the cable.

Removing a Terminal Block

1 Press the lock lever on the terminal block and pull out the top of the terminal block to remove it.

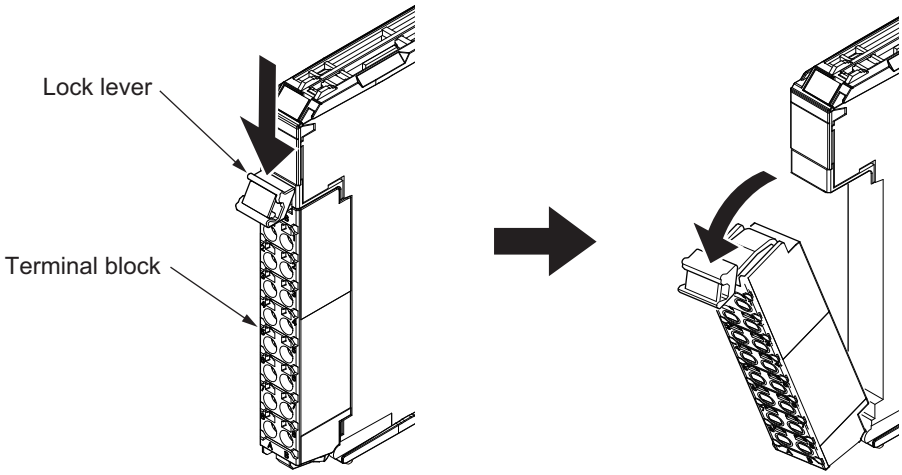

Attaching a Terminal Block

1 Mount the terminal block hook on the guide at the bottom of the NX Unit, lift up the terminal block, and press in on the top of the terminal block until you hear it engage.

The terminal block will click into place on the Unit.

After you mount the terminal block, make sure that it is locked to the Unit.

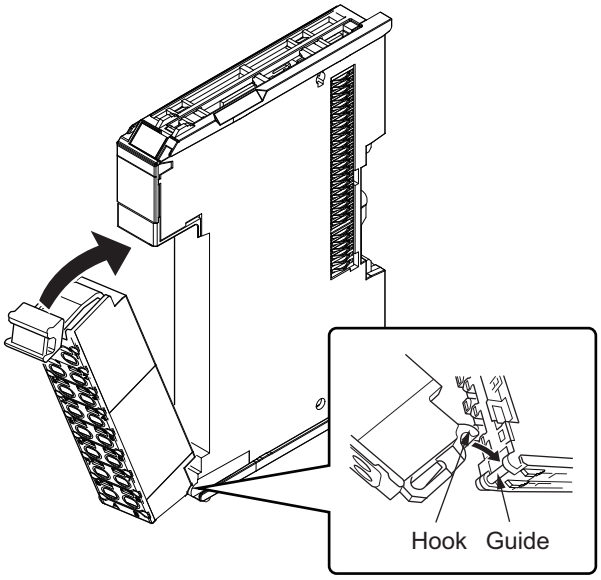

Mount the terminal block that was installed to the Unit as default at the factory setting. The overall accuracy is guaranteed when the terminal block and the Unit with the same calibration control number are used together. Refer to *Precautions When Mounting the Terminal Block* on page 4-21 for details about precautions when mounting the terminal block.

Precautions When Mounting the Terminal Block

On a Temperature Control Unit, a cold junction sensor is mounted to the terminal block.

The overall accuracy is guaranteed when you use the terminal block on which a cold junction sensor is mounted and the Unit of the same calibration control number.

Be sure to use the terminal block and the Unit with the same calibration control number together.

There is a label with the calibration control number on the terminal block as shown in the figure below, and the calibration control number is printed on the Unit side.

● 12 mm Width

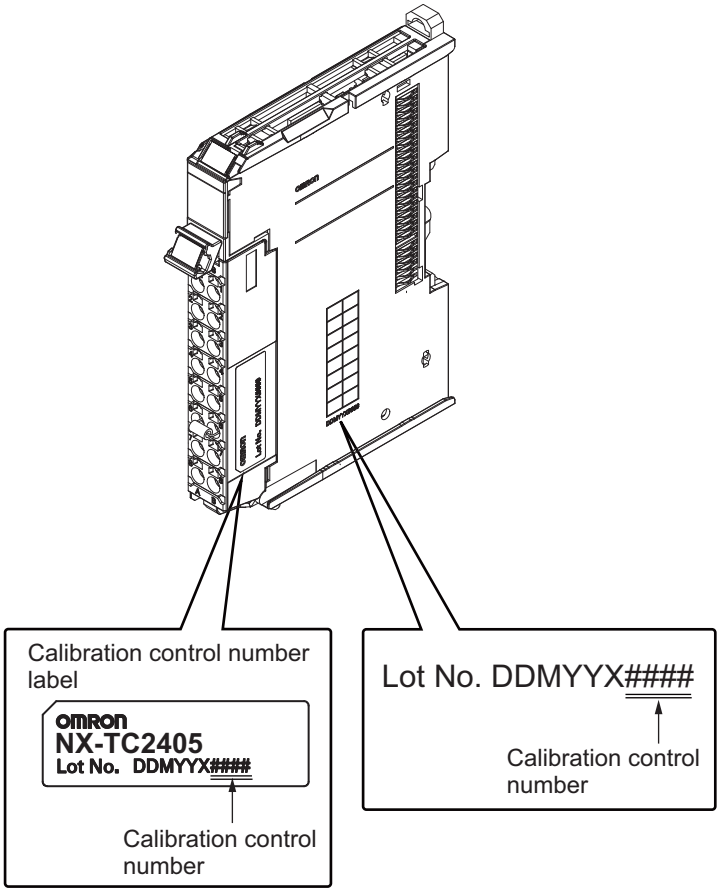

● 24 mm Width

The left and right terminal blocks have the same calibration control number. In order to distinguish these two terminal blocks, each terminal block has either "L" (left side) or "R" (right side) appended at the end as shown in the figure below.

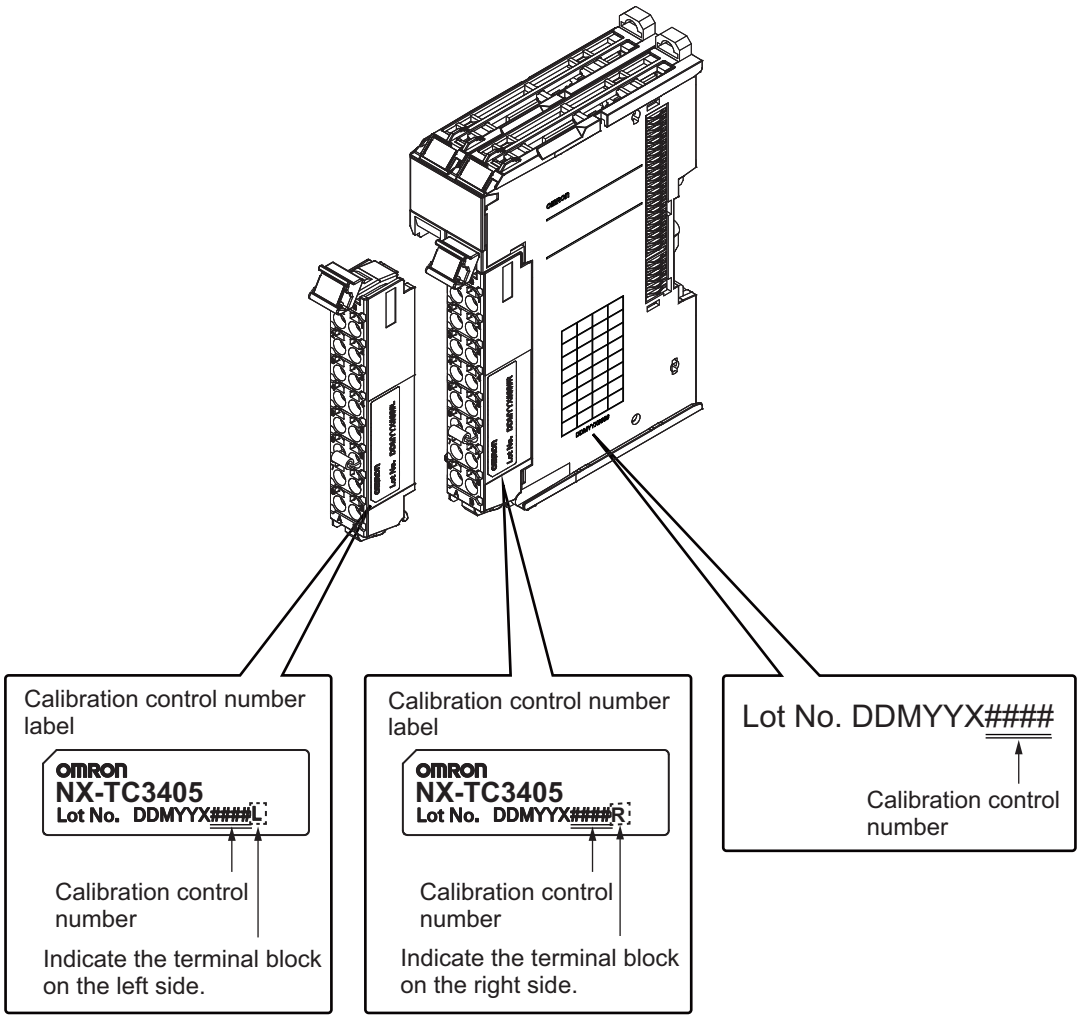

Make sure to return the terminal block and the Temperature Control Unit together.

Preventing Incorrect Attachment of Terminal Blocks

In order to prevent unintentionally installing the wrong terminal block, you can limit the combination of a Unit and a terminal block.

Insert three Coding Pins (NX-AUX02) into three of the six incorrect attachment prevention holes on the Unit and on the terminal block. Insert these pins into positions so that they do not interfere with each other when the Unit and terminal block are connected to each other.

You can use these pins to create a combination in which the wrong terminal block cannot be attached because the pin patterns do not match.

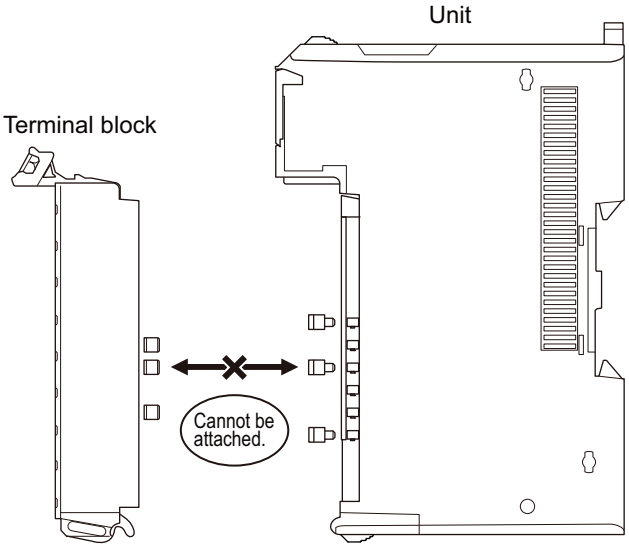

Types of Coding Pins

There are two types of Coding Pins, both with their own unique shape: one for terminal blocks and one for Units.

Three pins come with each runner.

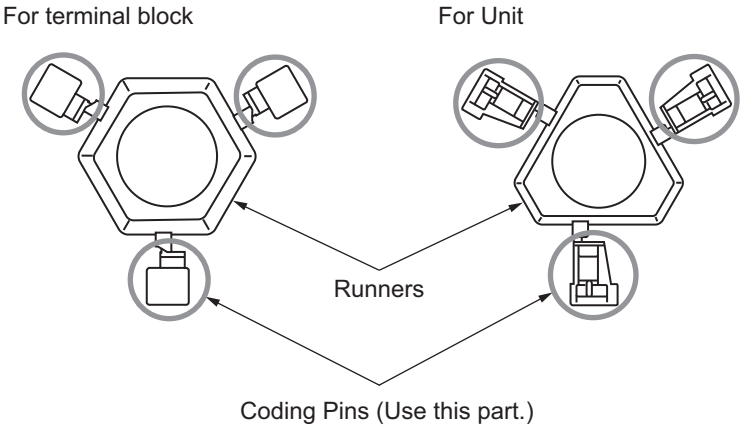

Use the following Coding Pins.

Name	Model	Specification
Coding Pin	NX-AUX02	For 10 Units (Terminal block: 30 pins, Unit: 30 pins)

Insertion Locations and Patterns of Coding Pins

Insert three Coding Pins of each on the terminal block and on the Unit at the positions designated by the numbers 1 through 6 in the figure below.

As shown in the following table, there are 20 unique pin patterns that can be used.

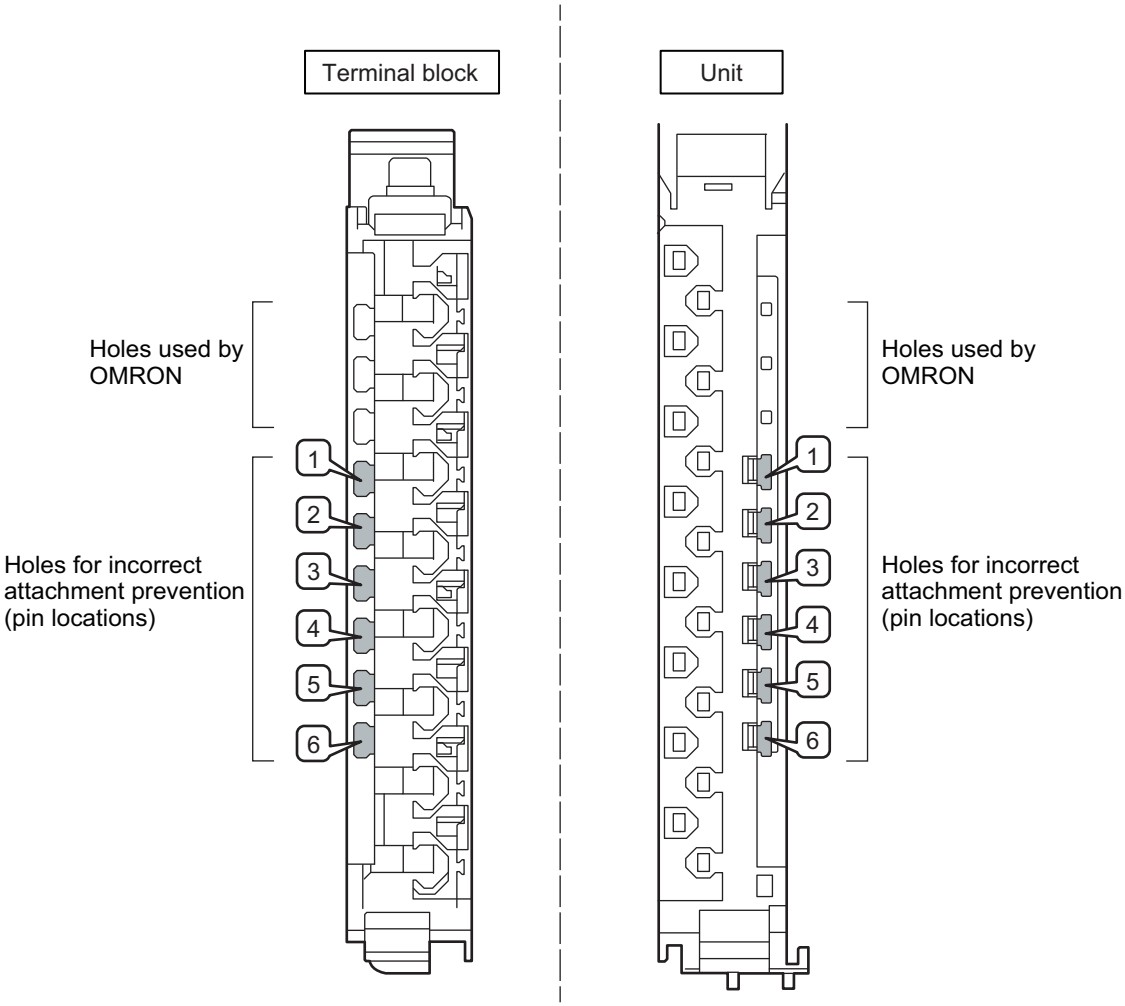

○: Pin inserted

Pattern	Pin locations for terminal block						Pin locations for Unit					
	1	2	3	4	5	6	1	2	3	4	5	6
No.1	○	○	○							○	○	○
No.2	○	○		○					○		○	○
No.3	○	○			○				○	○		○
No.4	○	○				○			○	○	○	
No.5	○		○	○				○			○	○
No.6	○		○		○			○		○		○
No.7	○		○			○		○		○	○	
No.8	○			○	○			○	○			○
No.9	○			○		○		○	○		○	
No.10	○				○	○		○	○	○		
No.11		○	○	○			○				○	○
No.12		○	○		○		○			○		○
No.13		○	○			○	○			○	○	
No.14		○		○	○		○		○			○
No.15		○		○		○	○		○		○	
No.16		○			○	○	○		○	○		
No.17			○	○	○		○	○				○
No.18			○	○		○	○	○			○	
No.19			○		○	○	○	○		○		
No.20				○	○	○	○	○	○			

To make the maximum of 20 patterns, purchase two sets of NX-AUX02 Pins. (One set for 10 Units.)

Precautions for Correct Use

- OMRON uses the holes other than No. 1 to 6 in the figure on the previous page. If you insert a Coding Pin into one of the holes used by OMRON on the terminal block side, this makes it impossible to mount the terminal block on a Unit.
- Do not use Coding Pins that have been attached and removed.

Inserting the Coding Pins

1 Hold the pins by the runner and insert a pin into one of the incorrect attachment prevention holes on the terminal block or on the Unit.

Terminal block

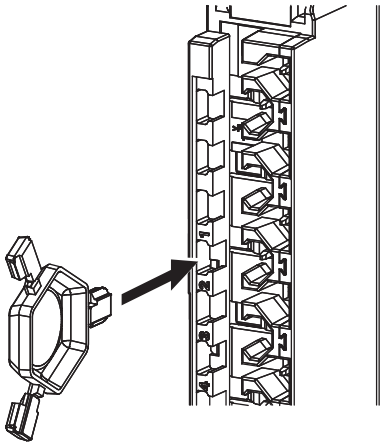

Unit

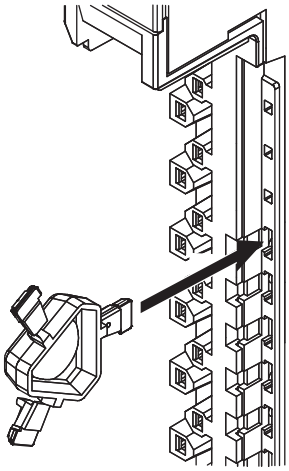

2 Rotate the runner to break off the Coding Pins.

Terminal block

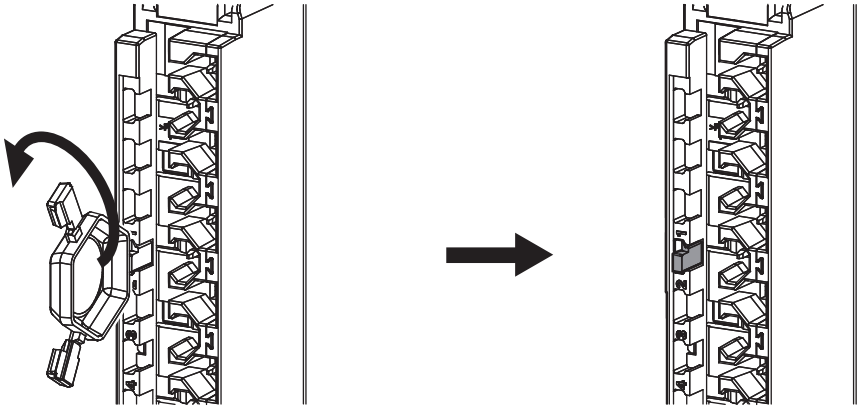

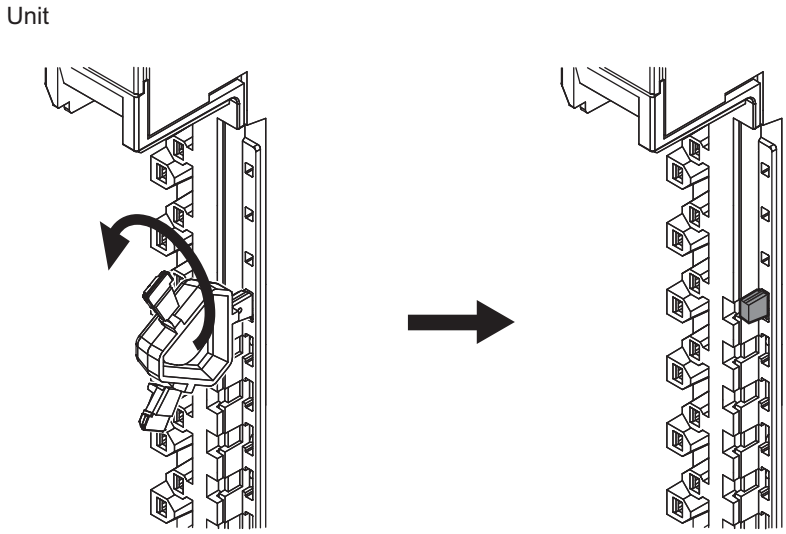

4-3-2 Checking the Wiring

Check the wiring from the Watch Tab Page or other interface of the Support Software by reading Slave Terminal input data and writing Slave Terminal output data.

For Input Units, you can turn ON/OFF the inputs from external devices that are connected to the target Units and monitor the results.

For Output Units, you can control the I/O outputs of the target Units and check the operation of the connected external devices.

Refer to the operation manual for your Support Software for details on monitoring and output operations for I/O.

Additional Information

In the Sysmac Studio, you can check the wiring from the I/O Map or Watch Tab Page. If you use the I/O Map, you can also monitor and perform forced refreshing even if the variables are not defined or the algorithms are not created. Therefore, you can easily check the wiring. Refer to the *Sysmac Studio Version 1 Operation Manual* (Cat. No. W504) for details on monitoring and forced refreshing operations.

Method of Checking the Wiring by the I/O Check Function

Some Communications Coupler Units support I/O checking that allows you to check wiring with only the Slave Terminal. Refer to the user's manual of the Communications Coupler Unit for detailed information on the support and functionality of I/O checking for your Communications Coupler Unit.

The method of checking the wiring by the I/O check function of the Temperature Control Unit is described below. The checking method differs depending on whether control is performed as PID control or ON/OFF control. Note that even if you set a value to an operation command, the command is not executed by the I/O check function.

Precautions for Safe Use

To check the output by the I/O check function, first confirm a method with which the output is turned OFF in a state in which the temperature can be measured, and then check the output.

For PID Control

If the I/O check function is used in PID control, the Temperature Control Unit operates in Manual Mode. The set MV is reflected in manual MV, and output is performed from the corresponding terminal of control output.

Function of terminal	Output state	Checking method
Control output at heating side	ON	Set a value greater than "0.0" (%) in "Ch□ Manual MV (INT)" or "Ch□ Manual MV (REAL)".
	OFF	Set "0.0" (%) in "Ch□ Manual MV (INT)" or "Ch□ Manual MV (REAL)".
Control output at cooling side	ON	Set a value smaller than "0.0" (%) in "Ch□ Manual MV (INT)" or "Ch□ Manual MV (REAL)".
	OFF	Set "0.0" (%) in "Ch□ Manual MV (INT)" or "Ch□ Manual MV (REAL)".

For ON/OFF Control

If the I/O check function is used in ON/OFF control, the Temperature Control Unit starts the control in Auto Mode. If the set point is changed with reference to the measured value, output is performed from the corresponding terminal of control output.

Function of terminal	Output state	Checking method
Control output at heating side	ON	Set a value greater than the value obtained by adding "Ch□ Measured Value (INT)" and "Ch□ Hysteresis (Heating)" in "Ch□ Set Point (INT)", and perform checking. Else, set a value greater than the value obtained by adding "Ch□ Measured Value (REAL)" and "Ch□ Hysteresis (Heating)" in "Ch□ Set Point (REAL)", and perform checking.
	OFF	Set a value smaller than "Ch□ Measured Value (INT)" in "Ch□ Set Point (INT)", and perform checking. Else, set a value smaller than "Ch□ Measured Value (REAL)" in "Ch□ Set Point (REAL)", and perform checking.
Control output at cooling side	ON	Set a value smaller than the value obtained by subtracting "Ch□ Hysteresis (Cooling)" from "Ch□ Measured Value (INT)" in "Ch□ Set Point (INT)", and perform checking. Else, set a value smaller than the value obtained by subtracting "Ch□ Hysteresis (Cooling)" from "Ch□ Measured Value (REAL)" in "Ch□ Set Point (REAL)", and perform checking.
	OFF	Set a value greater than "Ch□ Measured Value (INT)" in "Ch□ Set Point (INT)", and perform checking. Else, set a value greater than "Ch□ Measured Value (REAL)" in "Ch□ Set Point (REAL)", and perform checking.

4-4 Terminal Arrangement and Wiring Examples

This section describes examples of terminal arrangements and wiring, switching the allowable load resistance, and precautions during wiring work for the Temperature Control Unit.

4-4-1 Terminal Arrangement and Wiring Examples for Each Model

This section describes a wiring example for each model of Temperature Control Units.

Precautions for Safe Use

Before you perform wiring or maintenance work, always confirm that the power supply to the heater is turned OFF. If you provide power to the heater while the CT terminals are open, a high voltage will occur between the CT terminals, which creates an electric shock hazard.

Precautions for Correct Use

- To ensure this NX Unit is kept in the best operating condition, observe the following points when wiring to avoid the effects of the noise.
  a) Wire the sensor connection lines and power lines (e.g., AC power supply lines or power lines) separately. Do not place such lines in the same duct.
  b) Insert a noise filter into the power supply input section if noise comes from power supply lines when using the same power supply to power an electrical welder or an electric discharge machine, or there is a high-frequency source nearby.
- Do not touch a cold junction sensor that is mounted to the terminal block on a Temperature Control Unit. The temperature may not be measured correctly and the cold junction sensor may be disconnected.

When wiring the voltage output (for driving SSR) control outputs (OUT□), wire the polarity of the internal I/O common terminal correctly. The internal I/O common terminal for control outputs has PNP polarity. The common side (24 VDC) is internally connected to 24 VDC of the I/O power supply through the NX bus.
When I/O power is supplied from the Communications Coupler Unit to which the Temperature Control Unit is connected, an Additional I/O Power Supply Unit in the wiring example is not necessary.

NX-TC2405

● Terminal Arrangement

Ch1			
Pin No.	**Letter**	**I/O**	**Operation**
A1	CT1+	I	CT input (+)
A2	CT1-	I	CT input (-)
A3	OUT1	O	Heating-side control output (+)*1
A4	IOG1	O	Heating-side control output (-)*1
A5	CJ1+	I	Cold junction sensor input (+)
A6	B1/TC1+	I	Resistance thermometer input (B)/Thermocouple input (+)
A7	B1/TC1-	I	Resistance thermometer input (B)/Thermocouple input (-)
A8	A1	I	Resistance thermometer input (A)

*1. This is for reverse operation. For direct operation, it becomes the cooling-side control output.

Ch2			
Pin No.	**Letter**	**I/O**	**Operation**
B1	CT2+	I	CT input (+)
B2	CT2-	I	CT input (-)
B3	OUT2	O	Heating-side control output (+)*1
B4	IOG2	O	Heating-side control output (-)*1
B5	CJ1-	I	Cold junction sensor input (-)
B6	B2/TC2+	I	Resistance thermometer input (B)/Thermocouple input (+)
B7	B2/TC2-	I	Resistance thermometer input (B)/Thermocouple input (-)
B8	A2	I	Resistance thermometer input (A)

*1. This is for reverse operation. For direct operation, it becomes the cooling-side control output.

● Wiring Example

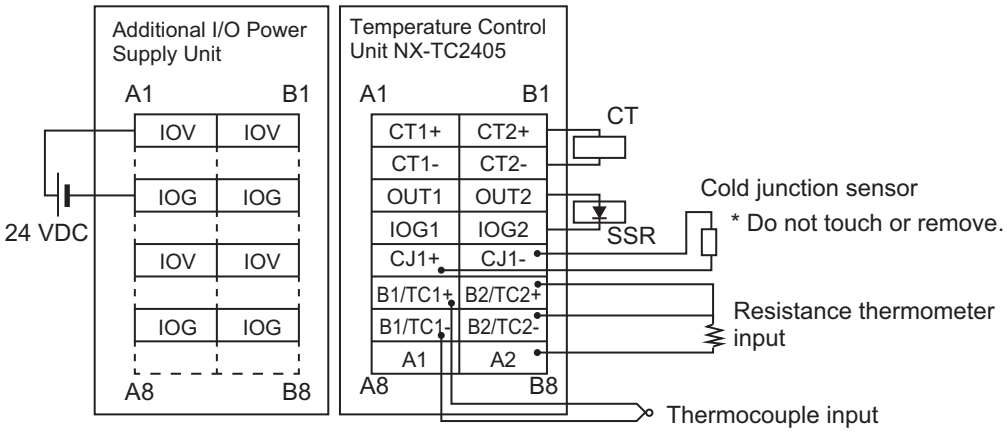

NX-TC2406

● Terminal Arrangement

Ch1			
Pin No.	**Letter**	**I/O**	**Operation**
A1	NC	-	Not used.
A2	NC	-	Not used.
A3	OUT1	O	Heating-side control output (+)*1
A4	IOG1	O	Heating-side control output (-)*1
A5	CJ1+	I	Cold junction sensor input (+)
A6	B1/TC1+	I	Resistance thermometer input (B)/Thermocouple input (+)
A7	B1/TC1-	I	Resistance thermometer input (B)/Thermocouple input (-)
A8	A1	I	Resistance thermometer input (A)

*1. This is for reverse operation. For direct operation, it becomes the cooling-side control output.

Ch2			
Pin No.	**Letter**	**I/O**	**Operation**
B1	NC	-	Not used.
B2	NC	-	Not used.
B3	OUT2	O	Heating-side control output (+)*1
B4	IOG2	O	Heating-side control output (-)*1
B5	CJ1-	I	Cold junction sensor input (+)
B6	B2/TC2+	I	Resistance thermometer input (B)/Thermocouple input (+)
B7	B2/TC2-	I	Resistance thermometer input (B)/Thermocouple input (-)
B8	A2	I	Resistance thermometer input (A)

*1. This is for reverse operation. For direct operation, it becomes the cooling-side control output.

● Wiring Example

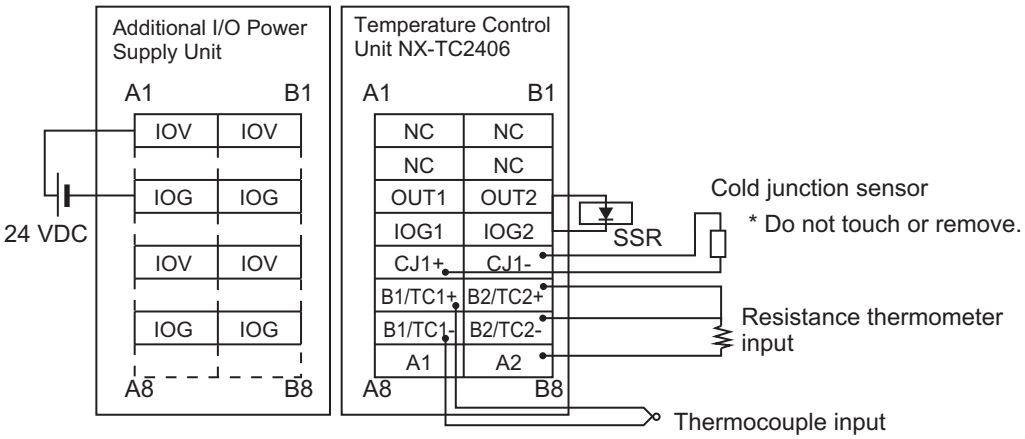

NX-TC2407

● Terminal Arrangement

Ch1			
Pin No.	**Letter**	**I/O**	**Operation**
A1	OUT1	O	Heating-side control output (+)*1
A2	IOG1	O	Heating-side control output (-)*1
A3	OUT3	O	Cooling-side control output (+)*1
A4	IOG3	O	Cooling-side control output (-)*1
A5	CJ1+	I	Cold junction sensor input (+)
A6	B1/TC1+	I	Resistance thermometer input (B)/Thermocouple input (+)
A7	B1/TC1-	I	Resistance thermometer input (B)/Thermocouple input (-)
A8	A1	I	Resistance thermometer input (A)

*1. This is for reverse operation. For direct operation, the heating-side and cooling-side control outputs are reversed.

Ch2			
Pin No.	**Letter**	**I/O**	**Operation**
B1	OUT2	O	Heating-side control output (+)*1
B2	IOG2	O	Heating-side control output (-)*1
B3	OUT4	O	Cooling-side control output (+)*1
B4	IOG4	O	Cooling-side control output (-)*1
B5	CJ1-	I	Cold junction sensor input (+)
B6	B2/TC2+	I	Resistance thermometer input (B)/Thermocouple input (+)
B7	B2/TC2-	I	Resistance thermometer input (B)/Thermocouple input (-)
B8	A2	I	Resistance thermometer input (A)

*1. This is for reverse operation. For direct operation, the heating-side and cooling-side control outputs are reversed.

● Wiring Example

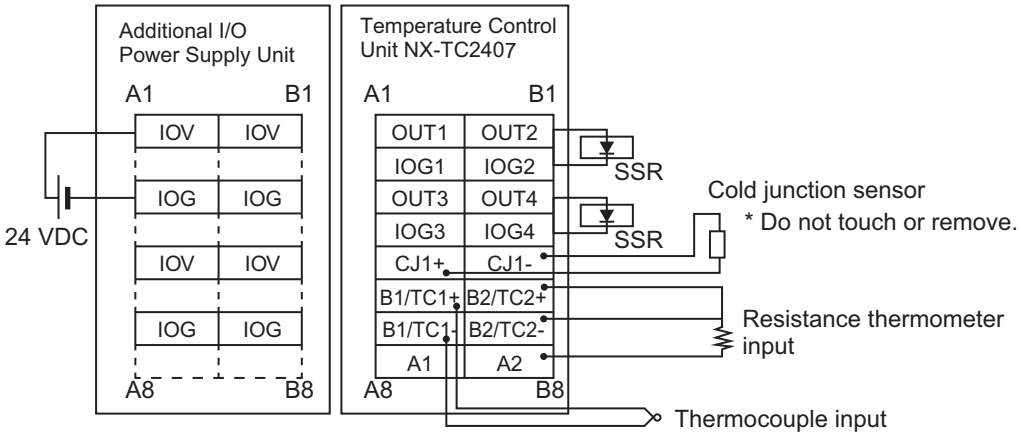

NX-TC2408

● Terminal Arrangement

Ch1			
Pin No.	**Letter**	**I/O**	**Operation**
A1	NC	-	Not used.
A2	SHT1	I	Switch allowable load resistance
A3	OUT1	O	Heating-side control output (+)*1
A4	IOG1	O	Heating-side control output (-)*1
A5	CJ1+	I	Cold junction sensor (+)
A6	B1/TC1+	I	Resistance thermometer input (B)/Thermocouple input (+)
A7	B1/TC1-	I	Resistance thermometer input (B)/Thermocouple input (-)
A8	A1	I	Resistance thermometer input (A)

*1. This is for reverse operation. For direct operation, it becomes the cooling-side control output.

Ch2			
Pin No.	**Letter**	**I/O**	**Operation**
B1	NC	-	Not used.
B2	SHT2	I	Switch allowable load resistance
B3	OUT2	O	Heating-side control output (+)*1
B4	IOG2	O	Heating-side control output (-)*1
B5	CJ1-	I	Cold junction sensor (-)
B6	B2/TC2+	I	Resistance thermometer input (B)/Thermocouple input (+)
B7	B2/TC2-	I	Resistance thermometer input (B)/Thermocouple input (-)
B8	A2	I	Resistance thermometer input (A)

*1. This is for reverse operation. For direct operation, it becomes the cooling-side control output.

● Wiring Example

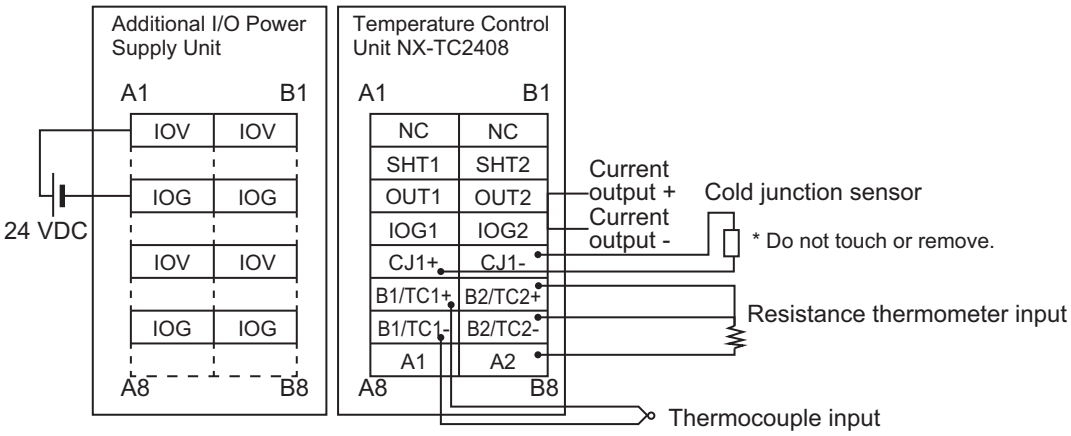

When the allowable load resistance of the linear current output is in the following range, short-circuit the SHT□ terminals with cables.

- 350 Ω < allowable load resistance ≤ 600 Ω

Refer to *4-4-2 Switching the Allowable Load Resistance* on page 4-41 for the wiring procedure.

NX-TC3405

● Terminal Arrangement

Ch1			
Pin No.	**Letter**	**I/O**	**Operation**
A1	CT1+	I	CT input (+)
A2	CT1-	I	CT input (-)
A3	OUT1	O	Heating-side control output (+)*1
A4	IOG1	O	Heating-side control output (-)*1
A5	CJ1+	I	Cold junction sensor input (+)
A6	B1/TC1+	I	Resistance thermometer input (B)/Thermocouple input (+)
A7	B1/TC1-	I	Resistance thermometer input (B)/Thermocouple input (-)
A8	A1	I	Resistance thermometer input (A)

*1. This is for reverse operation. For direct operation, it becomes the cooling-side control output.

Ch2			
Pin No.	**Letter**	**I/O**	**Operation**
B1	CT2+	I	CT input (+)
B2	CT2-	I	CT input (-)
B3	OUT2	O	Heating-side control output (+)*1
B4	IOG2	O	Heating-side control output (-)*1
B5	CJ1-	I	Cold junction sensor input (-)
B6	B2/TC2+	I	Resistance thermometer input (B)/Thermocouple input (+)
B7	B2/TC2-	I	Resistance thermometer input (B)/Thermocouple input (-)
B8	A2	I	Resistance thermometer input (A)

*1. This is for reverse operation. For direct operation, it becomes the cooling-side control output.

Ch3			
Pin No.	**Letter**	**I/O**	**Operation**
C1	CT3+	I	CT input (+)
C2	CT3-	I	CT input (-)
C3	OUT3	O	Heating-side control output (+)*1
C4	IOG3	O	Heating-side control output (-)*1
C5	CJ2+	I	Cold junction sensor input (+)
C6	B3/TC3+	I	Resistance thermometer input (B)/Thermocouple input (+)
C7	B3/TC3-	I	Resistance thermometer input (B)/Thermocouple input (-)
C8	A3	I	Resistance thermometer input (A)

*1. This is for reverse operation. For direct operation, it becomes the cooling-side control output.

Ch4			
Pin No.	**Letter**	**I/O**	**Operation**
D1	CT4+	I	CT input (+)
D2	CT4-	I	CT input (-)
D3	OUT4	O	Heating-side control output (+)*1
D4	IOG4	O	Heating-side control output (-)*1
D5	CJ2-	I	Cold junction sensor input (-)
D6	B4/TC4+	I	Resistance thermometer input (B)/Thermocouple input (+)
D7	B4/TC4-	I	Resistance thermometer input (B)/Thermocouple input (-)
D8	A4	I	Resistance thermometer input (A)

*1. This is for reverse operation. For direct operation, it becomes the cooling-side control output.

● Wiring Example

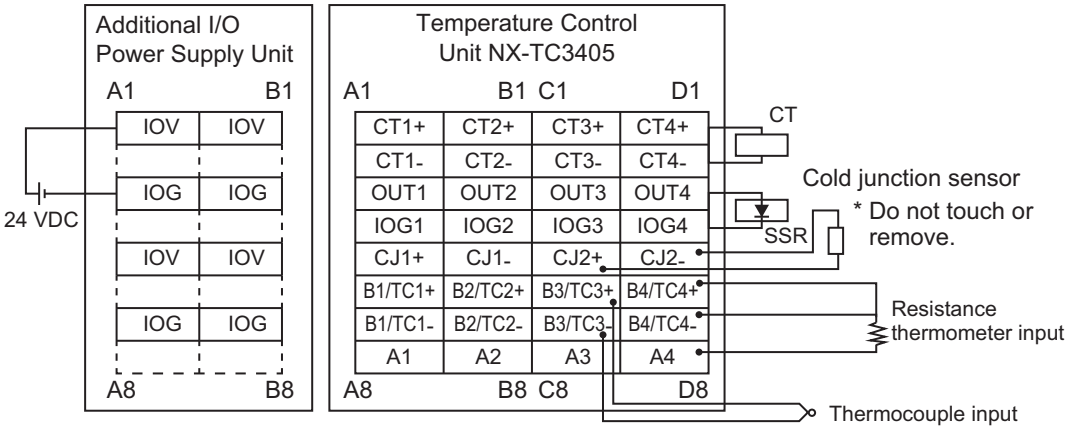

NX-TC3406

● Terminal Arrangement

Ch1			
Pin No.	**Letter**	**I/O**	**Operation**
A1	NC	-	Not used.
A2	NC	-	Not used.
A3	OUT1	O	Heating-side control output (+)*1
A4	IOG1	O	Heating-side control output (-)*1
A5	CJ1+	I	Cold junction sensor input (+)
A6	B1/TC1+	I	Resistance thermometer input (B)/Thermocouple input (+)
A7	B1/TC1-	I	Resistance thermometer input (B)/Thermocouple input (-)
A8	A1	I	Resistance thermometer input (A)

*1. This is for reverse operation. For direct operation, it becomes the cooling-side control output.

Ch2			
Pin No.	**Letter**	**I/O**	**Operation**
B1	NC	-	Not used.
B2	NC	-	Not used.
B3	OUT2	O	Heating-side control output (+)*1
B4	IOG2	O	Heating-side control output (-)*1
B5	CJ1-	I	Cold junction sensor input (-)
B6	B2/TC2+	I	Resistance thermometer input (B)/Thermocouple input (+)
B7	B2/TC2-	I	Resistance thermometer input (B)/Thermocouple input (-)
B8	A2	I	Resistance thermometer input (A)

*1. This is for reverse operation. For direct operation, it becomes the cooling-side control output.

Ch3			
Pin No.	**Letter**	**I/O**	**Operation**
C1	NC	-	Not used.
C2	NC	-	Not used.
C3	OUT3	O	Heating-side control output (+)*1
C4	IOG3	O	Heating-side control output (-)*1
C5	CJ2+	I	Cold junction sensor input (+)
C6	B3/TC3+	I	Resistance thermometer input (B)/Thermocouple input (+)
C7	B3/TC3-	I	Resistance thermometer input (B)/Thermocouple input (-)
C8	A3	I	Resistance thermometer input (A)

*1. This is for reverse operation. For direct operation, it becomes the cooling-side control output.

Ch4			
Pin No.	**Letter**	**I/O**	**Operation**
D1	NC	-	Not used.
D2	NC	-	Not used.
D3	OUT4	O	Heating-side control output (+)*1
D4	IOG4	O	Heating-side control output (-)*1
D5	CJ2-	I	Cold junction sensor input (-)
D6	B4/TC4+	I	Resistance thermometer input (B)/Thermocouple input (+)
D7	B4/TC4-	I	Resistance thermometer input (B)/Thermocouple input (-)
D8	A4	I	Resistance thermometer input (A)

*1. This is for reverse operation. For direct operation, it becomes the cooling-side control output.

● Wiring Example

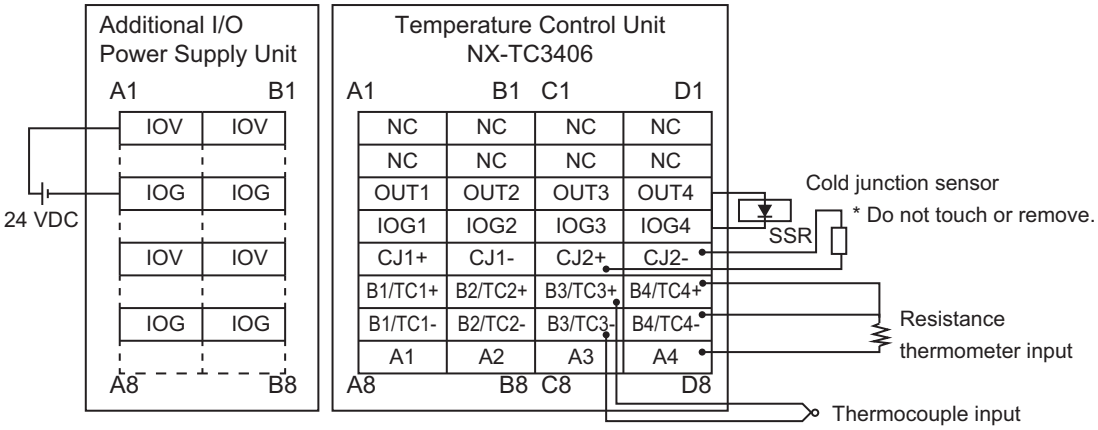

NX-TC3407

● Terminal Arrangement

Ch1			
Pin No.	**Letter**	**I/O**	**Operation**
A1	OUT1	O	Heating-side control output (+)*1
A2	IOG1	O	Heating-side control output (-)*1
A3	OUT5	O	Cooling-side control output (+)*1
A4	IOG5	O	Cooling-side control output (-)*1
A5	CJ1+	I	Cold junction sensor input (+)
A6	B1/TC1+	I	Resistance thermometer input (B)/Thermocouple input (+)
A7	B1/TC1-	I	Resistance thermometer input (B)/Thermocouple input (-)
A8	A1	I	Resistance thermometer input (A)

*1. This is for reverse operation. For direct operation, the heating-side and cooling-side control outputs are reversed.

Ch2			
Pin No.	**Letter**	**I/O**	**Operation**
B1	OUT2	O	Heating-side control output (+)*1
B2	IOG2	O	Heating-side control output (-)*1
B3	OUT6	O	Cooling-side control output (+)*1
B4	IOG6	O	Cooling-side control output (-)*1
B5	CJ1-	I	Cold junction sensor input (-)
B6	B2/TC2+	I	Resistance thermometer input (B)/Thermocouple input (+)
B7	B2/TC2-	I	Resistance thermometer input (B)/Thermocouple input (-)
B8	A2	I	Resistance thermometer input (A)

*1. This is for reverse operation. For direct operation, the heating-side and cooling-side control outputs are reversed.

Ch3			
Pin No.	**Letter**	**I/O**	**Operation**
C1	OUT3	O	Heating-side control output (+)*1
C2	IOG3	O	Heating-side control output (-)*1
C3	OUT7	O	Cooling-side control output (+)*1
C4	IOG7	O	Cooling-side control output (-)*1
C5	CJ2+	I	Cold junction sensor input (+)
C6	B3/TC3+	I	Resistance thermometer input (B)/Thermocouple input (+)
C7	B3/TC3-	I	Resistance thermometer input (B)/Thermocouple input (-)
C8	A3	I	Resistance thermometer input (A)

*1. This is for reverse operation. For direct operation, the heating-side and cooling-side control outputs are reversed.

Ch4			
Pin No.	**Letter**	**I/O**	**Operation**
D1	OUT4	O	Heating-side control output (+)*1
D2	IOG4	O	Heating-side control output (-)*1
D3	OUT8	O	Cooling-side control output (+)*1
D4	IOG8	O	Cooling-side control output (-)*1
D5	CJ2-	I	Cold junction sensor input (-)
D6	B4/TC4+	I	Resistance thermometer input (B)/Thermocouple input (+)
D7	B4/TC4-	I	Resistance thermometer input (B)/Thermocouple input (-)
D8	A4	I	Resistance thermometer input (A)

*1. This is for reverse operation. For direct operation, the heating-side and cooling-side control outputs are reversed.

● Wiring Example

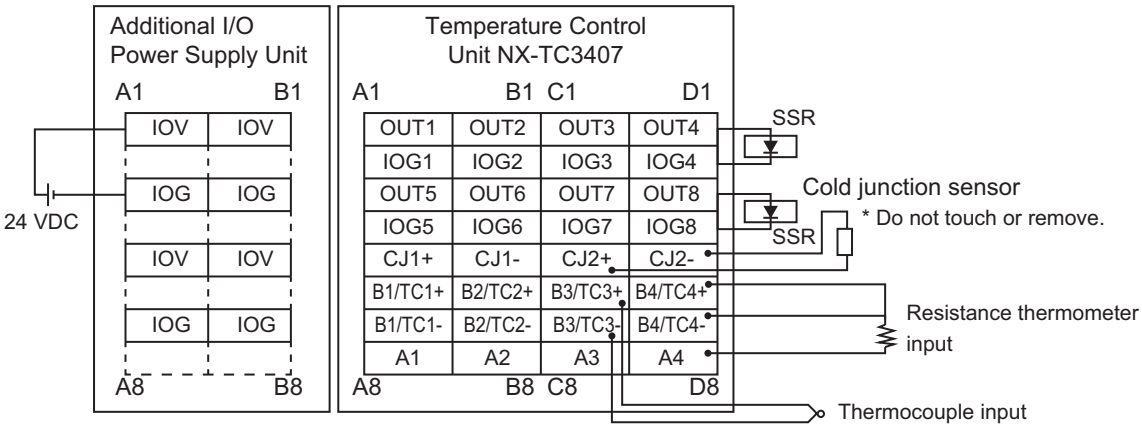

NX-TC3408

● Terminal Arrangement

Ch1			
Pin No.	**Letter**	**I/O**	**Operation**
A1	NC	-	Not used.
A2	SHT1	I	Switch allowable load resistance
A3	OUT1	O	Heating-side control output (+)*1
A4	IOG1	O	Heating-side control output (-)*1
A5	CJ1+	I	Cold junction sensor input (+)
A6	B1/TC1+	I	Resistance thermometer input (B)/Thermocouple input (+)
A7	B1/TC1-	I	Resistance thermometer input (B)/Thermocouple input (-)
A8	A1	I	Resistance thermometer input (A)

*1. This is for reverse operation. For direct operation, it becomes the cooling-side control output.

Ch2			
Pin No.	**Letter**	**I/O**	**Operation**
B1	NC	-	Not used.
B2	SHT2	I	Switch allowable load resistance
B3	OUT2	O	Heating-side control output (+)*1
B4	IOG2	O	Heating-side control output (-)*1
B5	CJ1-	I	Cold junction sensor input (-)
B6	B2/TC2+	I	Resistance thermometer input (B)/Thermocouple input (+)
B7	B2/TC2-	I	Resistance thermometer input (B)/Thermocouple input (-)
B8	A2	I	Resistance thermometer input (A)

*1. This is for reverse operation. For direct operation, it becomes the cooling-side control output.

Ch3			
Pin No.	**Letter**	**I/O**	**Operation**
C1	NC	-	Not used.
C2	SHT3	I	Switch allowable load resistance
C3	OUT3	O	Heating-side control output (+)*1
C4	IOG3	O	Heating-side control output (-)*1
C5	CJ2+	I	Cold junction sensor input (+)
C6	B3/TC3+	I	Resistance thermometer input (B)/Thermocouple input (+)
C7	B3/TC3-	I	Resistance thermometer input (B)/Thermocouple input (-)
C8	A3	I	Resistance thermometer input (A)

*1. This is for reverse operation. For direct operation, it becomes the cooling-side control output.

Ch4			
Pin No.	**Letter**	**I/O**	**Operation**
D1	NC	-	Not used.
D2	SHT4	I	Switch allowable load resistance
D3	OUT4	O	Heating-side control output (+)*1
D4	IOG4	O	Heating-side control output (-)*1
D5	CJ2-	I	Cold junction sensor input (-)
D6	B4/TC4+	I	Resistance thermometer input (B)/Thermocouple input (+)
D7	B4/TC4-	I	Resistance thermometer input (B)/Thermocouple input (-)
D8	A4	I	Resistance thermometer input (A)

*1. This is for reverse operation. For direct operation, it becomes the cooling-side control output.

● Wiring Example

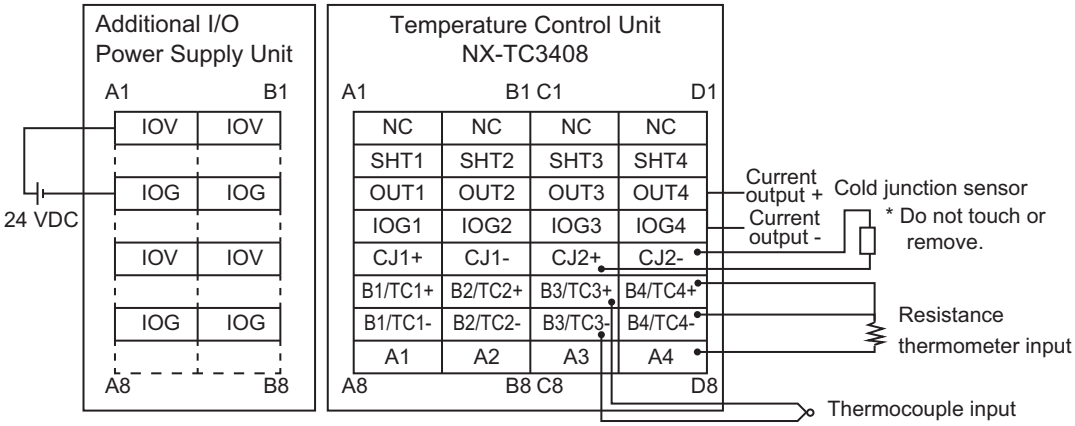

When the allowable load resistance of the linear current output is in the following range, short-circuit the SHT□ terminals with cables.

- 350 Ω < allowable load resistance ≤ 600 Ω

Refer to *4-4-2 Switching the Allowable Load Resistance* on page 4-41 for the wiring procedure.

4-4-2 Switching the Allowable Load Resistance

With NX-TC2408 and NX-TC3408 Units, you can apply the maximum level of allowable load resistance, i.e., 600 Ω, for the linear current output by short-circuiting the SHT terminals. The terminals are open as default at factory setting. The maximum allowable load resistance is 350 Ω when the terminal are open.

Allowable load resistance that switches according to the SHT terminal state

The allowable load resistance for the output terminals that can switch according to the state of the SHT1 and SHT2 terminals are shown below.

Output terminals	Allowable load resistance	
	SHT1 and SHT2 open	SHT1 and SHT2 shorted
OUT1	350 Ω max.	Greater than 350 Ω but not exceeding 600 Ω
OUT2	350 Ω max.	Greater than 350 Ω but not exceeding 600 Ω

The allowable load resistance for the output terminals that can switch according to the state of the SHT3 and SHT4 terminals are shown below.

Output terminals	Allowable load resistance	
	SHT3 and SHT4 open	SHT3 and SHT4 shorted
OUT3	350 Ω max.	Greater than 350 Ω but not exceeding 600 Ω
OUT4	350 Ω max.	Greater than 350 Ω but not exceeding 600 Ω

Precautions for Safe Use

When the allowable load resistance of the linear current output is switched, do not connect a load of 350 Ω or less. Internal heat generation may cause the Temperature Control Unit to malfunction.

Shorting cable

To short the SHT terminals, prepare a cable of maximum 5-cm long that meets screwless clamping terminal block specifications.

● Wiring Example

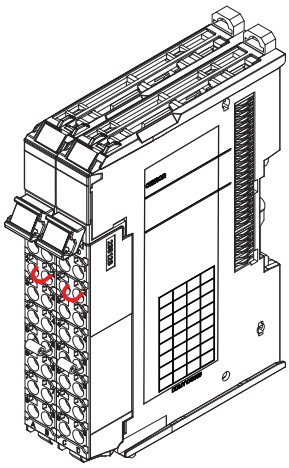

4-5 Installing Temperature Sensors for Packing Machines

The Temperature Sensor for packing machines (E52-CA □□ AF D=1 S□) is a 1.0 mm-diameter temperature sensor that is embedded in the heating plate. It has superior heat resistance and flexibility.

To measure the temperature close to the seal surface, mount the Sensor as close as possible to the surface.

Refer to *7-5-2 Automatic Filter Adjustment* on page 7-60 for information on how to perform temperature control using a temperature sensor for packing machines. For details on the specifications, refer to *A-10 Temperature Sensor for Packing Machines* on page A-134.

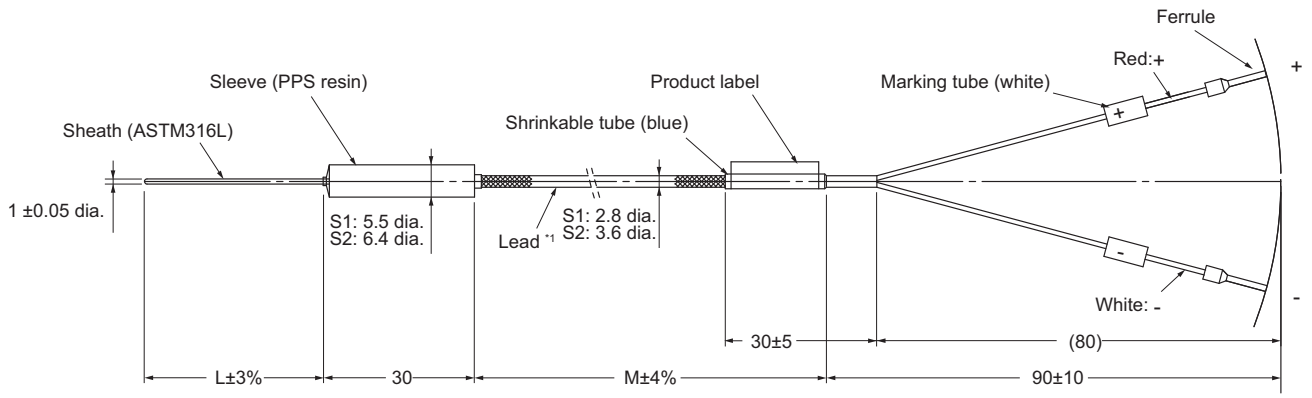

How to attach to the heating plate

We recommend using the following methods to mount a Temperature Sensor so that correct surface temperature is measured.

Example 1: Create a groove on the heating plate, and secure the Temperature Sensor to it with a mounting bracket.

Example 2: Create a groove on the heating plate, and secure the Temperature Sensor to it with a cover.

Example 3: Create a lateral hole in the heating plate and insert the Temperature Sensor into it.

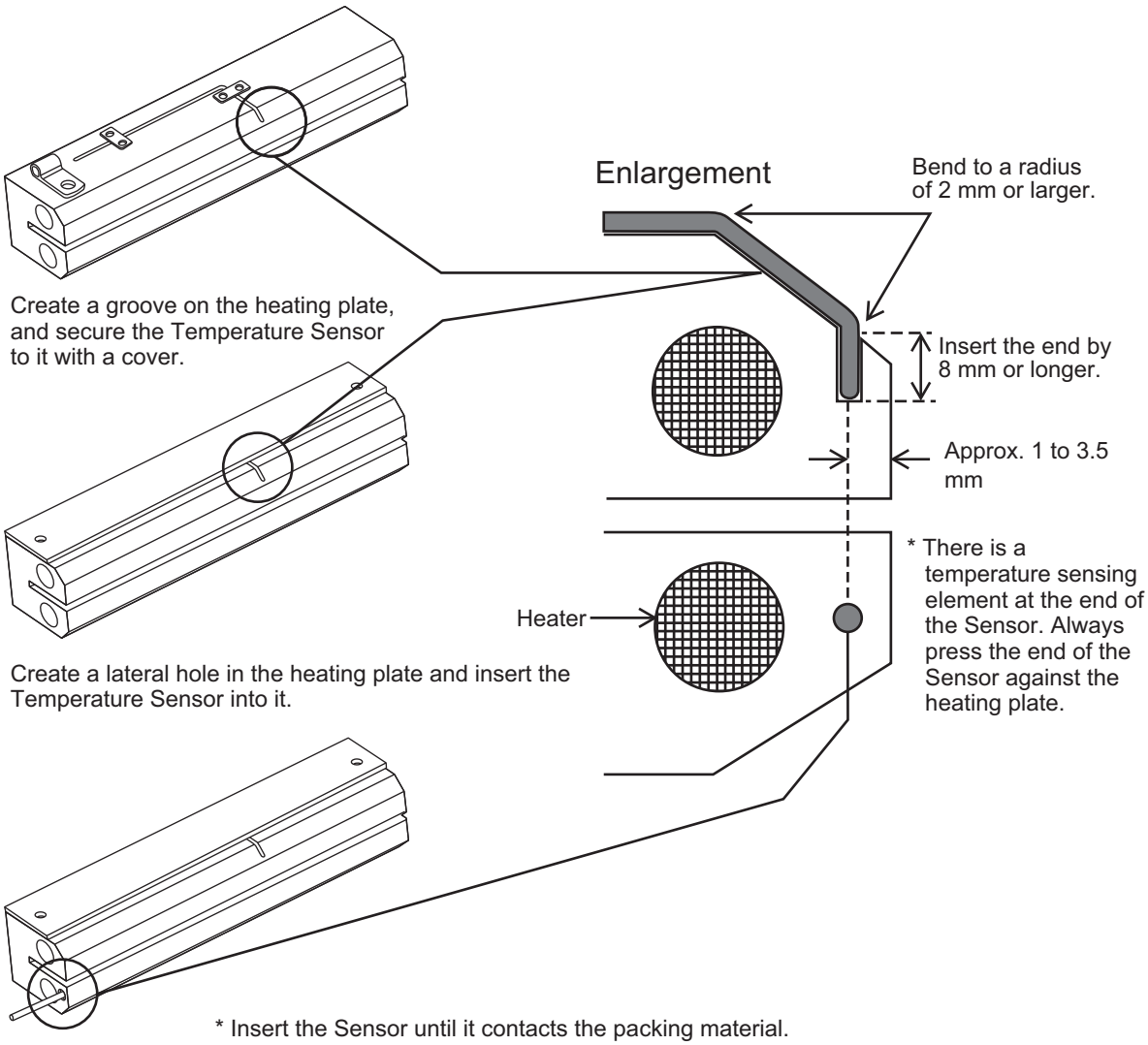

5

I/O Refreshing

This section describes the types and functions of I/O refreshing for the NX Units.

5-1 I/O Refreshing 5-2

5-1-1 I/O Refreshing from CPU Units to NX Units 5-2

5-1-2 I/O Refreshing from the CPU Unit or Industrial PC to Slave Terminals 5-3

5-1-3 Calculating the NX Unit I/O Response Times 5-4

5-2 I/O Refreshing Methods 5-5

5-2-1 Types of I/O Refreshing Methods 5-5

5-2-2 Setting the I/O Refreshing Methods 5-5

5-2-3 Free-Run Refreshing 5-7

5-1 I/O Refreshing

This section describes I/O refreshing for the NX Units.

5-1-1 I/O Refreshing from CPU Units to NX Units

The NX-series CPU Unit performs cyclical I/O refreshing of the NX Units.

The following period and two cycles affect operation of the I/O refreshing between the CPU Unit and the NX Units.

(a) Primary period in CPU Unit

(b) Refresh cycle of the NX bus

(c) Refresh cycle of each NX Unit

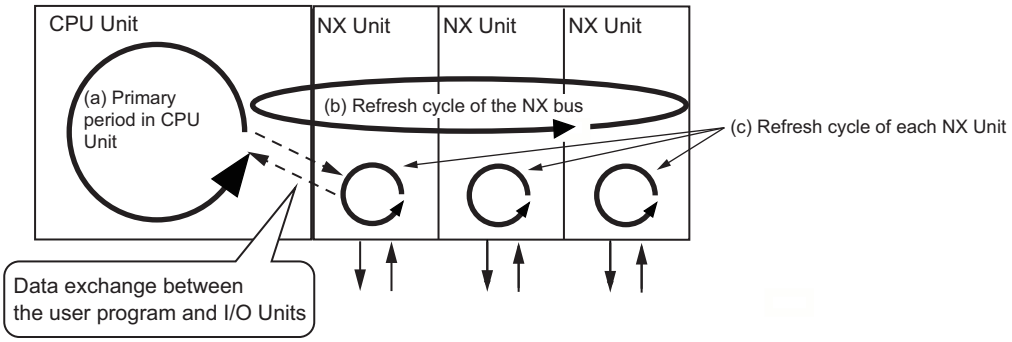

The following operation occurs.

- The refresh cycle of the NX bus in item (b) is automatically synchronized with the primary period of the CPU Unit in item (a).
- The refresh cycle of each NX Unit in item (c) depends on the I/O refreshing method which is given below.

Refer to the software user's manual for the connected CPU Unit for detailed information on I/O refreshing between the CPU Unit and the NX Units.

For details on the I/O response times of the NX Unit in a CPU rack, refer to *5-1-3 Calculating the NX Unit I/O Response Times* on page 5-4.

5-1-2 I/O Refreshing from the CPU Unit or Industrial PC to Slave Terminals

The CPU Unit or the Industrial PC performs I/O refreshing cyclically with the Slave Terminals through the Communications Master Unit and the Communications Coupler Unit.

The following four cycles affect operation of the I/O refreshing between the CPU Unit or the Industrial PC and the NX Units in a Slave Terminal:

(a) Cycle time of the CPU Unit or Industrial PC

(b) Communications cycle of the host network

(c) Refresh cycle of the NX bus

(d) Refresh cycle of each NX Unit

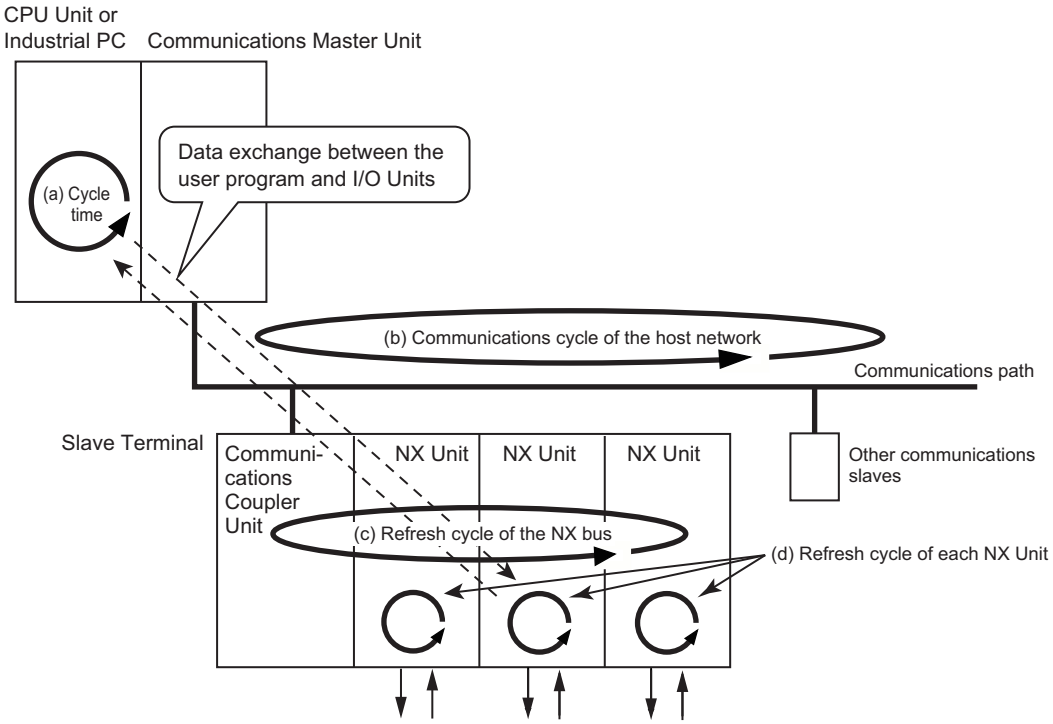

The cycle time of the CPU Unit or Industrial PC, the communications cycle of the host network, and the NX bus I/O refresh cycle are determined by the type of the CPU Unit or Industrial PC and the type of communications.

The following explains operations when the built-in EtherCAT port on the NJ/NX-series CPU Unit or NY-series Industrial PC is used for communications with an EtherCAT Slave Terminal, with symbols in the figure.

Refer to the user's manual for the connected Communications Coupler Unit for information on the operation of I/O refreshing for Slave Terminals other than EtherCAT Slave Terminals.

Operation of I/O Refreshing with NX-series CPU Unit

The following shows the operation of I/O refreshing when the built-in EtherCAT port on the NX-series CPU Unit is used for communications with an EtherCAT Slave Terminal.

- The process data communications cycle in item (b) and the refresh cycle of the NX bus in item (c) are automatically synchronized with the primary period or the task period of the priority-5 periodic task of the CPU Unit in item (a) when the distributed clock is enabled in the EtherCAT Coupler Unit.
- The refresh cycle of each NX Unit in item (d) depends on the I/O refreshing method which is given below.

The priority-5 periodic task must be supported by the connected CPU Unit model. Refer to the software user's manual for the connected CPU Unit for the periodic tasks supported by each model of NX-series CPU Unit.

Operation of I/O Refreshing with NJ-series CPU Unit or NY-series Industrial PC

The operation of I/O refreshing is as follows when the built-in EtherCAT port on the NJ-series CPU Unit or NY-series Industrial PC is used for communications with an EtherCAT Slave Terminal.

- The process data communications cycle in item (b) and the refresh cycle of the NX bus in item (c) are automatically synchronized with the primary period of the CPU Unit or Industrial PC in item (a).*1
- The refresh cycle of each NX Unit in item (d) depends on the I/O refreshing method which is given below.

*1. This applies when the distributed clock is enabled in the EtherCAT Coupler Unit.

Refer to the *NX-series EtherCAT Coupler Unit User's Manual* (Cat. No. W519-E1-08 or later) for detailed information on I/O refreshing between the built-in EtherCAT port and EtherCAT Slave Terminals.

For details on the I/O response times of the NX Unit in a slave terminal, refer to *5-1-3 Calculating the NX Unit I/O Response Times* on page 5-4.

5-1-3 Calculating the NX Unit I/O Response Times

Refer to the manuals shown below to calculate the NX Unit I/O response times according to where the NX Unit is connected.

● Connected to a CPU Unit

Manual name	Meaning
Manuals for the connected CPU Unit Software User's Manual	Describes the method to calculate the I/O response times of the NX Units in the CPU rack.
NX-series Data Reference Manual	Describes the parameter values used to calculate the I/O response times of the NX Units.

● Connected to a Communications Coupler Unit

Manual name	Meaning
User's manual for the connected Communications Coupler Unit	Describes the method to calculate the I/O response times of the NX Units at the Slave Terminal.
NX-series Data Reference Manual	Describes the parameter values used to calculate the I/O response times of the NX Units.

5-2 I/O Refreshing Methods

This section describes I/O refreshing methods for the NX Units.

5-2-1 Types of I/O Refreshing Methods

The I/O refreshing methods available between the CPU Unit or Communications Coupler Unit and the NX Units depend on the CPU Unit or Communications Coupler Unit that is used.

For the Temperature Control Units, the available method is fixed to the following Free-Run refreshing.

I/O refreshing method name	Outline of operation
Free-Run refreshing	With this I/O refreshing method, the refresh cycle of the NX bus and I/O refresh cycles of the NX Units are asynchronous.

Refer to the user's manual for the connected CPU Unit for information on I/O refreshing between the CPU Unit and the NX Units.

Refer to the software user's manual for the connected Communications Coupler Unit for information on I/O refreshing between the Communications Coupler Unit and the NX Units.

5-2-2 Setting the I/O Refreshing Methods

Setting Methods between the CPU Unit and the NX Units

The setting method for the I/O refreshing method between the CPU Unit and the NX Units is determined by the connected CPU Unit.
Refer to the software user's manual for the connected CPU Unit for information on the setting method for I/O refreshing between the CPU Unit and the NX Units.

An example is provided below for an NX-series NX1P2 CPU Unit. There is no setting for this in the NX1P2 CPU Unit. Refreshing is determined as described in the following table.

NX Units that support only Free-Run refreshing	NX Units that support both Free-Run refreshing and synchronous I/O refreshing	NX Units that support Free-Run refreshing, synchronous I/O refreshing, and task period prioritized refreshing	NX Units that support only time stamp refreshing*1
Free-Run refreshing	Synchronous I/O refreshing		Time stamp refreshing

*1. Two types of time stamp refreshing are available: one is input refreshing with input changed time and the other is output refreshing with specified time stamp.

As the Temperature Control Unit is an NX Unit that supports only the Free-Run refreshing method, it operates using Free-Run refreshing.

Setting Methods between the Communications Coupler Unit and the NX Units

The setting method for the I/O refreshing method between the Communications Coupler Unit and the NX Units is determined by the connected Communications Coupler Unit.
Refer to the user's manual for the connected Communications Coupler Unit for information on the setting method for I/O refreshing between the Communications Coupler Unit and the NX Units.

An example is provided below for when an EtherCAT Coupler Unit is connected to the built-in EtherCAT port on an NJ/NX-series CPU Unit or NY-series Industrial PC.
The I/O refreshing method between the EtherCAT Coupler Unit and each NX Unit depends on whether the DC is enabled in the EtherCAT Coupler Unit.

DC enable setting in the EtherCAT Coupler Unit	NX Units that support only Free-Run refreshing	NX Units that support both Free-Run refreshing and synchronous I/O refreshing	NX Units that support Free-Run refreshing, synchronous I/O refreshing, and task period prioritized refreshing	NX Units that support only time stamp refreshing
Enabled (DC for synchronization)*1	Free-Run refreshing	Synchronous I/O refreshing	Synchronous I/O refreshing	Time stamp refreshing
Enabled (DC with priority in cycle time)*1			Task period prioritized refreshing	
Disabled (FreeRun)*2		Free-Run refreshing	Free-Run refreshing	Operation with time stamp refreshing is not possible.*3

*1. The EtherCAT Slave Terminal operates in DC Mode.
*2. The EtherCAT Slave Terminal operates in Free-Run Mode.
*3. Refer to the manuals for the specific NX Units for details on the operation when the DC is set to *Disabled (FreeRun)*.

As the Temperature Control Unit is an NX Unit that supports only the Free-Run refreshing method, it operates using Free-Run refreshing.

5-2-3 Free-Run Refreshing

With this I/O refreshing method, the refresh cycle of the NX bus and I/O refresh cycles of the NX Units are asynchronous.

NX Units read inputs and refresh outputs during I/O refreshing.

This method is used when it is not necessary to be aware of factors such as the I/O timing jitter and the concurrency of the timing to read inputs and refresh outputs between the NX Units.

Description of CPU Unit Operation

The following describes the operation of Free-Run refreshing between the CPU Unit and Temperature Control Unit.

- The CPU Unit performs I/O refreshing for NX Units. (Refer to (a) in the figure below.)
- The Temperature Control Unit applies the latest input data and updates the output data when the I/Os are refreshed. (Refer to (b) in the figure below.)
- The CPU Unit can read the most recent input data during I/O refreshing.
  However, timing to read inputs or to refresh outputs is different for each NX Unit. (Refer to (c) in the figure below.)
- The interval of I/O refreshing varies with the processing conditions of the CPU Unit. Therefore, the interval of the timing to read inputs or to refresh outputs for NX Unit is not always the same. (Refer to (d) in the figure below.)
- The Temperature Control Unit repeatedly reads the input and refreshes the output amount (manipulated variable) in the order of the channels at a 50-ms sampling period, which is asynchronous with the NX bus refresh cycle.
- The output amount (manipulated variable) is applied to the output at the start of the control period, which is asynchronous with the sampling period. (Refer to (e) in the figure below.)

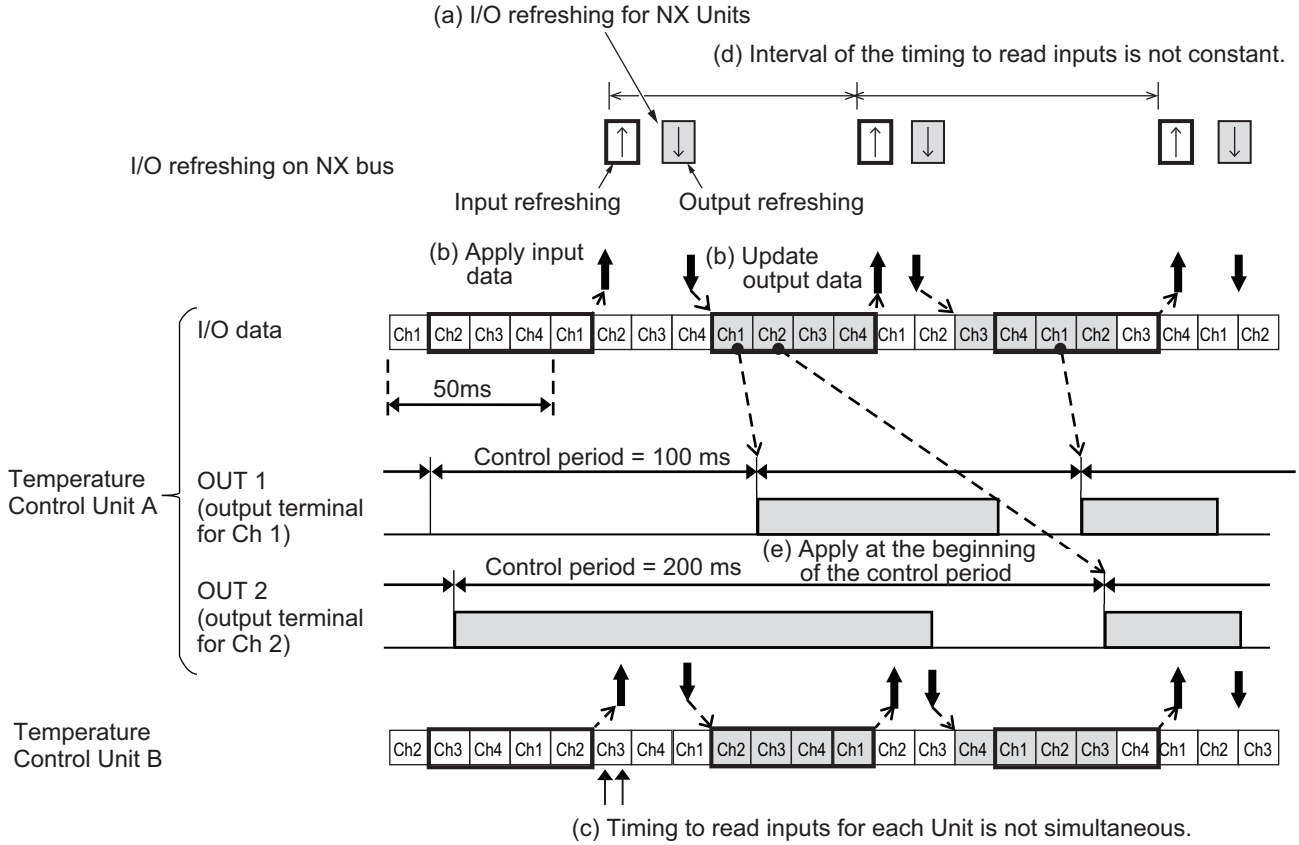

Description of Slave Terminal Operation

The following describes the operation of Free-Run refreshing between the Communications Coupler Unit and Temperature Control Unit.

- The Communications Coupler Unit performs I/O refreshing for NX Units. (Refer to (a) in the figure below.)
- The Temperature Control Unit applies the latest input data and updates the output data when the I/Os are refreshed. (Refer to (b) in the figure below.)
- The Communications Coupler Unit can read the most recent input data during I/O refreshing. However, timing to read inputs or to refresh outputs for each NX Unit in the Slave Terminal does not occur at the same time. (Refer to (c) in the figure below.)
- The I/O refreshing interval changes according to the processing conditions of the Communications Coupler Unit and host communications master. Therefore, the interval of the timing to read inputs or to refresh outputs for NX Unit is not always the same. (Refer to (d) in the figure below.)
- The Temperature Control Unit repeatedly reads the input and refreshes the output amount (manipulated variable) in the order of the channels at a 50-ms sampling period, which is asynchronous with the NX bus refresh cycle.
- The output amount (manipulated variable) is applied to the output at the start of the control period, which is asynchronous with the sampling period. (Refer to (e) in the figure below.)

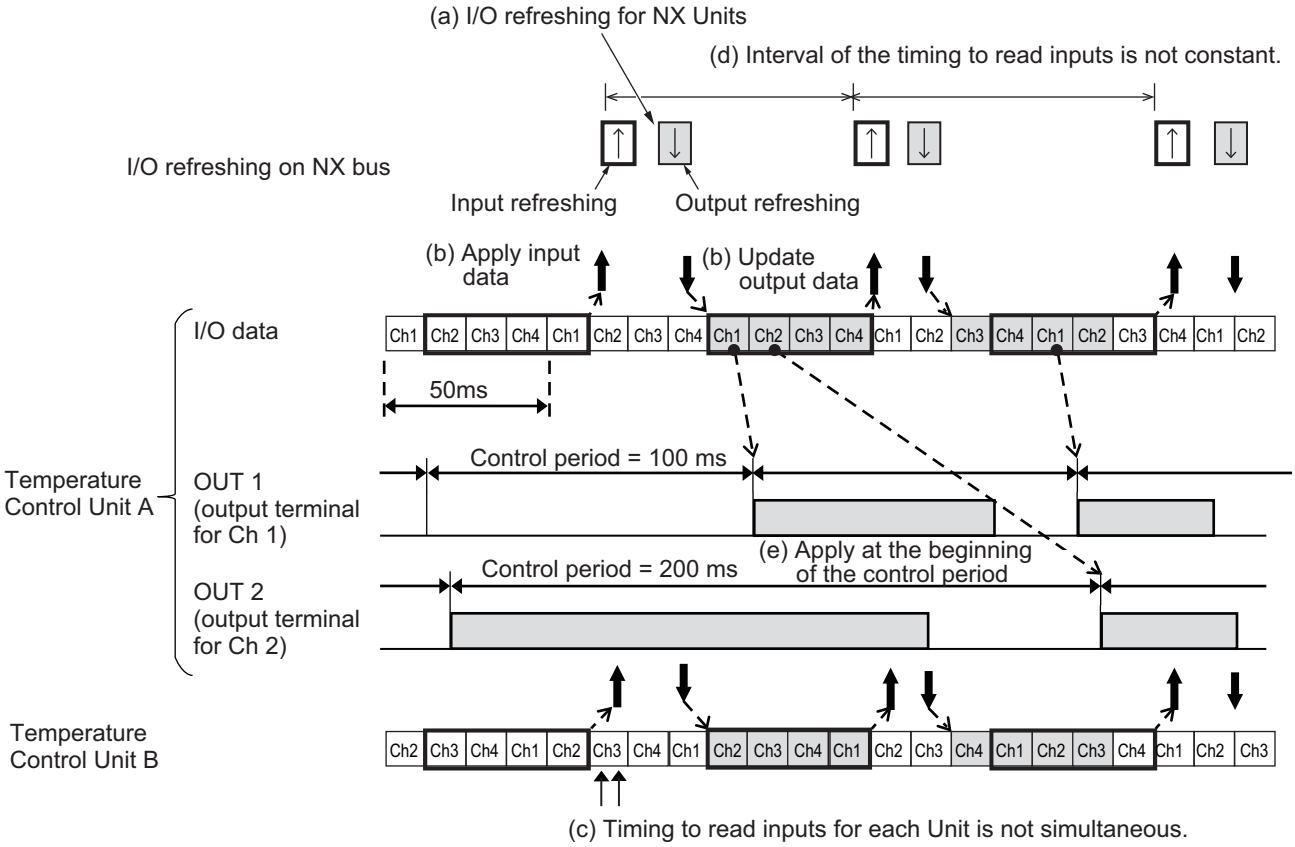

Settings

Add the NX Units that support Free-Run refreshing to the CPU Unit configuration or Slave Terminal configuration.

After you add the Units, set the I/O refreshing method for operation with Free-Run refreshing according to the connected CPU Unit or Communications Coupler Unit.

Refer to *5-2-2 Setting the I/O Refreshing Methods* on page 5-5 for the setting method for the I/O refreshing method.

6

I/O Data Specifications and Lists of Settings

This section describes the I/O data specifications for Temperature Control Units and lists of settings.

6-1 Specifications of I/O Data 6-2

6-1-1 Allocatable I/O Data 6-2

6-1-2 Details about Aggregated Data 6-16

6-1-3 Registering the Default Values for I/O Data 6-21

6-1-4 Method of Accessing the I/O Data for Adjustment 6-31

6-2 List of Settings 6-33

6-1 Specifications of I/O Data

This section describes the I/O data for Temperature Control Units.

Version Information

In a Temperature Control Unit with unit version 1.1 or later, functions are assigned to the "Reserved data" of unit version 1.0. For details on the assigned functions, refer to *Input Data Set 1* on page 6-4 and *Output Data Set 1* on page 6-10.

6-1-1 Allocatable I/O Data

This section describes the allocatable I/O data for the Temperature Input Units.

One I/O entry mapping for input and one for output are assigned in the I/O allocation settings for the Temperature Control Unit.

A specific I/O entry is assigned to the I/O entry mapping for each Temperature Control Unit model.

The I/O entries used for I/O data are described in this section. An I/O entry mapping means a collection of I/O entries.

The allocation of I/O entry mappings for the Temperature Control Unit is fixed. I/O entries can be added or deleted.

For details on how to add or delete I/O entries in the I/O entry mapping, refer to the operation manual for the Support Software that you are using.

The I/O entry mappings in the Temperature Control Unit are shown in the table below. The data for operation is assigned in the I/O entries of the Temperature Control Unit, and also the data for adjustment is assigned in those of Temperature Control Unit with unit version 1.1 or later.

I/O	I/O entry mapping name	I/O entries				
		Type of data		Editing	Maximum entries	Maximum size [bytes]
Inputs	Input Data Set 1	• Unit Status • Output and Alarm Status • Decimal Point Position Monitor • MV Monitor • Leakage current • Integral Time Monitor • Proportional Band (Cooling) Monitor • Derivative Time (Cooling) Monitor • SP Response Integral Time Monitor • SP Response Coefficient Number Monitor • Disturbance Integral Time Monitor • Input Digital Filter Monitor	• Operating Status • Ambient Temperature • Measured value • Heater current • Proportional Band Monitor • Derivative Time Monitor • Integral Time (Cooling) Monitor • SP Response Proportional Band Monitor • SP Response Derivative Time Monitor • Disturbance Proportional Band Monitor • Disturbance Derivative Time Monitor • Response flag	Possible.	62	148
Outputs	Output Data Set 1	• Operation Command • Manual MV • Integral Time • Proportional Band (Cooling) • Derivative Time (Cooling) • SP Response Integral Time • SP Response Coefficient Number • Disturbance Integral Time • Alarm Value 1 • Alarm Value Lower Limit 1 • Alarm Value Upper Limit 2 • Heater Burnout Detection Current • PV Input Shift • Hysteresis (Heating)	• Set point • Proportional Band • Derivative Time • Integral Time (Cooling) • SP Response Proportional Band • SP Response Derivative Time • Disturbance Proportional Band • Disturbance Derivative Time • Alarm Value Upper Limit 1 • Alarm Value 2 • Alarm Value Lower Limit 2 • SSR Failure Detection Current • Input Digital Filter • Hysteresis (Cooling)	Possible.	64	192

Details of the I/O entry for each I/O entry mapping are described below.

To assign the I/O allocation information of the NX Unit or Slave Terminal to an NJ/NX-series CPU Unit or NY-series Industrial PC, use the I/O ports for the allocated I/O data.

However, with a Slave Terminal, an I/O port is not used for some communications masters or Communications Coupler Units.

Refer to the user's manual for the connected Communications Coupler Unit for the I/O data application procedures for the Slave Terminal.

Additional Information

To access data to which I/O is not allocated, use instructions or other messages to access the NX objects.

The method to access NX objects through instructions or other messages depends on where the NX Unit is connected.

- If the NX Unit is connected to a CPU Unit, access is possible with the Read NX Unit Object instruction and the Write NX Unit Object instruction of the NJ/NX-series Controller.
- When the NX Unit is connected to a Communications Coupler Unit, the method depends on the connected Communications Coupler Unit or communications master.

Refer to the user's manual for the connected Communications Coupler Unit for method to use messages to access NX objects on Slave Terminals. For the index numbers and subindex numbers of NX objects, refer to *A-3 List of NX Objects* on page A-37.

Input Data Set 1

The I/O data that can be assigned to Input Data Set 1 is shown below. Refer to *6-1-3 Registering the Default Values for I/O Data* on page 6-21 for details on I/O data registered by default. Refer to *6-1-2 Details about Aggregated Data* on page 6-16 for more details about aggregated data, such as statuses.

Note that if you are using a Temperature Control Unit with unit version 1.0, the index numbers 600F to 601D hex will have “Reserved” data. Since the data is reserved, its description is omitted.

Precautions for Correct Use

A Temperature Control Unit with unit version 1.0 contains reserved data. Do not access the reserved data. If a user program that accesses the reserved data is used in a Temperature Control Unit with unit version 1.1 or later, it may result in erroneous operation.

Data name	Description	Data types	Default value	I/O port name	Index [Hex]	Subindex [Hex]	remarks
Unit Status	Aggregated data for Unit status.*1	WORD	0000 hex	Unit Status	6000 hex	01 hex	---
Ch1 Operating Status	Aggregated data for Ch1 operating status.*1	WORD	0000 hex	Ch1 Operating Status	6001 hex	01 hex	
Ch2 Operating Status	Aggregated data for Ch2 operating status.*1	WORD	0000 hex	Ch2 Operating Status		02 hex	
Ch3 Operating Status	Aggregated data for Ch3 operating status.*1	WORD	0000 hex	Ch3 Operating Status		03 hex	
Ch4 Operating Status	Aggregated data for Ch4 operating status.*1	WORD	0000 hex	Ch4 Operating Status		04 hex	
Ch1 Output and Alarm Status	Aggregated data for Ch1 output/alarm status.*1	WORD	0000 hex	Ch1 Output and Alarm Status	6002 hex	01 hex	
Ch2 Output and Alarm Status	Aggregated data for Ch2 output/alarm status.*1	WORD	0000 hex	Ch2 Output and Alarm Status		02 hex	
Ch3 Output and Alarm Status	Aggregated data for Ch3 output/alarm status.*1	WORD	0000 hex	Ch3 Output and Alarm Status		03 hex	
Ch4 Output and Alarm Status	Aggregated data for Ch4 output/alarm status.*1	WORD	0000 hex	Ch4 Output and Alarm Status		04 hex	
Ambient Temperature	Temperature around the terminals of the Temperature Control Unit. The temperature unit follows the "Ch1 Temperature Unit" setting, regardless of the "Ch1 Enable/Disable" setting.	INT	0	Ambient Temperature	6003 hex	01 hex	

Data name	Description	Data types	Default value	I/O port name	Index [Hex]	Subindex [Hex]	remarks
Ch1 Decimal Point Position Monitor	Decimal point position for Ch1. This data indicates the decimal point position of the measured value (INT type) and set point (INT type) for Ch1. 0: No decimal point 1: 1 decimal place	UINT	0	Ch1 Decimal Point Position Monitor	6004 hex	01 hex	
Ch2 Decimal Point Position Monitor	Decimal point position for Ch2. This data indicates the decimal point position of the measured value (INT type) and set point (INT type) for Ch2. 0: No decimal point 1: 1 decimal place	UINT	0	Ch2 Decimal Point Position Monitor		02 hex	
Ch3 Decimal Point Position Monitor	Decimal point position for Ch3. This data indicates the decimal point position of the measured value (INT type) and set point (INT type) for Ch3. 0: No decimal point 1: 1 decimal place	UINT	0	Ch3 Decimal Point Position Monitor		03 hex	
Ch4 Decimal Point Position Monitor	Decimal point position for Ch4. This data indicates the decimal point position of the measured value (INT type) and set point (INT type) for Ch4. 0: No decimal point 1: 1 decimal place	UINT	0	Ch4 Decimal Point Position Monitor		04 hex	
Ch1 Measured Value INT	The INT measured value for Ch1. The units are 0.1°C or °C or 0.1°F or °F.	INT	0	Ch1 Measured Value INT	6005 hex	01 hex	---
Ch2 Measured Value INT	The INT measured value for Ch2. The units are 0.1°C or °C or 0.1°F or °F.	INT	0	Ch2 Measured Value INT		02 hex	
Ch3 Measured Value INT	The INT measured value for Ch3. The units are 0.1°C or °C or 0.1°F or °F.	INT	0	Ch3 Measured Value INT		03 hex	
Ch4 Measured Value INT	The INT measured value for Ch4. The units are 0.1°C or °C or 0.1°F or °F.	INT	0	Ch4 Measured Value INT		04 hex	
Ch1 Measured Value REAL	The REAL measured value for Ch1. The units are °C or °F.	REAL	0	Ch1 Measured Value REAL	6006 hex	01 hex	
Ch2 Measured Value REAL	The REAL measured value for Ch2. The units are °C or °F.	REAL	0	Ch2 Measured Value REAL		02 hex	
Ch3 Measured Value REAL	The REAL measured value for Ch3. The units are °C or °F.	REAL	0	Ch3 Measured Value REAL		03 hex	
Ch4 Measured Value REAL	The REAL measured value for Ch4. The units are °C or °F.	REAL	0	Ch4 Measured Value REAL		04 hex	
Ch1 MV Monitor Heating INT	INT-type manipulated variable (heating) for Ch1. The unit is 0.1%.	INT	0	Ch1 MV Monitor Heating INT	6007 hex	01 hex	
Ch2 MV Monitor Heating INT	INT-type manipulated variable (heating) for Ch2. The unit is 0.1%.	INT	0	Ch2 MV Monitor Heating INT		02 hex	
Ch3 MV Monitor Heating INT	INT-type manipulated variable (heating) for Ch3. The unit is 0.1%.	INT	0	Ch3 MV Monitor Heating INT		03 hex	
Ch4 MV Monitor Heating INT	INT-type manipulated variable (heating) for Ch4. The unit is 0.1%.	INT	0	Ch4 MV Monitor Heating INT		04 hex	

Data name	Description	Data types	Default value	I/O port name	Index [Hex]	Subindex [Hex]	remarks
Ch1 MV Monitor Heating REAL	REAL-type manipulated variable (heating) for Ch1. The unit is %.	REAL	0	Ch1 MV Monitor Heating REAL	6008 hex	01 hex	
Ch2 MV Monitor Heating REAL	REAL-type manipulated variable (heating) for Ch2. The unit is %.	REAL	0	Ch2 MV Monitor Heating REAL		02 hex	
Ch3 MV Monitor Heating REAL	REAL-type manipulated variable (heating) for Ch3. The unit is %.	REAL	0	Ch3 MV Monitor Heating REAL		03 hex	
Ch4 MV Monitor Heating REAL	REAL-type manipulated variable (heating) for Ch4. The unit is %.	REAL	0	Ch4 MV Monitor Heating REAL		04 hex	
Ch1 MV Monitor Cooling INT	INT-type manipulated variable (cooling) for Ch1. The unit is 0.1%.	INT	0	Ch1 MV Monitor Cooling INT	6009 hex	01 hex	
Ch2 MV Monitor Cooling INT	INT-type manipulated variable (cooling) for Ch2. The unit is 0.1%.	INT	0	Ch2 MV Monitor Cooling INT		02 hex	
Ch3 MV Monitor Cooling INT	INT-type manipulated variable (cooling) for Ch3. The unit is 0.1%.	INT	0	Ch3 MV Monitor Cooling INT		03 hex	
Ch4 MV Monitor Cooling INT	INT-type manipulated variable (cooling) for Ch4. The unit is 0.1%.	INT	0	Ch4 MV Monitor Cooling INT		04 hex	
Ch1 MV Monitor Cooling REAL	REAL-type manipulated variable (cooling) for Ch1. The unit is %.	REAL	0	Ch1 MV Monitor Cooling REAL	600A hex	01 hex	
Ch2 MV Monitor Cooling REAL	REAL-type manipulated variable (cooling) for Ch2. The unit is %.	REAL	0	Ch2 MV Monitor Cooling REAL		02 hex	
Ch3 MV Monitor Cooling REAL	REAL-type manipulated variable (cooling) for Ch3. The unit is %.	REAL	0	Ch3 MV Monitor Cooling REAL		03 hex	---
Ch4 MV Monitor Cooling REAL	REAL-type manipulated variable (cooling) for Ch4. The unit is %.	REAL	0	Ch4 MV Monitor Cooling REAL		04 hex	
Ch1 Heater Current UINT	UINT-type heater current for Ch1. The unit is 0.1 A.	UINT	0	Ch1 Heater Current UINT	600B hex	01 hex	
Ch2 Heater Current UINT	UINT-type heater current for Ch2. The unit is 0.1 A.	UINT	0	Ch2 Heater Current UINT		02 hex	
Ch3 Heater Current UINT	UINT-type heater current for Ch3. The unit is 0.1 A.	UINT	0	Ch3 Heater Current UINT		03 hex	
Ch4 Heater Current UINT	UINT-type heater current for Ch4. The unit is 0.1 A.	UINT	0	Ch4 Heater Current UINT		04 hex	
Ch1 Heater Current REAL	REAL-type heater current for Ch1. The unit is amperes.	REAL	0	Ch1 Heater Current REAL	600C hex	01 hex	
Ch2 Heater Current REAL	REAL-type heater current for Ch2. The unit is amperes.	REAL	0	Ch2 Heater Current REAL		02 hex	
Ch3 Heater Current REAL	REAL-type heater current for Ch3. The unit is amperes.	REAL	0	Ch3 Heater Current REAL		03 hex	
Ch4 Heater Current REAL	REAL-type heater current for Ch4. The unit is amperes.	REAL	0	Ch4 Heater Current REAL		04 hex	
Ch1 Leakage Current UINT	UINT-type leakage current value for Ch1. The unit is 0.1 A.	UINT	0	Ch1 Leakage Current UINT	600D hex	01 hex	
Ch2 Leakage Current UINT	UINT-type leakage current value for Ch2. The unit is 0.1 A.	UINT	0	Ch2 Leakage Current UINT		02 hex	
Ch3 Leakage Current UINT	UINT-type leakage current value for Ch3. The unit is 0.1 A.	UINT	0	Ch3 Leakage Current UINT		03 hex	
Ch4 Leakage Current UINT	UINT-type leakage current value for Ch4. The unit is 0.1 A.	UINT	0	Ch4 Leakage Current UINT		04 hex	

Data name	Description	Data types	Default value	I/O port name	Index [Hex]	Subindex [Hex]	remarks
Ch1 Leakage Current REAL	REAL-type leakage current value for Ch1. The unit is amperes.	REAL	0	Ch1 Leakage Current REAL	600E hex	01 hex	---
Ch2 Leakage Current REAL	REAL-type leakage current value for Ch2. The unit is amperes.	REAL	0	Ch2 Leakage Current REAL		02 hex	
Ch3 Leakage Current REAL	REAL-type leakage current value for Ch3. The unit is amperes.	REAL	0	Ch3 Leakage Current REAL		03 hex	
Ch4 Leakage Current REAL	REAL-type leakage current value for Ch4. The unit is amperes.	REAL	0	Ch4 Leakage Current REAL		04 hex	
Ch1 Proportional Band Monitor	Proportional band for Ch1. The unit is 0.1°C or 0.1°F.	UNIT	80	Ch1 Proportional Band Monitor	600F hex	01 hex	• Data for adjustment. • Reserved data in unit version 1.0.
Ch2 Proportional Band Monitor	Proportional band for Ch2. The unit is 0.1°C or 0.1°F.	UNIT	80	Ch2 Proportional Band Monitor		02 hex	
Ch3 Proportional Band Monitor	Proportional band for Ch3. The unit is 0.1°C or 0.1°F.	UNIT	80	Ch3 Proportional Band Monitor		03 hex	
Ch4 Proportional Band Monitor	Proportional band for Ch4. The unit is 0.1°C or 0.1°F.	UNIT	80	Ch4 Proportional Band Monitor		04 hex	
Ch1 Integral Time Monitor	Integral time for Ch1. The unit is 0.1 s.	UNIT	2330	Ch1 Integral Time Monitor	6010 hex	01 hex	
Ch2 Integral Time Monitor	Integral time for Ch2. The unit is 0.1 s.	UNIT	2330	Ch2 Integral Time Monitor		02 hex	
Ch3 Integral Time Monitor	Integral time for Ch3. The unit is 0.1 s.	UNIT	2330	Ch3 Integral Time Monitor		03 hex	
Ch4 Integral Time Monitor	Integral time for Ch4. The unit is 0.1 s.	UNIT	2330	Ch4 Integral Time Monitor		04 hex	
Ch1 Derivative Time Monitor	Derivative time for Ch1. The unit is 0.1 s.	UNIT	400	Ch1 Derivative Time Monitor	6011 hex	01 hex	
Ch2 Derivative Time Monitor	Derivative time for Ch2. The unit is 0.1 s.	UNIT	400	Ch2 Derivative Time Monitor		02 hex	
Ch3 Derivative Time Monitor	Derivative time for Ch3. The unit is 0.1 s.	UNIT	400	Ch3 Derivative Time Monitor		03 hex	
Ch4 Derivative Time Monitor	Derivative time for Ch4. The unit is 0.1 s.	UNIT	400	Ch4 Derivative Time Monitor		04 hex	
Ch1 Proportional Band (Cooling) Monitor	Proportional band (cooling) for Ch1. The unit is 0.1°C or 0.1°F.	UNIT	80	Ch1 Proportional Band (Cooling) Monitor	6012 hex	01 hex	
Ch2 Proportional Band (Cooling) Monitor	Proportional band (cooling) for Ch2. The unit is 0.1°C or 0.1°F.	UNIT	80	Ch2 Proportional Band (Cooling) Monitor		02 hex	
Ch3 Proportional Band (Cooling) Monitor	Proportional band (cooling) for Ch3. The unit is 0.1°C or 0.1°F.	UNIT	80	Ch3 Proportional Band (Cooling) Monitor		03 hex	
Ch4 Proportional Band (Cooling) Monitor	Proportional band (cooling) for Ch4. The unit is 0.1°C or 0.1°F.	UNIT	80	Ch4 Proportional Band (Cooling) Monitor		04 hex	
Ch1 Integral Time (Cooling) Monitor	Integral time (cooling) for Ch1. The unit is 0.1 s.	UNIT	2330	Ch1 Integral Time (Cooling) Monitor	6013 hex	01 hex	
Ch2 Integral Time (Cooling) Monitor	Integral time (cooling) for Ch2. The unit is 0.1 s.	UNIT	2330	Ch2 Integral Time (Cooling) Monitor		02 hex	
Ch3 Integral Time (Cooling) Monitor	Integral time (cooling) for Ch3. The unit is 0.1 s.	UNIT	2330	Ch3 Integral Time (Cooling) Monitor		03 hex	
Ch4 Integral Time (Cooling) Monitor	Integral time (cooling) for Ch4. The unit is 0.1 s.	UNIT	2330	Ch4 Integral Time (Cooling) Monitor		04 hex	

Data name	Description	Data types	Default value	I/O port name	Index [Hex]	Subindex [Hex]	remarks
Ch1 Derivative Time (Cooling) Monitor	Derivative time (cooling) for Ch1. The unit is 0.1 s.	UNIT	400	Ch1 Derivative Time (Cooling) Monitor	6014 hex	01 hex	• Data for adjustment. • Reserved data in unit version 1.0.
Ch2 Derivative Time (Cooling) Monitor	Derivative time (cooling) for Ch2. The unit is 0.1 s.	UNIT	400	Ch2 Derivative Time (Cooling) Monitor		02 hex	
Ch3 Derivative Time (Cooling) Monitor	Derivative time (cooling) for Ch3. The unit is 0.1 s.	UNIT	400	Ch3 Derivative Time (Cooling) Monitor		03 hex	
Ch4 Derivative Time (Cooling) Monitor	Derivative time (cooling) for Ch4. The unit is 0.1 s.	UNIT	400	Ch4 Derivative Time (Cooling) Monitor		04 hex	
Ch1 SP Response Proportional Band Monitor	SP response proportional band for Ch1. The unit is 0.1°C or 0.1°F.	UNIT	80	Ch1 SP Response Proportional Band Monitor	6015 hex	01 hex	
Ch2 SP Response Proportional Band Monitor	SP response proportional band for Ch2. The unit is 0.1°C or 0.1°F.	UNIT	80	Ch2 SP Response Proportional Band Monitor		02 hex	
Ch3 SP Response Proportional Band Monitor	SP response proportional band for Ch3. The unit is 0.1°C or 0.1°F.	UNIT	80	Ch3 SP Response Proportional Band Monitor		03 hex	
Ch4 SP Response Proportional Band Monitor	SP response proportional band for Ch4. The unit is 0.1°C or 0.1°F.	UNIT	80	Ch4 SP Response Proportional Band Monitor		04 hex	
Ch1 SP Response Integral Time Monitor	SP response integral time for Ch1. The unit is 0.1 s.	UNIT	2330	Ch1 SP Response Integral Time Monitor	6016 hex	01 hex	
Ch2 SP Response Integral Time Monitor	SP response integral time for Ch2. The unit is 0.1 s.	UNIT	2330	Ch2 SP Response Integral Time Monitor		02 hex	
Ch3 SP Response Integral Time Monitor	SP response integral time for Ch3. The unit is 0.1 s.	UNIT	2330	Ch3 SP Response Integral Time Monitor		03 hex	
Ch4 SP Response Integral Time Monitor	SP response integral time for Ch4. The unit is 0.1 s.	UNIT	2330	Ch4 SP Response Integral Time Monitor		04 hex	
Ch1 SP Response Derivative Time Monitor	SP response derivative time for Ch1. The unit is 0.1 s.	UNIT	400	Ch1 SP Response Derivative Time Monitor	6017 hex	01 hex	
Ch2 SP Response Derivative Time Monitor	SP response derivative time for Ch2. The unit is 0.1 s.	UNIT	400	Ch2 SP Response Derivative Time Monitor		02 hex	
Ch3 SP Response Derivative Time Monitor	SP response derivative time for Ch3. The unit is 0.1 s.	UNIT	400	Ch3 SP Response Derivative Time Monitor		03 hex	
Ch4 SP Response Derivative Time Monitor	SP response derivative time for Ch4. The unit is 0.1 s.	UNIT	400	Ch4 SP Response Derivative Time Monitor		04 hex	
Ch1 SP Response Coefficient Number Monitor	SP response coefficient number for Ch1.	UNIT	0	Ch1 SP Response Coefficient Number Monitor	6018 hex	01 hex	
Ch2 SP Response Coefficient Number Monitor	SP response coefficient number for Ch2.	UNIT	0	Ch2 SP Response Coefficient Number Monitor		02 hex	
Ch3 SP Response Coefficient Number Monitor	SP response coefficient number for Ch3.	UNIT	0	Ch3 SP Response Coefficient Number Monitor		03 hex	
Ch4 SP Response Coefficient Number Monitor	SP response coefficient number for Ch4.	UNIT	0	Ch4 SP Response Coefficient Number Monitor		04 hex	

Data name	Description	Data types	Default value	I/O port name	Index [Hex]	Subindex [Hex]	remarks
Ch1 Disturbance Proportional Band Monitor	Disturbance proportional band for Ch1. The unit is 0.1°C or 0.1°F.	UNIT	80	Ch1 Disturbance Proportional Band Monitor	6019 hex	01 hex	• Data for adjustment. • Reserved data in unit version 1.0.
Ch2 Disturbance Proportional Band Monitor	Disturbance proportional band for Ch2. The unit is 0.1°C or 0.1°F.	UNIT	80	Ch2 Disturbance Proportional Band Monitor		02 hex	
Ch3 Disturbance Proportional Band Monitor	Disturbance proportional band for Ch3. The unit is 0.1°C or 0.1°F.	UNIT	80	Ch3 Disturbance Proportional Band Monitor		03 hex	
Ch4 Disturbance Proportional Band Monitor	Disturbance proportional band for Ch4. The unit is 0.1°C or 0.1°F.	UNIT	80	Ch4 Disturbance Proportional Band Monitor		04 hex	
Ch1 Disturbance Integral Time Monitor	Disturbance integral time for Ch1. The unit is 0.1 s.	UNIT	2330	Ch1 Disturbance Integral Time Monitor	601A hex	01 hex	
Ch2 Disturbance Integral Time Monitor	Disturbance integral time for Ch2. The unit is 0.1 s.	UNIT	2330	Ch2 Disturbance Integral Time Monitor		02 hex	
Ch3 Disturbance Integral Time Monitor	Disturbance integral time for Ch3. The unit is 0.1 s.	UNIT	2330	Ch3 Disturbance Integral Time Monitor		03 hex	
Ch4 Disturbance Integral Time Monitor	Disturbance integral time for Ch4. The unit is 0.1 s.	UNIT	2330	Ch4 Disturbance Integral Time Monitor		04 hex	
Ch1 Disturbance Derivative Time Monitor	Disturbance derivative time for Ch. The unit is 0.1 s.	UNIT	400	Ch1 Disturbance Derivative Time Monitor	601B hex	01 hex	
Ch2 Disturbance Derivative Time Monitor	Disturbance derivative time for Ch2. The unit is 0.1 s.	UNIT	400	Ch2 Disturbance Derivative Time Monitor		02 hex	
Ch3 Disturbance Derivative Time Monitor	Disturbance derivative time for Ch3. The unit is 0.1 s.	UNIT	400	Ch3 Disturbance Derivative Time Monitor		03 hex	
Ch4 Disturbance Derivative Time Monitor	Disturbance derivative time for Ch4. The unit is 0.1 s.	UNIT	400	Ch4 Disturbance Derivative Time Monitor		04 hex	
Ch1 Input Digital Filter Monitor	Input digital filter for Ch1. The unit is 0.1 s.	UNIT	0	Ch1 Input Digital Filter Monitor	601C hex	01 hex	
Ch2 Input Digital Filter Monitor	Input digital filter for Ch2. The unit is 0.1 s.	UNIT	0	Ch2 Input Digital Filter Monitor		02 hex	
Ch3 Input Digital Filter Monitor	Input digital filter for Ch3. The unit is 0.1 s.	UNIT	0	Ch3 Input Digital Filter Monitor		03 hex	
Ch4 Input Digital Filter Monitor	Input digital filter for Ch4. The unit is 0.1 s.	UNIT	0	Ch4 Input Digital Filter Monitor		04 hex	
Response flag	The reflection result when the “Reflect Data for Adjustment” of “Ch□ Operation Command” is executed. When writing is normal. • 0000 hex: Not reflected • 0001 hex: Reflected When writing is abnormal. • High-order byte: Low-order byte of the index number of the I/O data for adjustment in which an error has occurred. • Low-order byte: Sub-index number of the I/O data for adjustment in which an error has occurred.	WORD	0000 hex	Response flag	601D hex	01 hex	

*1. For the detailed data, refer to *6-1-2 Details about Aggregated Data* on page 6-16.

Output Data Set 1

The I/O data that can be assigned to Output Data Set 1 is shown below. Refer to *6-1-3 Registering the Default Values for I/O Data* on page 6-21 for details on I/O data registered by default. Refer to *6-1-2 Details about Aggregated Data* on page 6-16 for details about aggregated data, such as operation commands.

Note that if you are using a Temperature Control Unit with unit version 1.0, the index numbers 7005 to 701D hex will have “Reserved” data. Since the data is reserved, its description is omitted.

Precautions for Correct Use

- A Temperature Control Unit with unit version 1.0 contains reserved data. Do not access the reserved data. If a user program that accesses the reserved data is used in a Temperature Control Unit with unit version 1.1 or later, it may result in erroneous operation.
- If you change the operation mode of the NJ/NX-series Controller and the CS/CJ/CP-series CPU Unit, the values of the I/O data will not be retained in the factory default settings of the CPU Unit. In such a case, the output data such as the “Ch□ Operation Command” and “Ch□ Set Point” in the Temperature Control Unit will become 0, because the Temperature Control Unit may perform unexpected operations. Follow the methods described below to ensure that the I/O data is retained even when the operation mode is changed.

  a) In the case of the NJ/NX-series Controller, set the system-defined variable “_Device-OutHoldCfg (Device output hold setting)”. For details, refer to NJ/ NX-series CPU Unit Software User’s Manual (Cat. No. W501).

  b) In the case of the CS/CJ/CP-series PLC, set the “I/O memory hold flag”. For details, refer to the user’s manual of the connected CPU Unit.

  According to the above method, the entire I/O data including the other NX Units is retained. If there is some data that you do not want to retain, remove the assignment of the data that you want to retain from the output data, and create a user program to be accessed through message communication.

Data name	Description	Data types	Default value	I/O port name	Index [Hex]	Subindex [Hex]	remarks
Ch1 Operation Command	Aggregated data for Ch1 Operation Command.*1	WORD	0000 hex	Ch1 Operation Command	7000 hex	01 hex	---
Ch2 Operation Command	Aggregated data for Ch2 Operation Command.*1	WORD	0000 hex	Ch2 Operation Command		02 hex	
Ch3 Operation Command	Aggregated data for Ch3 Operation Command.*1	WORD	0000 hex	Ch3 Operation Command		03 hex	
Ch4 Operation Command	Aggregated data for Ch4 Operation Command.*1	WORD	0000 hex	Ch4 Operation Command		04 hex	
Ch1 Set Point INT*2 *3	INT-type set point for Ch1. The units are 0.1°C or °C or 0.1°F or °F.	INT	0	Ch1 Set Point INT	7001 hex	01 hex	
Ch2 Set Point INT*2 *3	INT-type set point for Ch2. The units are 0.1°C or °C or 0.1°F or °F.	INT	0	Ch2 Set Point INT		02 hex	
Ch3 Set Point INT*2 *3	INT-type set point for Ch3. The units are 0.1°C or °C or 0.1°F or °F.	INT	0	Ch3 Set Point INT		03 hex	
Ch4 Set Point INT*2 *3	INT-type set point for Ch4. The units are 0.1°C or °C or 0.1°F or °F.	INT	0	Ch4 Set Point INT		04 hex	

Data name	Description	Data types	Default value	I/O port name	Index [Hex]	Subindex [Hex]	remarks
Ch1 Set Point REAL*2 *4	REAL-type set point for Ch1. The units are °C or °F.	REAL	0	Ch1 Set Point REAL	7002 hex	01 hex	---
Ch2 Set Point REAL*2 *4	REAL-type set point for Ch2. The units are °C or °F.	REAL	0	Ch2 Set Point REAL		02 hex	
Ch3 Set Point REAL*2 *4	REAL-type set point for Ch3. The units are °C or °F.	REAL	0	Ch3 Set Point REAL		03 hex	
Ch4 Set Point REAL*2 *4	REAL-type set point for Ch4. The units are °C or °F.	REAL	0	Ch4 Set Point REAL		04 hex	
Ch1 Manual MV INT*5 *6	INT-type manual manipulated variable for Ch1. The unit is 0.1%.	INT	0	Ch1 Manual MV INT	7003 hex	01 hex	
Ch2 Manual MV INT*5 *6	INT-type manual manipulated variable for Ch2. The unit is 0.1%.	INT	0	Ch2 Manual MV INT		02 hex	
Ch3 Manual MV INT*5 *6	INT-type manual manipulated variable for Ch3. The unit is 0.1%.	INT	0	Ch3 Manual MV INT		03 hex	
Ch4 Manual MV INT*5 *6	INT-type manual manipulated variable for Ch4. The unit is 0.1%.	INT	0	Ch4 Manual MV INT		04 hex	
Ch1 Manual MV REAL*5 *7	REAL-type manual manipulated variable for Ch1. The unit is %.	REAL	0	Ch1 Manual MV REAL	7004 hex	01 hex	
Ch2 Manual MV REAL*5 *7	REAL-type manual manipulated variable for Ch2. The unit is %.	REAL	0	Ch2 Manual MV REAL		02 hex	
Ch3 Manual MV REAL*5 *7	REAL-type manual manipulated variable for Ch3. The unit is %.	REAL	0	Ch3 Manual MV REAL		03 hex	
Ch4 Manual MV REAL*5 *7	REAL-type manual manipulated variable for Ch4. The unit is %.	REAL	0	Ch4 Manual MV REAL		04 hex	
Ch1 Proportional Band	Proportional band for Ch1. The unit is 0.1°C or 0.1°F.	UNIT	80	Ch1 Proportional Band	7005	01 hex	• Data for adjustment. • Reserved data in unit version 1.0.
Ch2 Proportional Band	Proportional band for Ch2. The unit is 0.1°C or 0.1°F.	UNIT	80	Ch2 Proportional Band		02 hex	
Ch3 Proportional Band	Proportional band for Ch3. The unit is 0.1°C or 0.1°F.	UNIT	80	Ch3 Proportional Band		03 hex	
Ch4 Proportional Band	Proportional band for Ch4. The unit is 0.1°C or 0.1°F.	UNIT	80	Ch4 Proportional Band		04 hex	
Ch1 Integral Time	Integral time for Ch1. The unit is 0.1 s.	UNIT	2330	Ch1 Integral Time	7006	01 hex	
Ch2 Integral Time	Integral time for Ch2. The unit is 0.1 s.	UNIT	2330	Ch2 Integral Time		02 hex	
Ch3 Integral Time	Integral time for Ch3. The unit is 0.1 s.	UNIT	2330	Ch2 Integral Time		03 hex	
Ch4 Integral Time	Integral time for Ch4. The unit is 0.1 s.	UNIT	2330	Ch2 Integral Time		04 hex	
Ch1 Derivative Time	Derivative time for Ch1. The unit is 0.1 s.	UNIT	400	Ch1 Derivative Time	7007	01 hex	
Ch2 Derivative Time	Derivative time for Ch2. The unit is 0.1 s.	UNIT	400	Ch2 Derivative Time		02 hex	
Ch3 Derivative Time	Derivative time for Ch3. The unit is 0.1 s.	UNIT	400	Ch3 Derivative Time		03 hex	
Ch4 Derivative Time	Derivative time for Ch4. The unit is 0.1 s.	UNIT	400	Ch4 Derivative Time		04 hex	

Data name	Description	Data types	Default value	I/O port name	Index [Hex]	Subindex [Hex]	remarks
Ch1 Proportional Band (Cooling)	Proportional band (cooling) for Ch1. The unit is 0.1°C or 0.1°F.	UNIT	80	Ch1 Proportional Band (Cooling)	7008	01 hex	• Data for adjustment. • Reserved data in unit version 1.0.
Ch2 Proportional Band (Cooling)	Proportional band (cooling) for Ch2. The unit is 0.1°C or 0.1°F.	UNIT	80	Ch2 Proportional Band (Cooling)		02 hex	
Ch3 Proportional Band (Cooling)	Proportional band (cooling) for Ch3. The unit is 0.1°C or 0.1°F.	UNIT	80	Ch3 Proportional Band (Cooling)		03 hex	
Ch4 Proportional Band (Cooling)	Proportional band (cooling) for Ch4. The unit is 0.1°C or 0.1°F.	UNIT	80	Ch4 Proportional Band (Cooling)		04 hex	
Ch1 Integral Time (Cooling)	Integral time (cooling) for Ch1. The unit is 0.1 s.	UNIT	2330	Ch1 Integral Time (Cooling)	7009	01 hex	
Ch2 Integral Time (Cooling)	Integral time (cooling) for Ch2. The unit is 0.1 s.	UNIT	2330	Ch2 Integral Time (Cooling)		02 hex	
Ch3 Integral Time (Cooling)	Integral time (cooling) for Ch3. The unit is 0.1 s.	UNIT	2330	Ch3 Integral Time (Cooling)		03 hex	
Ch4 Integral Time (Cooling)	Integral time (cooling) for Ch4. The unit is 0.1 s.	UNIT	2330	Ch4 Integral Time (Cooling)		04 hex	
Ch1 Derivative Time (Cooling)	Derivative time (cooling) for Ch1. The unit is 0.1 s.	UNIT	400	Ch1 Derivative Time (Cooling)	700A	01 hex	
Ch2 Derivative Time (Cooling)	Derivative time (cooling) for Ch2. The unit is 0.1 s.	UNIT	400	Ch2 Derivative Time (Cooling)		02 hex	
Ch3 Derivative Time (Cooling)	Derivative time (cooling) for Ch3. The unit is 0.1 s.	UNIT	400	Ch3 Derivative Time (Cooling)		03 hex	
Ch4 Derivative Time (Cooling)	Derivative time (cooling) for Ch4. The unit is 0.1 s.	UNIT	400	Ch4 Derivative Time (Cooling)		04 hex	
Ch1 SP Response Proportional Band	SP response proportional band for Ch1. The unit is 0.1°C or 0.1°F.	UNIT	80	Ch1 SP Response Proportional Band	700B	01 hex	
Ch2 SP Response Proportional Band	SP response proportional band for Ch2. The unit is 0.1°C or 0.1°F.	UNIT	80	Ch2 SP Response Proportional Band		02 hex	
Ch3 SP Response Proportional Band	SP response proportional band for Ch3. The unit is 0.1°C or 0.1°F.	UNIT	80	Ch3 SP Response Proportional Band		03 hex	
Ch4 SP Response Proportional Band	SP response proportional band for Ch4. The unit is 0.1°C or 0.1°F.	UNIT	80	Ch4 SP Response Proportional Band		04 hex	
Ch1 SP Response Integral Time	SP response integral time for Ch1. The unit is 0.1 s.	UNIT	2330	Ch1 SP Response Integral Time	700C	01 hex	
Ch2 SP Response Integral Time	SP response integral time for Ch2. The unit is 0.1 s.	UNIT	2330	Ch2 SP Response Integral Time		02 hex	
Ch3 SP Response Integral Time	SP response integral time for Ch3. The unit is 0.1 s.	UNIT	2330	Ch3 SP Response Integral Time		03 hex	
Ch4 SP Response Integral Time	SP response integral time for Ch4. The unit is 0.1 s.	UNIT	2330	Ch4 SP Response Integral Time		04 hex	
Ch1 SP Response Derivative Time	SP response derivative time for Ch1. The unit is 0.1 s.	UNIT	400	Ch1 SP Response Derivative Time	700D	01 hex	
Ch2 SP Response Derivative Time	SP response derivative time for Ch2. The unit is 0.1 s.	UNIT	400	Ch2 SP Response Derivative Time		02 hex	
Ch3 SP Response Derivative Time	SP response derivative time for Ch3. The unit is 0.1 s.	UNIT	400	Ch3 SP Response Derivative Time		03 hex	
Ch4 SP Response Derivative Time	SP response derivative time for Ch4. The unit is 0.1 s.	UNIT	400	Ch4 SP Response Derivative Time		04 hex	

Data name	Description	Data types	Default value	I/O port name	Index [Hex]	Subindex [Hex]	remarks
Ch1 SP Response Coefficient Number	SP response coefficient number for Ch1.	UNIT	0	Ch1 SP Response Coefficient Number	700E	01 hex	• Data for adjustment. • Reserved data in unit version 1.0.
Ch2 SP Response Coefficient Number	SP response coefficient number for Ch2.	UNIT	0	Ch2 SP Response Coefficient Number		02 hex	
Ch3 SP Response Coefficient Number	SP response coefficient number for Ch3.	UNIT	0	Ch3 SP Response Coefficient Number		03 hex	
Ch4 SP Response Coefficient Number	SP response coefficient number for Ch4.	UNIT	0	Ch4 SP Response Coefficient Number		04 hex	
Ch1 Disturbance Proportional Band	Disturbance proportional band for Ch1. The unit is 0.1°C or 0.1°F.	UNIT	80	Ch1 Disturbance Proportional Band	700F	01 hex	
Ch2 Disturbance Proportional Band	Disturbance proportional band for Ch2. The unit is 0.1°C or 0.1°F.	UNIT	80	Ch2 Disturbance Proportional Band		02 hex	
Ch3 Disturbance Proportional Band	Disturbance proportional band for Ch3. The unit is 0.1°C or 0.1°F.	UNIT	80	Ch3 Disturbance Proportional Band		03 hex	
Ch4 Disturbance Proportional Band	Disturbance proportional band for Ch4. The unit is 0.1°C or 0.1°F.	UNIT	80	Ch4 Disturbance Proportional Band		04 hex	
Ch1 Disturbance Integral Time	Disturbance integral time for Ch1. The unit is 0.1 s.	UNIT	2330	Ch1 Disturbance Integral Time	7010	01 hex	
Ch2 Disturbance Integral Time	Disturbance integral time for Ch2. The unit is 0.1 s.	UNIT	2330	Ch2 Disturbance Integral Time		02 hex	
Ch3 Disturbance Integral Time	Disturbance integral time for Ch3. The unit is 0.1 s.	UNIT	2330	Ch3 Disturbance Integral Time		03 hex	
Ch4 Disturbance Integral Time	Disturbance integral time for Ch4. The unit is 0.1 s.	UNIT	2330	Ch4 Disturbance Integral Time		04 hex	
Ch1 Disturbance Derivative Time	Disturbance derivative time for Ch1. The unit is 0.1 s.	UNIT	400	Ch1 Disturbance Derivative Time	7011	01 hex	
Ch2 Disturbance Derivative Time	Disturbance derivative time for Ch2. The unit is 0.1 s.	UNIT	400	Ch2 Disturbance Derivative Time		02 hex	
Ch3 Disturbance Derivative Time	Disturbance derivative time for Ch3. The unit is 0.1 s.	UNIT	400	Ch3 Disturbance Derivative Time		03 hex	
Ch4 Disturbance Derivative Time	Disturbance derivative time for Ch4. The unit is 0.1 s.	UNIT	400	Ch4 Disturbance Derivative Time		04 hex	
Ch1 Alarm Value 1*8	Alarm value 1 for Ch1. The unit is °C or °F. The unit is “s” when LBA (Loop burnout alarm) is used.	REAL	0	Ch1 Alarm Value 1*8	7012	01 hex	• Reserved data in unit version 1.0.
Ch2 Alarm Value 1*8	Alarm value 1 for Ch2. The unit is °C or °F. The unit is “s” when LBA (Loop burnout alarm) is used.	REAL	0	Ch2 Alarm Value 1*8		02 hex	
Ch3 Alarm Value 1*8	Alarm value 1 for Ch3. The unit is °C or °F. The unit is “s” when LBA (Loop burnout alarm) is used.	REAL	0	Ch3 Alarm Value 1*8		03 hex	
Ch4 Alarm Value 1*8	Alarm value 1 for Ch4. The unit is °C or °F. The unit is “s” when LBA (Loop burnout alarm) is used.	REAL	0	Ch4 Alarm Value 1*8		04 hex	
Ch1 Alarm Value Upper Limit 1 *8	Alarm value upper limit 1 for Ch1. The unit is °C or °F.	REAL	0	Ch1 Alarm Value Upper Limit 1	7013	01 hex	
Ch2 Alarm Value Upper Limit 1 *8	Alarm value upper limit 1 for Ch2. The unit is °C or °F.	REAL	0	Ch2 Alarm Value Upper Limit 1		02 hex	
Ch3 Alarm Value Upper Limit 1 *8	Alarm value upper limit 1 for Ch3. The unit is °C or °F.	REAL	0	Ch3 Alarm Value Upper Limit 1		03 hex	
Ch4 Alarm Value Upper Limit 1 *8	Alarm value upper limit 1 for Ch4. The unit is °C or °F.	REAL	0	Ch4 Alarm Value Upper Limit 1		04 hex	

Data name	Description	Data types	Default value	I/O port name	Index [Hex]	Subindex [Hex]	remarks
Ch1 Alarm Value Lower Limit 1 *8	Alarm value lower limit 1 for Ch1. The unit is °C or °F.	REAL	0	Ch1 Alarm Value Lower Limit 1	7014	01 hex	• Reserved data in unit version 1.0.
Ch2 Alarm Value Lower Limit 1 *8	Alarm value lower limit 1 for Ch2. The unit is °C or °F.	REAL	0	Ch2 Alarm Value Lower Limit 1		02 hex	
Ch3 Alarm Value Lower Limit 1 *8	Alarm value lower limit 1 for Ch3. The unit is °C or °F.	REAL	0	Ch3 Alarm Value Lower Limit 1		03 hex	
Ch4 Alarm Value Lower Limit 1 *8	Alarm value lower limit 1 for Ch4. The unit is °C or °F.	REAL	0	Ch4 Alarm Value Lower Limit 1		04 hex	
Ch1 Alarm Value 2 *8	Alarm value 2 for Ch1. The unit is °C or °F.	REAL	0	Ch1 Alarm Value 2	7015	01 hex	
Ch2 Alarm Value 2 *8	Alarm value 2 for Ch2. The unit is °C or °F.	REAL	0	Ch2 Alarm Value 2		02 hex	
Ch3 Alarm Value 2 *8	Alarm value 2 for Ch3. The unit is °C or °F.	REAL	0	Ch3 Alarm Value 2		03 hex	
Ch4 Alarm Value 2 *8	Alarm value 2 for Ch4. The unit is °C or °F.	REAL	0	Ch4 Alarm Value 2		04 hex	
Ch1 Alarm Value Upper Limit 2 *8	Alarm value upper limit 2 for Ch1. The unit is °C or °F.	REAL	0	Ch1 Alarm Value Upper Limit 2	7016	01 hex	
Ch2 Alarm Value Upper Limit 2 *8	Alarm value upper limit 2 for Ch2. The unit is °C or °F.	REAL	0	Ch2 Alarm Value Upper Limit 2		02 hex	
Ch3 Alarm Value Upper Limit 2 *8	Alarm value upper limit 2 for Ch3. The unit is °C or °F.	REAL	0	Ch3 Alarm Value Upper Limit 2		03 hex	
Ch4 Alarm Value Upper Limit 2 *8	Alarm value upper limit 2 for Ch4. The unit is °C or °F.	REAL	0	Ch4 Alarm Value Upper Limit 2		04 hex	
Ch1 Alarm Value Lower Limit 2 *8	Alarm value lower limit 2 for Ch1. The unit is °C or °F.	REAL	0	Ch1 Alarm Value Lower Limit 2	7017	01 hex	
Ch2 Alarm Value Lower Limit 1 *8	Alarm value lower limit 2 for Ch2. The unit is °C or °F.	REAL	0	Ch2 Alarm Value Lower Limit 1		02 hex	
Ch3 Alarm Value Lower Limit 2 *8	Alarm value lower limit 2 for Ch3. The unit is °C or °F.	REAL	0	Ch3 Alarm Value Lower Limit 2		03 hex	
Ch4 Alarm Value Lower Limit 2 *8	Alarm value lower limit 2 for Ch4. The unit is °C or °F.	REAL	0	Ch4 Alarm Value Lower Limit 2		04 hex	
Ch1 Heater Burnout Detection Current	Heater burnout detection current for Ch1. The unit is amperes.	REAL	0	Ch1 Heater Burnout Detection Current	7018	01 hex	• Data for adjustment. • Reserved data in unit version 1.0.
Ch2 Heater Burnout Detection Current	Heater burnout detection current for Ch2. The unit is amperes.	REAL	0	Ch2 Heater Burnout Detection Current		02 hex	
Ch3 Heater Burnout Detection Current	Heater burnout detection current for Ch3. The unit is amperes.	REAL	0	Ch3 Heater Burnout Detection Current		03 hex	
Ch4 Heater Burnout Detection Current	Heater burnout detection current for Ch4. The unit is amperes.	REAL	0	Ch4 Heater Burnout Detection Current		04 hex	
Ch1 SSR Failure Detection Current	SSR failure detection current for Ch1. The unit is amperes.	REAL	50	Ch1 SSR Failure Detection Current	7019	01 hex	
Ch2 SSR Failure Detection Current	SSR failure detection current for Ch2. The unit is amperes.	REAL	50	Ch2 SSR Failure Detection Current		02 hex	
Ch3 SSR Failure Detection Current	SSR failure detection current for Ch3. The unit is amperes.	REAL	50	Ch3 SSR Failure Detection Current		03 hex	
Ch4 SSR Failure Detection Current	SSR failure detection current for Ch4. The unit is amperes.	REAL	50	Ch4 SSR Failure Detection Current		04 hex	
Ch1 PV Input Shift	PV input shift for Ch1. The unit is 0.1°C or 0.1°F.	INT	0	Ch1 PV Input Shift	701A	01 hex	
Ch2 PV Input Shift	PV input shift for Ch2. The unit is 0.1°C or 0.1°F.	INT	0	Ch2 PV Input Shift		02 hex	
Ch3 PV Input Shift	PV input shift for Ch3. The unit is 0.1°C or 0.1°F.	INT	0	Ch3 PV Input Shift		03 hex	
Ch4 PV Input Shift	PV input shift for Ch4. The unit is 0.1°C or 0.1°F.	INT	0	Ch4 PV Input Shift		04 hex	

Data name	Description	Data types	Default value	I/O port name	Index [Hex]	Subindex [Hex]	remarks
Ch1 Input Digital Filter	Input Digital Filter for Ch1. The unit is 0.1 s.	UNIT	0	Ch1 Input Digital Filter	701B	01 hex	• Data for adjustment. • Reserved data in unit version 1.0.
Ch2 Input Digital Filter	Input Digital Filter for Ch2. The unit is 0.1 s.	UNIT	0	Ch2 Input Digital Filter		02 hex	
Ch3 Input Digital Filter	Input Digital Filter for Ch3. The unit is 0.1 s.	UNIT	0	Ch3 Input Digital Filter		03 hex	
Ch4 Input Digital Filter	Input Digital Filter for Ch4. The unit is 0.1 s.	UNIT	0	Ch4 Input Digital Filter		04 hex	
Ch1 Hysteresis (Heating)	Hysteresis (heating) for Ch1. The unit is 0.1°C or 0.1°F.	UNIT	10	Ch1 Hysteresis (Heating)	701C	01 hex	
Ch2 Hysteresis (Heating)	Hysteresis (heating) for Ch2. The unit is 0.1°C or 0.1°F.	UNIT	10	Ch2 Hysteresis (Heating)		02 hex	
Ch3 Hysteresis (Heating)	Hysteresis (heating) for Ch3. The unit is 0.1°C or 0.1°F.	UNIT	10	Ch3 Hysteresis (Heating)		03 hex	
Ch4 Hysteresis (Heating)	Hysteresis (heating) for Ch4. The unit is 0.1°C or 0.1°F.	UNIT	10	Ch4 Hysteresis (Heating)		04 hex	
Ch1 Hysteresis (Cooling)	Hysteresis (cooling) for Ch1. The unit is 0.1°C or 0.1°F.	UNIT	10	Ch1 Hysteresis (Cooling)	701D	01 hex	
Ch2 Hysteresis (Cooling)	Hysteresis (cooling) for Ch2. The unit is 0.1°C or 0.1°F.	UNIT	10	Ch2 Hysteresis (Cooling)		02 hex	
Ch3 Hysteresis (Cooling)	Hysteresis (cooling) for Ch3. The unit is 0.1°C or 0.1°F.	UNIT	10	Ch3 Hysteresis (Cooling)		03 hex	
Ch4 Hysteresis (Cooling)	Hysteresis (cooling) for Ch4. The unit is 0.1°C or 0.1°F.	UNIT	10	Ch4 Hysteresis (Cooling)		04 hex	

*1. Refer to *6-1-2 Details about Aggregated Data* on page 6-16 for details about the data.

*2. "Ch□ Set Point INT" and "Ch□ Set Point REAL" cannot be used at the same time. Assign one of them.

*3. The range of data that can be set to "Ch□ Set Point INT" is as follows.
-32000 to 32000
However, if you set a value that exceeds the input setting range determined by the input type, the upper limit or the lower limit of the input setting range is applied as the set point.

*4. The range of data that can be set to "Ch□ Set Point REAL" is as follows.
-3200 to 3200
However, if you set a value that exceeds the input setting range determined by the input type, the upper limit or the lower limit of the input setting range is applied as the set point.

*5. "Ch□ Manual MV INT" and "Ch□ Manual MV REAL" cannot be used at the same time. Assign one of them.

*6. The settable data range for "Ch□ Manual MV INT" is as follows. If a negative value is set for the heating/cooling control type, it results in the cooling output.
Standard control: -50 to 1050
Heating and cooling control -1050 to 1050

*7. The settable data range for "Ch□ Manual MV REAL" is as follows. If a negative value is set for the heating/cooling control type, it results in the cooling output.
Standard control: -5 to 105
Heating and cooling control -105 to 105

*8. The settable data range for "Ch□ Alarm Value 1", "Alarm value upper limit 1 for Ch□", "Alarm value lower limit 1 for Ch□", "Ch□ Alarm Value 2", "Alarm value upper limit 1 for Ch□", or "Alarm value lower limit 1 for Ch□" is as follows.
-3200 to 3200

6-1-2 Details about Aggregated Data

This section describes aggregated data in detail for each data type.

- Unit Status
- Operating Status
- Output and Alarm Status
- Operation Command

Unit Status

Aggregated data for Unit status.

Data name	Data type	Default value	I/O port name	Index	Subindex
Unit Status	WORD	0000 hex	Unit Status	6000 hex	01 hex

Details about Unit Status are shown in the table below.

Bit	Data name	Description*1	Data types	I/O port name
0	Ambient Temperature Error	0: No errors occurred 1: Error occurred	BOOL	Ambient Temperature Error
1 to 15	Reserved	---	---	---

*1. A 1 indicates TRUE and a 0 indicates FALSE.

Operating Status

Aggregated data for Ch□ Operating Status.

Data name	Data type	Default value	I/O port name	Index	Subindex
Ch1 Operating Status	WORD	0000 hex	Ch1 Operating Status	6001 hex	01 hex
Ch2 Operating Status	WORD	0000 hex	Ch2 Operating Status		02 hex
Ch3 Operating Status	WORD	0000 hex	Ch3 Operating Status		03 hex
Ch4 Operating Status	WORD	0000 hex	Ch4 Operating Status		04 hex

Details about Ch□ Operating Status are shown in the table below.

Bit	Data name	Description*1	Data types	I/O port name
0	Ch□ RUN or STOP Status	0: Run 1: Stop	BOOL	Ch□ RUN or STOP Status
1	Ch□ 100 Percent AT Status	0: 100% AT Stopping 1: 100% AT Executing	BOOL	Ch□ 100 Percent AT Status
2	Ch□ 40 Percent AT Status	0: 40% AT Stopping 1: 40% AT Executing	BOOL	Ch□ 40 Percent AT Status
3	Ch□ Automatic Filter Adjustment Status	0: Stopping 1: Executing	BOOL	Ch□ Automatic Filter Adjustment Status
4	Ch□ Water Cooling Output Adjustment Proportional Band Increase	0: Not increasing 1: Increasing	BOOL	Ch□ Water Cooling Output Adjustment Proportional Band Increase

Bit	Data name	Description*1	Data types	I/O port name
5	Ch□ Water Cooling Output Adjustment Proportional Band Decrease	0: Not decreasing 1: Decreasing	BOOL	Ch□ Water Cooling Output Adjustment Proportional Band Decrease
6	Ch□ Adaptive Control System Performance Evaluation State	0: Performance evaluation is not in progress 1: Performance evaluation is in progress	BOOL	Ch□ Adaptive Control System Performance Evaluation State
7	Ch□ Adaptive Control Notification in Progress	0: No notification 1: Notification	BOOL	Ch□ Adaptive Control Notification in Progress
8	Ch□ Adaptive Control PID Update Enabled	0: Without updatable PID constants 1: With updatable PID constants	BOOL	Ch□ Adaptive Control PID Update Enabled
9	Ch□ Auto or Manual Status	0: Auto mode 1: Manual mode	BOOL	Ch□ Auto or Manual Status
10	Ch□ Reflect Manual MV Status *2	0: Not reflected 1: Reflected	BOOL	Ch□ Reflect Manual MV Status
11	Ch□ Inverting Direct or Reverse Operation Status	0: Not inverting 1: Inverting	BOOL	Ch□ Inverting Direct or Reverse Operation Status
12	Ch□ Tuning Parameter Updated	0: Tuning parameter is not updated 1: Tuning parameter is updated	BOOL	Ch□ Tuning Parameter Updated
13 to 15	Reserved	---	---	---

*1. A 1 indicates TRUE and a 0 indicates FALSE.

*2. Reflected only when "Ch□ Operating Status" is assigned to I/O entry mapping.

Output and Alarm Status

Version Information

Functions are added to bit 9 and bit 10 of “Ch□ Output and Alarm Status” in Temperature Control Units with unit version 1.1 or later.

Aggregated data for Ch□ Output and Alarm Status.

Data name	Data type	Default value	I/O port name	Index	Subindex
Ch1 Output and Alarm Status	WORD	0000 hex	Ch1 Output and Alarm Status	6002 hex	01 hex
Ch2 Output and Alarm Status	WORD	0000 hex	Ch2 Output and Alarm Status		02 hex
Ch3 Output and Alarm Status	WORD	0000 hex	Ch3 Output and Alarm Status		03 hex
Ch4 Output and Alarm Status	WORD	0000 hex	Ch4 Output and Alarm Status		04 hex

Details about the Ch□ Output and Alarm Status are shown in the table below.

Bit	Data name	Description*1	Data types	I/O port name
0	Ch□ Heating Control Output	0: OFF 1: ON	BOOL	Ch□ Heating Control Output
1	Ch□ Cooling Control Output	0: OFF 1: ON	BOOL	Ch□ Cooling Control Output
2	Ch□ Sensor Disconnected Error	0: No errors occurred 1: Error occurred	BOOL	Ch□ Sensor Disconnected Error
3	Ch□ Cold Junction Error	0: No errors occurred 1: Error occurred	BOOL	Ch□ Cold Junction Error
4	Ch□ AD Converter Error	0: No errors occurred 1: Error occurred	BOOL	Ch□ AD Converter Error
5	Ch□ Heater Burnout Detection	0: Not detected 1: Detected	BOOL	Ch□ Heater Burnout Detection
6	Ch□ SSR Failure Detection	0: Not detected 1: Detected	BOOL	Ch□ SSR Failure Detection
7	Ch□ Heater Current Hold	0: Updated 1: Not updated	BOOL	Ch□ Heater Current Hold
8	Ch□ Heater Current Exceeded	0: The measurement range is not exceeded 1: The measurement range is exceeded	BOOL	Ch□ Heater Current Exceeded
9	Alarm 1 Detection *2	0: Not detected 1: Detected	BOOL	Ch□ Alarm 1 Detection
10	Alarm 2 Detection *2	0: Not detected 1: Detected	BOOL	Ch□ Alarm 2 Detection
11 to 15	Reserved	---	---	---

*1. A 1 indicates TRUE and a 0 indicates FALSE.

*2. Reserved data in unit version 1.0.

Operation Command

Version Information

Functions are added to bit 11 of “Ch□ Operation Command” in Temperature Control Units with unit version 1.1 or later.

Aggregated data for Ch□ Operation Command.

Data name	Data type	Default value	I/O port name	Index	Subindex
Ch1 Operation Command	WORD	0000 hex	Ch1 Operation Command	7000 hex	01 hex
Ch2 Operation Command	WORD	0000 hex	Ch2 Operation Command		02 hex
Ch3 Operation Command	WORD	0000 hex	Ch3 Operation Command		03 hex
Ch4 Operation Command	WORD	0000 hex	Ch4 Operation Command		04 hex

- The operation commands are executed in ascending order from bit 0.
- If commands are issued at the same time for operation commands for the same function, only the operation command with the most significant bit is executed.

  Example) When "100% AT" and "AT Cancel" are issued at the same time, only "AT Cancel" is executed.

- When the detection method is edge (rising), the operation command is executed when the value changes from "0" to "1".

  Therefore, when issuing the operation command again, set it to "0" and then change it to "1". If the execution conditions are not satisfied when the operation command is issued, the operation command is not executed. The operation command is issued when the execution conditions are satisfied.
- If the execution conditions are not satisfied when the operation command is issued, the operation command is not executed, but is set as pending. The operation command is executed when the execution conditions are satisfied.

  Example) If "40% AT" is executed during the execution of "100% AT", "40% AT" will be executed after the execution of "100% AT" is completed.
- If the operation command is "1" when the power supply is turned ON, the edge (rising) is detected and the operation command is issued.

Details about Ch☐ Operation Command are shown in the table below.

Bit	Data name	Description*1	Detection method	Data types	I/O port name
0	Ch☐ RUN or STOP	0: Run 1: Stop	Level	BOOL	Ch☐ RUN or STOP
1	Ch☐ 100 Percent AT	0 → 1: 100% AT Executing	Edge (rising)	BOOL	Ch☐ 100 Percent AT
2	Ch☐ 40 Percent AT	0 → 1: 40% AT Executing	Edge (rising)	BOOL	Ch☐ 40 Percent AT
3	Ch☐ AT Cancel	0 → 1: AT Cancel	Edge (rising)	BOOL	Ch☐ AT Cancel
4	Ch☐ Automatic Filter Adjustment Execute	0 → 1: Executing	Edge (rising)	BOOL	Ch☐ Automatic Filter Adjustment Execute
5	Ch☐ Automatic Filter Adjustment Cancel	0 → 1: Cancel	Edge (rising)	BOOL	Ch☐ Automatic Filter Adjustment Cancel
6	Ch☐ Water Cooling Output Adjustment	0: Disable 1: Enable	Level	BOOL	Ch☐ Water Cooling Output Adjustment
7	Ch☐ Adaptive Control PID Update	0 → 1: PID Update by adaptive control	Edge (rising)	BOOL	Ch☐ Adaptive Control PID Update
8	Ch☐ Auto or Manual*2	0: Auto mode 1: Manual mode	Level	BOOL	Ch☐ Auto or Manual
9	Ch☐ Reflect Manual MV	0: Do not reflect 1: Reflect	Level	BOOL	Ch☐ Reflect Manual MV
10	Ch☐ Direct/Reverse Operation	0: Not inverting 1: Inverting	Level	BOOL	Ch☐ Direct/Reverse Operation
11	Reflect Data for Adjustment*3	0: Do not reflect 1: Reflect	Level	BOOL	Ch☐ Reflect Data for Adjustment
12 to 15	Reserved	---	---	---	---

*1. A 1 indicates TRUE and a 0 indicates FALSE.

*2. If you switch to manual mode during AT execution, AT is canceled.

*3. Reserved data in unit version 1.0.

The execution conditions for each operation command are shown in the table below.

Data name	Execution condition*1
RUN or STOP	Command always accepted
100 Percent AT, and 40 Percent AT	Command cannot be accepted in any of the following cases: • Run or Stop is "Stop" • ON/OFF control • 40% AT is executed during 100% AT execution • 100% AT is executed during 40% AT execution • 40% AT is executed for a heating/cooling control type Unit model • "Auto or Manual" bit is "Manual Mode" Moreover, the command cannot be accepted in the following case as well. • For the standard control type, another channel is selected in 2-PID control, auto mode, and “MV Branch Operation”.
Automatic Filter Adjustment	Command cannot be accepted in any of the following cases: • Run or Stop is "Stop" • ON/OFF control • heating and cooling control • "Auto or Manual" bit is "Manual Mode" • AT execution in progress Moreover, the command cannot be accepted in the following case as well. • For the standard control type, another channel is selected in 2-PID control, auto mode, and “MV Branch Operation”.
Auto or Manual	Command cannot be accepted for ON/OFF control.
Adaptive Control PID Update	Command cannot be accepted in any of the following cases: • AT execution in progress • Automatic Filter Adjustment is "Executing"
Inverting Direct or Reverse Operation	Command cannot be accepted in any of the following cases: • AT execution in progress • "Auto or Manual" bit is "Manual Mode" • Automatic Filter Adjustment is "Executing"
Reflect Manual MV	Command always accepted
Reflect Data for Adjustment	Command always accepted

*1. If the execution conditions are not satisfied when the operation command is issued, the operation command is not executed, but is set as pending. The operation command is executed when the execution conditions are satisfied.

Example) If "40% AT" is executed during the execution of "100% AT", "40% AT" will be executed after the execution of "100% AT" is completed.

6-1-3 Registering the Default Values for I/O Data

This section describes the default values of the I/O data.

Input Data Set 1

Yes: Registered by default

No: Not registered by default

---: No I/O data

Index [Hex]	Sub-index [Hex]	Data name		2 channels			4 channels		
				Standard control		Heating and cooling control	Standard control		Heating and cooling control
				With CT input	Without CT input		With CT input	Without CT input	
		Unit Version 1.1 or later	Unit Version 1.0	NX-TC2405	NX-TC2406 NX-TC2408	NX-TC2407	NX-TC3405	NX-TC3406 NX-TC3408	NX-TC3407
6000	01	Unit Status		No	No	No	No	No	No
6001	01	Ch1 Operating Status		Yes	Yes	Yes	Yes	Yes	Yes
	02	Ch2 Operating Status		Yes	Yes	Yes	Yes	Yes	Yes
	03	Ch3 Operating Status		---	---	---	Yes	Yes	Yes
	04	Ch4 Operating Status		---	---	---	Yes	Yes	Yes
6002	01	Ch1 Output and Alarm Status		Yes	Yes	Yes	Yes	Yes	Yes
	02	Ch2 Output and Alarm Status		Yes	Yes	Yes	Yes	Yes	Yes
	03	Ch3 Output and Alarm Status		---	---	---	Yes	Yes	Yes
	04	Ch4 Output and Alarm Status		---	---	---	Yes	Yes	Yes
6003	01	Ambient Temperature		No	No	No	No	No	No
6004	01	Ch1 Decimal Point Position Monitor		Yes	Yes	Yes	Yes	Yes	Yes
	02	Ch2 Decimal Point Position Monitor		Yes	Yes	Yes	Yes	Yes	Yes
	03	Ch3 Decimal Point Position Monitor		---	---	---	Yes	Yes	Yes
	04	Ch4 Decimal Point Position Monitor		---	---	---	Yes	Yes	Yes
6005	01	Ch1 Measured Value INT		Yes	Yes	Yes	Yes	Yes	Yes
	02	Ch2 Measured Value INT		Yes	Yes	Yes	Yes	Yes	Yes
	03	Ch3 Measured Value INT		---	---	---	Yes	Yes	Yes
	04	Ch4 Measured Value INT		---	---	---	Yes	Yes	Yes
6006	01	Ch1 Measured Value REAL		Yes	Yes	Yes	Yes	Yes	Yes
	02	Ch2 Measured Value REAL		Yes	Yes	Yes	Yes	Yes	Yes
	03	Ch3 Measured Value REAL		---	---	---	Yes	Yes	Yes
	04	Ch4 Measured Value REAL		---	---	---	Yes	Yes	Yes
6007	01	Ch1 MV Monitor Heating INT		Yes	Yes	Yes	Yes	Yes	Yes
	02	Ch2 MV Monitor Heating INT		Yes	Yes	Yes	Yes	Yes	Yes
	03	Ch3 MV Monitor Heating INT		---	---	---	Yes	Yes	Yes
	04	Ch4 MV Monitor Heating INT		---	---	---	Yes	Yes	Yes
6008	01	Ch1 MV Monitor Heating REAL		Yes	Yes	Yes	Yes	Yes	Yes
	02	Ch2 MV Monitor Heating REAL		Yes	Yes	Yes	Yes	Yes	Yes
	03	Ch3 MV Monitor Heating REAL		---	---	---	Yes	Yes	Yes
	04	Ch4 MV Monitor Heating REAL		---	---	---	Yes	Yes	Yes
6009	01	Ch1 MV Monitor Cooling INT		---	---	Yes	---	---	Yes
	02	Ch2 MV Monitor Cooling INT		---	---	Yes	---	---	Yes
	03	Ch3 MV Monitor Cooling INT		---	---	---	---	---	Yes
	04	Ch4 MV Monitor Cooling INT		---	---	---	---	---	Yes

Index [Hex]	Sub-index [Hex]	Data name		2 channels			4 channels		
				Standard control		Heating and cooling control	Standard control		Heating and cooling control
				With CT input	Without CT input		With CT input	Without CT input	
		Unit Version 1.1 or later	Unit Version 1.0	NX-TC2405	NX-TC2406 NX-TC2408	NX-TC2407	NX-TC3405	NX-TC3406 NX-TC3408	NX-TC3407
600A	01	Ch1 MV Monitor Cooling REAL		---	---	Yes	---	---	Yes
	02	Ch2 MV Monitor Cooling REAL		---	---	Yes	---	---	Yes
	03	Ch3 MV Monitor Cooling REAL		---	---	---	---	---	Yes
	04	Ch4 MV Monitor Cooling REAL		---	---	---	---	---	Yes
600B	01	Ch1 Heater Current UINT		Yes	---	---	Yes	---	---
	02	Ch2 Heater Current UINT		Yes	---	---	Yes	---	---
	03	Ch3 Heater Current UINT		---	---	---	Yes	---	---
	04	Ch4 Heater Current UINT		---	---	---	Yes	---	---
600C	01	Ch1 Heater Current REAL		Yes	---	---	Yes	---	---
	02	Ch2 Heater Current REAL		Yes	---	---	Yes	---	---
	03	Ch3 Heater Current REAL		---	---	---	Yes	---	---
	04	Ch4 Heater Current REAL		---	---	---	Yes	---	---
600D	01	Ch1 Leakage Current UINT		Yes	---	---	Yes	---	---
	02	Ch2 Leakage Current UINT		Yes	---	---	Yes	---	---
	03	Ch3 Leakage Current UINT		---	---	---	Yes	---	---
	04	Ch4 Leakage Current UINT		---	---	---	Yes	---	---
600E	01	Ch1 Leakage Current REAL		Yes	---	---	Yes	---	---
	02	Ch2 Leakage Current REAL		Yes	---	---	Yes	---	---
	03	Ch3 Leakage Current REAL		---	---	---	Yes	---	---
	04	Ch4 Leakage Current REAL		---	---	---	Yes	---	---
600F	01	Ch1 Proportional Band Monitor	Ch1 Reserved	Yes	Yes	Yes	Yes	Yes	Yes
	02	Ch2 Proportional Band Monitor	Ch2 Reserved	Yes	Yes	Yes	Yes	Yes	Yes
	03	Ch3 Proportional Band Monitor	Ch3 Reserved	---	---	---	Yes	Yes	Yes
	04	Ch4 Proportional Band Monitor	Ch4 Reserved	---	---	---	Yes	Yes	Yes
6010	01	Ch1 Integral Time Monitor	Ch1 Reserved	Yes	Yes	Yes	Yes	Yes	Yes
	02	Ch2 Integral Time Monitor	Ch2 Reserved	Yes	Yes	Yes	Yes	Yes	Yes
	03	Ch3 Integral Time Monitor	Ch3 Reserved	---	---	---	Yes	Yes	Yes
	04	Ch4 Integral Time Monitor	Ch4 Reserved	---	---	---	Yes	Yes	Yes
6011	01	Ch1 Derivative Time Monitor	Ch1 Reserved	Yes	Yes	Yes	Yes	Yes	Yes
	02	Ch2 Derivative Time Monitor	Ch2 Reserved	Yes	Yes	Yes	Yes	Yes	Yes
	03	Ch3 Derivative Time Monitor	Ch3 Reserved	---	---	---	Yes	Yes	Yes
	04	Ch4 Derivative Time Monitor	Ch4 Reserved	---	---	---	Yes	Yes	Yes

Index [Hex]	Sub-index [Hex]	Data name		2 channels			4 channels		
				Standard control		Heating and cooling control	Standard control		Heating and cooling control
				With CT input	Without CT input		With CT input	Without CT input	
		Unit Version 1.1 or later	Unit Version 1.0	NX-TC2405	NX-TC2406 NX-TC2408	NX-TC2407	NX-TC3405	NX-TC3406 NX-TC3408	NX-TC3407
6012	01	Ch1 Proportional Band (Cooling) Monitor	Ch1 Reserved	---	---	Yes	---	---	Yes
	02	Ch2 Proportional Band (Cooling) Monitor	Ch2 Reserved	---	---	Yes	---	---	Yes
	03	Ch3 Proportional Band (Cooling) Monitor	Ch3 Reserved	---	---	---	---	---	Yes
	04	Ch4 Proportional Band (Cooling) Monitor	Ch4 Reserved	---	---	---	---	---	Yes
6013	01	Ch1 Integral Time (Cooling) Monitor	Ch1 Reserved	---	---	Yes	---	---	Yes
	02	Ch2 Integral Time (Cooling) Monitor	Ch2 Reserved	---	---	Yes	---	---	Yes
	03	Ch3 Integral Time (Cooling) Monitor	Ch3 Reserved	---	---	---	---	---	Yes
	04	Ch4 Integral Time (Cooling) Monitor	Ch4 Reserved	---	---	---	---	---	Yes
6014	01	Ch1 Derivative Time (Cooling) Monitor	Ch1 Reserved	---	---	Yes	---	---	Yes
	02	Ch2 Derivative Time (Cooling) Monitor	Ch2 Reserved	---	---	Yes	---	---	Yes
	03	Ch3 Derivative Time (Cooling) Monitor	Ch3 Reserved	---	---	---	---	---	Yes
	04	Ch4 Derivative Time (Cooling) Monitor	Ch4 Reserved	---	---	---	---	---	Yes
6015	01	Ch1 SP Response Proportional Band Monitor	Ch1 Reserved	No	No	---	No	No	---
	02	Ch2 SP Response Proportional Band Monitor	Ch2 Reserved	No	No	---	No	No	---
	03	Ch3 SP Response Proportional Band Monitor	Ch3 Reserved	---	---	---	No	No	---
	04	Ch4 SP Response Proportional Band Monitor	Ch4 Reserved	---	---	---	No	No	---

Index [Hex]	Sub-index [Hex]	Data name		2 channels			4 channels		
				Standard control		Heating and cooling control	Standard control		Heating and cooling control
				With CT input	Without CT input		With CT input	Without CT input	
		Unit Version 1.1 or later	Unit Version 1.0	NX-TC2405	NX-TC2406 NX-TC2408	NX-TC2407	NX-TC3405	NX-TC3406 NX-TC3408	NX-TC3407
6016	01	Ch1 SP Response Integral Time Monitor	Ch1 Reserved	No	No	---	No	No	---
	02	Ch2 SP Response Integral Time Monitor	Ch2 Reserved	No	No	---	No	No	---
	03	Ch3 SP Response Integral Time Monitor	Ch3 Reserved	---	---	---	No	No	---
	04	Ch4 SP Response Integral Time Monitor	Ch4 Reserved	---	---	---	No	No	---
6017	01	Ch1 SP Response Derivative Time Monitor	Ch1 Reserved	No	No	---	No	No	---
	02	Ch2 SP Response Derivative Time Monitor	Ch2 Reserved	No	No	---	No	No	---
	03	Ch3 SP Response Derivative Time Monitor	Ch3 Reserved	---	---	---	No	No	---
	04	Ch4 SP Response Derivative Time Monitor	Ch4 Reserved	---	---	---	No	No	---
6018	01	Ch1 SP Response Coefficient Number Monitor	Ch1 Reserved	No	No	---	No	No	---
	02	Ch2 SP Response Coefficient Number Monitor	Ch2 Reserved	No	No	---	No	No	---
	03	Ch3 SP Response Coefficient Number Monitor	Ch3 Reserved	---	---	---	No	No	---
	04	Ch4 SP Response Coefficient Number Monitor	Ch4 Reserved	---	---	---	No	No	---
6019	01	Ch1 Disturbance Proportional Band Monitor	Ch1 Reserved	No	No	---	No	No	---
	02	Ch2 Disturbance Proportional Band Monitor	Ch2 Reserved	No	No	---	No	No	---
	03	Ch3 Disturbance Proportional Band Monitor	Ch3 Reserved	---	---	---	No	No	---
	04	Ch4 Disturbance Proportional Band Monitor	Ch4 Reserved	---	---	---	No	No	---

Index [Hex]	Sub-index [Hex]	Data name		2 channels			4 channels		
				Standard control		Heating and cooling control	Standard control		Heating and cooling control
				With CT input	Without CT input		With CT input	Without CT input	
		Unit Version 1.1 or later	Unit Version 1.0	NX-TC2405	NX-TC2406 NX-TC2408	NX-TC2407	NX-TC3405	NX-TC3406 NX-TC3408	NX-TC3407
601A	01	Ch1 Disturbance Integral Time Monitor	Ch1 Reserved	No	No	---	No	No	---
	02	Ch2 Disturbance Integral Time Monitor	Ch2 Reserved	No	No	---	No	No	---
	03	Ch3 Disturbance Integral Time Monitor	Ch3 Reserved	---	---	---	No	No	---
	04	Ch4 Disturbance Integral Time Monitor	Ch4 Reserved	---	---	---	No	No	---
601B	01	Ch1 Disturbance Derivative Time Monitor	Ch1 Reserved	No	No	---	No	No	---
	02	Ch2 Disturbance Derivative Time Monitor	Ch2 Reserved	No	No	---	No	No	---
	03	Ch3 Disturbance Derivative Time Monitor	Ch3 Reserved	---	---	---	No	No	---
	04	Ch4 Disturbance Derivative Time Monitor	Ch4 Reserved	---	---	---	No	No	---
601C	01	Ch1 Input Digital Filter Monitor	Ch1 Reserved	No	No	No	No	No	No
	02	Ch2 Input Digital Filter Monitor	Ch2 Reserved	No	No	No	No	No	No
	03	Ch3 Input Digital Filter Monitor	Ch3 Reserved	---	---	---	No	No	No
	04	Ch4 Input Digital Filter Monitor	Ch4 Reserved	---	---	---	No	No	No
601D	01	Response flag	Ch1 Reserved	Yes	Yes	Yes	Yes	Yes	Yes

Output Data Set 1

Yes: Registered by default

No: Not registered by default

---: No I/O data

Index [Hex]	Sub-index [Hex]	Data name		2 channels			4 channels		
				Standard control		Heating and cooling control	Standard control		Heating and cooling control
				With CT input	Without CT input		With CT input	Without CT input	
		Unit Version 1.1 or later	Unit Version 1.0	NX-TC2405	NX-TC2406 NX-TC2408	NX-TC2407	NX-TC3405	NX-TC3406 NX-TC3408	NX-TC3407
7000	01	Ch1 Operation Command		Yes	Yes	Yes	Yes	Yes	Yes
	02	Ch2 Operation Command		Yes	Yes	Yes	Yes	Yes	Yes
	03	Ch3 Operation Command		---	---	---	Yes	Yes	Yes
	04	Ch4 Operation Command		---	---	---	Yes	Yes	Yes
7001	01	Ch1 Set Point INT		No	No	No	No	No	No
	02	Ch2 Set Point INT		No	No	No	No	No	No
	03	Ch3 Set Point INT		---	---	---	No	No	No
	04	Ch4 Set Point INT		---	---	---	No	No	No
7002	01	Ch1 Set Point REAL		Yes	Yes	Yes	Yes	Yes	Yes
	02	Ch2 Set Point REAL		Yes	Yes	Yes	Yes	Yes	Yes
	03	Ch3 Set Point REAL		---	---	---	Yes	Yes	Yes
	04	Ch4 Set Point REAL		---	---	---	Yes	Yes	Yes
7003	01	Ch1 Manual MV INT		No	No	No	No	No	No
	02	Ch2 Manual MV INT		No	No	No	No	No	No
	03	Ch3 Manual MV INT		---	---	---	No	No	No
	04	Ch4 Manual MV INT		---	---	---	No	No	No
7004	01	Ch1 Manual MV REAL		Yes	Yes	Yes	Yes	Yes	Yes
	02	Ch2 Manual MV REAL		Yes	Yes	Yes	Yes	Yes	Yes
	03	Ch3 Manual MV REAL		---	---	---	Yes	Yes	Yes
	04	Ch4 Manual MV REAL		---	---	---	Yes	Yes	Yes
7005	01	Ch1 Proportional Band	Ch1 Reserved	Yes	Yes	Yes	Yes	Yes	Yes
	02	Ch2 Proportional Band	Ch2 Reserved	Yes	Yes	Yes	Yes	Yes	Yes
	03	Ch3 Proportional Band	Ch3 Reserved	---	---	---	Yes	Yes	Yes
	04	Ch4 Proportional Band	Ch4 Reserved	---	---	---	Yes	Yes	Yes
7006	01	Ch1 Integration Time	Ch1 Reserved	Yes	Yes	Yes	Yes	Yes	Yes
	02	Ch2 Integration Time	Ch2 Reserved	Yes	Yes	Yes	Yes	Yes	Yes
	03	Ch3 Integration Time	Ch3 Reserved	---	---	---	Yes	Yes	Yes
	04	Ch4 Integration Time	Ch4 Reserved	---	---	---	Yes	Yes	Yes
7007	01	Ch1 Derivative Time	Ch1 Reserved	Yes	Yes	Yes	Yes	Yes	Yes
	02	Ch2 Derivative Time	Ch2 Reserved	Yes	Yes	Yes	Yes	Yes	Yes
	03	Ch3 Derivative Time	Ch3 Reserved	---	---	---	Yes	Yes	Yes
	04	Ch4 Derivative Time	Ch4 Reserved	---	---	---	Yes	Yes	Yes

Index [Hex]	Sub-index [Hex]	Data name		2 channels			4 channels		
				Standard control		Heating and cooling control	Standard control		Heating and cooling control
				With CT input	Without CT input		With CT input	Without CT input	
		Unit Version 1.1 or later	Unit Version 1.0	NX-TC2405	NX-TC2406 NX-TC2408	NX-TC2407	NX-TC3405	NX-TC3406 NX-TC3408	NX-TC3407
7008	01	Ch1 Proportional Band (Cooling)	Ch1 Reserved	---	---	Yes	---	---	Yes
	02	Ch2 Proportional Band (Cooling)	Ch2 Reserved	---	---	Yes	---	---	Yes
	03	Ch3 Proportional Band (Cooling)	Ch3 Reserved	---	---	---	---	---	Yes
	04	Ch4 Proportional Band (Cooling)	Ch4 Reserved	---	---	---	---	---	Yes
7009	01	Ch1 Integral Time (Cooling)	Ch1 Reserved	---	---	Yes	---	---	Yes
	02	Ch2 Integral Time (Cooling)	Ch2 Reserved	---	---	Yes	---	---	Yes
	03	Ch3 Integral Time (Cooling)	Ch3 Reserved	---	---	---	---	---	Yes
	04	Ch4 Integral Time (Cooling)	Ch4 Reserved	---	---	---	---	---	Yes
700A	01	Ch1 Derivative Time (Cooling)	Ch1 Reserved	---	---	Yes	---	---	Yes
	02	Ch2 Derivative Time (Cooling)	Ch2 Reserved	---	---	Yes	---	---	Yes
	03	Ch3 Derivative Time (Cooling)	Ch3 Reserved	---	---	---	---	---	Yes
	04	Ch4 Derivative Time (Cooling)	Ch4 Reserved	---	---	---	---	---	Yes
700B	01	Ch1 SP Response Proportional Band	Ch1 Reserved	No	No	---	No	No	---
	02	Ch2 SP Response Proportional Band	Ch2 Reserved	No	No	---	No	No	---
	03	Ch3 SP Response Proportional Band	Ch3 Reserved	---	---	---	No	No	---
	04	Ch4 SP Response Proportional Band	Ch4 Reserved	---	---	---	No	No	---
700C	01	Ch1 SP Response Integral Time	Ch1 Reserved	No	No	---	No	No	---
	02	Ch2 SP Response Integral Time	Ch2 Reserved	No	No	---	No	No	---
	03	Ch3 SP Response Integral Time	Ch3 Reserved	---	---	---	No	No	---
	04	Ch4 SP Response Integral Time	Ch4 Reserved	---	---	---	No	No	---
700D	01	Ch1 SP Response Derivative Time	Ch1 Reserved	No	No	---	No	No	---
	02	Ch2 SP Response Derivative Time	Ch2 Reserved	No	No	---	No	No	---
	03	Ch3 SP Response Derivative Time	Ch3 Reserved	---	---	---	No	No	---
	04	Ch4 SP Response Derivative Time	Ch4 Reserved	---	---	---	No	No	---

Index [Hex]	Sub-index [Hex]	Data name		2 channels			4 channels		
				Standard control		Heating and cooling control	Standard control		Heating and cooling control
				With CT input	Without CT input		With CT input	Without CT input	
		Unit Version 1.1 or later	Unit Version 1.0	NX-TC2405	NX-TC2406 NX-TC2408	NX-TC2407	NX-TC3405	NX-TC3406 NX-TC3408	NX-TC3407
700E	01	Ch1 SP Response Coefficient Number	Ch1 Reserved	No	No	---	No	No	---
	02	Ch2 SP Response Coefficient Number	Ch2 Reserved	No	No	---	No	No	---
	03	Ch3 SP Response Coefficient Number	Ch3 Reserved	---	---	---	No	No	---
	04	Ch4 SP Response Coefficient Number	Ch4 Reserved	---	---	---	No	No	---
700F	01	Ch1 Disturbance Proportional Band	Ch1 Reserved	No	No	---	No	No	---
	02	Ch2 Disturbance Proportional Band	Ch2 Reserved	No	No	---	No	No	---
	03	Ch3 Disturbance Proportional Band	Ch3 Reserved	---	---	---	No	No	---
	04	Ch4 Disturbance Proportional Band	Ch4 Reserved	---	---	---	No	No	---
7010	01	Ch1 Disturbance Integral Time	Ch1 Reserved	No	No	---	No	No	---
	02	Ch2 Disturbance Integral Time	Ch2 Reserved	No	No	---	No	No	---
	03	Ch3 Disturbance Integral Time	Ch3 Reserved	---	---	---	No	No	---
	04	Ch4 Disturbance Integral Time	Ch4 Reserved	---	---	---	No	No	---
7011	01	Ch1 Disturbance Derivative Time	Ch1 Reserved	No	No	---	No	No	---
	02	Ch2 Disturbance Derivative Time	Ch2 Reserved	No	No	---	No	No	---
	03	Ch3 Disturbance Derivative Time	Ch3 Reserved	---	---	---	No	No	---
	04	Ch4 Disturbance Derivative Time	Ch4 Reserved	---	---	---	No	No	---
7012	01	Ch1 Alarm Value 1	Ch1 Reserved	Yes	Yes	Yes	Yes	Yes	Yes
	02	Ch2 Alarm Value 1	Ch2 Reserved	Yes	Yes	Yes	Yes	Yes	Yes
	03	Ch3 Alarm Value 1	Ch3 Reserved	---	---	---	Yes	Yes	Yes
	04	Ch4 Alarm Value 1	Ch4 Reserved	---	---	---	Yes	Yes	Yes
7013	01	Ch1 Alarm Value Upper Limit 1	Ch1 Reserved	Yes	Yes	Yes	Yes	Yes	Yes
	02	Ch2 Alarm Value Upper Limit 1	Ch2 Reserved	Yes	Yes	Yes	Yes	Yes	Yes
	03	Ch3 Alarm Value Upper Limit 1	Ch3 Reserved	---	---	---	Yes	Yes	Yes
	04	Ch4 Alarm Value Upper Limit 1	Ch4 Reserved	---	---	---	Yes	Yes	Yes

Index [Hex]	Sub-index [Hex]	Data name		2 channels			4 channels		
				Standard control		Heating and cooling control	Standard control		Heating and cooling control
				With CT input	Without CT input		With CT input	Without CT input	
		Unit Version 1.1 or later	Unit Version 1.0	NX-TC2405	NX-TC2406 NX-TC2408	NX-TC2407	NX-TC3405	NX-TC3406 NX-TC3408	NX-TC3407
7014	01	Ch1 Alarm Value Lower Limit 1	Ch1 Reserved	Yes	Yes	Yes	Yes	Yes	Yes
	02	Ch2 Alarm Value Lower Limit 1	Ch2 Reserved	Yes	Yes	Yes	Yes	Yes	Yes
	03	Ch3 Alarm Value Lower Limit 1	Ch3 Reserved	---	---	---	Yes	Yes	Yes
	04	Ch4 Alarm Value Lower Limit 1	Ch4 Reserved	---	---	---	Yes	Yes	Yes
7015	01	Ch1 Alarm Value 2	Ch1 Reserved	Yes	Yes	Yes	Yes	Yes	Yes
	02	Ch2 Alarm Value 2	Ch2 Reserved	Yes	Yes	Yes	Yes	Yes	Yes
	03	Ch3 Alarm Value 2	Ch3 Reserved	---	---	---	Yes	Yes	Yes
	04	Ch4 Alarm Value 2	Ch4 Reserved	---	---	---	Yes	Yes	Yes
7016	01	Ch1 Alarm Value Upper Limit 2	Ch1 Reserved	Yes	Yes	Yes	Yes	Yes	Yes
	02	Ch2 Alarm Value Upper Limit 2	Ch2 Reserved	Yes	Yes	Yes	Yes	Yes	Yes
	03	Ch3 Alarm Value Upper Limit 2	Ch3 Reserved	---	---	---	Yes	Yes	Yes
	04	Ch4 Alarm Value Upper Limit 2	Ch4 Reserved	---	---	---	Yes	Yes	Yes
7017	01	Ch1 Alarm Value Lower Limit 2	Ch1 Reserved	Yes	Yes	Yes	Yes	Yes	Yes
	02	Ch2 Alarm Value Lower Limit 2	Ch2 Reserved	Yes	Yes	Yes	Yes	Yes	Yes
	03	Ch3 Alarm Value Lower Limit 2	Ch3 Reserved	---	---	---	Yes	Yes	Yes
	04	Ch4 Alarm Value Lower Limit 2	Ch4 Reserved	---	---	---	Yes	Yes	Yes
7018	01	Ch1 Heater Burn-out Detection Current	Ch1 Reserved	Yes	---	---	Yes	---	---
	02	Ch2 Heater Burn-out Detection Current	Ch2 Reserved	Yes	---	---	Yes	---	---
	03	Ch3 Heater Burn-out Detection Current	Ch3 Reserved	---	---	---	Yes	---	---
	04	Ch4 Heater Burn-out Detection Current	Ch4 Reserved	---	---	---	Yes	---	---
7019	01	Ch1 SSR Failure Detection Current	Ch1 Reserved	No	---	---	No	---	---
	02	Ch2 SSR Failure Detection Current	Ch2 Reserved	No	---	---	No	---	---
	03	Ch3 SSR Failure Detection Current	Ch3 Reserved	---	---	---	No	---	---
	04	Ch4 SSR Failure Detection Current	Ch4 Reserved	---	---	---	No	---	---

Index [Hex]	Sub-index [Hex]	Data name		2 channels			4 channels		
				Standard control		Heating and cooling control	Standard control		Heating and cooling control
				With CT input	Without CT input		With CT input	Without CT input	
		Unit Version 1.1 or later	Unit Version 1.0	NX-TC2405	NX-TC2406 NX-TC2408	NX-TC2407	NX-TC3405	NX-TC3406 NX-TC3408	NX-TC3407
701A	01	Ch1 PV Input Shift	Ch1 Reserved	Yes	Yes	Yes	Yes	Yes	Yes
	02	Ch2 PV Input Shift	Ch2 Reserved	Yes	Yes	Yes	Yes	Yes	Yes
	03	Ch3 PV Input Shift	Ch3 Reserved	---	---	---	Yes	Yes	Yes
	04	Ch4 PV Input Shift	Ch4 Reserved	---	---	---	Yes	Yes	Yes
701B	01	Ch1 Input Digital Filter	Ch1 Reserved	No	No	No	No	No	No
	02	Ch2 Input Digital Filter	Ch2 Reserved	No	No	No	No	No	No
	03	Ch3 Input Digital Filter	Ch3 Reserved	---	---	---	No	No	No
	04	Ch4 Input Digital Filter	Ch4 Reserved	---	---	---	No	No	No
701C	01	Ch1 Hysteresis (Heating)	Ch1 Reserved	No	No	No	No	No	No
	02	Ch2 Hysteresis (Heating)	Ch2 Reserved	No	No	No	No	No	No
	03	Ch3 Hysteresis (Heating)	Ch3 Reserved	---	---	---	No	No	No
	04	Ch4 Hysteresis (Heating)	Ch4 Reserved	---	---	---	No	No	No
701D	01	Ch1 Hysteresis (Cooling)	Ch1 Reserved	---	---	No	---	---	No
	02	Ch2 Hysteresis (Cooling)	Ch2 Reserved	---	---	No	---	---	No
	03	Ch3 Hysteresis (Cooling)	Ch3 Reserved	---	---	---	---	---	No
	04	Ch4 Hysteresis (Cooling)	Ch4 Reserved	---	---	---	---	---	No

6-1-4 Method of Accessing the I/O Data for Adjustment

Version Information

Data for adjustment is assigned to the “Reserved data” of Ver1.0 in Temperature Control Units with unit version 1.1 or later. For details on the assigned I/O data for adjustment, refer to *Input Data Set 1* on page 6-4 and *Output Data Set 1* on page 6-10.

This section describes the operation method of the I/O data for adjustment in Temperature Control Units.

For an overview of data including the I/O data for adjustment in Temperature Control Units, refer to *1-3-3 Overview of the Data in the Temperature Control Unit and the Access Method* on page 1-14.

Method of accessing the I/O data for adjustment

The I/O data for adjustment can be accessed from the I/O data and also from the Unit operation settings.

To access from the I/O data, set the “Reflect Data for Adjustment” bit of “Ch□ Operation Command” to “True: Reflect”. The set value is immediately reflected in the Temperature Control Unit.

If you set the “Reflect Data for Adjustment” bit to “FALSE: Do not reflect”, you will not be able to access from the I/O data. Access from the Unit operation settings is enabled regardless of the status of the “Reflect Data for Adjustment” bit.

The data targeted by “Reflect Data for Adjustment” is only the output data from the I/O data for adjustment.

● Operating Reflect Data for Adjustment

If you set the “Reflect Data for Adjustment” bit of any channel to “TRUE: Reflect”, the output data of the Temperature Control Unit can be accessed. To stop writing the data for adjustment, set the “Reflect Data for Adjustment” bit of all channels to “FALSE: Do not reflect”.

● Checking Reflect Data for Adjustment

You can check the status from the “Response flag” of the I/O data. The correspondence between the “Reflect Data for Adjustment” and “Response Flag” is shown below.

“Reflect Data for Adjustment” bit	Response flag	
	When writing is normal.	When writing is abnormal.
FALSE: Do not reflect	0000 hex	High-order byte: Index of the I/O data for adjustment in which an error has occurred. Low-order byte of number Low-order byte: Sub-index number of the I/O data for adjustment in which an error has occurred. Example) If the data for adjustment “Ch2 Proportional Band” (Index: 0 x 7005, Sub-index: 0 x 02) is written during AT, an error occurs in the operation conditions, and “0502 hex” is notified.
TRUE: Reflect	0001 hex	

The operation, performed when a write error occurs, is described below.

If an error occurs during writing in multiple data, the largest number assigned in the I/O data is reflected in the response flag.

Example) If “Ch2 Proportional Band” (Index: 0 x 7005, Sub-index: 0 x 02) is assigned after “Ch4 PV Input Shift” (Index: 0 x 701A, Sub-index: 0 x 04) in the I/O data, and a write error due to surpassing of the setting range occurs in both, the response flag becomes “0502 hex”.

Even if an error occurs in the data during writing of multiple data to which I/O is assigned, the writing of the remaining data continues.

The operation of data, in which a write error has occurred, continues with the values before writing. Also, if a write error occurs when power supply is started, the operation continues with the values saved in the unit.

Precautions for Correct Use

- When the data for adjustment is written, make either of the following settings if data for adjustment, that is not to be used in the I/O data default value, exists.
  a) Remove the assignment of the data for adjustment that is not to be used.
  b) Set the default value in the data for adjustment that is not to be used.
     If data for adjustment is written without making the above settings, an incorrect value will be reflected in the Temperature Control Unit, and unexpected operation may be performed.
     Example) Data with the default value as “0” such as the Integral Time and Derivative Time will be reflected. And the performance of PID control will not be exhibited.
- The reflection of the output data is suspended during AT and during automatic filter adjustment.
  When AT and automatic filter adjustment are started, I/O refresh includes writing of data after AT and automatic filter adjustment have ended, without changing the parameters of the Temperature Control Unit.
- When the adaptive control function is implemented by “Automatic updating” or “Notification”, do not set “SP Response PID” and “Disturbance PID” in the output data. When the power supply is started by setting “Reflect Data for Adjustment” to “TRUE: Reflect”, overwriting is performed with the value of “SP Response PID” and “Disturbance PID” in the output data. To operate adaptive control with the values of “SP Response PID” and “Disturbance PID” in the output data, be sure to set the adaptive control function to “Fixed”.

Additional Information

When the “PID constant” and “Input Digital Filter” of the I/O data for adjustment are assigned to the output data and used, read the value in the input data at the time of start of power supply, and reflect the value as the default value of the output data.

Also, since the “PID constant” and “Input Digital Filter” may be updated in the Temperature Control Unit by tuning, read the value in the input data, and reflect the value in the output data.

A sample program is prepared for these operations. For details, refer to *A-5-6 I/O Data Tuning Parameter Update* on page A-111.

6-2 List of Settings

⚠ Caution

Correctly set the various settings for the Temperature Control Unit to match the system being controlled. A mismatch between the settings and the system being controlled may result in unintentional operation that causes damage to the Unit or an accident.

This section describes details of the settings, setting ranges, and default values for the functions that can be used with a Temperature Control Unit.

The setting items of the Temperature Control Unit differ according to the following Temperature Control Unit elements and the number of channels.

- Control type: Standard control type or heating/cooling control type
- Output type: voltage output for driving SSR type or linear current output type
- With CT input: heater burnout detection function or SS failure detection function
- Tuning function: automatic filter adjustment, water cooling output adjustment function or adaptive control

Lists of settings are shown below for each of these elements.

Refer to *1-4 Model List* on page 1-17 for details about the control and output types, presence or absence of CT inputs, and the number of channels for each model of the Temperature Control Units.

If you change any parameter for which changes will be applied only after a Unit restart, restart the NX Unit. The settings are reflected after the Unit is restarted.

It is not necessary to restart the NX Unit for parameters that are updated immediately. The settings are updated immediately after the new settings are transferred even if the NX Unit is not restarted.

Precautions for Safe Use

If you transfer parameters for Unit operation settings that are updated when the Unit is restarted after the settings are changed on the Support Software, the Unit will be restarted after the transfer is completed. Always sufficiently check the safety at the connected devices before you transfer the Unit operation settings.

Set the setting items using one of the following methods.

- Setting the Unit operation settings with the Support Software
- Setting the corresponding NX objects by message communication, such as special instructions

The method to access NX objects through instructions or other messages depends on where the NX Unit is connected.

If the NX Unit is connected to a CPU Unit, access is possible with the Read NX Unit Object instruction and the Write NX Unit Object instruction of the NJ/NX-series Controller.

When the NX Unit is connected to a Communications Coupler Unit, the method depends on the connected Communications Coupler Unit or communications master.

Refer to the user's manual for the connected Communications Coupler Unit for method to use messages to access NX objects on Slave Terminals.

Channel enable/disable parameters

Parameters for enabling or disabling each channel of the Temperature Control Unit are shown in the table below. These setting parameters are available for all models. However, only the Ch 1 and Ch 2 setting items are available for models with two channels (2Ch).

Setting name	Description	Default	Setting range	Unit	Index	Subindex	Update timing	Reference
Ch1 Enable/Disable	Set to enable or disable the channel. FALSE: Disable TRUE: Enable	TRUE	TRUE or FALSE	---	5000 hex	01 hex	After the Unit is restarted	*7-2 Selecting Channel to Use* on page 7-9
Ch2 Enable/Disable						11 hex		
Ch3 Enable/Disable						21 hex		
Ch4 Enable/Disable						31 hex		

Input function parameters

The input function parameters are shown in the table below. These setting parameters are available for all models. However, only the Ch 1 and Ch 2 setting items are available for models with two channels (2Ch).

Setting name	Description	Default	Setting range	Unit	Index	Subindex	Update timing	Reference
Ch1 Input Type	Sets the input type of the sensor connected to the temperature input.	5	*1	---	5001 hex	01 hex	After the Unit is restarted	*7-3-1 Input Type Settings* on page 7-11
Ch2 Input Type						11 hex		
Ch3 Input Type						21 hex		
Ch4 Input Type						31 hex		
Ch1 Temperature Unit	Sets °C (Celsius) or °F (Fahrenheit) as the temperature unit for measured values and set points. 0: °C 1: ° F	0	0/1	---	5001 hex	02 hex	After the Unit is restarted	*7-3-2 Temperature Unit (°C/°F) Setting* on page 7-13
Ch2 Temperature Unit						12 hex		
Ch3 Temperature Unit						22 hex		
Ch4 Temperature Unit						32 hex		
Ch1 Decimal Point	Sets the decimal point position for INT-type measured values and INT-type set points. 0: No decimal point 1: 1 decimal place 2: Follow decimal point position of input type	2	0/1/2	---	5001 hex	03 hex	After the Unit is restarted	*7-3-3 Decimal Point Position Setting* on page 7-15
Ch2 Decimal Point						13 hex		
Ch3 Decimal Point						23 hex		
Ch4 Decimal Point						33 hex		
Ch1 Cold Junction Compensation Enable/Disable	Set to enable or disable cold junction compensation for the thermocouple input. FALSE: Disable TRUE: Enable	TRUE	TRUE or FALSE	---	5001 hex	04 hex	After the Unit is restarted	*7-3-4 Cold Junction Compensation Enable/Disable* on page 7-17
Ch2 Cold Junction Compensation Enable/Disable						14 hex		
Ch3 Cold Junction Compensation Enable/Disable						24 hex		
Ch4 Cold Junction Compensation Enable/Disable						34 hex		
Ch1 PV Input Shift	Performs offset corrections of measured values. Sets the PV input correction value.	0	-1999 to 9999	0.1°C or 0.1: ° F	5001 hex	05 hex	Immediately	*7-3-5 Temperature Input Correction* on page 7-19
Ch2 PV Input Shift						15 hex		
Ch3 PV Input Shift						25 hex		
Ch4 PV Input Shift						35 hex		

Setting name	Description	Default	Setting range	Unit	Index	Subindex	Update timing	Reference
Ch1 PV Input Slope Coefficient	Sets the correction coefficient to correct the slope of the measured value.	1000	1 to 9999	0.001	5001 hex	06 hex	Immediately	*7-3-5 Temperature Input Correction* on page 7-19
Ch2 PV Input Slope Coefficient						16 hex		
Ch3 PV Input Slope Coefficient						26 hex		
Ch4 PV Input Slope Coefficient						36 hex		
Ch1 Input Digital Filter	To remove noise of measured value, set a filter value for the primary delay calculation.	0	0 to 9999	0.1 s	5001 hex	07 hex	Immediately	*7-3-6 Input Digital Filter* on page 7-22
Ch2 Input Digital Filter						17 hex		
Ch3 Input Digital Filter						27 hex		
Ch4 Input Digital Filter						37 hex		

*1. Default value and data range for Ch□ Input Type are as follows.

Set values	Meaning	
0	Pt100	- 200 to 850°C/- 300 to 1500°F
1	Pt100	-199.9 to 500.0°C/-199.9 to 900.0°F
2	Pt100	0.0 to 100.0°C/0.0 to 210.0°F
3	JPt100	-199.9 to 500.0°C/-199.9 to 900.0°F
4	JPt100	0.0 to 100.0°C/0.0 to 210.0°F
5	K	- 200 to 1300°C/-300 to 2300°F
6	K	- 20.0 to 500.0 °C/0.0 to 900.0°F
7	J	- 100 to 850°C/-100 to1500°F
8	J	- 20.0 to 400.0°C/0.0 to750.0°F
9	T	- 200 to 400°C/-300 to 700°F
10	T	- 199.9 to 400.0°C/- 199.9 to 700.0°F
11	E	- 200 to 600°C/-300 to 1100°F
12	L	- 100 to 850°C/-100 to 1500°F
13	U	- 200 to 400°C/-300 to 700°F
14	U	- 199.9 to 400.0°C/-199.9 to 700.0°F
15	N	- 200 to 1300°C/-300 to 2300°F
16	R	0 to 1700°C/0 to 3000°F
17	S	0 to 1700°C/0 to 3000°F
18	B	0 to 1800°C/0 to 3200°F
19	C/W	0 to 2300°C/0 to 3200°F
20	PL II	0 to 1300°C/0 to 2300°F

Control common parameters

Parameters common to the standard control type and heating/cooling control type are shown in the table below. These setting parameters are available for all models. However, only the Ch 1 and Ch 2 setting items are available for models with two channels (2Ch).

Setting name	Description	Default	Setting range	Unit	Index	Subin-dex	Update timing	Reference
Ch1 PID ON/OFF	Set ON/OFF control or 2-PID control. 0: ON/OFF control 1: 2-PID control	1	0/1	---	5002 hex	01 hex	After the Unit is restarted	*7-4-1 ON/OFF control* on page 7-25 *7-4-2 PID control* on page 7-28
Ch2 PID ON/OFF						11 hex		
Ch3 PID ON/OFF						21 hex		
Ch4 PID ON/OFF						31 hex		
Ch1 Proportional Band	Proportional band used for 2-PID control. It is used for the heating side for the heating/cooling control type.	80	1 to 9999	0.1°C or 0.1°F	5002 hex	02 hex	Immediately	*7-4-2 PID control* on page 7-28
Ch2 Proportional Band						12 hex		
Ch3 Proportional Band						22 hex		
Ch4 Proportional Band						32 hex		
Ch1 Integration Time	Integration time used for 2-PID control. It is used for the heating side for the heating/cooling control type.	2330	0 to 39999	0.1 s	5002 hex	03 hex	Immediately	*7-4-2 PID control* on page 7-28
Ch2 Integration Time						13 hex		
Ch3 Integration Time						23 hex		
Ch4 Integration Time						33 hex		
Ch1 Derivative Time	Derivative time used for 2-PID control. It is used for the heating side for the heating/cooling control type.	400	0 to 39999	0.1 s	5002 hex	04 hex	Immediately	*7-4-2 PID control* on page 7-28
Ch2 Derivative Time						14 hex		
Ch3 Derivative Time						24 hex		
Ch4 Derivative Time						34 hex		
Ch1 Hysteresis (Heating)	Used for ON/OFF control. Hysteresis is set to start heating depending on how much temperature decreases for the set point.	10	1 to 9999	0.1°C or 0.1°F	5002 hex	05 hex	Immediately	*7-4-1 ON/OFF control* on page 7-25
Ch2 Hysteresis (Heating)						15 hex		
Ch3 Hysteresis (Heating)						25 hex		
Ch4 Hysteresis (Heating)						35 hex		
Ch1 Direct/Reverse Operation	Sets reverse operation or direct operation. 0: Reverse operation 1: Direct operation	0	0/1	---	5002 hex	06 hex	After the Unit is restarted	*7-4-5 Direct and Reverse Operation* on page 7-38
Ch2 Direct/Reverse Operation						16 hex		
Ch3 Direct/Reverse Operation						26 hex		
Ch4 Direct/Reverse Operation						36 hex		
Ch1 MV at Error	Used during 2-PID control. Sets the manipulated variable that is output when a sensor disconnected error occurs.	0	standard control -50 to 1050 heating and cooling control -1050 to 1050	0.1%	5002 hex	07 hex	Immediately	*7-4-7 MV at Error* on page 7-42
Ch2 MV at Error						17 hex		
Ch3 MV at Error						27 hex		
Ch4 MV at Error						37 hex		

Setting name	Description	Default	Setting range	Unit	Index	Subin-dex	Update timing	Reference
Ch1 MV Upper Limit	Used during 2-PID control. It is set in the case of controlling the upper-limit of manipulated variable (MV).	1000	standard control -50 to 1050 heating and cooling control 0 to 1050	0.1%	5002 hex	08 hex	Immediately	*7-4-8 MV limit* on page 7-44
Ch2 MV Upper Limit						18 hex		
Ch3 MV Upper Limit						28 hex		
Ch4 MV Upper Limit						38 hex		
Ch1 MV Lower Limit	Used during 2-PID control. It is set in the case of controlling the lower-limit of manipulated variable (MV).	Standard control type: 0 Heating/cooling control type: -1000	standard control -50 to 1050 heating and cooling control -1050 to 0	0.1%	5002 hex	09 hex	Immediately	*7-4-8 MV limit* on page 7-44
Ch2 MV Lower Limit						19 hex		
Ch3 MV Lower Limit						29 hex		
Ch4 MV Lower Limit						39 hex		
Ch1 Load Rejection Output Setting	This function performs a preset output operation when the output settings cannot be received due to a communications error between the host and the Temperature Control Unit or due to an NX bus error. Used during 2-PID control. Sets the output operation to perform at load rejection. 0: Continue the control 1: Output the manipulated variable (MV) at the load rejection	0	0/1	---	5002 hex	0A hex	After the Unit is restarted	*7-4-9 Load Rejection MV* on page 7-46
Ch2 Load Rejection Output Setting						1A hex		
Ch3 Load Rejection Output Setting						2A hex		
Ch4 Load Rejection Output Setting						3A hex		
Ch1 Load Rejection MV	Used during 2-PID control. Sets the manipulated value to output if "Output the manipulated variable (MV) at the load rejection" is set in the load rejection output settings.	0	standard control -50 to 1050 heating and cooling control -1050 to 1050	0.1%	5002 hex	0B hex	Immediately	*7-4-9 Load Rejection MV* on page 7-46
Ch2 Load Rejection MV						1B hex		
Ch3 Load Rejection MV						2B hex		
Ch4 Load Rejection MV						3B hex		

Heating and cooling control parameters

The heating/cooling control parameters are shown in the table below. These setting parameters are available for heating/cooling control type models. However, only the Ch 1 and Ch 2 setting items are available for models with two channels (2Ch).

Setting name	Description	Default	Setting range	Unit	Index	Subindex	Update timing	Reference
Ch1 Proportional Band (Cooling)	Cooling-side proportional band used for 2-PID control.	80	1 to 9999	0.1°C or 0.1°F	5003 hex	01 hex	Immediately	*7-4-2 PID control* on page 7-28
Ch2 Proportional Band (Cooling)						11 hex		
Ch3 Proportional Band (Cooling)						21 hex		
Ch4 Proportional Band (Cooling)						31 hex		
Ch1 Integral Time (Cooling)	Cooling-side integration time used for 2-PID control.	2330	0 to 39999	0.1 s	5003 hex	02 hex	Immediately	*7-4-2 PID control* on page 7-28
Ch2 Integral Time (Cooling)						12 hex		
Ch3 Integral Time (Cooling)						22 hex		
Ch4 Integral Time (Cooling)						32 hex		
Ch1 Derivative Time (Cooling)	Cooling-side derivative time used for 2-PID control.	400	0 to 39999	0.1 s	5003 hex	03 hex	Immediately	*7-4-2 PID control* on page 7-28
Ch2 Derivative Time (Cooling)						13 hex		
Ch3 Derivative Time (Cooling)						23 hex		
Ch4 Derivative Time (Cooling)						33 hex		
Ch1 Dead Band	Sets the dead zone to turn OFF the heating and cooling outputs for heating/cooling control type models.	0	-1999 to 9999	0.1°C or 0.1°F	5003 hex	04 hex	Immediately	*7-4-3 Heating and Cooling Control* on page 7-32
Ch2 Dead Band						14 hex		
Ch3 Dead Band						24 hex		
Ch4 Dead Band						34 hex		
Ch1 Hysteresis (Cooling)	Used for ON/OFF control. Hysteresis is set to start heating depending on how much temperature decreases for the set point.	10	1 to 9999	0.1°C or 0.1°F	5003 hex	05 hex	Immediately	*7-4-1 ON/OFF control* on page 7-25
Ch2 Hysteresis (Cooling)						15 hex		
Ch3 Hysteresis (Cooling)						25 hex		
Ch4 Hysteresis (Cooling)						35 hex		
Ch1 Heating/Cooling Tuning Method	Sets the tuning method for heating/cooling control that is used for autotuning (AT). 0: Same as heating control 1: Linear 2: Air cooling 3: Water cooling	0	0/1/2/3	---	5003 hex	06 hex	After the Unit is restarted	*7-4-3 Heating and Cooling Control* on page 7-32
Ch2 Heating/Cooling Tuning Method						16 hex		
Ch3 Heating/Cooling Tuning Method						26 hex		
Ch4 Heating/Cooling Tuning Method						36 hex		
Ch1 LCT Cooling Output Minimum ON Time	This parameters sets the minimum output ON time for the cooling-side control output during autotuning. Sets the time required for operation of the actuator that is connected to the cooling-side control output.	2	1 to 10	0.1 s	5003 hex	07 hex	After the Unit is restarted	*7-4-3 Heating and Cooling Control* on page 7-32
Ch2 LCT Cooling Output Minimum ON Time						17 hex		
Ch3 LCT Cooling Output Minimum ON Time						27 hex		
Ch4 LCT Cooling Output Minimum ON Time						37 hex		

Automatic filter adjustment parameters

The automatic filter adjustment parameters are shown in the table below. These setting parameters are available for standard control type models. However, only the Ch 1 and Ch 2 setting items are available for models with two channels (2Ch).

Setting name	Description	Default	Setting range	Unit	Index	Subin-dex	Update timing	Reference
Ch1 Automatic Filter Adjustment Seal Period	This is the seal period used for automatic filter adjustment. It is the period of small temperature variations (up to several seconds) when sealing. Normally, use the default for tis parameter.	20	1 to 100	0.1 s	5004 hex	01 hex	After the Unit is restarted	*7-5-2 Automatic Filter Adjustment* on page 7-60
Ch2 Automatic Filter Adjustment Seal Period						11 hex		
Ch3 Automatic Filter Adjustment Seal Period						21 hex		
Ch4 Automatic Filter Adjustment Seal Period						31 hex		
Ch1 Automatic Filter Adjustment Hunting Monitor Period	This is the hunting monitor period used for automatic filter adjustment. It is the period of large temperature variations (several tens of seconds or longer) occurring during packing. Normally, use the default for tis parameter.	200	10 to 1999	Seconds	5004 hex	02 hex	After the Unit is restarted	*7-5-2 Automatic Filter Adjustment* on page 7-60
Ch2 Automatic Filter Adjustment Hunting Monitor Period						12 hex		
Ch3 Automatic Filter Adjustment Hunting Monitor Period						22 hex		
Ch4 Automatic Filter Adjustment Hunting Monitor Period						32 hex		

Water cooling output adjustment parameters

The water cooling output adjustment parameters are shown in the table below. These setting parameters are available for heating/cooling control type models. However, only the Ch 1 and Ch 2 setting items are available for models with two channels (2Ch).

Setting name	Description	Default	Setting range	Unit	Index	Subindex	Update timing	Reference
CH1 Water-cooling Proportional Band Increase Constant	This is the increase constant used by the water cooling output adjustment function to adjust the Proportional Band (Cooling) value to reduce hunting. The function works to suppress an excessive cooling output that may cause hunting when the cooling-side proportional band is increased. Normally, use the default for tis parameter.	170	100 to 1000	0.01	5005 hex	01 hex	After the Unit is restarted	*7-5-3 Water Cooling Output Adjustment Function* on page 7-66
Ch2 Water-cooling Proportional Band Increase Constant						11 hex		
Ch3 Water-cooling Proportional Band Increase Constant						21 hex		
Ch4 Water-cooling Proportional Band Increase Constant						31 hex		
Ch1 Water-cooling Proportional Band Decrease Constant	This is the decrease constant used by the water cooling output adjustment function to adjust the Proportional Band (Cooling) value to optimize the disturbance response. The function works to increase an insufficient cooling output that may reduce disturbance response when the cooling proportional band is decreased. Normally, use the default for tis parameter.	90	10 to 99	0.01	5005 hex	02 hex	After the Unit is restarted	*7-5-3 Water Cooling Output Adjustment Function* on page 7-66
Ch2 Water-cooling Proportional Band Decrease Constant						12 hex		
Ch3 Water-cooling Proportional Band Decrease Constant						22 hex		
Ch4 Water-cooling Proportional Band Decrease Constant						32 hex		

Setting name	Description	Default	Setting range	Unit	Index	Subin-dex	Update timing	Reference
Ch1 Water-cooling Proportional Band Increase Threshold	This parameter sets the threshold for the temperature variation used to detect hunting when water-cooling output adjustment is used. If the variation exceeds this threshold, the cooling proportional band is adjusted to reduce hunting. Normally, use the default for tis parameter. However, if the Temperature Unit is set to °F (Fahrenheit), change it to 2.5°F.	14	1 to 2000	0.1°C or 0.1°F	5005 hex	03 hex	Immediately	*7-5-3 Water Cooling Output Adjustment Function* on page 7-66
Ch2 Water-cooling Proportional Band Increase Threshold						13 hex		
Ch3 Water-cooling Proportional Band Increase Threshold						23 hex		
Ch4 Water-cooling Proportional Band Increase Threshold						33 hex		
Ch1 Water-cooling Proportional Band Decrease Threshold	This parameter sets the threshold value to optimize the disturbance response used by the water cooling output adjustment function. If the variation is less than or equal to this threshold, the cooling-side proportional band is adjusted to optimize disturbance response. Normally, use the default for tis parameter. However, if the Temperature Unit is set to °F (Fahrenheit), change it to 1.1°F.	6	0 to 2000	0.1°C or 0.1°F	5005 hex	04 hex	Immediately	*7-5-3 Water Cooling Output Adjustment Function* on page 7-66
Ch2 Water-cooling Proportional Band Decrease Threshold						14 hex		
Ch3 Water-cooling Proportional Band Decrease Threshold						24 hex		
Ch4 Water-cooling Proportional Band Decrease Threshold						34 hex		

Adaptive control parameters

The adaptive control parameters are shown in the table below. These setting parameters are available for standard control type models. However, only the Ch 1 and Ch 2 setting items are available for models with two channels (2Ch).

Setting name	Description	Default	Setting range	Unit	Index	Subindex	Update timing	Reference
Ch1 Adaptive Control	Sets the operation method for adaptive control. 0: Disable 1: Fixed 2: Notification 3: Automatic updating	0	0/1/2/3	---	5006 hex	01 hex	After the Unit is restarted	*7-5-4 Adaptive control* on page 7-71
Ch2 Adaptive Control						11 hex		
Ch3 Adaptive Control						21 hex		
Ch4 Adaptive Control						31 hex		
Ch1 Model Creation PV Amplitude	This is one of the model parameters used for adaptive control. It expresses the characteristics of the system. Set the same parameter values to transfer the system characteristics measured by another Temperature Control Unit.	0	0 to 9999	0.01% FS	5006 hex	02 hex	After the Unit is restarted	*7-5-4 Adaptive control* on page 7-71
Ch2 Model Creation PV Amplitude						12 hex		
Ch3 Model Creation PV Amplitude						22 hex		
Ch4 Model Creation PV Amplitude						32 hex		
Ch1 Model Creation MV Amplitude	This is one of the model parameters used for adaptive control. It expresses the characteristics of the system. Set the same parameter values to transfer the system characteristics measured by another Temperature Control Unit.	0	0 to 1000	0.1%FS	5006 hex	03 hex	After the Unit is restarted	*7-5-4 Adaptive control* on page 7-71
Ch2 Model Creation MV Amplitude						13 hex		
Ch3 Model Creation MV Amplitude						23 hex		
Ch4 Model Creation MV Amplitude						33 hex		
Ch1 Model Creation ON Time	This is one of the model parameters used for adaptive control. It expresses the characteristics of the system. Set the same parameter values to transfer the system characteristics measured by another Temperature Control Unit.	0	0 to 9999	---	5006 hex	04 hex	After the Unit is restarted	*7-5-4 Adaptive control* on page 7-71
Ch2 Model Creation ON Time						14 hex		
Ch3 Model Creation ON Time						24 hex		
Ch4 Model Creation ON Time						34 hex		

Setting name	Description	Default	Setting range	Unit	Index	Subin-dex	Update timing	Reference
Ch1 Model Creation OFF Time	This is one of the model parameters used for adaptive control. It expresses the characteristics of the system. Set the same parameter values to transfer the system characteristics measured by another Temperature Control Unit.	0	0 to 9999	---	5006 hex	05 hex	After the Unit is restarted	*7-5-4 Adaptive control* on page 7-71
Ch2 Model Creation OFF Time						15 hex		
Ch3 Model Creation OFF Time						25 hex		
Ch4 Model Creation OFF Time						35 hex		
Ch1 Adaptive Control Operation Possible Deviation	Specifies the range where adaptive control operation is possible. This shows the proportion of the difference between the set point and 0°C. The system performance of the adaptive control is evaluated if the measured value (PV) at the start of adaptive control is outside the deviation specified by this parameter. To maintain the performance of adaptive control, do not set a value less than 50%.	500	0 to 1000	0.1%	5006 hex	06 hex	After the Unit is restarted	*7-5-4 Adaptive control* on page 7-71
Ch2 Adaptive Control Operation Possible Deviation						16 hex		
Ch3 Adaptive Control Operation Possible Deviation						26 hex		
Ch4 Adaptive Control Operation Possible Deviation						36 hex		
Ch1 System Fluctuation Reference Deviation	This is the criterion to evaluate when to provide notification if "Adaptive Control" is set to "Notification". If the rate of change in the proportional band calculated during system performance evaluation exceeds this reference value, the cause of temperature fluctuation (system fluctuation) is notified by the Adaptive Control Notification in Progress bit of "Ch□ Operating Status".	150	0 to 1000	0.1%	5006 hex	07 hex	After the Unit is restarted	*7-5-4 Adaptive control* on page 7-71
Ch2 System Fluctuation Reference Deviation						17 hex		
Ch3 System Fluctuation Reference Deviation						27 hex		
Ch4 System Fluctuation Reference Deviation						37 hex		

Setting name	Description	Default	Setting range	Unit	Index	Subindex	Update timing	Reference
Ch1 System Fluctuation Reference Proportional Band	This parameter is enabled only when "Adaptive Control" is set to "Notification". It is automatically calculated by the Temperature Control Unit. It is the proportional band that can be legend to detect the system fluctuations, and is judged that the system fluctuations occur if the proportional band for set point response calculated by adaptive control exceeds the system fluctuation reference deviation.	0	1 to 9999	0.1°C or 0.1°F	5006 hex	08 hex	The value is automatically set immediately. The value cannot be written.	*7-5-4 Adaptive control* on page 7-71
Ch2 System Fluctuation Reference Proportional Band						18 hex		
Ch3 System Fluctuation Reference Proportional Band						28 hex		
Ch4 System Fluctuation Reference Proportional Band						38 hex		
Ch1 System Fluctuation Average Deviation	This parameter is enabled only when "Adaptive Control" is set to "Notification". It is automatically calculated by the Temperature Control Unit. It is possible to consider how much the system fluctuates from the fluctuation range of the proportional band.	0	0 to 10000	0.1%	5006 hex	09 hex	The value is automatically set immediately. The value cannot be written.	*7-5-4 Adaptive control* on page 7-71
Ch2 System Fluctuation Average Deviation						19 hex		
Ch3 System Fluctuation Average Deviation						29 hex		
Ch4 System Fluctuation Average Deviation						39 hex		

PID constant parameters for adaptive control

The PID constant parameters for adaptive control are shown in the table below. These setting parameters are available for standard control type models. However, only the Ch 1 and Ch 2 setting items are available for models with two channels (2Ch).

Setting name	Description	Default	Setting range	Unit	Index	Subindex	Update timing	Reference
Ch1 SP Response Proportional Band	This is the set point response proportional band for adaptive control that is used in the transient state. When the adaptive control parameter is not set to "Disable", it is automatically calculated by AT or adaptive control. After the calculation, do not change the setting.	80	1 to 9999	0.1°C or 0.1°F	5007 hex	01 hex	Immediately	*7-5-4 Adaptive control* on page 7-71
Ch2 SP Response Proportional Band						11 hex		
Ch3 SP Response Proportional Band						21 hex		
Ch4 SP Response Proportional Band						31 hex		
Ch1 SP Response Integral Time	This is the set point response integral time for adaptive control that is used in the transient state. When the adaptive control parameter is not set to "Disable", it is automatically calculated by AT or adaptive control. After the calculation, do not change the setting.	2330	0 to 39999	0.1 s	5007 hex	02 hex	Immediately	*7-5-4 Adaptive control* on page 7-71
Ch2 SP Response Integral Time						12 hex		
Ch3 SP Response Integral Time						22 hex		
Ch4 SP Response Integral Time						32 hex		
Ch1 SP Response Derivative Time	This is the set point response derivative time for adaptive control that is used in the transient state. When the adaptive control parameter is not set to "Disable", it is automatically calculated by AT or adaptive control. After the calculation, do not change the setting.	400	0 to 39999	0.1 s	5007 hex	03 hex	Immediately	*7-5-4 Adaptive control* on page 7-71
Ch2 SP Response Derivative Time						13 hex		
Ch3 SP Response Derivative Time						23 hex		
Ch4 SP Response Derivative Time						33 hex		
Ch1 SP Response Coefficient Number	This is the set point response coefficient number for adaptive control that is used in the transient state. When the adaptive control parameter is not set to "Disable", it is automatically calculated by AT or adaptive control. After the calculation, do not change the setting.	0	0 to 9999	---	5007 hex	04 hex	Immediately	*7-5-4 Adaptive control* on page 7-71
Ch2 SP Response Coefficient Number						14 hex		
Ch3 SP Response Coefficient Number						24 hex		
Ch4 SP Response Coefficient Number						34 hex		

Setting name	Description	Default	Setting range	Unit	Index	Subindex	Update timing	Reference
Ch1 Disturbance Proportional Band	This is the disturbance proportional band for adaptive control that is used in the steady state. When the adaptive control parameter is not set to "Disable", it is automatically calculated by AT or adaptive control. After the calculation, do not change the setting.	80	1 to 9999	0.1°C or 0.1°F	5007 hex	05 hex	Immediately	*7-5-4 Adaptive control* on page 7-71
Ch2 Disturbance Proportional Band						15 hex		
Ch3 Disturbance Proportional Band						25 hex		
Ch4 Disturbance Proportional Band						35 hex		
Ch1 Disturbance Integral Time	This is the disturbance integral time for adaptive control that is used in the steady state. When the adaptive control parameter is not set to "Disable", it is automatically calculated by AT or adaptive control. After the calculation, do not change the setting.	2330	0 to 39999	0.1 s	5007 hex	06 hex	Immediately	*7-5-4 Adaptive control* on page 7-71
Ch2 Disturbance Integral Time						16 hex		
Ch3 Disturbance Integral Time						26 hex		
Ch4 Disturbance Integral Time						36 hex		
Ch1 Disturbance Derivative Time	This is the disturbance derivative time for adaptive control that is used in the steady state. When the adaptive control parameter is not set to "Disable", it is automatically calculated by AT or adaptive control. After the calculation, do not change the setting.	400	0 to 39999	0.1 s	5007 hex	07 hex	Immediately	*7-5-4 Adaptive control* on page 7-71
Ch2 Disturbance Derivative Time						17 hex		
Ch3 Disturbance Derivative Time						27 hex		
Ch4 Disturbance Derivative Time						37 hex		

Setting parameters for voltage output for driving SSR that are common to all control models

The table below shows the setting parameters for voltage outputs for driving SSR that are common to the standard control type and heating/cooling control type models. The setting parameters are provided for models with voltage output for driving SSR. However, only the Ch 1 and Ch 2 setting items are available for models with two channels (2Ch).

Setting name	Description	Default	Setting range	Unit	Index	Subindex	Update timing	Reference
Ch1 Control Period (Heating)	Sets the control period (heating) for time-proportional output. -2: 0.1 s -1: 0.2 s 0: 0.5 s 1 to 99: 1 to 99 s	2	-2 to 99	---	5009 hex	01 hex	After the Unit is restarted	*7-6-1 Control Period* on page 7-87
Ch2 Control Period (Heating)						11 hex		
Ch3 Control Period (Heating)						21 hex		
Ch4 Control Period (Heating)						31 hex		
Ch1 Minimum Output ON/OFF Band	Sets the minimum manipulated value output by the heating side control output or the cooling side control output. You are recommended to change them according to the operating conditions of the actuator connected to the output terminals.	10	0 to 500	0.1%	5009 hex	02 hex	After the Unit is restarted	*7-6-2 Minimum Output ON/OFF Band* on page 7-89
Ch2 Minimum Output ON/OFF Band						12 hex		
Ch3 Minimum Output ON/OFF Band						22 hex		
Ch4 Minimum Output ON/OFF Band						32 hex		

Setting parameters for voltage output for driving SSR in heating/cooling control type models

The table below shows the setting parameters for voltage output for driving SSR in heating/cooling control type models. The setting parameters are provided for models with voltage output for driving SSR in heating/cooling control type. However, only the Ch 1 and Ch 2 setting items are available for models with two channels (2Ch).

Setting name	Description	Default	Setting range	Unit	Index	Subindex	Update timing	Reference
Ch1 Control Period (Cooling)	Sets the control period (cooling) for time-proportional output. -2: 0.1 s -1: 0.2 s 0: 0.5 s 1 to 99: 1 to 99 s	2	-2 to 99	---	500A hex	01 hex	After the Unit is restarted	*7-6-1 Control Period* on page 7-87
Ch2 Control Period (Cooling)						11 hex		
Ch3 Control Period (Cooling)						21 hex		
Ch4 Control Period (Cooling)						31 hex		

Setting parameters for MV Branch

The setting parameters for linear current output are shown in the table below. These setting parameters are available for models with linear current output. However, only the Ch 1 and Ch 2 setting items are available for models with two channels (2Ch).

Setting name	Description	Default	Setting range	Unit	Index	Subindex	Update timing	Reference
Ch1 Output Signal Range	Sets the output signal range according to actuator that is connected to output terminal. 0: 4 to 20 mA 1: 0 to 20 mA	0	0/1	---	500B hex	01 hex	After the Unit is restarted	*7-6-3 Output Signal Range Setting* on page 7-90
Ch2 Output Signal Range						11 hex		
Ch3 Output Signal Range						21 hex		
Ch4 Output Signal Range						31 hex		

Setting parameters for MV branch operation

The setting parameters for MV branch operation are shown in the table below. These setting parameters are available for standard control type models. However, only the Ch 1 and Ch 2 setting items are available for models with two channels (2Ch).

Setting name	Description	Default	Setting range	Unit	Index	Subindex	Update timing	Reference
Ch1 MV Branch Operation	Set whether to enable or disable the measured value of the branch-source channel and the local channel.	0	0 to 7	---	500C hex	01 hex	After the Unit is restarted	*7-4-11 Load-short circuit protection* on page 7-56
Ch2 MV Branch Operation						11 hex		
Ch3 MV Branch Operation						21 hex		
Ch4 MV Branch Operation						31 hex		
Ch1 MV Slope	Set the slope value for the calculation and output of the manipulated variables of the branch-source channel.	1000	1 to 9999	0.001	500C hex	02 hex	Immediately	*7-4-11 Load-short circuit protection* on page 7-56
Ch2 MV Slope						12 hex		
Ch3 MV Slope						22 hex		
Ch4 MV Slope						32 hex		
Ch1 MV Offset	Set the offset for the calculation and output of the manipulated variables of the branch-source channel.	0	-1999 to 9999	0.1%	500C hex	03 hex	Immediately	*7-4-11 Load-short circuit protection* on page 7-56
Ch2 MV Offset						13 hex		
Ch3 MV Offset						23 hex		
Ch4 MV Offset						33 hex		

Heater error detection parameters

Heater error detection is a generic term for heater burnout detection and SSR fault detection.

The heater error detection parameters are shown in the table below. The setting parameters are provided for models with CT inputs. However, only the Ch 1 and Ch 2 setting items are available for models with two channels (2Ch).

Setting name	Description	Default	Setting range	Unit	Index	Subindex	Update timing	Reference
Ch1 Heater Burnout Detection Current	Sets the heater burnout detection current. The heater burnout detection is output when the heater current value falls below the setting of the parameter. When the set value is "0", the "Heater Burnout Detection" bit of "Ch□ Output and Alarm Status" turns OFF. When the set value is "50", the "Heater Burnout Detection" bit turns ON.	0	0 to 50	A	500D hex	01 hex	Immediately	*7-7-2 Heater Burnout Detection* on page 7-98
Ch2 Heater Burnout Detection Current						11 hex		
Ch3 Heater Burnout Detection Current						21 hex		
Ch4 Heater Burnout Detection Current						31 hex		
Ch1 SSR Failure Detection Current	Sets the current to detect SSR failure. A SSR failure detection is output when the leakage current value exceeds the setting of this parameter. When the set value is "50", the "SSR Failure Detection" bit of "Ch□ Output and Alarm Status" turns OFF. When the set value is "0", the "SSR Failure Detection" bit turns ON.	50	0 to 50	A	500D hex	02 hex	Immediately	*7-7-3 SSR Failure Detection* on page 7-101
Ch2 SSR Failure Detection Current						12 hex		
Ch3 SSR Failure Detection Current						22 hex		
Ch4 SSR Failure Detection Current						32 hex		

Temperature alarms setting parameters

The parameters of temperature alarms are shown in the table below. These setting parameters are available for all models. However, only the Ch 1 and Ch 2 setting items are available for models with two channels (2Ch).

Setting name	Description	Default	Setting range	Unit	Index	Subindex	Update timing	Reference
Ch1 Alarm 1 Type	Set the alarm type in accordance with the alarm operation.	0	0 to 12	---	500E hex	01 hex	After the Unit is restarted	*7-7-4 Temperature Alarm* on page 7-105
Ch2 Alarm 1 Type						11 hex		
Ch3 Alarm 1 Type						21 hex		
Ch4 Alarm 1 Type						31 hex		
Ch1 Alarm 2 Type		0	0 to 12	---	500E hex	02 hex	After the Unit is restarted	*7-7-4 Temperature Alarm* on page 7-105
Ch2 Alarm 2 Type						12 hex		
Ch3 Alarm 2 Type						22 hex		
Ch4 Alarm 2 Type						32 hex		
Ch1 Alarm 1 Hysteresis	Set the hysteresis for whether to detect an alarm when the deviation or measured value exceeds the alarm value or alarm value upper and lower limit set in accordance with the alarm type.	2	1 to 9999	0.1°C or 0.1°F	500E hex	03 hex	After the Unit is restarted	*7-7-4 Temperature Alarm* on page 7-105
Ch2 Alarm 1 Hysteresis						13 hex		
Ch3 Alarm 1 Hysteresis						23 hex		
Ch4 Alarm 1 Hysteresis						33 hex		
Ch1 Alarm 2 Hysteresis		2	1 to 9999	0.1°C or 0.1°F	500E hex	04 hex	After the Unit is restarted	*7-7-4 Temperature Alarm* on page 7-105
Ch2 Alarm 2 Hysteresis						14 hex		
Ch3 Alarm 2 Hysteresis						24 hex		
Ch4 Alarm 2 Hysteresis						34 hex		

Parameters for limiting simultaneous outputs

The parameters for limiting simultaneous outputs are shown in the table below. The setting parameters are provided for voltage output for driving SSR in standard control type models.

Setting name	Description	Default	Setting range	Unit	Index	Subindex	Update timing	Reference
Maximum Number of Simultaneous Outputs	Set this item to restrict the peak current of entire actuator connected to the output terminals of the Temperature Control Unit. 0: No restriction 1: 3 Output 2: 2 Output 3: 1 Output (No simultaneous ON)	0	0/1/2/3	---	500F hex	01 hex	After the Unit is restarted	*7-6-4 Limiting Simultaneous Outputs* on page 7-91
Delay between Outputs	This is enabled when the Maximum Number of Simultaneous Outputs setting is other than "No restriction". Set to add an OFF section between the outputs.	10	0 to 1000	ms	500F hex	02 hex	After the Unit is restarted	*7-6-4 Limiting Simultaneous Outputs* on page 7-91

7

Functions

This section describes the Temperature Control Unit functions.

7-1 Function Block Diagram 7-3
7-1-1 Input Function Block Diagram 7-4
7-1-2 Control Processing Function Block Diagram 7-5
7-1-3 Tuning Function Block Diagram 7-6
7-1-4 Control Output Function Block Diagram 7-7
7-1-5 Error Detection Function Block Diagram 7-8

7-2 Selecting Channel to Use 7-9

7-3 Input Function 7-11
7-3-1 Input Type Settings 7-11
7-3-2 Temperature Unit (°C/°F) Setting 7-13
7-3-3 Decimal Point Position Setting 7-15
7-3-4 Cold Junction Compensation Enable/Disable 7-17
7-3-5 Temperature Input Correction 7-19
7-3-6 Input Digital Filter 7-22
7-3-7 Measuring the Ambient Temperature around Terminals 7-24

7-4 Control Processing 7-25
7-4-1 ON/OFF control 7-25
7-4-2 PID control 7-28
7-4-3 Heating and Cooling Control 7-32
7-4-4 Run or Stop Controls 7-37
7-4-5 Direct and Reverse Operation 7-38
7-4-6 Manual MV 7-40
7-4-7 MV at Error 7-42
7-4-8 MV limit 7-44
7-4-9 Load Rejection MV 7-46
7-4-10 MV Branch 7-48
7-4-11 Load-short circuit protection 7-56

7-5 Tuning 7-57
7-5-1 Autotuning (AT) 7-57
7-5-2 Automatic Filter Adjustment 7-60
7-5-3 Water Cooling Output Adjustment Function 7-66
7-5-4 Adaptive control 7-71
7-5-5 Notifying the Update of Tuning Parameters 7-85

7-6 Control Output Functions 7-87
7-6-1 Control Period 7-87
7-6-2 Minimum Output ON/OFF Band 7-89
7-6-3 Output Signal Range Setting 7-90
7-6-4 Limiting Simultaneous Outputs 7-91
7-7 Error Detection 7-97
7-7-1 Sensor Disconnection Detection 7-97
7-7-2 Heater Burnout Detection 7-98
7-7-3 SSR Failure Detection 7-101
7-7-4 Temperature Alarm 7-105
7-7-5 LBA (Loop Burnout Alarm) 7-111

7-1 Function Block Diagram

This section shows an overall view of the functional blocks of the Temperature Control Unit.

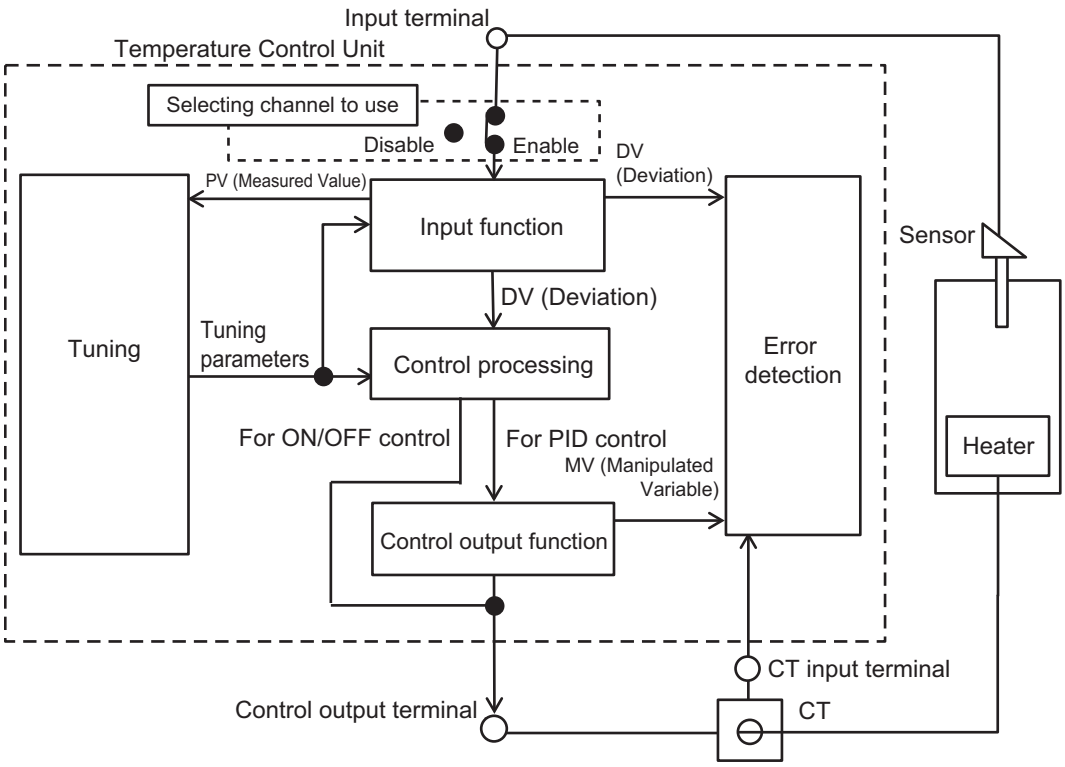

The details of each block are described below.

7-1-1 Input Function Block Diagram

A block diagram of the input functions is shown below.

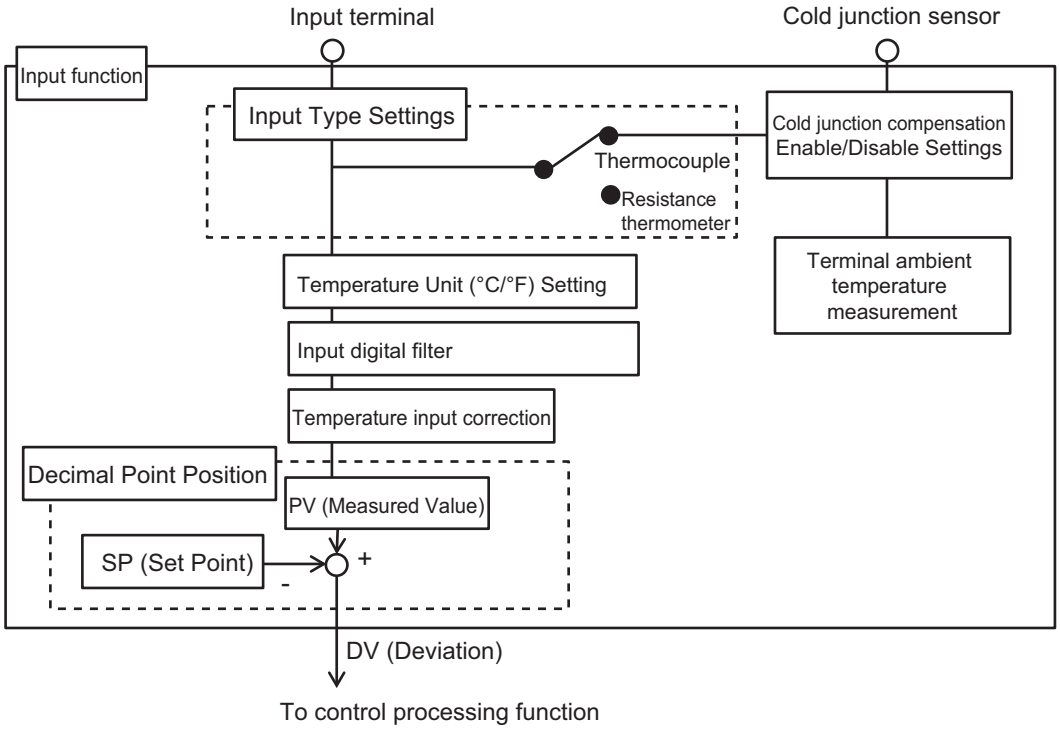

7-1-2 Control Processing Function Block Diagram

A block diagram of the control processing functions is shown below.

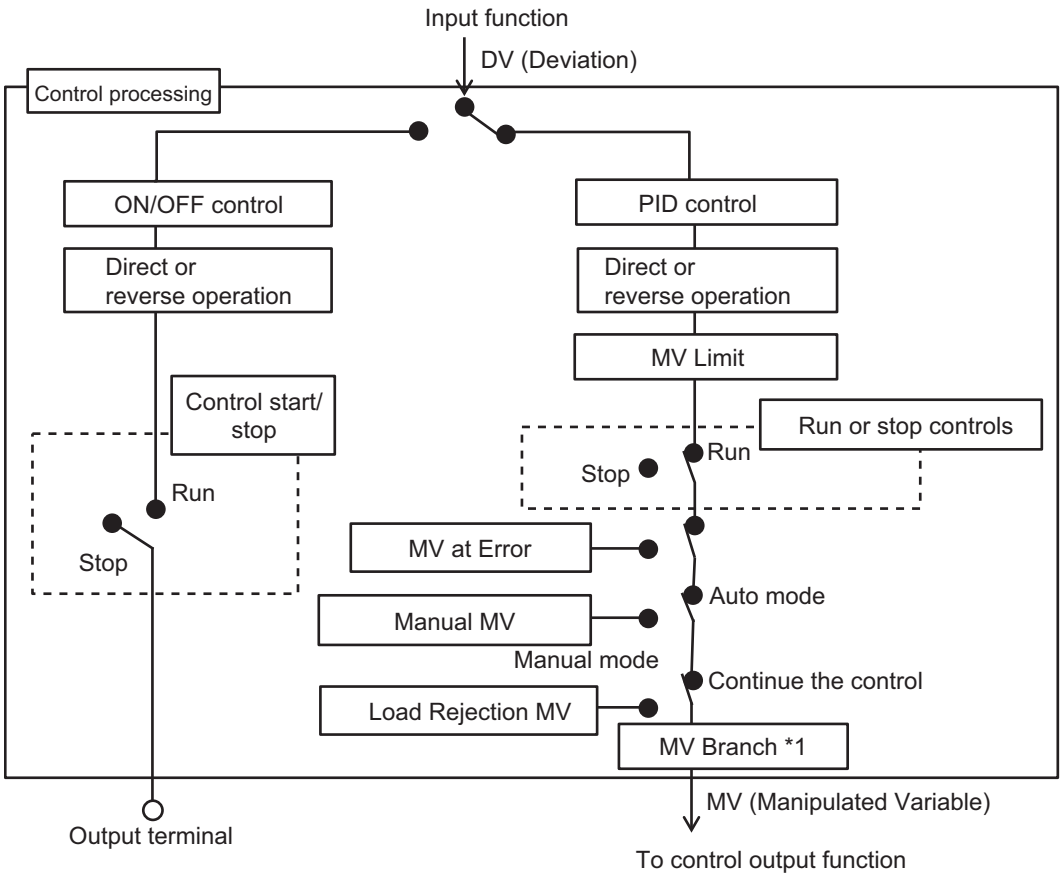

*1. For the detailed block diagram, refer to *7-4-10 MV Branch* on page 7-48.

7-1-3 Tuning Function Block Diagram

Block diagrams of the tuning functions are shown below. The tuning functions differ according to the control type of the Temperature Control Unit.

The tuning functions for each control type are shown below.

● standard control

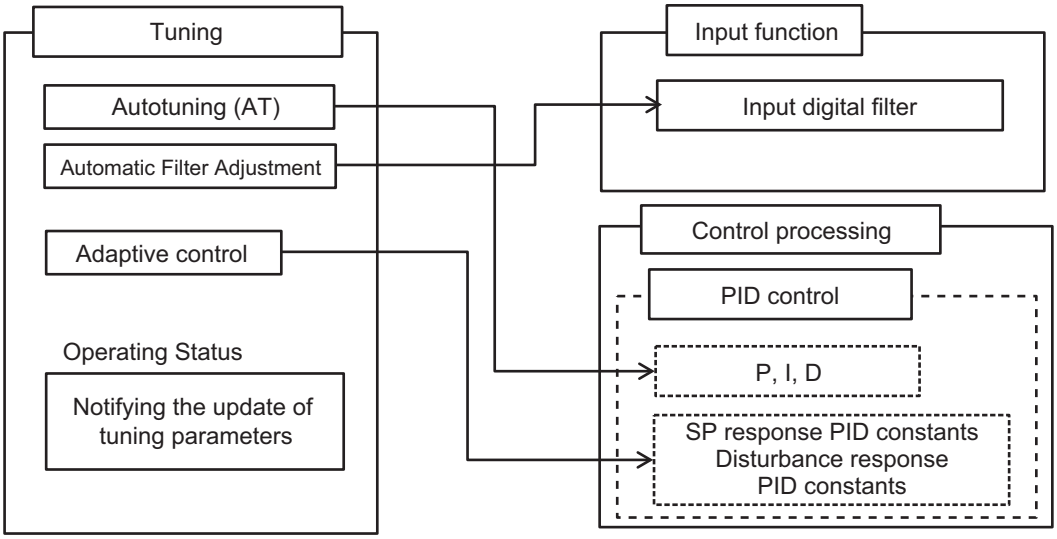

● heating and cooling control

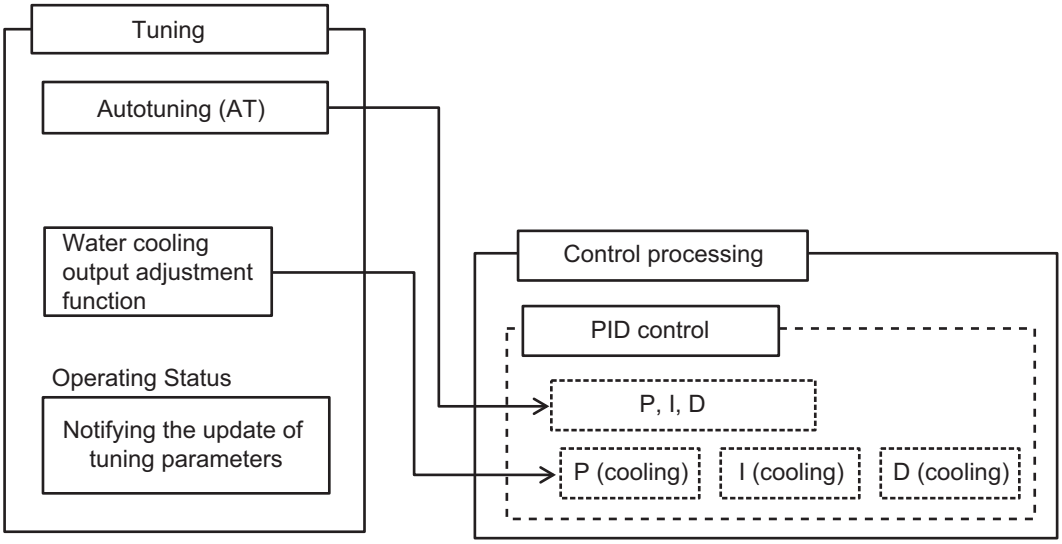

7-1-4 Control Output Function Block Diagram

Block diagrams of the control output functions are shown below. The control output functions differ according to the output type of the Temperature Control Unit.

The control output functions for each Unit output type are shown below.

● Voltage output for driving SSR type

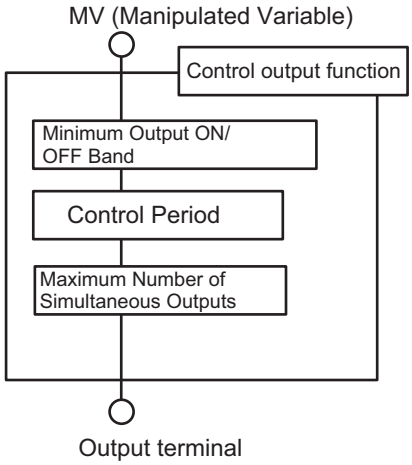

● Linear current output type

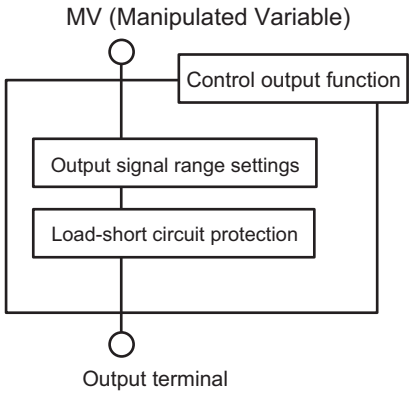

7-1-5 Error Detection Function Block Diagram

Block diagrams of the error detection functions are shown below. Only the error detection functions related to sensor and CT connections are shown. The supported error detection functions differ according to whether a CT input exists.

● With CT input

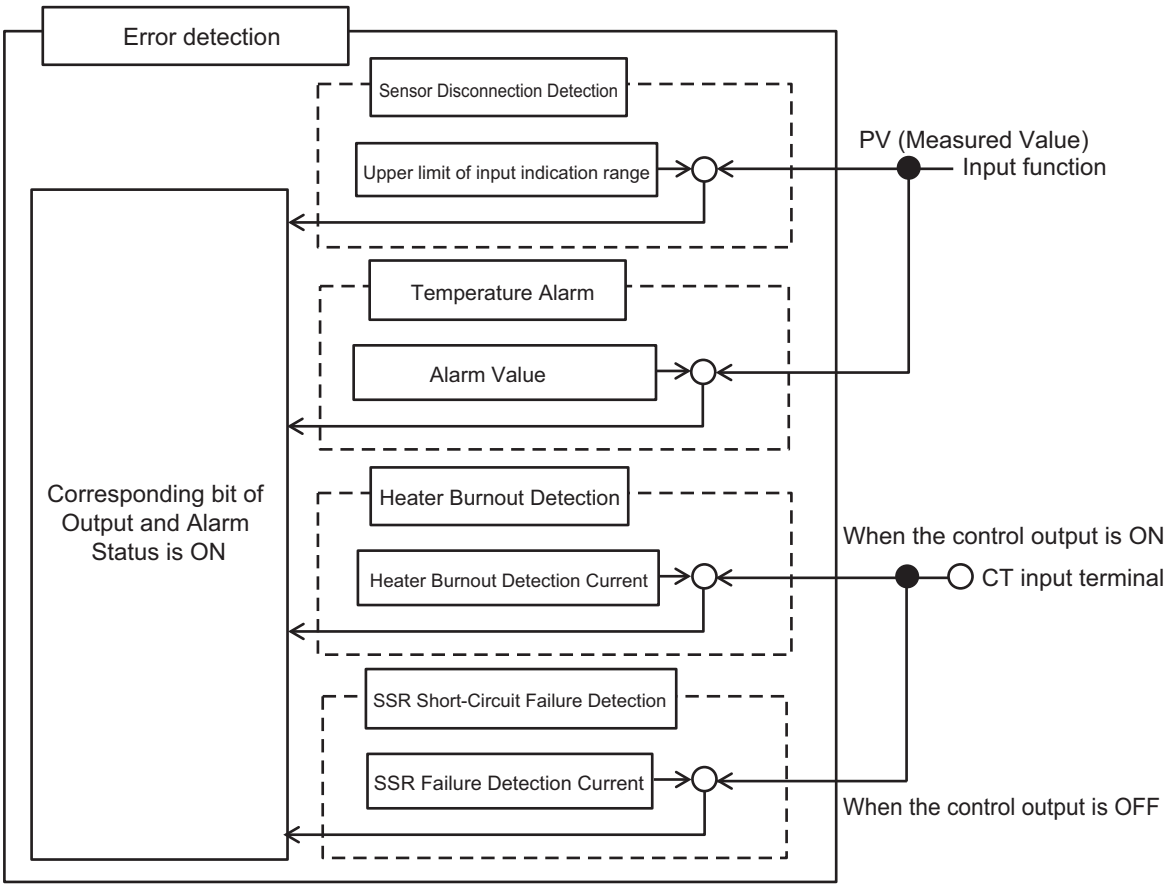

● Without CT input

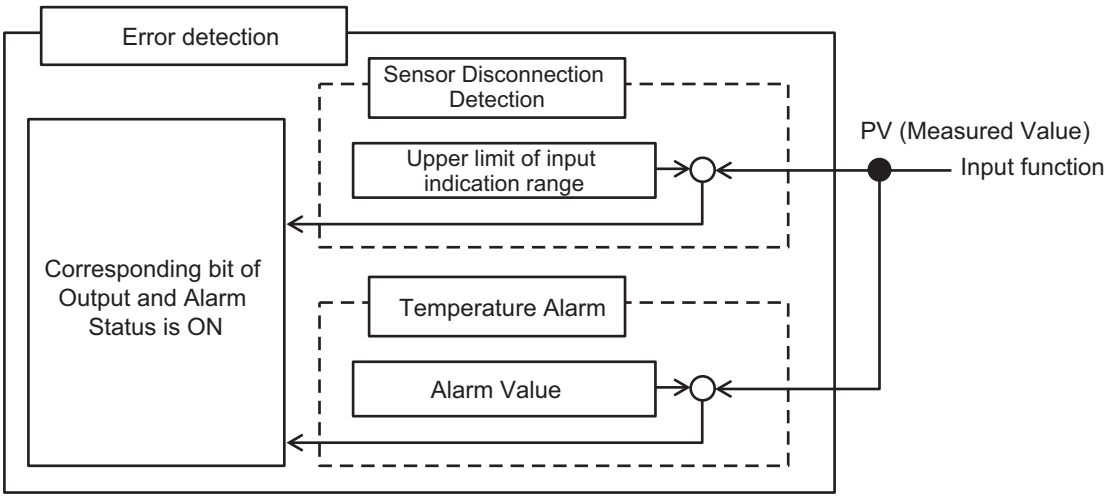

7-2 Selecting Channel to Use

This section describes how to select the channels to use.

Purpose

This function is used to avoid errors in unused channels.

Details on the Function

Control processing, error detection, and output processing are disabled for unused channels.

However, the conversion time of its own Unit will not be shortened even if the channels are disabled.

● Item

The settings are shown in the following table.

Setting name*1	Support Software display	Description	Default	Setting range	Unit	Update timing
Ch□ Enable/Disable	Ch□ Enable/Disable	Sets the corresponding channel to enabled or disabled. FALSE: Disable TRUE: Enable	TRUE	TRUE or FALSE	---	After the Unit is restarted

*1. □ indicates the channel number.

● Measured value and status of disabled channels

The measured value and status of channels set to "Disable" are fixed to 0 after the power is turned ON again or the Unit is restarted. And the output is fixed to "OFF".

The I/O data that are fixed to 0 are as follows.

- operating status
- output and alarm status
- measured value
- MV Monitor
- heater current
- leakage current

Target NX Units

All Temperature Control Units

Setting Method

This section gives the setting method with the Sysmac Studio.

Even when using Support Software other than Sysmac Studio, set the parameters described in the procedure on the editing screen for the Unit operation settings and transfer them to the NX Units.

For details about displaying the editing screen for the Unit operation settings when using Support Software other than Sysmac Studio and how to transfer the settings to the NX Units, refer to the operation manual for the Support Software that you are using.

1 Display the Edit Unit Operation Settings Tab Page.

For the display methods, refer to *A-8 Displaying the Edit Unit Operation Settings Tab Page* on page A-129.

2 Select *True* (Enable) or *False* (Disable) from the list of Channel Enable/Disable Setting for the channel you want to set.

Refer to *A-9 Edit Unit Operation Settings Tab Page* on page A-132 for details about the editing screen for the Unit operation settings.

3 Click the Transfer to Unit Button.

The settings are transferred from the Sysmac Studio to the NX Unit.

The settings are reflected after the Unit is restarted.

Precautions for Safe Use

After using the Support Software to change Unit Operation Setting parameters that are applied when the Unit is restarted and transferring them to the Unit, the Unit is restarted after the transfer is completed. Always sufficiently check the safety of the connected devices before transferring the Unit operation settings.

7-3 Input Function

This section describes the input functions.

7-3-1 Input Type Settings

Overview and Purpose

Sets the input type of the sensor connected to the temperature input.

Details on the Function

● Settable input types and setting items

The settable input types and setting items are listed below. The input setting range is the range where the set point can be set. The input indication range is the range where the measured values can be measured.

Setting name*1	Support Software display	Description	Default	Setting range	Unit	Update timing
Ch☐ Input Type	Ch☐ Input Type	Sets the input type of the sensor connected to the temperature input.	5: -200 to 1300°C/ -300 to 2300°F	*2	---	After the Unit is restarted

*1. ☐ indicates the Ch number.

*2. The setting ranges are shown below.

Set values	Input Type		Input indication range	remarks
	Sensor	Input setting range		
0	Pt100	-200 to 850°C/-300 to 1500°F	-220 to 870°C/-340 to 1540°F	resistance thermometer
1	Pt100	-199.9 to 500.0°C/-199.9 to 900.0°F	-219.9 to 520.0°C/-239.9 to 940.0°F	
2	Pt100	-0.0 to 100.0°C/0.0 to 210.0°F	-20.0 to 120.0°C/-40.0 to 250.0°F	
3	JPt100	-199.9 to 500.0°C/-199.9 to 900.0°F	-219.9 to 520.0°C/-239.9 to 940.0°F	
4	JPt100	-0.0 to 100.0°C/0.0 to 210.0°F	-20.0 to 120.0°C/-40.0 to to250.0°F	
5	K	-200 to 1300°C/-300 to 2300°F	-220 to 1320°C/-340 to 2340°F	thermocouple
6	K	-20.0 to 500.0°C/0.0 to 900.0°F	-40.0 to 520.0°C/-40.0 to 940.0°F	
7	J	-100 to 850°C/-100.0 to 1500°F	-120 to 870°C/-140 to 1540°F	
8	J	-20.0 to 400.0°C/0.0 to 750.0°F	-40.0 to 420.0°C/-40.0 to 790.0°F	
9	T	-200 to 400°C/-300 to 700°F	-220 to 420°C/-340 to 740°F	
10	T	-199.9 to 400.0°C/-199.9 to 700.0°F	-219.9 to 420.0°C/-239.9 to 740°F	
11	E	-200 to 600°C/-300 to 1100°F	-220 to 620°C/-340 to 1140°F	
12	L	-100 to 850°C/-100 to 1500°F	-120 to 870°C/-140 to 1540°F	
13	U	-200 to 400°C/-300 to 700°F	-220 to 420°C/-340 to 740°F	
14	U	-199.9 to 400.0°C/-199.9 to 700.0°F	-219.9 to 420.0°C/-239.9 to 740°F	
15	N	-200 to 1300°C/-300 to 2300°F	-220 to 1320°C/-340 to 2340°F	
16	R	0 to 1700°C/0 to 3000°F	-20 to 1720°C/-40 to 3040°F	
17	S	0 to 1700°C/0 to 3000°F	-20 to 1720°C/-40 to 3040°F	
18	B	0 to 1800°C/0 to 3200°F	-20 to 1820°C/-40 to 3240°F	
19	C/W	0 to 2300°C/0 to 3200°F	-20 to 2320°C/-40 to 3240°F	
20	PLII	0 to 1300°C/0 to 2300°F	-20 to 1320°C/-40 to 2340°F	

Additional Information

- The decimal point position of INT measured values can be selected from 0°C/°F or 0.1°C/°F. Refer to *7-3-3 Decimal Point Position Setting* on page 7-15.
- To convert the temperature unit from Celsius to Fahrenheit, use the following equation.
  Fahrenheit temperature (°F) = Celsius temperature (°C) x 1.8 + 32
- Regardless of the measured value data type, treat any digits of a measured value that exceed the specified resolution as reference values. The same is true if the data type is an integer type and a large number of digits are set for display with the decimal point position setting.

● Operation when the measured value is outside the input indication range

If the measured value falls outside the input indication range, the "Ch□ Sensor Disconnected Error" bit of "Ch□ Output and Alarm Status" in the I/O data turns ON and the measured value becomes the upper limit value of the input indication range.

Refer to *Output and Alarm Status* on page 6-17 in *6-1-2 Details about Aggregated Data* on page 6-16 for details about the statuses.

● Operation when the input type differs from the connected sensor

Measured values cannot be correctly measured.

Target NX Units

All Temperature Control Units

Setting Method

This section gives the setting method with the Sysmac Studio.

Even when using Support Software other than Sysmac Studio, set the parameters described in the procedure on the editing screen for the Unit operation settings and transfer them to the NX Units.

For details about displaying the editing screen for the Unit operation settings when using Support Software other than Sysmac Studio and how to transfer the settings to the NX Units, refer to the operation manual for the Support Software that you are using.

1 Display the Edit Unit Operation Settings Tab Page.
For the display methods, refer to *A-8 Displaying the Edit Unit Operation Settings Tab Page* on page A-129.

2 Select the input type from the list of Input Type Setting for the channel you want to set.
Refer to *A-9 Edit Unit Operation Settings Tab Page* on page A-132 for details about the editing method for the Unit operation settings.

3 Click the Transfer to Unit Button.
The settings are transferred from the Sysmac Studio to the NX Unit.

The settings are reflected after the Unit is restarted.

Precautions for Safe Use

After using the Support Software to change Unit Operation Setting parameters that are applied when the Unit is restarted and transferring them to the Unit, the Unit is restarted after the transfer is completed. Always sufficiently check the safety of the connected devices before transferring the Unit operation settings.

7-3-2 Temperature Unit (°C/°F) Setting

Overview and Purpose

This function sets °C (celsius) or °F (fahrenheit) as the temperature unit for measured values.

Details on the Function

The set temperature unit is applied to parameters with temperature units, such as measured values and set points. The relational expression between °C (Celsius) and °F (Fahrenheit) is shown below.

Measured value (°F) = Measured value (°C) x 1.8 + 32

Set parameters with temperature units, such as set points, to match the set temperature unit.

The Temperature Control Unit does consider the temperature units when performing numerical conversion.

● Item

The settings are shown in the following table.

Setting name*1	Support Software display	Description	Default	Setting range	Unit	Update timing
Ch☐ Temperature Unit	Ch☐ Temperature Unit	Sets °C (Celsius) or °F (Fahrenheit) as the temperature unit for measured values and set points. 0: °C 1: ° F	0	0/1	---	After the Unit is restarted

*1. ☐ indicates the Ch number.

Target NX Units

All Temperature Control Units

Setting Method

This section gives the setting method with the Sysmac Studio.

Even when using Support Software other than Sysmac Studio, set the parameters described in the procedure on the editing screen for the Unit operation settings and transfer them to the NX Units.

For details about displaying the editing screen for the Unit operation settings when using Support Software other than Sysmac Studio and how to transfer the settings to the NX Units, refer to the operation manual for the Support Software that you are using.

1 Display the Edit Unit Operation Settings Tab Page.

For the display methods, refer to *A-8 Displaying the Edit Unit Operation Settings Tab Page* on page A-129.

2 Select *[°C]* or *[°F]* from the list of Temperature Unit Setting for the channel you want to set.

Refer to *A-9 Edit Unit Operation Settings Tab Page* on page A-132 for details about the editing method for the Unit operation settings.

3 Click the Transfer to Unit Button.

The settings are transferred from the Sysmac Studio to the NX Unit.
The settings are reflected after the Unit is restarted.

Precautions for Safe Use

After using the Support Software to change Unit Operation Setting parameters that are applied when the Unit is restarted and transferring them to the Unit, the Unit is restarted after the transfer is completed. Always sufficiently check the safety of the connected devices before transferring the Unit operation settings.

7-3-3 Decimal Point Position Setting

Overview and Purpose

For INT-type measured values and INT-type set point parameters, you can the number of display digits after the decimal point.

This function reduces the number of engineering changes related to the decimal point position when the Controller handles the decimal point position of the measured value or the set point as fixed position or when replacement is performed from another company's temperature control Unit.

Details on the Function

It is used as the decimal point position for INT-type measured values and INT-type set points.

● Item

The settings are shown in the following table.

Setting name*1	Support Software display	Description	Default	Setting range	Unit	Update timing
Ch□ Decimal Point	Ch□ Decimal Point	Sets the decimal point position for INT-type measured values and INT-type set points. 0: No decimal point 1: 1 decimal place 2: Follow decimal point position of input type	2	0/1/2	---	After the Unit is restarted

*1. □ indicates the Ch number.

When "Follow decimal point position of input type" is selected, the decimal point position of the input type is adopted without changing the values of the parameters. If the setting differs from the decimal point position determined by the input type when "No decimal point" or "1 decimal place" is selected, the parameter values are converted according to the set decimal point position.

Some operation examples are shown below.

Set point	Set decimal point position	Set input type	Set point used for control processing by the Temperature Control Unit
1234	1: 1 decimal place	5: K -200 to 1300°C No decimal point	123°C*1
1235	1: 1 decimal place	5: K -200 to 1300°C No decimal point	124°C*1
123	0: No decimal point	6: K -20.0 to 500.0°C 1 decimal place	123.0°C
1234	0: No decimal point	6: K -20.0 to 500.0°C 1 decimal place	500.0°C*2
123	0: No decimal point	5: K -200 to 1300°C No decimal point	123°C

*1. First decimal place of a converted value is round off.

*2. As 1,234.0°C exceeds the 500.0°C upper limit of the input setting range, it is restricted to the upper limit.

Target NX Units

All Temperature Control Units

Setting Method

This section gives the setting method with the Sysmac Studio.

Even when using Support Software other than Sysmac Studio, set the parameters described in the procedure on the editing screen for the Unit operation settings and transfer them to the NX Units.

For details about displaying the editing screen for the Unit operation settings when using Support Software other than Sysmac Studio and how to transfer the settings to the NX Units, refer to the operation manual for the Support Software that you are using.

1 Display the Edit Unit Operation Settings Tab Page.

For the display methods, refer to *A-8 Displaying the Edit Unit Operation Settings Tab Page* on page A-129.

2 Select the decimal point position from the list of Decimal Point Position Setting for the channel you want to set.

Refer to *A-9 Edit Unit Operation Settings Tab Page* on page A-132 for details about the editing method for the Unit operation settings.

3 Click the Transfer to Unit Button.

The settings are transferred from the Sysmac Studio to the NX Unit.

The settings are reflected after the Unit is restarted.

Precautions for Safe Use

After using the Support Software to change Unit Operation Setting parameters that are applied when the Unit is restarted and transferring them to the Unit, the Unit is restarted after the transfer is completed. Always sufficiently check the safety of the connected devices before transferring the Unit operation settings.

7-3-4 Cold Junction Compensation Enable/Disable

Overview and Purpose

This function enables or disables the cold junction compensation using cold junction sensors that are mounted on terminal blocks, when a thermocouple input is used.

Enable this function normally.

Regardless of the cold junction compensation enable/disable setting, do not remove the cold junction sensors that are mounted on the terminal blocks when they are delivered.

Precautions for Safe Use

- Do not remove the cold junction sensors when you use the Unit. If the cold junction sensors are removed from the Unit, you cannot measure the temperature correctly regardless of the cold junction compensation enable/disable setting.
- Use the cold junction sensors that have been mounted at the time of delivery. The Temperature Control Unit and its connection circuits are independently calibrated by the provided cold junction sensors. Therefore, if you use the cold junction sensors for another Unit or replace two or more cold junction sensors for each Unit, the temperature cannot be measured correctly.

Details on the Function

● If Cold Junction Compensation is Enabled

The measured value is the value with cold junction compensation using the cold junction sensor that is mounted on the terminal block.

● If Cold Junction Compensation is Disabled

The measured value is the value without the cold junction compensation using the cold junction sensor that is mounted on the terminal block.

● Item

The settings are shown in the following table.

Setting name*1	Support Software display	Description	Default	Setting range	Unit	Update timing
Ch□ Cold Junction Compensation Enable/Disable	Ch□ Cold Junction Compensation Enable/Disable	Set to enable or disable cold junction compensation for the thermocouple input. FALSE: Disable TRUE: Enable	TRUE	TRUE or FALSE	---	After the Unit is restarted

*1. □ indicates the Ch number.

● Cold Junction Sensor Error Detected

- If a cold junction sensor is disconnected, the measured value will be the upper limit value of the input indication range. At this time, the Ch□ Cold Junction Error bit in the Ch□ Output and Alarm Status will turn ON, and a Cold Junction Sensor Error (event code: 05110000 hex) will occur.

- When the cause of the cold junction sensor error is removed, the value becomes the normal measured value. When the cause of the error is removed and the error is reset, the "Ch□ Cold Junction Sensor Error" bit of the "Ch□ Output and Alarm Status" will turn OFF.
- Refer to *Output and Alarm Status* on page 6-17 in *6-1-2 Details about Aggregated Data* on page 6-16 for details about the statuses.
- Refer to *8-3-3 Event Codes and Corrections for Errors* on page 8-7 for details on events.

Target NX Units

All Temperature Control Units

Setting Method

This section gives the setting method with the Sysmac Studio.

Even when using Support Software other than Sysmac Studio, set the parameters described in the procedure on the editing screen for the Unit operation settings and transfer them to the NX Units.

For details about displaying the editing screen for the Unit operation settings when using Support Software other than Sysmac Studio and how to transfer the settings to the NX Units, refer to the operation manual for the Support Software that you are using.

1 Display the Edit Unit Operation Settings Tab Page.

For the display methods, refer to *A-8 Displaying the Edit Unit Operation Settings Tab Page* on page A-129.

2 Select *True* (Enable) or *False* (Disable) from the list of Cold Junction Compensation Enable/Disable Setting for the channel you want to set.

Refer to *A-9 Edit Unit Operation Settings Tab Page* on page A-132 for details about the editing method for the Unit operation settings.

3 Click the Transfer to Unit Button.

The settings are transferred from the Sysmac Studio to the NX Unit.

The settings are reflected after the Unit is restarted.

Precautions for Safe Use

After using the Support Software to change Unit Operation Setting parameters that are applied when the Unit is restarted and transferring them to the Unit, the Unit is restarted after the transfer is completed. Always sufficiently check the safety of the connected devices before transferring the Unit operation settings.

7-3-5 Temperature Input Correction

Purpose

This function corrects measured values.

It is used when there is a noticeable variation among values given from multiple sensors or from values measured with other gauges.

Details on the Function

One-point correction and two-point correction methods are provided.

● One-point Correction

For all points in the sensor's measurement range, measured values are shifted for the value set in the PV Input Shift.

For example, if you want to increase the measured values by 1.2°C, set the PV Input Shift to 1.2. Then the measured values are increased by 1.2°C at all measured points in the measurement range.

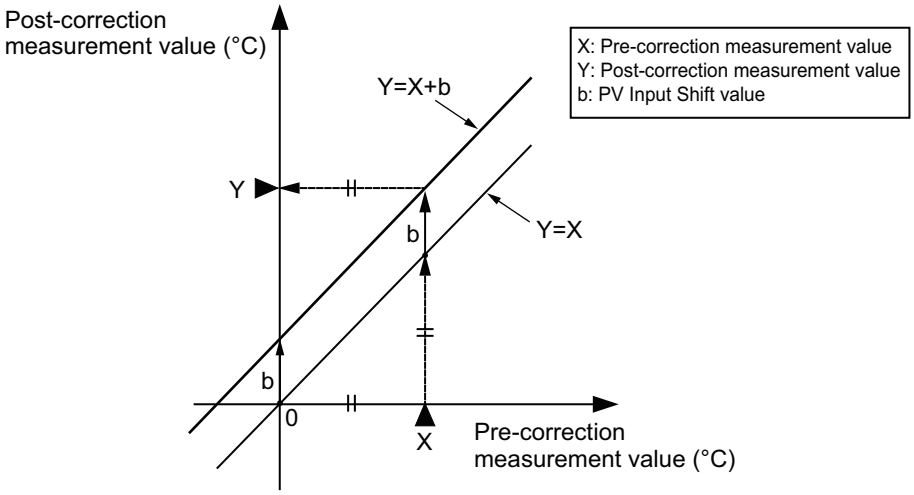

Two-point Correction

This method sets a slop with 0°C or 0°F as the origin, and shifts the measured values for the value in the PV Input Shift.

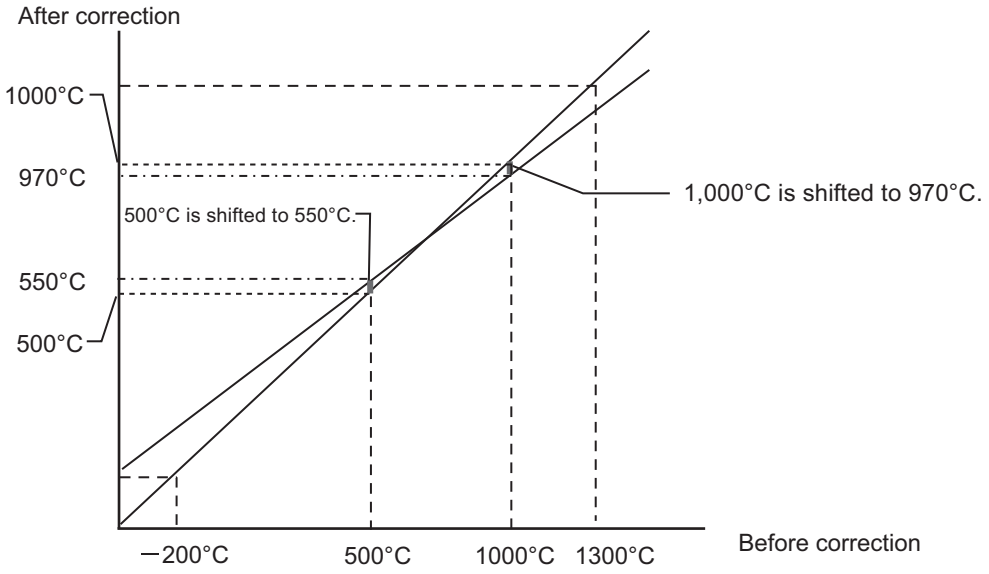

The 2-point correction method is shown below.

1 Extract measured value at two points before correction and define the measured value for each point after correction.

The example below shows the procedure.

Measured value before correction (°C)	Measured value after correction (°C)
500	550
1000	970

2 Calculate the correction coefficient of the PV input slope.

(970°C - 550°C) / (1000°C - 500°C) = 0.840

At this time, do not set the PV Input Slope Coefficient in the Temperature Control Unit.

3 Input the measured value before correction in the Temperature Control Unit.

In this example, assume that 500°C was entered.

4 Set the value calculated at step 2 as the PV Input Slope Coefficient.

5 Read the measured value.

In this example, assume that 420°C was read.

6 Calculate the difference between the corrected measured value determined at step 1 and the measured value at step 5.

(550°C - 420°C) = 130°C

7 Set the value calculated at step 6 as the PV Input Shift.

Item

The settings are shown in the following table.

Setting name*1	Support Software display	Description	Default	Setting range	Unit	Update timing
Ch□ PV Input Shift*2	Ch□ PV Input Shift	Set the value for offset correction of the measured value.	0	-1999 to 9999	0.1°C or 0.1°F	Immediately
Ch□ PV Input Slope Coefficient*2	Ch□ PV Input Slope Coefficient	Select the correction coefficient to correct the slope of the measured value.	1000	1 to 9999	0.001	Immediately

*1. □ indicates the Ch number.

*2. This parameter can be accessed from the I/O data as well. Refer to *6-1-4 Method of Accessing the I/O Data for Adjustment* on page 6-31 for details.

Precautions When You Change Set Values

When adjusting the set value of the setting item whose update timing is "Immediately" in the actual system, change this set value only and transfer it to the Unit.

Note that a restart is required after changing the set value of a setting item whose update timing is "After the Unit is restarted" and transferring it to the Unit.

Target NX Units

All Temperature Control Units

Setting Method

This section gives the setting method with the Sysmac Studio.

Even when using Support Software other than Sysmac Studio, set the parameters described in the procedure on the editing screen for the Unit operation settings and transfer them to the NX Units.

For details about displaying the editing screen for the Unit operation settings when using Support Software other than Sysmac Studio and how to transfer the settings to the NX Units, refer to the operation manual for the Support Software that you are using.

1 Display the Edit Unit Operation Settings Tab Page.

For the display methods, refer to *A-8 Displaying the Edit Unit Operation Settings Tab Page* on page A-129.

2 Enter set values in the [PV Input Shift] and [PV Input Slope Coefficient] text boxes for the channel (Ch□) you want to set.

Refer to *A-9 Edit Unit Operation Settings Tab Page* on page A-132 for details about the editing method for the Unit operation settings.

3 Click the Transfer to Unit Button.

The settings are transferred from the Sysmac Studio to the NX Unit.

The changed settings are applied immediately.

Additional Information

It is not necessary to restart an NX Unit after changing the parameters.

7-3-6 Input Digital Filter

Overview and Purpose

Sets a time constant applied to the filter of the primary delay calculation in order to eliminate the noise component of the measured value.

Details on the Function

If the Input Digital Filter parameter is set to any value other than "0.0", it functions as a low-pass filter to reduce high-frequency noise.

The automatic filter adjustment function can be used to automatically set the input digital filter. Refer to *7-5-2 Automatic Filter Adjustment* on page 7-60 for information on the automatic filter adjustment function.

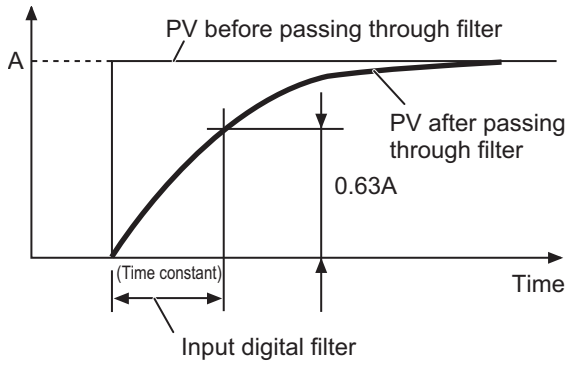

● Item

The settings are shown in the following table.

Setting name*1	Support Software display	Description	Default	Setting range	Unit	Update timing
Ch□ Input Digital Filter*2	Ch□ Input Digital Filter	Sets the time constant for the input digital filter.	0	0 to 9999	0.1 s	Immediately

*1. □ indicates the Ch number.

*2. This parameter can be accessed from the I/O data as well. Refer to *6-1-4 Method of Accessing the I/O Data for Adjustment* on page 6-31 for details.

● Precautions When You Change Set Values

When adjusting the set value of the setting item whose update timing is "Immediately" in the actual system, change this set value only and transfer it to the Unit.

Note that a restart is required after changing the set value of a setting item whose update timing is "After the Unit is restarted" and transferring it to the Unit.

Target NX Units

All Temperature Control Units

Setting Method

This section gives the setting method with the Sysmac Studio.

Even when using Support Software other than Sysmac Studio, set the parameters described in the procedure on the editing screen for the Unit operation settings and transfer them to the NX Units.

For details about displaying the editing screen for the Unit operation settings when using Support Software other than Sysmac Studio and how to transfer the settings to the NX Units, refer to the operation manual for the Support Software that you are using.

1 Display the Edit Unit Operation Settings Tab Page.

For the display methods, refer to *A-8 Displaying the Edit Unit Operation Settings Tab Page* on page A-129.

2 Enter a set value in the [Input Digital Filter] text box for the channel (Ch□) you want to set.

Refer to *A-9 Edit Unit Operation Settings Tab Page* on page A-132 for details about the editing method for the Unit operation settings.

3 Click the Transfer to Unit Button.

The settings are transferred from the Sysmac Studio to the NX Unit.

The changed settings are applied immediately.

Additional Information

It is not necessary to restart an NX Unit after changing the parameters.

7-3-7 Measuring the Ambient Temperature around Terminals

Overview and Purpose

Measures the ambient temperature at the terminals of the Temperature Control Unit.

You can monitor trends in the ambient temperature of the Temperature Control Unit to monitor abnormalities such as abnormal heat generation in the control panel.

Details on the Function

The temperature calculated from the cold junction sensor (CJ1) attached to the Temperature Control Unit is treated as the ambient temperature of the terminals.

The measured ambient temperature around the terminals can be confirmed from the following I/O data. However, the following I/O data is not registered by default. Add this I/O entry to the I/O entry mapping.

For details, refer to *6-1-1 Allocatable I/O Data* on page 6-2.

Data name	Support Software display	Description	Default	Measurement range	Unit
Ambient Temperature	Ambient Temperature	Measures the ambient temperature at the terminals.	---	-30 to 75°C 10 to 171°F	°C or °F

The temperature unit of the ambient temperature follows the "Ch1 Temperature Unit" setting, regardless of the "Ch1 Enable/Disable" setting.

● Operation when the ambient temperature is outside the measurement range

If the ambient temperature is outside the measurement range, an ambient temperature error is detected and the "Ambient Temperature Error" bit in "Unit Status" of the I/O data is turned ON.

Refer to *Unit Status* on page 6-16 in *6-1-2 Details about Aggregated Data* on page 6-16 for details about the statuses.

Additional Information

The reference data for the ambient temperature measurement accuracy is shown below. This data is not a guaranteed value. This value is for a case of upright installation when the adjacent Units are Temperature Control Units. In other installation conditions, the value may increase.

- ±5.0°C

Target NX Units

All Temperature Control Units

Setting Method

No setting is required.

7-4 Control Processing

This section describes the control processing functions of the Temperature Control Unit.

The control processing functions of the Temperature Control Unit can be roughly divided into the following two functions:

- ON/OFF control
- PID control

Calculation functions associated with these controls are described in this section after the description of ON/OFF control and PID control.

7-4-1 ON/OFF control

Overview and Purpose

The ON/OFF control turns OFF the control output when the temperature being controlled reaches a preset set point.

Use ON/OFF control for automatic control where no accuracy is required such as when hunting is tolerated. In the case of heating control[*1], the control output turns OFF when the measured value exceeds the set point and turns ON when the measured value is lower than the set point.

*1. For reverse operation

Details on the Function

When the control output turns OFF, the temperature begins to fall and the control output turns ON again. This operation is repeated over a certain temperature range. At this time, the Hysteresis parameter determines how much the temperature must fall below the set point before the control output turns ON again. Also, the "Direct/Reverse Operation" parameter determines whether the control output increases or decreases in response to an increase or decrease in measured value.

● Hysteresis

With ON/OFF control, hysteresis is used to stabilize operation during ON/OFF switches.
The width of the hysteresis loop determines the sensitivity. The control output (heating) and control output (cooling) functions are set in the Hysteresis (Heating) and Hysteresis (Cooling) parameters, respectively. In standard control, the setting of the Hysteresis (Heating) parameter is used regardless of whether the control type is heating control or cooling control.

Some operation examples are shown below.

a) Standard control type and reverse operation

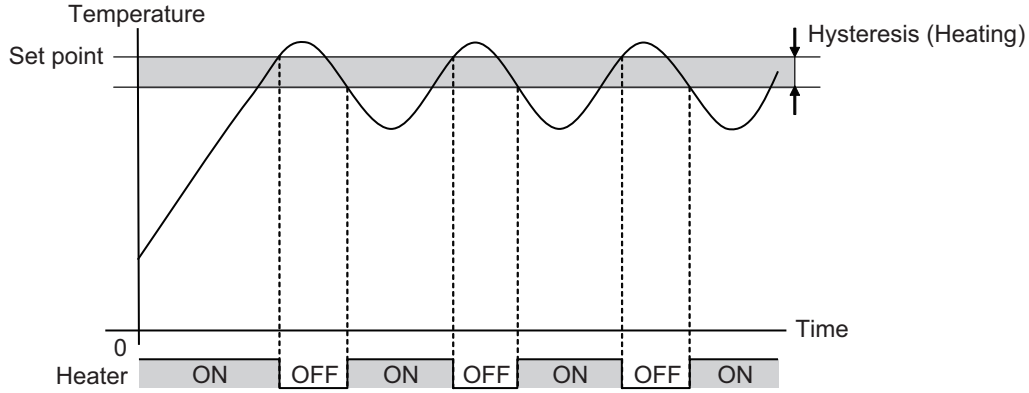

b) Heating/cooling control type

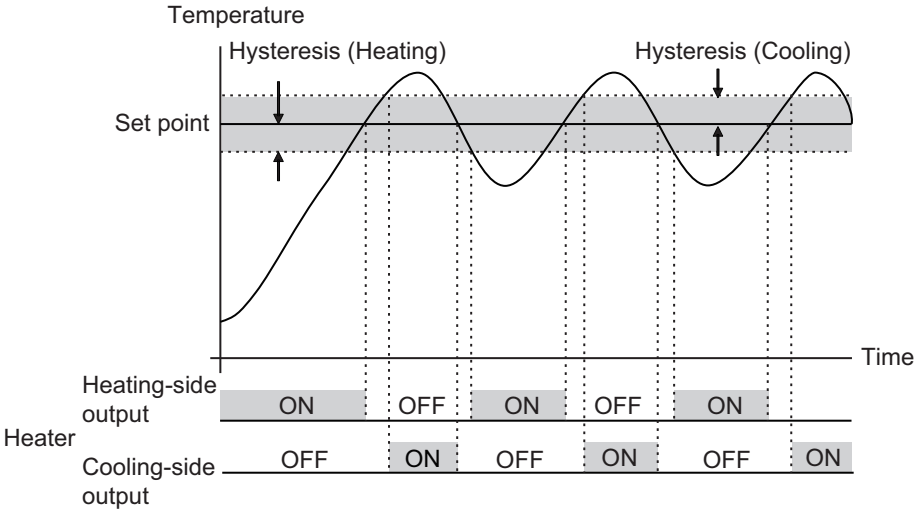

● Item

The settings are shown in the following table.

Setting name*1	Support Software display	Description	Default	Setting range	Unit	Update timing
Ch□ PID ON/OFF	Ch□ PID ON/OFF	Set ON/OFF control or 2-PID control. 0: ON/OFF control 1: 2-PID control	1	0/1	---	After the Unit is restarted
Ch□ Direct/Reverse Operation	Ch□ Direct/Reverse Operation	Sets reverse operation or direct operation. 0: Reverse operation 1: Direct operation Refer to *7-4-5 Direct and Reverse Operation* on page 7-38 for details about this function.	0	0/1	---	After the Unit is restarted
Ch□ Dead Band*2	Ch□ Dead Band	Sets the dead zone to turn OFF the heating and cooling outputs. Refer to *Dead Band* on page 7-32 under *7-4-3 Heating and Cooling Control* on page 7-32 for details.	0	-1999 to 9999	0.1°C or 0.1°F	Immediately
Ch□ Hysteresis (Heating)*3	Ch□ Hysteresis (Heating)	Sets the hysteresis to determine how much the temperature must fall below the set point before heating is started.	10	1 to 9999	0.1°C or 0.1°F	Immediately

Setting name*1	Support Software display	Description	Defa ult	Set-ting range	Unit	Update timing
Ch□ Hyster-esis (Cool-ing)*3	Ch□ Hyster-esis (Cool-ing)	Sets the hysteresis to determine how much the temperature must fall below the set point before cooling is started.	10	1 to 9999	0.1°C or 0.1°F	Immedi-ately

*1. □ indicates the Ch number.

*2. Parameter for the heating/cooling control type only.

*3. This parameter can be accessed from the I/O data as well. Refer to *6-1-4 Method of Accessing the I/O Data for Adjustment* on page 6-31 for details.

● Precautions When You Change Set Values

When adjusting the set value of the setting item whose update timing is "Immediately" in the actual system, change this set value only and transfer it to the Unit.

Note that a restart is required after changing the set value of a setting item whose update timing is "After the Unit is restarted" and transferring it to the Unit.

● Checking the Control Status

With the standard control type, the control output status can be checked using the Heating Control Output bit of Ch□ Output and Alarm Status in the I/O data. With the heating/cooling control type, the control output status can be checked using the Heating Control Output and Cooling Control Output bits of Ch□ Output and Alarm Status in the I/O data.

Refer to *Output and Alarm Status* on page 6-17 in *6-1-2 Details about Aggregated Data* on page 6-16 for details about the statuses.

Target NX Units

All Temperature Control Units

Setting Method

This section gives the setting method with the Sysmac Studio.

Even when using Support Software other than Sysmac Studio, set the parameters described in the procedure on the editing screen for the Unit operation settings and transfer them to the NX Units.

For details about displaying the editing screen for the Unit operation settings when using Support Software other than Sysmac Studio and how to transfer the settings to the NX Units, refer to the operation manual for the Support Software that you are using.

1 Display the Edit Unit Operation Settings Tab Page.

For the display methods, refer to *A-8 Displaying the Edit Unit Operation Settings Tab Page* on page A-129.

2 For settings related to ON/OFF control of the channel being set (Ch□), select a setting item from the dropdown list or enter the set value in the text box.

Refer to *A-9 Edit Unit Operation Settings Tab Page* on page A-132 for details about the editing method for the Unit operation settings.

3 Click the Transfer to Unit Button.

The settings are transferred from the Sysmac Studio to the NX Unit.

The settings below are applied after the Unit is restarted.

- Ch□ PID ON/OFF
- Ch□ Direct/Reverse Operation

The following settings are applied immediately.

- Ch□ Dead Band
- Ch□ Hysteresis (Heating)
- Ch□ Hysteresis (Cooling)

Precautions for Safe Use

After using the Support Software to change Unit Operation Setting parameters that are applied when the Unit is restarted and transferring them to the Unit, the Unit is restarted after the transfer is completed. Always sufficiently check the safety of the connected devices before transferring the Unit operation settings.

7-4-2 PID control

Overview and Purpose

PID control is a combination of proportional (P) control, integral (I) control, and derivative (D) control that feeds back the detected value to the set point and makes them match.

The proportional action performs smooth control with less hunting. The integral action corrects the offset between the set point and the measured value. The derivative action speeds up response to sudden temperature change.

This is used when you want to perform smoother automatic control without generating hunting.

Details on the Function

For PID control, it is necessary to set the setting items for the "Proportional Band", "Integration Time", and "Derivative Time" PID constants.

Use AT (autotuning) or manual setting to set the PID constants.

- If the control characteristics are not known
  By using AT (autotuning), the optimal PID constants are automatically calculated and set.
- If the control characteristics are already known
  Set the PID constants manually and adjust the control.

Refer to *7-5-1 Autotuning (AT)* on page 7-57 for details about AT (autotuning).

Setting the "Integration Time" and "Derivative Time" PID constants to "0" results in proportional operation.

For proportional operation, when the measured value reaches the set point, the manipulated variable will be 50.0%.

Change in measured value when PID constants are changed

The change in measured value when a PID constant is changed manually is shown below.

a) When P (Proportional Band) Is Changed

Change in constant	Change in measured value	
Increased	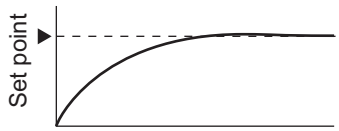	The curve rises gradually, and a long stabilization time is created, but overshooting is prevented.
Decreased	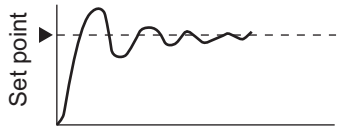	Overshooting and hunting occur, but the set value is quickly reached and the temperature stabilizes.

b) When I (Integral Time) Is Changed

Change in constant	Change in measured value	
Increased	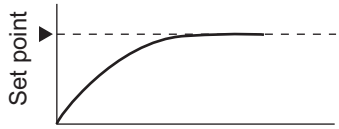	It takes a long time to reach the set point. It takes time to achieve a stable state, but overshooting, undershooting, and hunting are reduced.
Decreased	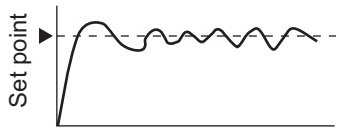	Overshooting and undershooting occur. Hunting occurs. The Unit starts up faster.

c) When D (Derivative Time) Is Changed

Change in constant	Change in measured value	
Increased	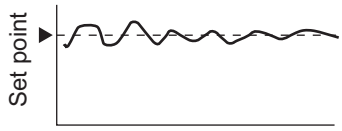	Overshooting, undershooting, and stabilization times are reduced, but fine hunting occurs on changes in the curve itself.
Decreased	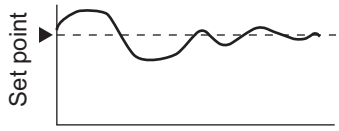	Overshooting and undershooting increase, and it takes time to return to the set point.

Item

The settings are shown in the following table.

Setting name*1	Support Software display	Description	Default	Setting range	Unit	Update timing
Ch□ PID ON/OFF	Ch□ PID ON/OFF	Set ON/OFF control or 2-PID control. 0: ON/OFF control 1: 2-PID control	1	0 to 1	---	After the Unit is restarted
Ch□ Proportional Band*2	Ch□ Proportional Band	Sets the Proportional Band (P) used for 2-PID control. It is used for the heating side for the heating/cooling control type.	80	1 to 9999	0.1°C or 0.1°F	Immediately
Ch□ Integration Time*2	Ch□ Integration Time	Sets the Integration Time (I) used for 2-PID control. It is used for the heating side for the heating/cooling control type.	2330	0 to 39999	0.1 s	Immediately
Ch□ Derivative Time*2	Ch□ Derivative Time	Sets the Derivative Time (D) used for 2-PID control. It is used for the heating side for the heating/cooling control type.	400	0 to 39999	0.1 s	Immediately
Ch□ Proportional Band (Cooling)*2*3	Ch□ Proportional Band (Cooling)	Sets the cooling side Proportional Band (P) used for 2-PID control.	80	1 to 9999	0.1°C or 0.1°F	Immediately
Ch□ Integral Time (Cooling)*2*3	Ch□ Integral Time (Cooling)	Sets the cooling side Integration Time (I) used for 2-PID control.	2330	0 to 39999	0.1 s	Immediately
Ch□ Derivative Time (Cooling)*2*3	Ch□ Derivative Time (Cooling)	Sets the cooling side Integration Time (I) used for 2-PID control.	400	0 to 39999	0.1 s	Immediately

*1. □ indicates the Ch number.

*2. This parameter can be accessed from the I/O data as well. Refer to *6-1-4 Method of Accessing the I/O Data for Adjustment* on page 6-31 for details.

*3. Parameter for the heating/cooling control type only.

● Precautions When You Change Set Values

When adjusting the set value of the setting item whose update timing is "Immediately" in the actual system, change this set value only and transfer it to the Unit.

Note that a restart is required after changing the set value of a setting item whose update timing is "After the Unit is restarted" and transferring it to the Unit.

● Checking the Control Status

With the standard control type, the control output status can be checked using the Heating Control Output bit of Ch□ Output and Alarm Status in the I/O data. In addition, the manipulated variable calculated for PID control can be checked using "Ch□ MV Monitor (Heating)" in the I/O data.

With the heating/cooling control type, the control output status can be checked using the Heating Control Output and Cooling Control Output bits of Ch□ Output and Alarm Status in the I/O data. In addition, the manipulated variables calculated for PID control can be checked using "Ch□ MV Monitor (Heating)" and "Ch□ MV Monitor (Cooling)" in the I/O data.

Refer to *Output and Alarm Status* on page 6-17 in *6-1-2 Details about Aggregated Data* on page 6-16 for details about the statuses.

Refer to *6-1-1 Allocatable I/O Data* on page 6-2 for details about MV Monitor.

Target NX Units

All Temperature Control Units

Setting Method

This section gives the setting method with the Sysmac Studio.

Even when using Support Software other than Sysmac Studio, set the parameters described in the procedure on the editing screen for the Unit operation settings and transfer them to the NX Units.

For details about displaying the editing screen for the Unit operation settings when using Support Software other than Sysmac Studio and how to transfer the settings to the NX Units, refer to the operation manual for the Support Software that you are using.

1 Display the Edit Unit Operation Settings Tab Page.

For the display methods, refer to *A-8 Displaying the Edit Unit Operation Settings Tab Page* on page A-129.

2 For settings related to PID control of the channel being set (Ch□), select a setting item from the dropdown list or enter the set value in the text box.

Refer to *A-9 Edit Unit Operation Settings Tab Page* on page A-132 for details about the editing method for the Unit operation settings.

3 Click the Transfer to Unit Button.

The settings are transferred from the Sysmac Studio to the NX Unit.

The settings below are applied after the Unit is restarted.

- Ch□ PID ON/OFF

The following settings are applied immediately.

- Ch□ Proportional Band
- Ch□ Integration Time
- Ch□ Derivative Time

- Ch□ Proportional Band (Cooling)
- Ch□ Integral Time (Cooling)
- Ch□ Derivative Time (Cooling)

Precautions for Safe Use

After using the Support Software to change Unit Operation Setting parameters that are applied when the Unit is restarted and transferring them to the Unit, the Unit is restarted after the transfer is completed. Always sufficiently check the safety of the connected devices before transferring the Unit operation settings.

7-4-3 Heating and Cooling Control

Overview and Purpose

This function controls both heating and cooling. It is used to control temperature in the systems which are difficult to control with only heating. For one temperature input, temperature control is performed with two outputs, heating and cooling.

This function is provided only by a heating/cooling control type of the Temperature Control Unit.

Details on the Function

"Dead Band" and "Heating/Cooling Tuning Method" can be set with the heating and cooling control type Temperature Control Units.

The PID constant can be set independently on the heating side and cooling side.

The PID constants for heating and cooling are automatically set after you select a tuning method that meets the cooling characteristics in the Heating/Cooling Tuning Method parameter and execute auto-tuning.

In addition, "LCT Cooling Output Minimum ON Time" and "Water-Cooling Output Adjustment" are available for extruders.

These functions are described below.

● Dead Band

"Dead Band" can be used to set the dead zone to turn OFF the heating and cooling outputs.

When you set a negative value to Dead Band, the Temperature Control Unit operates in overlapped dead bands.

If the Unit operates in overlapping band, bumpless function may not work properly for when operation mode is switched between manual and automatic.

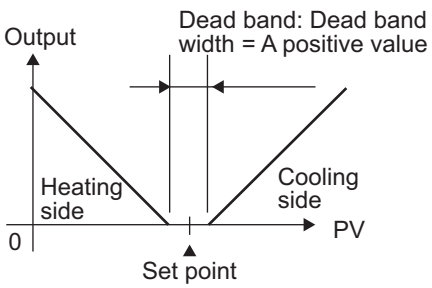

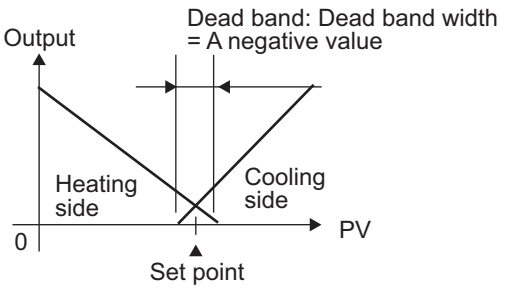

Additional Information

three-position control

Setting the PID ON/OFF parameter to "ON/OFF" control enables three-position control. "Hysteresis" and "Dead Band" can be used to set the dead zone to turn OFF the heating and cooling outputs.

The operation is described below.

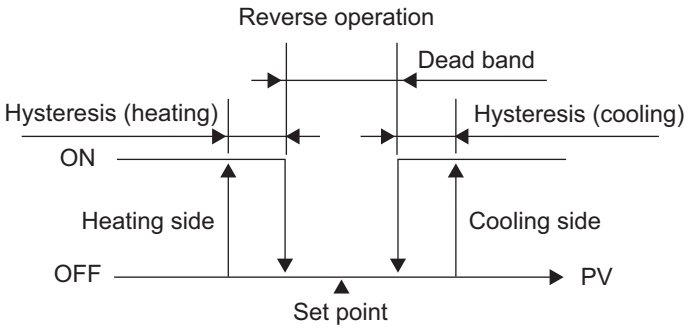

Heating/Cooling Tuning Method

The tuning method can be selected according to the cooling characteristics.

When AT (autotuning) is executed after making this setting, the PID constant is set automatically according to the cooling characteristics.

The "Air cooling" and "Water cooling" settings are for extruders, while "Linear" is for equipment other than extruders. They have the following cooling characteristics.

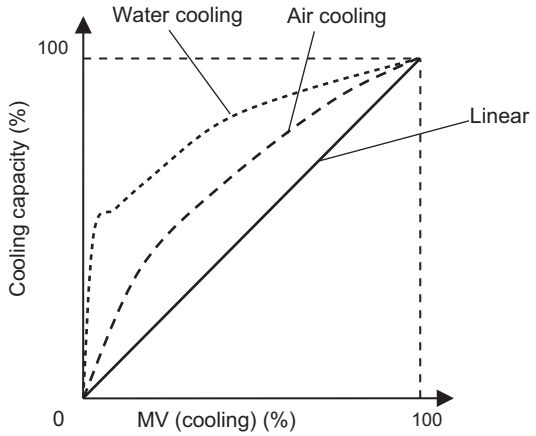

Cooling characteristics

Set values	Description
Same as heating control	Calculates the PID constants with the same tuning method as heating control.
Linear	Performs tuning for an application with linear cooling characteristics and calculates the PID constants.
Air cooling	Performs tuning for an application with non-linear cooling characteristics, such as an extruder that is a plastic molding machine, and calculates the PID constants. This control offers fast and stable response characteristics. Select "Air cooling" or "Water cooling" according to the cooling method of the application. However, if the control temperature is less than 100°C, do not select these methods, but select "Linear" even for an extruder. Also, set "Ch□ Minimum Output ON/OFF Band" to "0" to operate the actuator connected to the output terminal.*1
Water cooling	

*1. For details, refer to *7-6-2 Minimum Output ON/OFF Band* on page 7-89.

LCT Cooling Output Minimum ON Time

This is a function for extruders.

This parameters sets the minimum output ON time for the cooling-side control output during auto-tuning.

Sets the time required for operation of the actuator connected to the cooling-side control output (Unit: second).

The default setting of "LCT Cooling Output Minimum ON Time" is based on the actuator operation time of a standard extruder.

An example of a setting calculation is shown below.

a) Configuration

This example uses a Temperature Control Unit with heating and cooling control outputs and a voltage output for driving SSR, to which relays and solenoid valves are connected.

b) Calculation parameters

Item	Value
Fixed value for Temperature Control Unit	0.02 s
Relay operation time	0.02 s
Solenoid valve operation time	0.06 s
Safety factor	2

c) Calculations

LCT Cooling Output Minimum ON Time

= (Fixed value for Temperature Control Unit + Relay operation time + Solenoid valve operation time) × Safety factor

= (0.02 s + 0.02 s + 0.06 s) × 2

= 0.2 s

Water cooling output adjustment function

"Water-Cooling Output Adjustment" is the function of extruders.

The water cooling output adjustment function can be used when "Water cooling" is selected as the heating/cooling tuning method.

Refer to *7-5-3 Water Cooling Output Adjustment Function* on page 7-66 for details on this setting.

Item

The valid parameters differ for ON/OFF control and PID control.

The table below shows the parameters that are valid during ON/OFF control.

Setting name*1	Support Software display	Description	Default	Setting range	Unit	Update timing
Ch□ Dead Band*2	Ch□ Dead Band	Sets the dead zone to turn OFF the heating and cooling outputs for heating/cooling control type models. When this setting is used with hysteresis, the three-position control is possible.	0	-1999 to 9999	0.1°C or 0.1°F	Immediately

*1. □ indicates the Ch number.

*2. Parameter for the heating/cooling control type only.

The table below shows the parameters that are valid during PID control.

Setting name*1	Support Software display	Description	Default	Setting range	Unit	Update timing
Ch□ Heating/Cooling Tuning Method*2	Ch□ Heating/Cooling Tuning Method	Sets the tuning method for heating/cooling control that is used for autotuning (AT). 0: Same as heating control 1: Linear 2: Air cooling 3: Water cooling	0	0/1/2/3	---	After the Unit is restarted
Ch□ LCT Cooling Output Minimum ON Time*2	Ch□ LCT Cooling Output Minimum ON Time	This parameter sets the minimum output ON time for the cooling-side control output during autotuning. Sets the time required for operation of the actuator connected to the cooling-side control output. The default setting is based on the actuator operation time of a standard extruder.	2	1 to 10	0.1 s	After the Unit is restarted

*1. □ indicates the Ch number.

*2. Parameter for the heating/cooling control type only.

● Precautions When You Change Set Values

When adjusting the set value of the setting item whose update timing is "Immediately" in the actual system, change this set value only and transfer it to the Unit.

Note that a restart is required after changing the set value of a setting item whose update timing is "After the Unit is restarted" and transferring it to the Unit.

Target NX Units

Heating/cooling control type Temperature Control Unit

Setting Method

This section gives the setting method with the Sysmac Studio.

Even when using Support Software other than Sysmac Studio, set the parameters described in the procedure on the editing screen for the Unit operation settings and transfer them to the NX Units.

For details about displaying the editing screen for the Unit operation settings when using Support Software other than Sysmac Studio and how to transfer the settings to the NX Units, refer to the operation manual for the Support Software that you are using.

1 Display the Edit Unit Operation Settings Tab Page.

For the display methods, refer to *A-8 Displaying the Edit Unit Operation Settings Tab Page* on page A-129.

2 For settings related to heating/cooling control of the channel being set (Ch□), select a setting item from the dropdown list or enter the set value in the text box.

Refer to *A-9 Edit Unit Operation Settings Tab Page* on page A-132 for details about the editing method for the Unit operation settings.

3 Click the Transfer to Unit Button.

The settings are transferred from the Sysmac Studio to the NX Unit.

The settings below are applied after the Unit is restarted.

- Ch□ Heating/Cooling Tuning Method
- Ch□ LCT Cooling Output Minimum ON Time

The following settings are applied immediately.

- Ch□ Dead Band

Precautions for Safe Use

After using the Support Software to change Unit Operation Setting parameters that are applied when the Unit is restarted and transferring them to the Unit, the Unit is restarted after the transfer is completed. Always sufficiently check the safety of the connected devices before transferring the Unit operation settings.

7-4-4 Run or Stop Controls

Overview and Purpose

You can issue start/stop commands for temperature control.

Precautions for Safe Use

It takes 30 minutes of warm-up time for the measured value to stabilize after you turn ON the Temperature Control Unit. Start control after the warm-up period elapses.

Details on the Function

When temperature control starts (runs), the manipulated variable is output so that the current temperature can follow the target value.

This manipulated variable turns OFF when temperature control is stopped.

This command reverts to the default value when the power is turned ON again or the Unit is restarted.

● How to Execute the Function

Manipulate the Run or Stop bit of "Ch□ Operation Command" in the I/O data.

Refer to *Operation Command* on page 6-18 in *6-1-2 Details about Aggregated Data* on page 6-16 for details about the statuses.

● Execution Status Check

The run or stop status of the control can be checked using the Run or Stop Status bit of "Ch□ Operating Status" in the I/O data.

Refer to *Operating Status* on page 6-16 in *6-1-2 Details about Aggregated Data* on page 6-16 for details about the statuses.

Target NX Units

All Temperature Control Units

Setting Method

No setting is required.

7-4-5 Direct and Reverse Operation

Overview and Purpose

This function specifies reverse operation or direct operation. It is used to switch between heating control and cooling control.

Details on the Function

Specify direct operation to perform control that increases the manipulated variable in response to an increase in a measured value, as in cooling control.

Conversely, specify reverse operation to perform control that increases the manipulated variable in response to a decrease in a measured value, as in heating control.

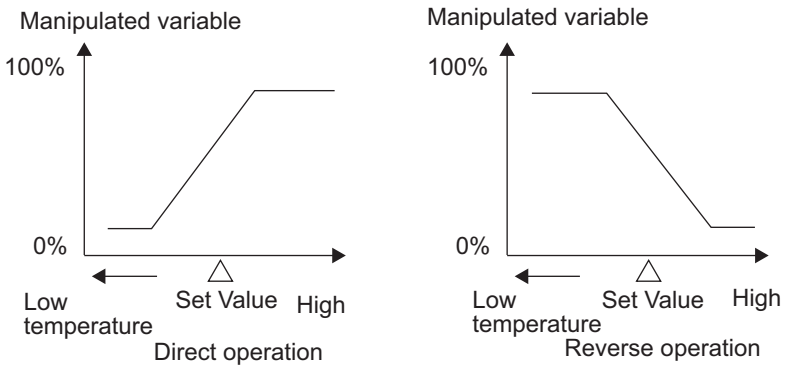

● Item

The settings are shown in the following table.

Setting name*1	Support Software display	Description	Default	Setting range	Unit	Update timing
Ch□ Direct/Reverse Operation	Ch□ Direct/Reverse Operation	Sets direct operation or reverse operation. 0: Reverse operation 1: Direct operation	0	0/1	---	After the Unit is restarted

*1. □ indicates the Ch number.

● Changing Direct/Reverse Operation

Direct/reverse operation can be changed by changing the "Ch□ Direct/Reverse Operation" setting, but a restart is necessary after changing the setting. To change the operation immediately without a restart, manipulate the "Inverting Direct or Reverse Operation Status" bit of "Ch□ Operation Command" in the I/O data.

This command reverts to the default value when the power is turned ON again or the Unit is restarted.

Refer to *Operation Command* on page 6-18 in *6-1-2 Details about Aggregated Data* on page 6-16 for details about the statuses.

● Execution Status Check

The execution status can be checked using the "Inverting Direct or Reverse Operation Status" bit of "Ch□ Operating Status" in the I/O data.

Refer to *Operating Status* on page 6-16 in *6-1-2 Details about Aggregated Data* on page 6-16 for details about the statuses.

Target NX Units

All Temperature Control Units

Setting Method

This section gives the setting method with the Sysmac Studio.

Even when using Support Software other than Sysmac Studio, set the parameters described in the procedure on the editing screen for the Unit operation settings and transfer them to the NX Units.

For details about displaying the editing screen for the Unit operation settings when using Support Software other than Sysmac Studio and how to transfer the settings to the NX Units, refer to the operation manual for the Support Software that you are using.

1 Display the Edit Unit Operation Settings Tab Page.

For the display methods, refer to *A-8 Displaying the Edit Unit Operation Settings Tab Page* on page A-129.

2 Select "Direct" or "Reverse" from the [Direct/Reverse Operation] dropdown list for the channel (Ch□) you want to set.

Refer to *A-9 Edit Unit Operation Settings Tab Page* on page A-132 for details about the editing method for the Unit operation settings.

3 Click the Transfer to Unit Button.

The settings are transferred from the Sysmac Studio to the NX Unit.

The settings are reflected after the Unit is restarted.

Precautions for Safe Use

After using the Support Software to change Unit Operation Setting parameters that are applied when the Unit is restarted and transferring them to the Unit, the Unit is restarted after the transfer is completed. Always sufficiently check the safety of the connected devices before transferring the Unit operation settings.

7-4-6 Manual MV

Overview and Purpose

Used to manually specify a manipulated variable.

This function is enabled only during PID control.

Details on the Function

This function is used in manual mode during PID control.

Manual control is called "manual mode", and automatic control is called "auto mode".

In manual mode, output is given with the manipulated variable specified in "Ch□ Manual MV" in the I/O data.

In auto mode, output is not given with the specified manipulated variable.

To switch the mode, manipulate the "Auto or Manual" bit of "Ch□ Operation Command" in the I/O data.

● Operation to Prevent Sudden Change in Manipulated Variable

When switching from the auto mode to the manual mode, the manipulated variable is passed on to prevent a sudden change in the manipulated variable. The operation is described below.

- When in the auto mode, set the "Reflect Manual MV" bit of "Ch□ Operation Command" in the I/O data to "Do not reflect" and change to the manual mode. ((A) in the diagram)
  At this time, the output manipulated variable is the manipulated variable at the time of switching to manual mode. ((B) in the diagram)
- To change the manipulated variable after switching to the manual mode, read the manipulated variable from "Ch□ MV Monitor" in the I/O data before setting the "Reflect Manual MV" bit to "Reflect". Specify this value for "Ch□ Manual MV" in the I/O data. ((c) in the diagram) After specifying the read manipulated variable, set the "Reflect Manual MV" bit to "Reflect" to pass on the manipulated variable. ((d) in the diagram)
- After passing on the manipulated variable, gradually modify the manipulated variable. ((e) in the diagram)
- After a power failure, the manipulated variable when the power supply is turned ON again is determined by "Ch□ Manual MV". ((f) in the diagram)
- When switching from the manual mode to the auto mode, the manipulated variable just before switching is passed on and PID control is performed. ((g) in the diagram)
- In the auto mode, "Manual MV" is not reflected regardless of the specified value of the "Reflect Manual MV" bit. ((h) in the diagram)

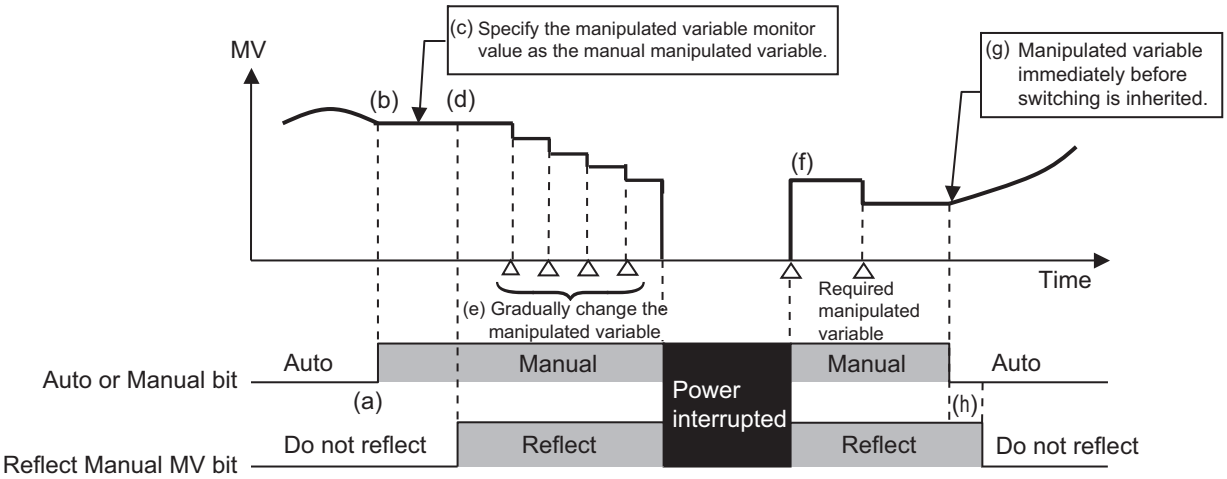

Specifying the Manual Manipulated Variable

Specify the manual manipulated variable with "Ch□ Manual MV" in the I/O data.

For details about the manual manipulated variable, refer to *6-1-1 Allocatable I/O Data* on page 6-2.

How to Execute the Function

To switch the mode, manipulate the "Auto or Manual" bit of "Ch□ Operation Command" in the I/O data. To reflect the manipulated variable, manipulate the "Reflect Manual MV" bit of "Ch□ Operation Command" in the I/O data.

Refer to *Operation Command* on page 6-18 in *6-1-2 Details about Aggregated Data* on page 6-16 for details about the statuses.

Execution Status Check

The mode status can be checked using the "Auto or Manual Status" bit of "Ch□ Operating Status" in the I/O data.

The reflect status of the manual manipulated variable can be checked using the "Reflect Manual MV " bit of "Ch□ Operating Status" in the I/O data.

Refer to *Operating Status* on page 6-16 in *6-1-2 Details about Aggregated Data* on page 6-16 for details about the statuses.

MV restrictions when the function for limiting simultaneous outputs is used together

Manual MV is restricted by MV Upper Limit and MV Lower Limit.

Target NX Units

All Temperature Control Units

Setting Method

No setting is required.

7-4-7 MV at Error

Overview and Purpose

This function outputs a fixed manipulated variable when a sensor disconnected error occurs.

This function is enabled only during PID control.

Details on the Function

The output manipulated variable (MV) can be specified when a sensor disconnected error occurs.

When a sensor disconnected error occurs, the manipulated variable at error is output.

When the Load Rejection Output Setting is set to "Output the manipulated variable at the Load Rejection", the Load Rejection MV is output with priority over the MV at Error. For details about the Load Rejection Output Setting, refer to*7-4-9 Load Rejection MV* on page 7-46.

● Item

The settings are shown in the following table.

Setting name*1	Support Software display	Description	Default	Setting range	Unit	Update timing
Ch□ MV at Error	Ch□ MV at Error	Sets the manipulated variable to output when a sensor disconnected error occurs.	0.0	• Standard control -50 to 1050 • Heating and cooling control -1050 to 1050	0.1 %	Immediately

*1. □ indicates the Ch number.

● Precautions When You Change Set Values

When adjusting the set value of the setting item whose update timing is "Immediately" in the actual system, change this set value only and transfer it to the Unit.

Note that a restart is required after changing the set value of a setting item whose update timing is "After the Unit is restarted" and transferring it to the Unit.

Target NX Units

All Temperature Control Units

Setting Method

This section gives the setting method with the Sysmac Studio.

Even when using Support Software other than Sysmac Studio, set the parameters described in the procedure on the editing screen for the Unit operation settings and transfer them to the NX Units.

For details about displaying the editing screen for the Unit operation settings when using Support Software other than Sysmac Studio and how to transfer the settings to the NX Units, refer to the operation manual for the Support Software that you are using.

1 Display the Edit Unit Operation Settings Tab Page.

For the display methods, refer to *A-8 Displaying the Edit Unit Operation Settings Tab Page* on page A-129.

2 Enter a set value in the [MV at Error] text box for the channel (Ch□) you want to set.

Refer to *A-9 Edit Unit Operation Settings Tab Page* on page A-132 for details about the editing method for the Unit operation settings.

3 Click the Transfer to Unit Button.

The settings are transferred from the Sysmac Studio to the NX Unit.

The changed settings are applied immediately.

Additional Information

It is not necessary to restart an NX Unit after changing the parameters.

7-4-8 MV limit

Overview and Purpose

This function limits the manipulated variable calculated by PID control and outputs it.

This function is enabled only during PID control.

Details on the Function

The manipulated variable limit operation differs according to the control type of the Temperature Control Unit.

The limit operation is described below for the standard control type and heating/cooling control type.

● MV limit operation for standard control type

The manipulated variable calculated by the PID control processing is limited by the MV Upper Limit and MV Lower Limit values.

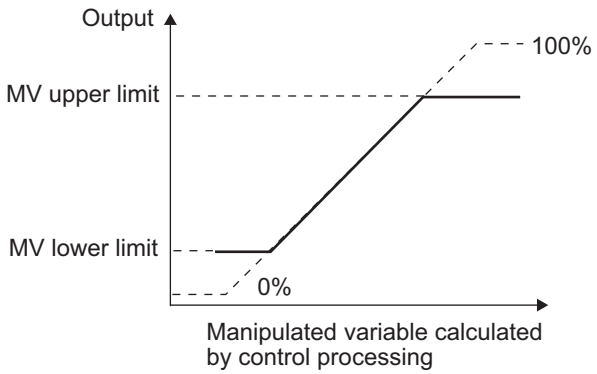

● MV limit operation for heating/cooling control type

MV Upper Limit: limit for heating-side manipulated variable.

MV Lower Limit: limit for cooling-side manipulated variable.

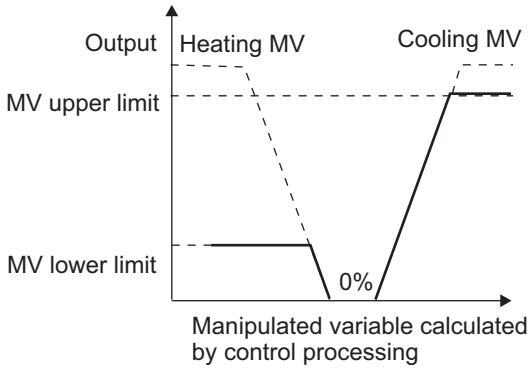

Additional Information

The Temperature Control Unit has the Limiting Simultaneous Outputs function as the function for limiting the manipulated variables.

For details on the operation when both MV Limit and the Limiting Simultaneous Outputs function are used together, refer to *7-6-4 Limiting Simultaneous Outputs* on page 7-91.

Item

The settings are shown in the following table.

Setting name*1	Support Software display	Description	Default	Setting range	Unit	Update timing
Ch□ MV Upper Limit	Ch□ MV Upper Limit	It is set in the case of controlling the upper-limit of manipulated value (MV).	1000	• standard control -50 to 1050 • heating and cooling control 0 to 10B50	0.1 %	Immediately
Ch□ MV Lower Limit*2	Ch□ MV Lower Limit	It is set in the case of controlling the lower-limit of manipulated variable (MV).	• standard control 0 • heating and cooling control -1000	• standard control -50 to 1050 • heating and cooling control -1050 to 0	0.1 %	Immediately

*1. □ indicates the Ch number.

*2. If the MV Lower Limit is set to a value higher than the MV Upper Limit, the MV Lower Limit value is restricted to the MV Upper Limit value during control. For example, for the following settings with the standard control type, 1000 is applied as the lower limit value during control.

- MV Upper Limit set value: 1000
- MV Lower Limit set value: 1050

Precautions When You Change Set Values

When adjusting the set value of the setting item whose update timing is "Immediately" in the actual system, change this set value only and transfer it to the Unit.

Note that a restart is required after changing the set value of a setting item whose update timing is "After the Unit is restarted" and transferring it to the Unit.

Target NX Units

All Temperature Control Units

Setting Method

This section gives the setting method with the Sysmac Studio.

Even when using Support Software other than Sysmac Studio, set the parameters described in the procedure on the editing screen for the Unit operation settings and transfer them to the NX Units.

For details about displaying the editing screen for the Unit operation settings when using Support Software other than Sysmac Studio and how to transfer the settings to the NX Units, refer to the operation manual for the Support Software that you are using.

1 Display the Edit Unit Operation Settings Tab Page.

For the display methods, refer to *A-8 Displaying the Edit Unit Operation Settings Tab Page* on page A-129.

2 Enter the set value in the [MV Upper Limit] or [MV Lower Limit] text box for the specified channel to be set (Ch□).

Refer to *A-9 Edit Unit Operation Settings Tab Page* on page A-132 for details about the editing method for the Unit operation settings.

3 Click the Transfer to Unit Button.

The settings are transferred from the Sysmac Studio to the NX Unit.

The changed settings are applied immediately.

Additional Information

It is not necessary to restart an NX Unit after changing the parameters.

7-4-9 Load Rejection MV

Overview and Purpose

This function performs a preset output operation when the Temperature Control Unit cannot receive the output settings from the CPU Unit due to an NX bus error or CPU Unit watchdog timer error.

With a Slave Terminal, this function performs a preset output operation when the Temperature Control Unit cannot receive output settings due to a communications error between the host and the Communications Coupler Unit or due to an NX bus error.

This function is enabled only during PID control.

Details on the Function

When the Temperature Control Unit cannot receive the output settings, when the CPU Unit is abnormal for example, you can specify whether to continue the control or output a preset manipulated variable.

Settings	Description
Continue the control.	Control continues even if an error occurs that prevents the output settings being received. However, the tuning function is canceled.
Output the manipulated variable (MV) at the load rejection.	The specified Load Rejection MV is output if an error occurs that prevents the output settings being received.*1

*1. When parameters that are reflected after the Unit is started are changed, the Temperature Control Unit cannot receive the output settings, and therefore, the manipulated variable at load rejection is output.

"Load Rejection MV" is output with priority over the "Manual MV" and "MV at Error".

● Item

The settings are shown in the following table.

Setting name*1	Support Software display	Description	Default	Setting range	Unit	Update timing
Ch□ Load Rejection Output Setting	Ch□ Load Rejection Output Setting	Sets the output status at load rejection. 0: Continue the control 1: Output the manipulated variable (MV) at the load rejection	0	0/1	---	After the Unit is restarted

Setting name*1	Support Software display	Description	Defa ult	Setting range	Unit	Update timing
Ch□ Load Rejection MV	Ch□ Load Rejection MV	Sets the manipulated variable to output if "Output the manipulated variable (MV) at the load rejection" is set in the load rejection output settings.	0	• standard control -50 to 1050 • Heating and cooling control -1050 to 1050	0.1 %	Immediately

*1. □ indicates the Ch number.

● Precautions When You Change Set Values

When adjusting the set value of the setting item whose update timing is "Immediately" in the actual system, change this set value only and transfer it to the Unit.

Note that a restart is required after changing the set value of a setting item whose update timing is "After the Unit is restarted" and transferring it to the Unit.

Target NX Units

All Temperature Control Units

Setting Method

This section gives the setting method with the Sysmac Studio.

Even when using Support Software other than Sysmac Studio, set the parameters described in the procedure on the editing screen for the Unit operation settings and transfer them to the NX Units.

For details about displaying the editing screen for the Unit operation settings when using Support Software other than Sysmac Studio and how to transfer the settings to the NX Units, refer to the operation manual for the Support Software that you are using.

1 Display the Edit Unit Operation Settings Tab Page.

For the display methods, refer to *A-8 Displaying the Edit Unit Operation Settings Tab Page* on page A-129.

2 Select the set value from the "Load Rejection Output Setting" dropdown list for the channel (Ch□) you want to set. If "Output the manipulated variable (MV) at the load rejection" is selected, enter a set value in the "Load Rejection MV" text box.

Refer to *A-9 Edit Unit Operation Settings Tab Page* on page A-132 for details about the editing method for the Unit operation settings.

3 Click the Transfer to Unit Button.

The settings are transferred from the Sysmac Studio to the NX Unit.

The settings below are applied after the Unit is restarted.

- Ch□ Load Rejection Output Setting

The following settings are applied immediately.

- Ch□ Load Rejection MV

Precautions for Safe Use

After using the Support Software to change Unit Operation Setting parameters that are applied when the Unit is restarted and transferring them to the Unit, the Unit is restarted after the transfer is completed. Always sufficiently check the safety of the connected devices before transferring the Unit operation settings.

7-4-10 MV Branch

Version Information

The MV Branch function is supported in Temperature Control Units with unit version 1.1 or later.

Overview and Purpose

This function outputs the manipulated variables of a channel to another channel.

The manipulated variables, where the slope or offset is calculated for the manipulated variables of the branch source, can be output to the branch-destination channel.

This makes it possible to reduce the number of input sensors, cables, and construction cost. This function is available only for the standard control type.

Also, this function is enabled only during PID control.

Details on the Function

The calculation is performed by using the value of “Ch□ MV Slope” and “Ch□ MV Offset” based on the manipulated variables of the channel selected in the setting of “Ch□ MV Branch Operation”, and the calculated manipulated variables are output.

The calculation method is shown below.

MV of branch-destination channel = MV of branch-source channel × MV slope of branch-destination channel + MV offset of branch-destination channel

● Selection of the branch-source channel

Set in “Ch□ MV Branch Operation”.

As an example, the setting items of the MV branch operation of Ch2 are shown below.

Setting name	Setting range
Ch2 MV Branch Operation	0: Disable 1: Select Ch1 2: Select Ch1 [Disable the measured value] 3: Select Ch2 4 to 7: Disable

- When “Disable” is set
  The MV branch function is disabled. Normal control is executed for Ch2.

- When “Select Ch1” is set

  The operation of MV branch is performed with the branch-source channel as Ch1, and the calculated MV is output to Ch2. The “Measured value” of Ch2, and functions such as the temperature alarm that use the measured value are enabled.
- When “Select Ch1 [Disable the measured value]” is selected

  The operation of MV branch is performed with the branch-source channel as Ch1, and the calculated MV is output to Ch2. However, the “Measured value” of Ch2, and functions such as the temperature alarm that use the measured value are disabled. In such a case, the “Measured value” and the "Sensor Disconnected Error" of "Ch□ Output and Alarm Status" are fixed as “0”.
- When “Select Ch2” is selected

  The local channel is selected. In such a case, the MV slope and offset are calculated for the manipulated variables of the local channel, and the calculated manipulated variables are output.

The valid setting range of “MV Branch Operation” differs for each channel. A channel having a larger number than the channel to be set cannot be set as the manipulated variable of the branch source. For details on the setting range of the “MV Branch Operation” of each channel, refer to *Item* on page 7-54.

● When tuning is performed

When using tuning such as AT, be sure to set the “MV Branch Operation”, “MV Slope”, and “MV Offset” before tuning. The control performance may be reduced if this function is set after performing tuning.

Operation Example

The function relation chart of the MV branch operation is shown below. An operation example based on this relation chart will be descried below.

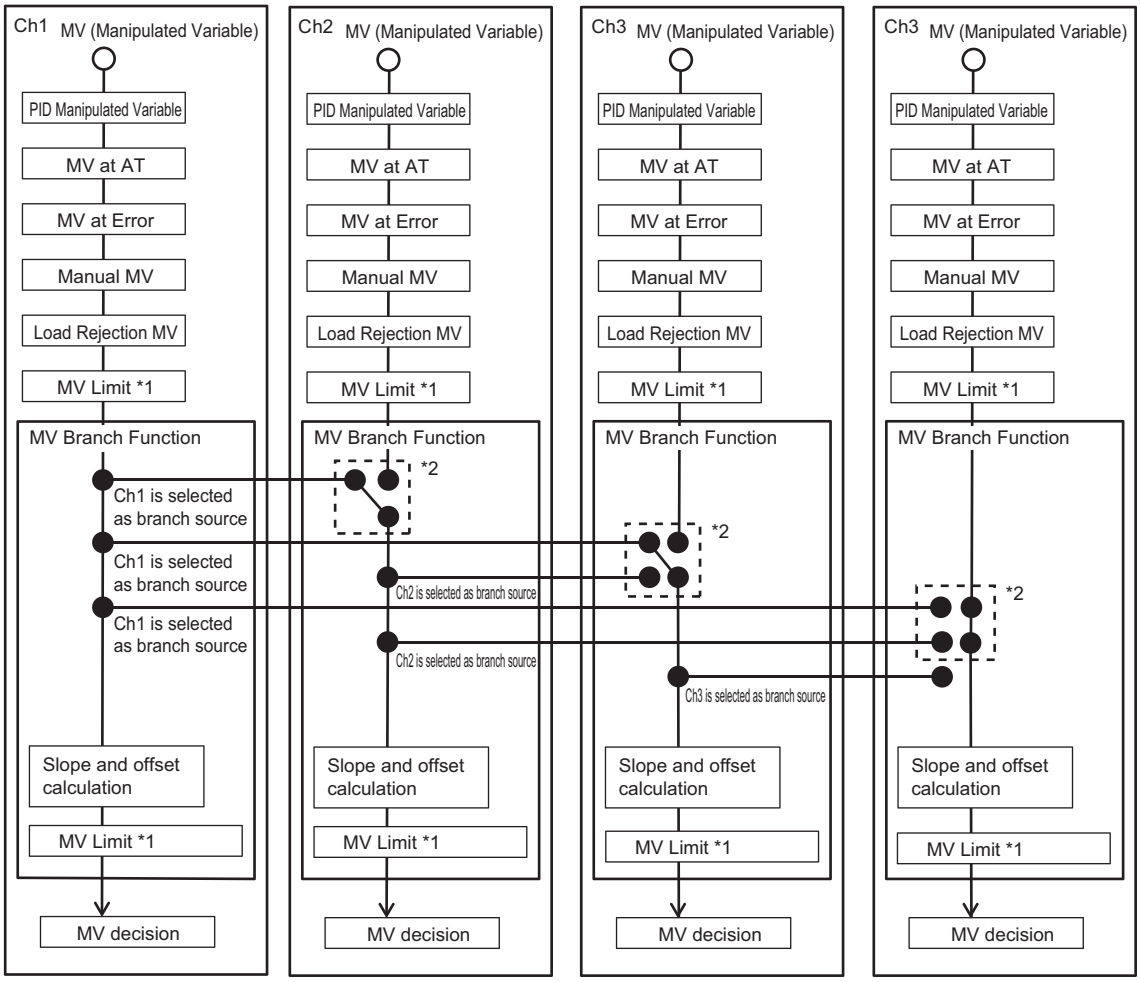

*1. For details on the MV Limit, refer to *7-4-8 MV limit* on page 7-44.

*2. Even if another channel is selected in “MV Branch Operation”, the local channel will be selected in the following cases, and the calculation of the slope and offset will not be performed.

In the manual mode

When load rejection occurs

The following settings shown in each operation example are the same:

- MV Branch Operation
- MV Slope
- MV Offset

Each operation example shows the operation when the settings and status are changed with respect to Example 1.

Example 2: Operation performed when “Ch□ Enable/Disable” is changed.

Example 3: Operation performed when “Ch□ Run/Stop” is changed.

Example 4: Operation performed when “Ch□ Auto/Manual” is changed.

Example 5: Operation performed when the connection status of the sensor is changed.

Example 1) Operation that acts as reference for each operation example

When Enable/Disable is set to Enable for all channels, and also the Run state and Auto mode are set, the MV branch is calculated for Ch2 and Ch3 based on the manipulated variable of Ch1 selected as the branch source, and the calculated manipulated variable is output. Further, the MV branch is calculated for Ch4 based on the manipulated variable of Ch4 itself, and the calculated manipulated variable is output.

Item		Ch1	Ch2	Ch3	Ch4
Settings	Ch□ Enable/Disable	Enable			
	MV Branch Operation	0:Disable	1: Select Ch1	2: Select Ch1 [Disable the measured value]	7: Select Ch4
	MV Slope	1.000	0.900	0.800	0.700
	MV Offset	0.0%	10.0%	20.0%	30.0%
Status	Ch□ RUN or STOP	FALSE: RUN			
	Ch□ Auto or Manual Status	FALSE: Auto			
	Sensor connection	Connected			
	Sensor Disconnected Error	FALSE: No errors occurred			
MV	Manual MV	0.0%			
	MV at Error	0.0%			
	PID Manipulated Variable	50.0%	-	-	60.0%
	Calculated MV of MV Branch	50.0%	55.0%	60.0%	72.0%
MV to output		50.0%	55.0%	60.0%	72.0%
Important points of operation		Since the MV branch operation is disabled, the PID manipulated variable is output.	The MV branch operation is enabled. Calculated manipulated variable = 50.0 (%) × 0.900 + 10.0	The MV branch operation is enabled. Calculated manipulated variable = 50.0 (%) × 0.800 + +20.0	The MV branch operation is enabled. Calculated manipulated variable = 60.0 (%) × 0.700 + +30.0

Example 2) Operation performed when “Ch□ Enable/Disable” is changed

When Enable/Disable is set to Disable for Ch1 and Ch4, and Ch2 and Ch3 are enabled, the manipulated variable of Ch1 and Ch4 is not output. Also, since the Ch1 selected in the MV branch operation for Ch2 and Ch3 is disabled, the manipulated variable becomes 0.0%.

Item		Ch1	Ch2	Ch3	Ch4
Settings	Ch□ Enable/Disable	Disable	Enable	Enable	Disable
	MV Branch Operation	0:Disable	1: Select Ch1	2: Select Ch1 [Disable the measured value]	7: Select Ch4
	MV Slope	1.000	0.900	0.800	0.700
	MV Offset	0.0%	10.0%	20.0%	30.0%
Status	Ch□ RUN or STOP	FALSE: RUN			
	Ch□ Auto or Manual Status	FALSE: Auto			
	Sensor connection	Connected			
	Sensor Disconnected Error	FALSE: No errors occurred			
MV	Manual MV	0.0%			
	MV at Error	0.0%			
	PID Manipulated Variable	0.0%	-	-	0.0%
	Calculated MV of MV Branch	0.0%	10.0%	20.0%	30.0%
MV to output		0.0%	0.0%	0.0%	0.0%
Important points of operation		Since Ch1 Enable/Disable is Disable, the manipulated variable becomes 0.0%.	Since Ch1, which is the selected channel, is disabled, the MV branch is disabled.	Since Ch1, which is the selected channel, is disabled, the MV branch is disabled.	Since Ch4 Enable/Disable is Disable, the manipulated variable becomes 0.0%.

Example 3) Operation performed when “Ch□ Run/Stop” is changed

When Run/Stop is set to the Stop state for Ch2 and Ch4, the manipulated variable of Ch2 and Ch4 becomes 0.0%.

Item		Ch1	Ch2	Ch3	Ch4
Settings	Ch□ Enable/Disable	Enable			
	MV Branch Operation	0: Disable	1: Select Ch1	2: Select Ch1 [Disable the measured value]	7: Select Ch4
	MV Slope	1.000	0.900	0.800	0.700
	MV Offset	0.0%	10.0%	20.0%	30.0%
Status	Ch□ RUN or STOP	FALSE: RUN	TRUE: STOP	FALSE: RUN	TRUE: STOP
	Ch□ Auto or Manual Status	FALSE: Auto			
	Sensor connection	Connected			
	Sensor Disconnected Error	FALSE: No errors occurred			
MV	Manual MV	0.0%			
	MV at Error	0.0%			
	PID Manipulated Variable	50.0%	-	-	60.0%
	Calculated MV of MV Branch	50.0%	55.0%	60.0%	72.0%
MV to output		50.0%	0.0%	60.0%	0.0%
Important points of operation		The operation is the same as Example 1.	When the Stop state is set for Ch2, the manipulated variable becomes 0.0%.	The operation is the same as Example 1.	When the Stop state is set for Ch4, the manipulated variable becomes 0.0%.

Example 4) Operation performed when “Ch□ Auto/Manual” is changed

When Ch2 and Ch4 are set to manual mode, the manual manipulated variable is output in Ch2 and Ch4.

Item		Ch1	Ch2	Ch3	Ch4
Settings	Ch□ Enable/Disable	Enable			
	MV Branch Operation	0: Disable	1: Select Ch1	2: Select Ch1 [Disable the measured value]	7: Select Ch4
	MV Slope	1.000	0.900	0.800	0.700
	MV Offset	0.0%	10.0%	20.0%	30.0%
Status	Ch□ RUN or STOP	FALSE: RUN			
	Ch□ Auto or Manual Status	FALSE: Auto	TRUE: Manual	FALSE: Auto	TRUE: Manual
	Sensor connection	Connected			
	Sensor Disconnected Error	FALSE: No errors occurred			
MV	Manual MV	0.0%	40.0%	0%	70.0%
	MV at Error	0.0%			
	PID Manipulated Variable	50.0%	-	-	60.0%
	Calculated MV of MV Branch	50.0%	55.0%	60.0%	72.0%
MV to output		50.0%	40.0%	60.0%	70.0%
Important points of operation		The operation is the same as Example 1.	When Ch2 is set to manual mode, the manipulated variable becomes the manual manipulated variable.	The operation is the same as Example 1.	When Ch4 is set to manual mode, the manipulated variable becomes the manual manipulated variable.

Example 5) Operation performed when the connection status of the sensor is changed

When the sensor of Ch2, Ch3, and Ch4 is disconnected or not connected, the occurrence of the “Sensor Disconnected Error” of each channel, and the output manipulated variable are as shown below.

Item		Ch1	Ch2	Ch3	Ch4
Settings	Ch□ Enable/Disable	Enable			
	MV Branch Operation	0:Disable	1: Select Ch1	2: Select Ch1 [Disable the measured value]	7: Select Ch4
	MV Slope	1.000	0.900	0.800	0.700
	MV Offset	0.0%	10.0%	20.0%	30.0%
Status	Ch□ RUN or STOP	FALSE: RUN			
	Ch□ Auto or Manual Status	FALSE: Auto			
	Sensor connection	Connected	Disconnected, not connected	Disconnected, not connected	Disconnected, not connected
	Sensor Disconnected Error	FALSE: No errors occurred	TRUE: Occurred	FALSE: No errors occurred	TRUE: Occurred
MV	Manual MV	0.0%			
	MV at Error	0.0%	5.0%	15.0%	25.0%
	PID Manipulated Variable	50.0%	-	-	60.0%
	Calculated MV of MV Branch	50.0%	55.0%	60.0%	72.0%
MV to output		50.0%	55.0%	60.0%	25.0%
Important points of operation		The operation is the same as Example 1.	The Sensor Disconnected Error occurs. The manipulated variable of Ch2 is output as the value processed by the MV branch operation based on the manipulated variable of the selected Ch1.	Since the MV branch operation is “Select Ch1 [Disable the measured value]”, the Sensor Disconnected Error does not occur. The manipulated variable of Ch3 is output as the value processed by the MV branch operation based on the manipulated variable of the selected Ch1.	The Sensor Disconnected Error occurs. The manipulated variable is the MV at Error.

● Item

The settings are shown in the following table.

Setting name*1	Support Software display	Description	Default	Setting range	Unit	Update timing
Ch1 MV Branch Operation	Ch1 MV Branch Operation	Set whether to enable or disable the measured value of the branch-source channel and the local channel. If you select [Disable the measured value], the “Measured value” and the functions that use the measured value can be disabled.	0	0:Disable 1: Select Ch1 2 to 7: Disable	-	After the Unit is restarted
Ch2 MV Branch Operation	Ch2 MV Branch Operation		0	0:Disable 1: Select Ch1 2: Select Ch1 [Disable the measured value] 3: Select Ch2 4 to 7: Disable	-	After the Unit is restarted
Ch3 MV Branch Operation	Ch3 MV Branch Operation		0	0:Disable 1: Select Ch1 2: Select Ch1 [Disable the measured value] 3: Select Ch2 4: Select Ch2 [Disable the measured value] 5: Select Ch3 6 to 7: Disable	-	After the Unit is restarted
Ch4 MV Branch Operation	Ch4 MV Branch Operation		0	0:Disable 1: Select Ch1 2: Select Ch1 [Disable the measured value] 3: Select Ch2 4: Select Ch2 [Disable the measured value] 5: Select Ch3 6: Select Ch3 [Disable the measured value] 7: Select Ch4	-	After the Unit is restarted
Ch☐ MV Slope	Ch☐ MV Slope	Set the slope value for the calculation and output of the manipulated variables of the branch-source channel.	1000	1 to 9999	0.001	Immediately
Ch☐ MV Offset	Ch☐ MV Offset	Set the offset for the calculation and output of the manipulated variables of the branch-source channel.	0	-1999 to 9999	0.1%	Immediately

*1. ☐ indicates the Ch number.

Target NX Units

Standard control type Temperature Control Unit

Setting Method

This section describes the setting method with the Sysmac Studio.

Even when using Support Software other than Sysmac Studio, set the parameters described in the procedure on the editing screen for the Unit operation settings and transfer them to the NX Units.

For details about displaying the editing screen for the Unit operation settings when using Support Software other than Sysmac Studio and how to transfer the settings to the NX Units, refer to the operation manual for the Support Software that you are using.

1 Display the Edit Unit Operation Settings Tab Page.

For the display methods, refer to *A-8 Displaying the Edit Unit Operation Settings Tab Page* on page A-129.

2 For settings related to the MV branch operation of the channel being set (Ch□), select a setting item from the dropdown list or enter the set value in the text box.

Refer to *A-9 Edit Unit Operation Settings Tab Page* on page A-132 for details about the editing method for the Unit operation settings.

3 Click the Transfer to Unit Button.

The settings are transferred from the Sysmac Studio to the NX Unit.

The settings below are applied after the Unit is restarted.

- Ch□ MV Branch Operation

The following settings are applied immediately.

- Ch□ MV Slope
- Ch□ MV Offset

Precautions for Safe Use

After using the Support Software to change Unit Operation Setting parameters that are applied when the Unit is restarted and transferring them to the Unit, the Unit is restarted after the transfer is completed. Always sufficiently check the safety of the connected devices before transferring the Unit operation settings.

7-4-11 Load-short circuit protection

Overview and Purpose

This function protects the output circuit of the Temperature Control Unit, if an external device connected to the control output is short-circuited. This function is provided for the Temperature Control Unit with voltage outputs for driving SSR.

Details on the Function

As shown in the diagram below, when the control output (OUT) turns ON, the transistor turns ON and the output current (Iout) flows.

The output circuit transistor in the Temperature Control Unit generates heat when the output current (Iout) flows.

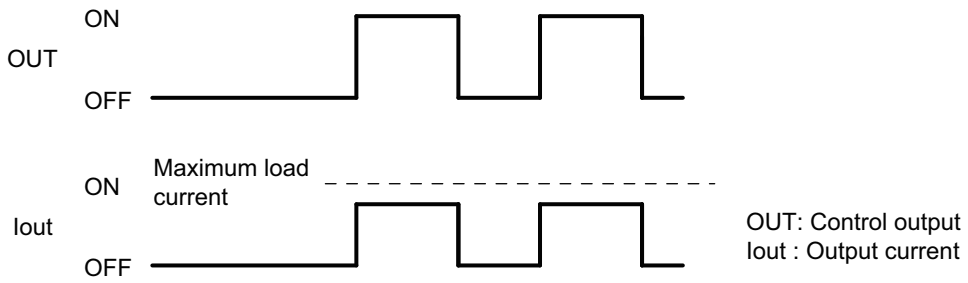

If a load short-circuit occurs and the output current (Iout) exceeds the maximum load current, the load short-circuit protection circuit operates to restrict the output current (Iout) to approx. 120% of the maximum load current.

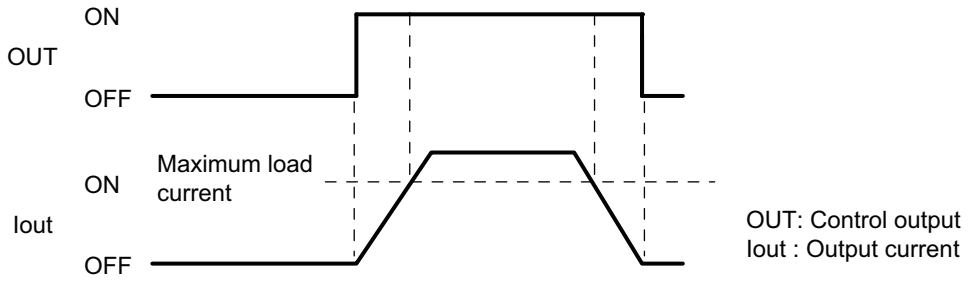

- **Restrictions on Use**

  The load short-circuit protection function only protects internal circuits temporarily.

  The output elements deteriorate if the short-circuit is not corrected. If an external load is short-circuited, immediately turn OFF the applicable control output and remove the cause of the short-circuit.

Target NX Units

Temperature Control Units whose output type is voltage outputs for driving SSR.

Setting Method

No setting is required.

7-5 Tuning

The tuning function automatically calculates the adjustment values necessary for control and determines the set values according to the target system of temperature control. This function also notifies when parameters are updated by tuning.

Precautions for Safe Use

Keep the power supply to the load (e.g., heater) ON during tuning.

Otherwise, correct tuning results will not be calculated and optimal control is not possible.

Precautions for Correct Use

- If a failure occurs in the Temperature Control Unit, the tuning parameters stored by the tuning function in the Temperature Control Unit are lost. Save the tuning parameters so that they can be restored.

  Refer to *Method to Restore Tuning Parameters* on page 7-86 in *7-5-5 Notifying the Update of Tuning Parameters* on page 7-85 for details on how to recover the tuning parameters.
- When using values calculated by the tuning function of the Temperature Control Unit, do not make the settings with the output data. The values calculated by the Temperature Control Unit are overwritten by the values of the output data.

7-5-1 Autotuning (AT)

Overview and Purpose

When AT is executed, the optimum PID constant for the set point at the time of execution is automatically calculated.

If you do not know the control characteristics before performing PID control, execute AT.

In addition, this Unit adopts a limit cycle method that will forcibly change the manipulated variable to obtain the characteristics of the controlled system.

Details on the Function

The types of autotuning available are 100% AT and 40% AT. 100% and 40% indicate the manipulated variable to generate the limit cycle. Only the standard control type can execute 40% AT. It cannot be executed by the Units with heating and cooling control.

100 Percent AT

Operation is performed as shown in the diagram below, regardless of the deviation (DV) at the start of AT execution. Use 100% AT to shorten the AT execution time. However, this results in greater overshoot than 40% AT.

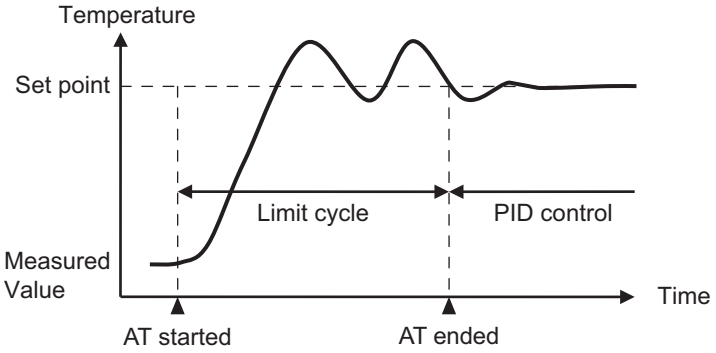

40 Percent AT

40% AT can reduce the overshoot which could occur during temperature increase in limit cycle.

It is used when a system which needs temperature control may malfunction due to overshoot during 100% AT.

However, the autotuning execution time may be longer than for 100% AT.

If the deviation (DV) at the start of 40% AT is 10% FS or more, the limit cycle runs once before the measured value reaches the set point and the provisional PID constant is calculated. Temperature is controlled with the PID constant until it reaches the set point so that no overshoot occurs, and then the limit cycle is performed.

If the deviation (DV) at the start of 40% AT is less than 10% FS, the limit cycle is performed as it is.

The operation is described in the following table.

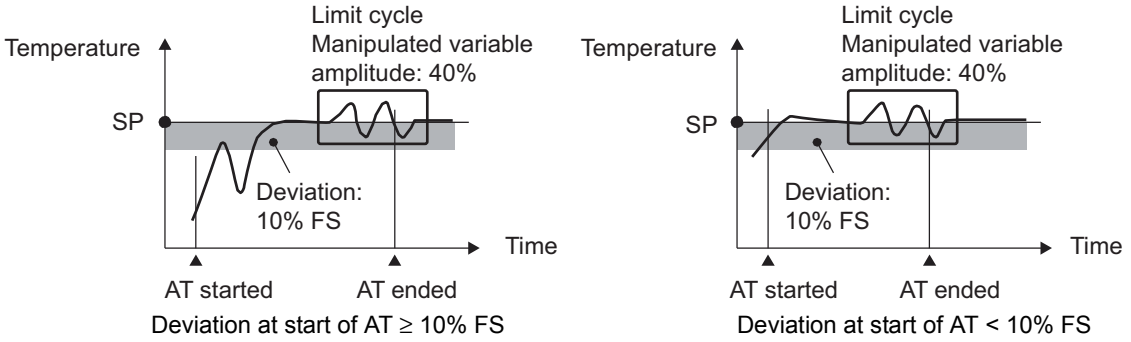

AT Cancel

When AT Cancel is executed, the executing 100% AT or 40% AT are canceled.

Execution condition

This function can be executed when the Temperature Control Unit is operating under the following conditions.

It cannot be executed if any of the conditions is not satisfied.

Operating condition	Setting item and status to check the operating condition
PID control	"Ch□ PID ON/OFF" setting is "1: 2-PID control".
Auto mode	"Auto or Manual Status" bit of "Ch□ Operating Status" is "0: Auto mode".
Running	"Run or Stop Status" bit of "Ch□ Operating Status" is "0: Run".
No load rejection occurred	TS indicator lights green on Temperature Control Unit.
Measured value is within the input indication range	Refer to *7-3-1 Input Type Settings* on page 7-11 for information on the input indication range of each input.

● Operation when a control stop command occurs during AT execution

After setting the Run or Stop bit of "Ch□ Operation Command" in the I/O data to "Stop", autotuning is canceled and control stops. Autotuning does not restart even if the Run or Stop bit is set to "Run" again.

To restart autotuning, run AT by operation command after setting the bit to "Run".

● Changing setting data during AT execution

Changes to the setting data while autotuning is running are not applied to the Unit.

● Operations When Load Rejection Occurs

AT is canceled.

Precautions for Correct Use

When the "100 Percent AT Status" bit and "40 Percent AT Status" bit of "Ch□ Operating Status" in the I/O data are ON, do not turn OFF the power as the tuning results may be saved in the nonvolatile memory in the Temperature Control Unit.

If the power is turned OFF while the results are saved in the nonvolatile memory, the tuning parameters stored in the Temperature Control Unit are disabled and the tuning parameters last saved in the CPU Unit or Communications Coupler Unit to which the Temperature Control Unit is connected are enabled.

● Checking the execution method and execution status

To execute AT, use the "100 Percent AT" bit or the "40 Percent AT" bit of the "Ch□ Operation Command" of I/O data. To cancel AT, use the "AT Cancel" bit. Refer to *Operation Command* on page 6-18 in *6-1-2 Details about Aggregated Data* on page 6-16 for details on operation commands.

The execution status of AT can be checked from the "100 Percent AT Status" bit or the "40 Percent AT Status" bit of the *"Ch□ Operating Status"* of I/O data. Refer to *Operating Status* on page 6-16 in *6-1-2 Details about Aggregated Data* on page 6-16 for details on the status.

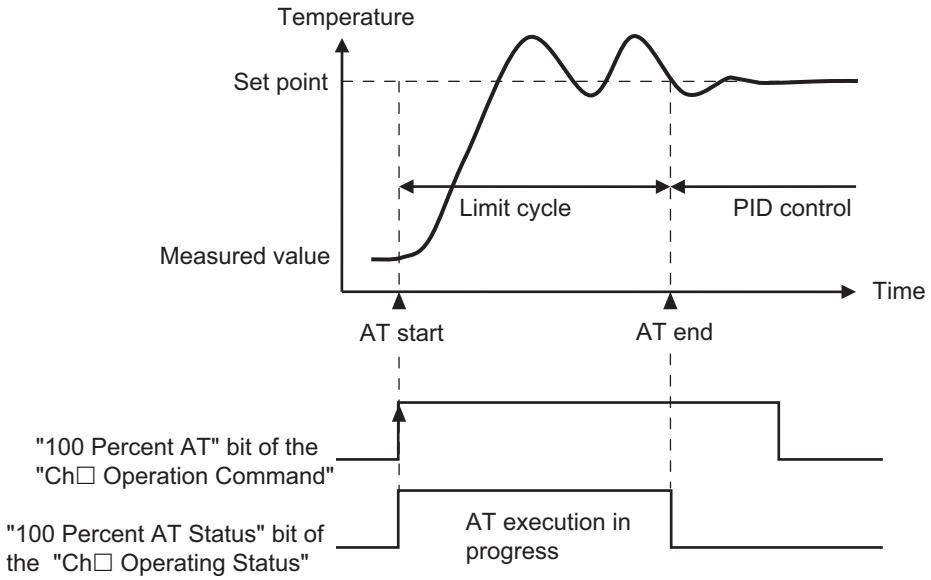

Target NX Units

All Temperature Control Units
However, only the standard control type can run 40% AT.

Setting Method

No setting is required.

7-5-2 Automatic Filter Adjustment

Overview and Purpose

This function allows stable measurement of the seal temperature by suppressing the temperature variations when a temperature sensor for packing machines is used.

This function is available only for the standard control type.

The seal quality in packing machines is influenced by the temperature of the seal surface at the hot plates.

Previously in most cases with packing machines, the point where hot plate temperature is measured is not close to the seal surface and easily influenced by heat such as from heaters. This caused deviations between the measured temperature and the actual temperature of the seal surface.

The actual seal surface temperature is essentially the same as the surface temperature of the heating plate.

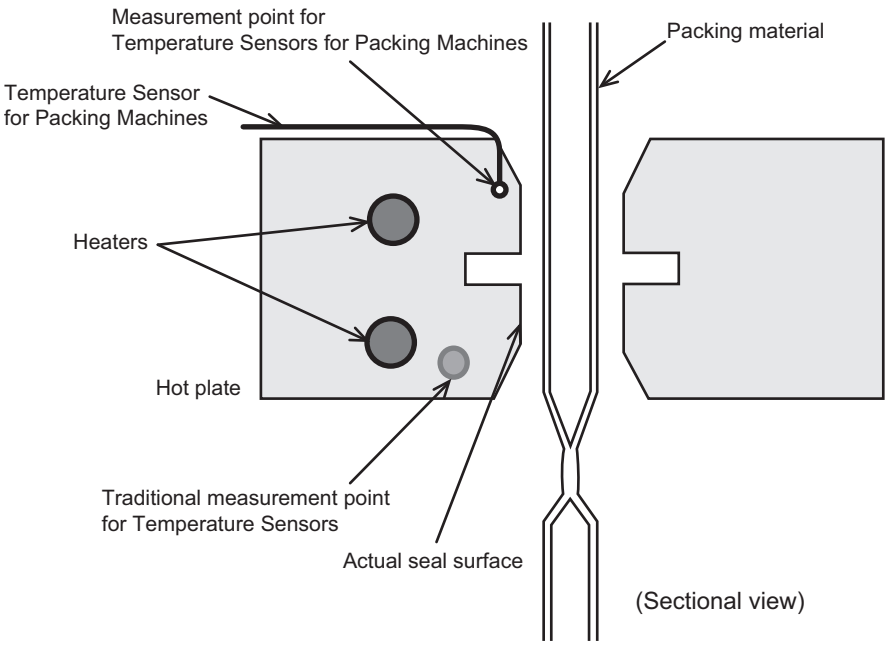

An OMRON Temperature Sensor for Packing Machine (E52-CA□□AF D=1 S□) and automatic filter adjustment function are used for stable temperature measurement of the heating plate seal surface. If you use our Temperature Sensors for Packing Machines, you can measure the actual temperature of the seal surface.

However, heat is absorbed by the packing materials, so periodic temperature variations can occur. The automatic filter adjustment function automatically suppresses these temperature variations. When you use the Temperature Sensor for Packing Machine and the automatic filter adjustment together, temperature variation is suppressed automatically during temperature control without human interference and temperature quality at actual seal surface can be controlled.

You can also use automatic filter adjustment to suppress temperature variations from periodic disturbances even with traditional temperature sensors.

An example of temperature control at conventional measurement points and one with a Temperature Sensor for Packing Machine are shown below.

- Example of Temperature Control at a Traditional Measurement Point

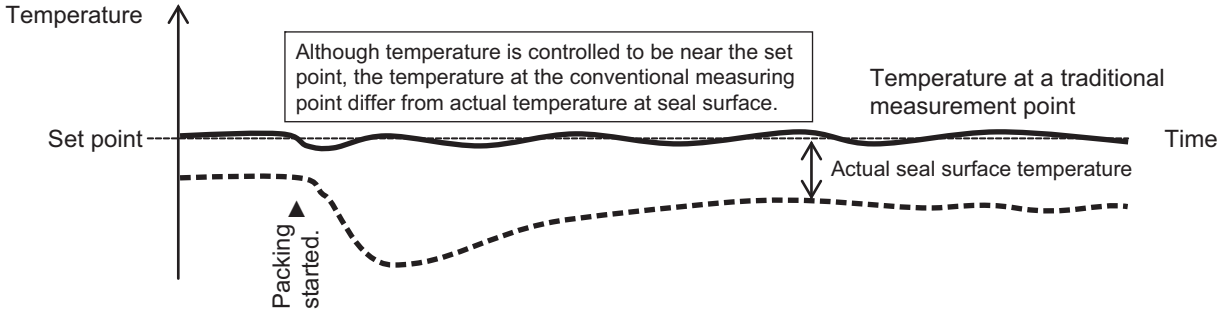

- Control Example Using a Temperature Sensor for Packing Machines

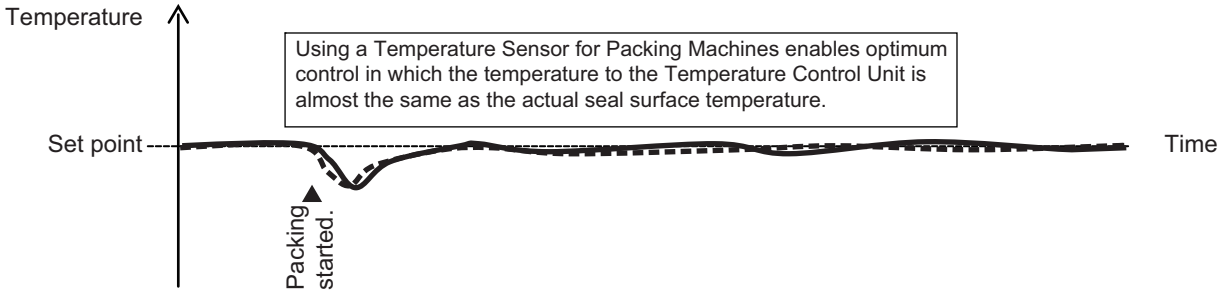

When Temperature Sensors for Packing Machine are used, temperature change becomes noticeable. Particularly when packing materials are thick or the packing contents are cold, heat is easily taken away from the hot plates and temperature variations occur. If normal temperature control is used, there will be temperature variations among seals, and a variation of long periods of several tens of seconds. Control can be improved by using the automatic filter adjustment function.

The diagram below shows a control example where automatic filter adjustment suppresses temperature variations caused by a Temperature Sensor for Packing Machine.

- Control Example Where Automatic Filter Adjustment Suppresses Temperature Variations Caused by a Temperature Sensor for Packing Machines

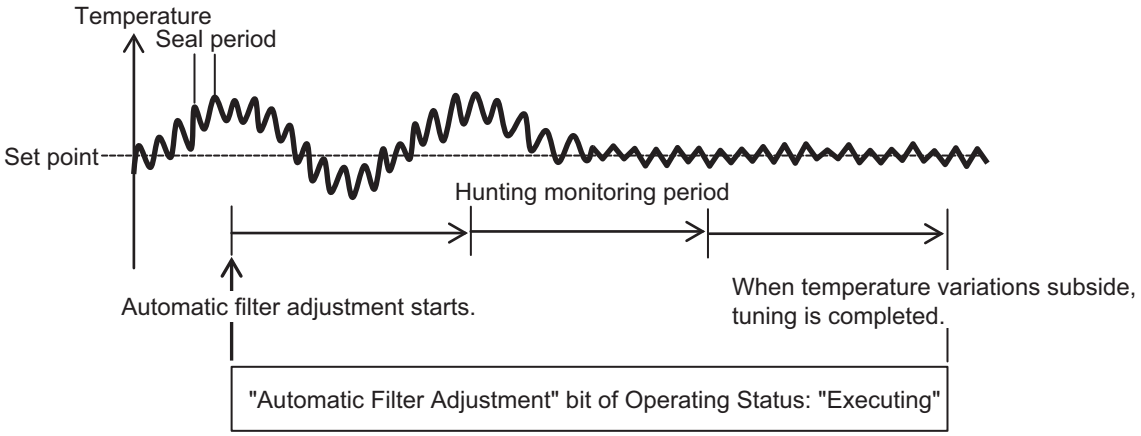

Cases where use of automatic filter adjustment is recommended

Use of automatic filter adjustment is recommended in the following cases.

- If temperature variation occurs when Temperature Sensors for Packing Machines are used even if AT is performed
- If temperature variation occurs after a heater is replaced
- If temperature variation occurs after packing materials are changed or the packing speed is changed
- If temperature variation occurs due to changes in the operating environment

Specification of Temperature Sensors for Packing Machines

Refer to *4-5 Installing Temperature Sensors for Packing Machines* on page 4-43 for the method to install the Temperature Sensors for Packing Machines.

For details, refer to *A-10 Temperature Sensor for Packing Machines* on page A-134.

Details on the Function

When the automatic filter adjustment function is executed, the "Ch□ Input Digital Filter" setting value is set automatically.

Execution condition

This function can be executed when the Temperature Control Unit is operating under the following conditions.

It cannot be executed if any of the conditions is not satisfied.

Operating condition	Setting item and status to check the operating condition
PID control	"Ch□ PID ON/OFF" setting is "1: 2-PID control".
Auto mode	"Auto or Manual Status" bit of "Ch□ Operating Status" is "0: Auto mode".
Running	"Run or Stop Status" bit of "Ch□ Operating Status" is "0: Run".
AT Stopping	"100 Percent AT Status" bit of "Ch□ Operating Status" is "0: 100% AT Stopping" and the "40 Percent AT Status" bit of "Ch□ Operating Status" is "0: 40% AT Stopping".
Sensor disconnected error not issued	"Sensor Disconnected Error" bit of "Ch Output and Alarm Status" is "0: No errors occurred".

Changing setting data during automatic filter adjustment execution

Changes to the setting data while automatic filter adjustment is running are not applied to the Unit.

Receiving operation commands during automatic filter adjustment execution

The following "Ch□ Operation Command" operation commands can be accepted during automatic filter adjustment execution.

- Auto or Manual
- Run or Stop
- Automatic Filter Adjustment Cancel
- 100 Percent AT
- 40 Percent AT

Canceling automatic filter adjustment

The automatic filter adjustment is canceled in the following cases. At this time, the input digital filter values during the adjustment are not saved in the Temperature Control Unit.

- When "Manual mode" is commanded with "Auto or Manual" in "Ch□ Operation Command"
- When "Cancel" is commanded with "Automatic Filter Adjustment Cancel" in "Ch□ Operation Command"
- When "Stop" is commanded with "Run or Stop" in "Ch□ Operation Command"
- When "100% AT Executing" is commanded with "100 Percent AT" in "Ch□ Operation Command"
- When "40% AT Executing" is commanded with "40 Percent AT" in "Ch□ Operation Command"
- "Sensor Disconnected Error" bit of "Ch□ Output and Alarm Status" is "Error occurred."
- When temperature variations do not settle down
- After turning power ON again or restarting
- When load rejection occurs

Restrictions on calculation time for automatic filter adjustment

After executing the function, the input digital filter value is not calculated until the measured value approaches the set point.

Execution timing for automatic filter adjustment

Automatic filter adjustment is executed after packing starts.

The work flow for packing machine operation is shown below.

Execute autotuning. → Complete autotuning. → Increase the temperature. → Start packing. → Execute automatic filter adjustment

To use the function with adaptive control, make preparations for adaptive control in advance.

Refer to *Procedure for Using Adaptive Control* on page 7-80 in *7-5-4 Adaptive control* on page 7-71 for details about preparing adaptive control.

Precautions for Correct Use

- When using automatic filter adjustment, turn ON the power to the load (e.g., heater) at the same time as or before turning ON the power of the Temperature Control Unit. Also, do not turn OFF the load power supply during the adjustment.
  Calculation of the input digital filter value cannot be performed correctly if the load power is turned ON after turning on the power supply of the Temperature Control Unit or if the load power is turned OFF during tuning.
- While the "Automatic Filter Adjustment" bit of "Ch□ Operating Status" in the I/O data is "Executing", do not turn OFF the power because the tuning results may be saved in the nonvolatile memory in the Temperature Control Unit. If the power is turned OFF while the results are saved in the nonvolatile memory, the tuning parameters stored in the Temperature Control Unit are disabled and the tuning parameters last saved in the CPU Unit or Communications Coupler Unit to which the Temperature Control Unit is connected are enabled.
- If you use automatic filter adjustment, do not use manual operation to change the PID constants that were automatically set by autotuning. It may not be possible to suppress hunting in some cases.
- If you perform automatic filter adjustment when there is a continuous deviation between the measured value and set point*, the input digital filter may not be adjusted correctly.
  Execute automatic filter adjustment from the Automatic Filter Adjustment Execute bit of Ch□ Operation Command of the I/O data while the measured value is close to the set point.
  * Examples of continuous deviation are given below.
  Example 1: Heat is not released, so the temperature declines only slowly.
  Example 2: The power supply to the heater is not turned ON.
- If there are water drops or similar object on the temperature sensor, the input digital filter may not be adjusted correctly.

Item

The settings are shown in the following table.

Setting name*1	Support Software display	Description	Default	Setting range	Unit	Update timing
Ch□ Automatic Filter Adjustment Seal Period	Ch□ Automatic Filter Adjustment Seal Period	This is the seal period used for automatic filter adjustment. It is the period of small temperature variations (up to several seconds) when sealing. Normally use the default value for this setting data. *2	20	1 to 100	0.1 s	After the Unit is restarted
Ch□ Automatic Filter Adjustment Hunting Monitor Period	Ch□ Automatic Filter Adjustment Hunting Monitor Period	This is the hunting monitor period used for automatic filter adjustment. It is the period of large temperature variations (several tens of seconds or longer) during packing. Normally use the default value for this setting data.* 2	200	10 to 1999	Seconds	After the Unit is restarted

*1. □ indicates the Ch number.

*2. If tuning for automatic filter adjustment does not end or takes a long time, measure the temperature waveform and set this setting according to the period of the fluctuations.

Checking the execution method and execution status

To execute automatic filter adjustment, use the "Automatic Filter Adjustment Execute" bit of "Ch□ Operation Command" in the I/O data. To cancel the function, use the "Automatic Filter Adjustment Cancel" bit of "Ch□ Operation Command" in the I/O data.

Refer to *Operation Command* on page 6-18 in *6-1-2 Details about Aggregated Data* on page 6-16 for details about Operation Command.

The execution status can be checked using the "Automatic Filter Adjustment" of "Ch□ Operating Status" in the I/O data.

Refer to *Operating Status* on page 6-16 in *6-1-2 Details about Aggregated Data* on page 6-16 for details about the statuses.

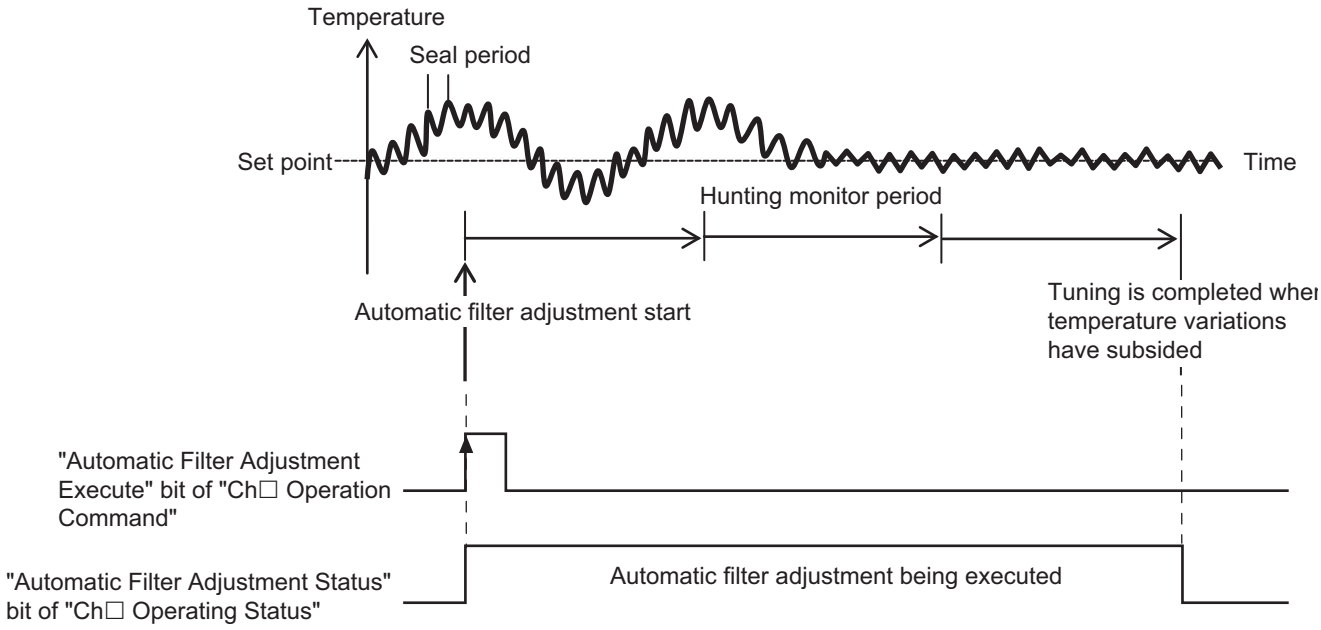

Target NX Units

Standard control type Temperature Control Unit

Setting Method

This section gives the setting method with the Sysmac Studio.

Even when using Support Software other than Sysmac Studio, set the parameters described in the procedure on the editing screen for the Unit operation settings and transfer them to the NX Units.

For details about displaying the editing screen for the Unit operation settings when using Support Software other than Sysmac Studio and how to transfer the settings to the NX Units, refer to the operation manual for the Support Software that you are using.

1 Display the Edit Unit Operation Settings Tab Page.

For the display methods, refer to *A-8 Displaying the Edit Unit Operation Settings Tab Page* on page A-129.

2 Enter set values in the [Automatic Filter Adjustment Seal Period] and [Automatic Filter Adjustment Hunting Monitor Period] text boxes for the channel (Ch□) you want to set.

Refer to *A-9 Edit Unit Operation Settings Tab Page* on page A-132 for details about the editing method for the Unit operation settings.

3 Click the Transfer to Unit Button.

The settings are transferred from the Sysmac Studio to the NX Unit.

The settings are reflected after the Unit is restarted.

Precautions for Safe Use

After using the Support Software to change Unit Operation Setting parameters that are applied when the Unit is restarted and transferring them to the Unit, the Unit is restarted after the transfer is completed. Always sufficiently check the safety of the connected devices before transferring the Unit operation settings.

7-5-3 Water Cooling Output Adjustment Function

Overview and Purpose

The water cooling output adjustment function can be used to suppress temperature variations in water-cooled extruders.

This function is available only for the heating/cooling control type.

This function simultaneously suppresses temperature variations that are caused mainly by the following two factors in water-cooled extruders, and maintain stable performance.

- When the heat of vaporization is used as a cooling method, such as in water-cooled extruders, the cooling performance is nonlinear, so temperature variations can occur.

  The water-cooling output adjustment function automatically suppresses hunting that occurs due to a water-cooling output.
- With traditional autotuning, temperature variations can occur because it cannot handle changes in operation conditions such as heat generation from materials and friction heat from screws.

  The water-cooling output adjustment function constantly monitors temperature changes and updates the cooling-side proportional band to help suppress temperature variations. Once the temperature variations are settled down, you can disable water-cooling output adjustment and continue control with the cooling-side proportional band at that time.

● Cases where use of water cooling output adjustment is recommended

We recommend that you use water-cooling output adjustment in the following cases.

- If temperature variation occurs due to changes in the water-cooling system
- If temperature variation occurs due to changes in the cooling valve settings
- To reduce the amount of work required to adjust cooling valves

Details on the Function

Water-cooling output adjustment works to suppress hunting by automatically increasing and decreasing the following value.

- Increasing the Cooling-side Proportional Band

  The Proportional Band (Cooling) parameter is adjusted to suppress the range of temperature variations.

- Decreasing the Cooling-side Proportional Band

  If disturbances results from heat generated by the material in the extruder or by screw friction, hunting will occur if the cooling capacity is too small. The Proportional Band (Cooling) parameter is adjusted to reduce the influence of hunting.

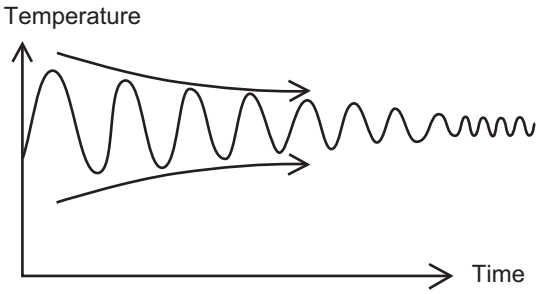

● Execution condition

This function can be run when the Temperature Control Unit is operating under the following conditions.

It cannot be executed if any of the conditions is not satisfied.

Operating condition	Setting item and status to check the operating condition
PID control	"Ch□ PID ON/OFF" setting is "1: 2-PID control".
Heating/Cooling Tuning Method is "Water cooling"	"Ch□ Heating/Cooling Tuning Method" setting is "3: Water cooling".
Auto mode	"Auto or Manual Status" bit of "Ch□ Operating Status" is "0: Auto mode".
Running	"Run or Stop Status" bit of "Ch□ Operating Status" is "0: Run".
reverse operation	Confirm that reverse operation is possible under the following combination of operation settings and operating status. • "Ch□ Direct/Reverse Operation" setting is "0: Reverse operation" and "Inverting Direct or Reverse Operation" bit of "Ch□ Operating Status" is "0: Not inverting". • "Ch□ Direct/Reverse Operation" setting is "1: Direct operation" and "Inverting Direct or Reverse Operation" bit of "Ch□ Operating Status" is "1: Inverting".
AT Stopping	"100 Percent AT Status" bit of "Ch□ Operating Status" is "0: 100% AT Stopping" and the "40 Percent AT Status" bit of "Ch□ Operating Status" is "0: 40% AT Stopping".
Integral Time (Cooling) is not "0"	Ch□ Integral Time (Cooling) setting is not "0".
Measured value is close to the set point	• Check the measured value using "Ch□ Measured Value INT" or "Ch□ Measured Value REAL" in the I/O data. • Check the set point using "Ch□ Set Point INT" or "Ch□ Set Point REAL" in the I/O data.
Sensor disconnected error not occurs	"Sensor Disconnected Error" bit of "Ch Output and Alarm Status" is "0: No errors occurred".

Changing setting data during water cooling output adjustment

The setting data can be changed during water cooling output adjustment.

Receiving operation commands during water cooling output adjustment

Operation commands can always be received during water cooling output adjustment.

Interrupting water cooling output adjustment

Water cooling output adjustment is interrupted in the following cases. At this time, Proportional Band (Cooling) parameter that is being adjusted is not saved in the Temperature Control Unit.

- When "Manual mode" is commanded with "Auto or Manual" in "Ch□ Operation Command"
- When "Stop" is commanded with "Run or Stop" in "Ch□ Operation Command"
- When "100% AT Executing" is commanded with "100 Percent AT" in "Ch□ Operation Command"
- When "40% AT Executing" is commanded with "40 Percent AT" in "Ch□ Operation Command"
- "Ch□ Direct/Reverse Operation" setting is "Reverse operation" but the "Inverting Direct or Reverse Operation" bit commands "Inverting"
- "Ch□ Direct/Reverse Operation" setting is "Direct operation" but the "Inverting Direct or Reverse Operation" bit commands "Not inverting"
- "Sensor Disconnected Error" bit of "Ch□ Output and Alarm Status" is Error occurred.
- "Ch□ Integral Time (Cooling)" was changed to "0"
- After turning power on again or restarting
- When load rejection occurs

Execution timing for water cooling output adjustment function

Water cooling output adjustment is performed after resin injection.

The work flow for water-cooled extruder operation is shown below.

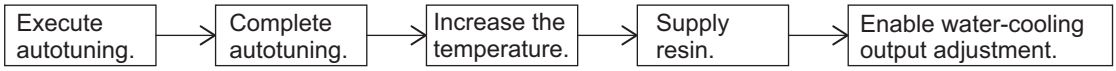

Precautions for Correct Use

- If the "Water Cooling Output Adjustment Proportional Band Increase" bit or "Water Cooling Output Adjustment Proportional Band Decrease" bit of "Ch□ Operating Status" in the I/O data is ON, do not turn OFF the power because the tuning results may be saved in the non-volatile memory in the Temperature Control Unit.
  If the power is turned OFF while the results are saved in the nonvolatile memory, the tuning parameters stored in the Temperature Control Unit are disabled and the tuning parameters last saved in the CPU Unit or Communications Coupler Unit to which the Temperature Control Unit is connected are enabled.
- If water-cooling output adjustment is used, do not manually change the PID constants that were automatically set by autotuning. It may not be possible to suppress hunting in some cases.

Item

The settings are shown in the following table.

Setting name*1	Support Software display	Description	Default	Setting range	Unit	Update timing
Ch□ Water-cooling Proportional Band Increase Constant	Ch□ Water-cooling Proportional Band Increase Constant	This is the increase constant used by the water cooling output adjustment function to adjust the Proportional Band (Cooling) value to reduce hunting. The function works to suppress an excessive cooling output that may cause hunting when the cooling-side proportional band is increased. The default setting is based on the actuator operation of a standard extruder.	170	100 to 1000	0.01	After the Unit is restarted
Ch□ Water-cooling Proportional Band Decrease Constant	Ch□ Water-cooling Proportional Band Decrease Constant	This is the decrease constant used by the water cooling output adjustment function to adjust the Proportional Band (Cooling) value to optimize the disturbance response. The function works to increase an insufficient cooling output that may reduce disturbance response when the cooling proportional band is decreased. Normally, use the default for tis parameter.	90	10 to 99	0.01	After the Unit is restarted
Ch□ Water-cooling Proportional Band Increase Threshold	Ch□ Water-cooling Proportional Band Increase Threshold	This parameter sets the threshold for the temperature variation used to detect hunting when water-cooling output adjustment is used. If the variation exceeds this threshold, the cooling proportional band is adjusted to reduce hunting. The default setting is based on the actuator operation of a standard extruder. However, if the temperature unit is set to °F (Fahrenheit), change it to 2.5°F.	14	1 to 2000	0.1°C or 0.1°F	Immediately
Ch□ Water-cooling Proportional Band Decrease Threshold *2	Ch□ Water-cooling Proportional Band Decrease Threshold	This parameter sets the threshold value to optimize the disturbance response used by the water cooling output adjustment function. If the variation is less than or equal to this threshold, the cooling-side proportional band is adjusted to optimize disturbance response. The default setting is based on the actuator operation of a standard extruder. However, if the temperature unit is set to °F (Fahrenheit), change it to 1.1°F.	6	0: OFF *3 1 to 2000	0.1°C or 0.1°F	Immediately

*1. □ indicates the Ch number.

*2. When the Water-cooling Proportional Band Decrease Threshold is set to a value that exceeds the Water-cooling Proportional Band Increase Threshold, the Water-cooling Proportional Band Decrease Threshold value is restricted to (Water-cooling Proportional Band Increase Threshold - 0.1) during control. For example, for the following settings, (14.0 - 0.1) = 13.9°C is applied as the Water-cooling Proportional Band Decrease Threshold value during control.

Water-cooling Proportional Band Increase Threshold setting: 14.0°C

Water-cooling Proportional Band Decrease Threshold setting: 15.0°C

*3. If "Ch□ Water-cooling Proportional Band Decrease Threshold" is set to "OFF", the process of decreasing the proportional band is disabled.

Precautions When You Change Set Values

When adjusting the set value of the setting item whose update timing is "Immediately" in the actual system, change this set value only and transfer it to the Unit.

Note that a restart is required after changing the set value of a setting item whose update timing is "After the Unit is restarted" and transferring it to the Unit.

How to Execute the Function

To execute water cooling output adjustment, manipulate the "Water Cooling Output Adjustment" bit of "Ch□ Operation Command" in the I/O data.

Refer to *Operation Command* on page 6-18 in *6-1-2 Details about Aggregated Data* on page 6-16 for details about Operation Command.

Execution Status Check

The execution status can be checked using the "Water Cooling Output Adjustment Proportional Band Increase" bit or "Water Cooling Output Adjustment Proportional Band Decrease" bit of "Ch□ Operating Status" in the I/O data.

Refer to *Operating Status* on page 6-16 in *6-1-2 Details about Aggregated Data* on page 6-16 for details about the statuses.

Target NX Units

Heating/cooling control type Temperature Control Unit

Setting Method

This section gives the setting method with the Sysmac Studio.

Even when using Support Software other than Sysmac Studio, set the parameters described in the procedure on the editing screen for the Unit operation settings and transfer them to the NX Units.

For details about displaying the editing screen for the Unit operation settings when using Support Software other than Sysmac Studio and how to transfer the settings to the NX Units, refer to the operation manual for the Support Software that you are using.

1 Display the Edit Unit Operation Settings Tab Page.

For the display methods, refer to *A-8 Displaying the Edit Unit Operation Settings Tab Page* on page A-129.

2 Enter the set values in the [Water-cooling Proportional Band Increase Threshold], [Water-cooling Proportional Band Decrease Threshold], [Water-cooling Proportional Band Increase Constant], and [Water-cooling Proportional Band Decrease Constant] text boxes for the channel (Ch□) you want to set.

Refer to *A-9 Edit Unit Operation Settings Tab Page* on page A-132 for details about the editing method for the Unit operation settings.

3 Click the Transfer to Unit Button.

The settings are transferred from the Sysmac Studio to the NX Unit.

The settings below are applied after the Unit is restarted.

- Ch□ Water-cooling Proportional Band Increase Constant
- Ch□ Water-cooling Proportional Band Decrease Constant

The following settings are applied immediately.

- Ch□ Water-cooling Proportional Band Increase Threshold
- Ch□ Water-cooling Proportional Band Decrease Threshold

Precautions for Safe Use

After using the Support Software to change Unit Operation Setting parameters that are applied when the Unit is restarted and transferring them to the Unit, the Unit is restarted after the transfer is completed. Always sufficiently check the safety of the connected devices before transferring the Unit operation settings.

7-5-4 Adaptive control

Overview and Purpose

Adaptive control is a control method that helps to maintain optimum temperature control by following any changes that may occur due to system fluctuations, such as changes in the environment or equipment deterioration.

This function is available only for the standard control type.

Adaptive control has the following two features.

- You can increase control performance over traditional autotuning.
- Even if factors emerge during long-term equipment operation that cause temperature variations and influence system characteristics, such as changes in the operating environment or equipment deterioration, the changes can be followed to maintain high control performance.

Functions of adaptive control can be roughly divided into the following two:

- Controlling the system with PID constants that are optimum for the system characteristics
- Maintaining the system in optimum status by following to changes in the system characteristics

You can use only the function to find the optimum PID constants for the system characteristics.

● Controlling the System with PID Constants that are Optimum for System Characteristics

When temperature control is performed by adaptive control, system performance is evaluated during the temperature increase. (Refer to (a) in the figure below.)

When the evaluation of the system performance is completed, the PID constants automatically calculated for the adaptive control are set. The PID constants for adaptive control are already adjusted to be optimum PID constants for the system characteristics, compared to the PID constants calculated by autotuning. They improve response to set points and disturbance.

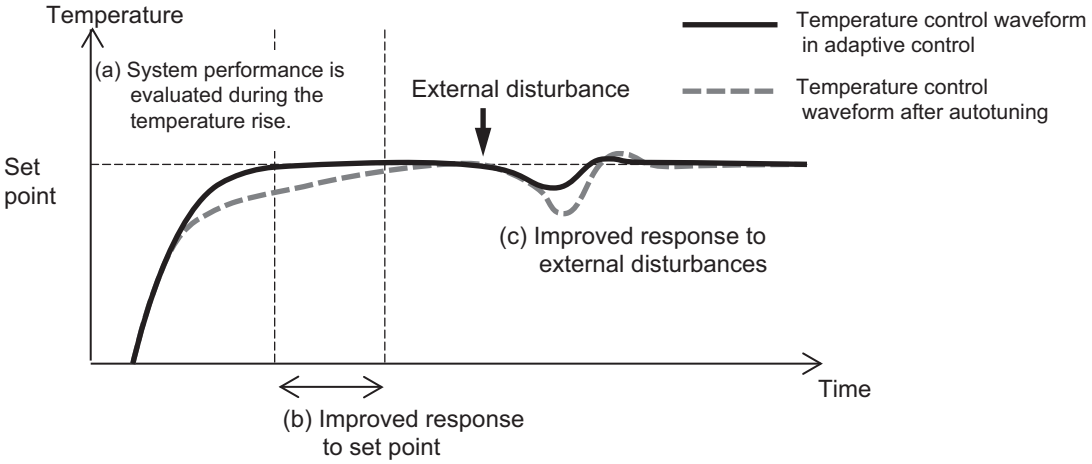

Precautions for Safe Use

When using adaptive control, turn ON power for the load (e.g., heater) at the same time as or before supplying power to the Temperature Control Unit. If you turn ON the power supply to the load after you turn ON the power supply to the Temperature Control Unit, correct tuning and optimum control will not be possible.

Maintaining the System in Optimum Status by Following to Changes in System Characteristics

After the PID constants for adaptive control are calculated, the system performance is evaluated each time the equipment is started and the PID constants for adaptive control are updated according to any changes. Therefore, even if the heater or others deteriorate over time and system performance changes gradually, control with the optimum PID constants is possible.

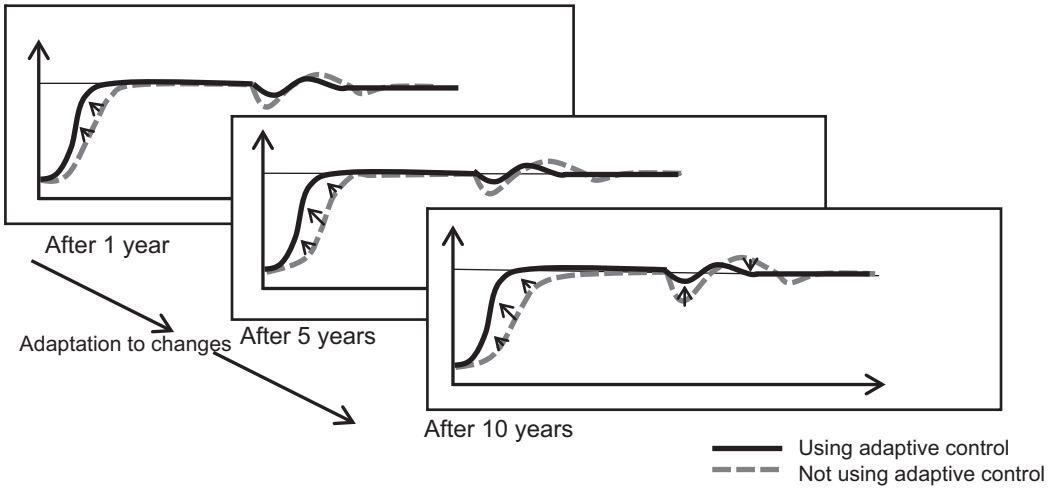

Precautions for Correct Use

- The expected performance will not be achieved if heaters deteriorate badly and are not capable to reach the set point.
- This function cannot be used with direct operation.

Cases where use of adaptive control is recommended

Use of adaptive control is recommended in the following cases.

- When satisfactory control is not possible with the PID constants calculated with autotuning
- When high control performance cannot be maintained due to temporal variations in system characteristics, such as changes in the environment or equipment deterioration

Precautions for Correct Use

The effectiveness of adaptive control may not be achieved under the following conditions.

- Heaters whose resistance is largely affected by temperature
- Devices with boiling or melting processes
- Devices with high thermal interference
- Devices that reach the set point in 5 s or less
- Devices that have a set point near room temperature
- When large disturbances (temperature fluctuations) occur during system performance evaluation.
- When the MV upper limit is less than 100%
- When the MV lower limit is greater than 0%

Details on the Function

Setting the adaptive control

The adaptive control has the following four setting options.

- Disable
- Fixed
- Notification
- Automatic updating

If the adaptive control function is not disabled, control is performed using the PID constants for adaptive control.

Run autotuning after making these settings.

After autotuning is completed, stop control temporarily. When the temperature drops sufficiently, start (run) control again.

After that, the operations shown in the table are performed according to the adaptive control settings.

Setting the adaptive control	Description of operation
Disable	Adaptive control is disabled.
Fixed	System performance evaluation is not performed. Select this item to control with fixed PID constants after calculating the PID constants for adaptive control by "Automatic updating" or "Notification".
Notification	After the system performance is evaluated, any system fluctuation is notified by the operating status. It allows changes in the operating environment or deterioration of the equipment to be checked. After the notification, when an Adaptive Control PID Update operation command is issued, the PID constants for adaptive control are updated. Refer to *Notification Operation and Evaluation Criteria* on page 7-75 for details about the notifications.
Automatic updating	When the system performance is evaluated, the PID constants for adaptive control are automatically updated. This allows control to be always performed with the optimal PID constants.

● Notification Operation and Evaluation Criteria

a) Notification operation

If it is determined that the PID constants need to be updated as a result of the system performance evaluation, the "Adaptive Control Notification in Progress" bit of "Ch□ Operating Status" in the I/O data changes to "1: Notifcation" and changes in the operating environment or deterioration of the equipment are notified. The "Adaptive Control Notification in Progress" bit is determined after system performance evaluation is performed three times.

If the system fluctuation is small, the bit status is "0: No notification" but the PID constants for adaptive control are calculated. The status can be checked with the "Adaptive Control PID Update Enabled" bit of "Ch□ Operating Status".

To update the PID constants, change the "Adaptive Control PID Update" bit of "Ch□ Operation Command" from "0" to "1".

Refer to *6-1-1 Allocatable I/O Data* on page 6-2 for details about the operation commands.

Refer to *Operating Status* on page 6-16 in *6-1-2 Details about Aggregated Data* on page 6-16 for details about the statuses.

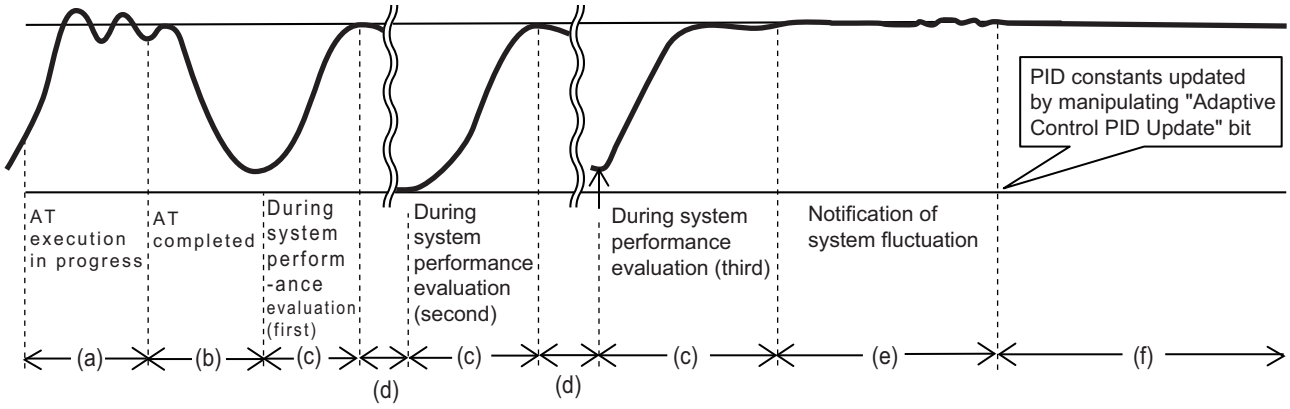

(a) : 100 Percent AT Status bit of "Ch□ Operating Status": Executing

(b) : 100 Percent AT Status bit of "Ch□ Operating Status": Stopping

(c) : "Adaptive Control System Performance Evaluation State" bit of "Ch□ Operating Status": Performance evaluation is in progress

(d) : "Adaptive Control System Performance Evaluation State" bit of "Ch□ Operating Status": Performance evaluation is not in progress

(e) : "Adaptive Control Notification in Progress" bit of "Ch□ Operating Status": Notification

(f) : "Adaptive Control Notification in Progress" bit of "Ch□ Operating Status": No notification

b) Criteria for notification

If the adaptive control is set to notify, "Ch□ System Fluctuation Reference Deviation" sets the criterion to evaluate whether to make a notification. If the rate of change in the proportional band calculated during system performance evaluation exceeds this reference value, a variation in the system is notified by the "Adaptive Control Notification in Progress" bit of "Ch□ Operating Status".

The proportional band is the criterion for detecting system fluctuations. It is the set point response proportional band calculated during the second system performance evaluation. It is automatically set in "Ch□ System Fluctuation Reference Proportional Band".

A relative comparison is made between SP Response Proportional Band calculated by adaptive control and the System Fluctuation Reference Proportional Band. If it equals or exceeds the System Fluctuation Reference Deviation, a system fluctuation is determined to have occurred.

As "Ch□ System Fluctuation Reference Proportional Band" is retained in nonvolatile memory inside the Unit, it is not passed on when the Unit is replaced. After replacing the Unit, the "Ch□System Fluctuation Average Deviation" is set automatically after the system performance is evaluated three times.

Additional Information

The formula for evaluating system fluctuations is as follows:

A system fluctuation occurred if Pbjdv ≤ | (Pbfs - Pbf[n]) | / Pbfs × 100

Pbjdv: System Fluctuation Reference Deviation

Pbfs: System Fluctuation Reference Proportional Band

Pbf[n]: SP Response Proportional Band calculated by adaptive control

Example 1) Determined to have a system fluctuation when Pbjdv = 15.0%, Pbfs = 100.0°C, and Pbf[n] = 115.0°C or above.

Example 2) Determined to have a system fluctuation when Pbjdv = 15.0%, Pbfs = 100.0°C, and Pbf[n] = 85.0°C or less.

Example 3) Determined not to have a system fluctuation when Pbjdv = 15.0%, Pbfs = 100.0°C, and Pbf[n] = 114.9°C or less.

Start temperature for system performance evaluation

"Ch□ Adaptive Control Operation Possible Deviation" is the setting item that determines whether the evaluation of the system performance for adaptive control is possible, based on the relationship between the measured value at the start of control and the set point.

This parameter gives the temperature range, in percentage, over which system performance evaluation is performed based on the temperature range from 0°C to the set point as 100%. The default is 50.0 (%).

To ensure the performance of adaptive control, do not set a value less than 50%. If the Adaptive Control Operation Possible Deviation parameter is set to 50%, system performance evaluation for adaptive control will not be performed if the starting temperature is 50% of the set point or higher from 0°C. Examples are provided below.

Example: If the set point is 280°C, the maximum temperature at which adaptive control is possible is 140°C.

If the temperature is 140°C or lower when adaptive control is started, adaptive control will be performed. If the temperature is greater than 140°C, adaptive control will not be performed.

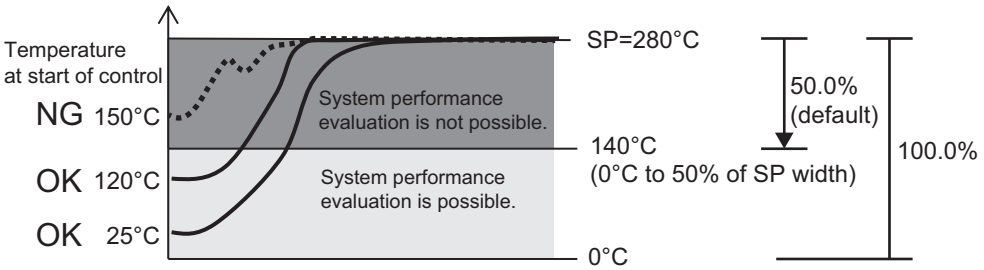

System fluctuation average deviation

If the adaptive control is set to notify, you can use the Ch□ System Fluctuation Average Deviation parameter to examine the degree of system changes from when the system first used the adaptive control up to present.

"Ch□ System Fluctuation Average Deviation" is reset to the default 0.0% when autotuning or PID update is performed.

"Ch□ System Fluctuation Average Deviation" is retained in nonvolatile memory inside the Unit, it is not passed on when the Unit is replaced. After replacing the Unit, the "Ch□ System Fluctuation Average Deviation" is set automatically after the system performance is evaluated three times.

Model parameters that express system characteristics

"Model parameters" is the generic term applied to the following parameters that express system characteristics.

- Ch☐ Model Creation PV Amplitude
- Ch☐ Model Creation MV Amplitude
- Ch☐ Model Creation ON Time
- Ch☐ Model Creation OFF Time

The model parameters are automatically calculated when autotuning is performed with "Ch☐ Adaptive Control" set to "Automatic updating" or "Notification". Therefore, it is not necessary to set these parameters. Set the same parameter values to transfer the system characteristics measured by another Temperature Control Unit.

PID constants for adaptive control

Adaptive control is performed with different PID constants each for transient control states and steady states. These two sets of PID constants (SP response PID constants and disturbance PID constants) and SP Response Coefficient Numbers are automatically calculated during system performance evaluation to obtain the optimum values to follow system fluctuations.

Therefore, it is not necessary to set these parameters.

The relationship between the two sets of PID constants and control states is shown below.

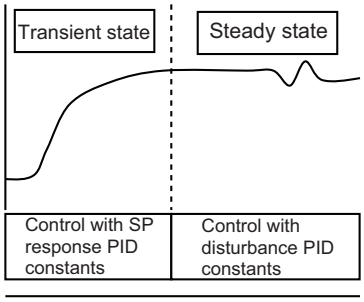

The names of the setting items are shown below.

- Ch☐ SP Response Proportional Band
- Ch☐ SP Response Integral Time
- Ch☐ SP Response Derivative Time
- Ch☐ SP Response Coefficient Number
- Ch☐ Disturbance Proportional Band
- Ch☐ Disturbance Integral Time
- Ch☐ Disturbance Derivative Time

Execution condition

This function can be run when the Temperature Control Unit is operating under the following conditions.

System performance evaluation is not possible if any of the conditions is not satisfied.

Operating condition	Setting item and status to check the operating condition
When "Adaptive Control" is "Automatic updating" or "Notification"	"Ch□ Adaptive Control" setting is "Automatic updating" or "Notification".
PID control	"Ch□ PID ON/OFF" setting is "1: 2-PID control".
Auto mode	Auto or Manual Status bit of "Ch□ Operating Status" is "0: Auto mode".
reverse operation	Confirm that reverse operation is possible under the following combination of operation settings and operating status. • "Ch□ Direct/Reverse Operation" setting is "0: Reverse operation" and "Inverting Direct or Reverse Operation" bit of "Ch□ Operating Status" is "0: Not inverting". • "Ch□ Direct/Reverse Operation" setting is "1: Direct operation" and "Inverting Direct or Reverse Operation" bit of "Ch□ Operating Status" is "1: Inverting".
AT Stopping	100 Percent AT Status bit of "Ch□ Operating Status" is "0: 100% AT Stopping" and the 40 Percent AT Status bit of "Ch□ Operating Status" is "0: 40% AT Stopping".
All model parameters are not default values	"Ch□ Model Creation PV Amplitude" is not "0" "Ch□ Model Creation MV Amplitude" is not "0" "Ch□ Model Creation ON Time" is not "0" "Ch□ Model Creation OFF Time" is not "0"
The start temperature and set point are separated for the amount set in Adaptive Control Operation Possible Deviation or more	• Check the measured value using "Ch□ Measured Value INT" or "Ch□ Measured Value REAL". • Check the set point using "Ch□ Set Point INT" or "Ch□ Set Point REAL". • Check "Ch□ Adaptive Control Operation Possible Deviation" set value.
The start temperature and set point are separated by 10°C or more	• Check the measured value using "Ch□ Measured Value INT" or "Ch□ Measured Value REAL". • Check the set point using "Ch□ Set Point INT" or "Ch□ Set Point REAL".
It is not a recovery from a sensor disconnected error at the start of operation	"Sensor Disconnected Error" bit of "Ch Output and Alarm Status" is "0: No errors occurred".
No load rejection occurred	TS indicator lights green on Temperature Control Unit.

Execution conditions

The following is the execution conditions for the function. The function is executed if any of the following conditions are satisfied.

- "Run or Stop" bit of "Ch□ Operation Command" in the I/O data is set to "Run"
- Started with "Run" when power was turned ON again or the Unit was restarted

Restrictions

The following limits apply when using adaptive control.

Item	Details of limit
Limit on starting temperature	If the control start temperature is higher than the temperature set in "Ch □ Adaptive Control Operation Possible Deviation", the system performance is not evaluated.
Limit on changing set points	Although the set point can be changed, if the set point is changed too much, the system characteristics change and may affect the control performance. If the set point is changed outside the range below, you are recommended to run autotuning again. • Set point calculated by autotuning ± 30 [%]
Limit on changing parameters during system performance evaluation	If the following parameters are changed during system performance evaluation, system performance evaluation or notification is canceled. The PID constants for adaptive control are not updated. • set point • PV Input Shift • PV Input Slope Coefficient • MV Upper Limit • MV Lower Limit • SP response PID constants • SP Response Coefficient Number • Disturbance PID constants • MV Slope • MV Offset
Limit on changing parameters after system performance evaluation	Changes to the following parameters that limit input from the system or output to the system are considered to be a system fluctuation, and the system performance is evaluated at the next control start. • PV Input Shift • PV Input Slope Coefficient • input digital filter • MV Upper Limit • MV Lower Limit • control period • SP response PID constants • SP Response Coefficient Number • Disturbance PID constants • MV Slope • MV Offset
Initializing model parameters	The model parameters are initialized if the following parameters related to the input range are changed. Autotuning must be performed again if using adaptive control. • Input Type • Temperature Unit

Precautions for Correct Use

If the "Adaptive Control System Performance Evaluation State" bit of "Ch□ Operating Status" in the I/O data is "Performance evaluation is in progress", do not turn OFF the power because the tuning results may be saved in the nonvolatile memory in the Temperature Control Unit. If the power is turned OFF while the results are saved in the nonvolatile memory, the tuning parameters stored in the Temperature Control Unit are disabled and the tuning parameters last saved in the CPU Unit or Communications Coupler Unit to which the Temperature Control Unit is connected are enabled.

Procedure for Using Adaptive Control

The procedure to use the adaptive control function is shown below. However, explanations of the setting items and I/O data Ch□ are omitted.

1 Make initial settings to use adaptive control.

Set the following items.

Item	Support Software display	Set values
PID ON/OFF	PID ON/OFF	2-PID control
Direct/Reverse Operation	Direct/Reverse Operation	reverse operation
Adaptive Control	Adaptive Control	Notification or Automatic updating*1

*1. Select the "Fixed" setting after a system performance evaluation is performed with "Notification" or "Automatic updating".

2 Use the following settings or bit operations to automatically set the parameters required for adaptive control.

(1) Set a numerical value for "Set Point" in the I/O data.

(2) Set the "Run or Stop" bit of Operation Command in the I/O data to "Run".

Control starts.

(3) Set the "100 Percent AT" bit of Operation Command in the I/O data to "100% AT Executing". Or, set the "40 Percent AT" bit of Operation Command to "40% AT Executing".

Autotuning is performed to evaluate the system performance. (Refer to (a) in the figure below.)

(4) When autotuning is completed, set the "Run or Stop" bit of Operation Command in the I/O data to "Stop".

Control stops and the temperature decreases. Allow the temperature to drop sufficiently. (Refer to (b) in the figure below.)

Do not change the PID constants for adaptive control by manual operations. This may cause an error in the calculated PID values during system performance evaluation.

(5) After confirming that the temperature has dropped adequately, set the "Run or Stop" bit of Operation Command in the I/O data to "Run".

Control starts and the temperature increases.

System performance evaluation is performed if the start temperature deviates for the value set in the "Adaptive Control Operation Possible Deviation" or more. (Refer to (c) in the figure below.)

The diagram below shows a sample waveform after the procedure above is performed.

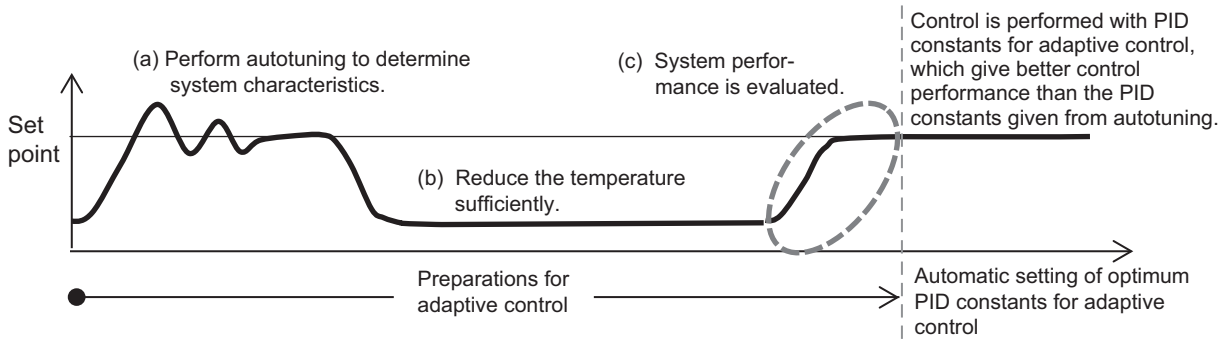

Automatic setting of model parameters required for adaptive control and PID constants for adaptive control are now completed.

The system characteristics are now known.

Operation proceeds according to the "Adaptive Control" setting.

Item

The settings are shown in the following table.

Setting name*1	Support Software display	Description	Default	Setting range	Unit	Update timing
Ch□ Adaptive Control	Ch□ Adaptive Control	Sets the operation method for adaptive control. 0: Disable 1: Fixed 2: Notification 3: Automatic updating	0	0/1/2/3	---	After the Unit is restarted
Ch□ Model Creation PV Amplitude	Ch□ Model Creation PV Amplitude	This is one of the model parameters used for adaptive control. It expresses the characteristics of the system. Set the same parameter values to transfer the system characteristics measured by another Temperature Control Unit.	0	0 to 9999	0.01% FS	After the Unit is restarted
Ch□ Model Creation MV Amplitude	Ch□ Model Creation MV Amplitude	This is one of the model parameters used for adaptive control. It expresses the characteristics of the system. Set the same parameter values to transfer the system characteristics measured by another Temperature Control Unit.	0	0 to 1000	0.1%	After the Unit is restarted
Ch□ Model Creation ON Time	Ch□ Model Creation ON Time	This is one of the model parameters used for adaptive control. It expresses the characteristics of the system. Set the same parameter values to transfer the system characteristics measured by another Temperature Control Unit.	0	0 to 9999	---	After the Unit is restarted
Ch□ Model Creation OFF Time	Ch□ Model Creation OFF Time	This is one of the model parameters used for adaptive control. It expresses the characteristics of the system. Set the same parameter values to transfer the system characteristics measured by another Temperature Control Unit.	0	0 to 9999	---	After the Unit is restarted
Ch□ Adaptive Control Operation Possible Deviation	Ch□ Adaptive Control Operation Possible Deviation	Specifies the range where adaptive control operation is possible. This shows the proportion of the difference between the set point and 0°C. The system performance is evaluated for adaptive control if the measured value (PV) at the start of adaptive control is outside the deviation specified by this parameter. To maintain the performance of adaptive control, do not set a value less than 50%.	500	0 to 1000	0.1%	After the Unit is restarted
Ch□ System Fluctuation Reference Deviation	Ch□ System Fluctuation Reference Deviation	This is the criterion to evaluate when to provide notification if "Adaptive Control" is set to "Notification". If the rate of change in the proportional band calculated during system performance evaluation exceeds this reference value, an occurrence of temperature variation (system fluctuation) is notified by the Adaptive Control Notification in Progress bit of "Ch□ Operating Status".	150	0 to 1000	0.1%	After the Unit is restarted

Setting name*1	Support Software display	Description	Defaul t	Set-ting range	Unit	Update tim-ing
Ch□ Sys-tem Fluctu-ation Reference Propor-tional Band	Ch□ Sys-tem Fluctu-ation Reference Propor-tional Band	This parameter is enabled only when "Adaptive Control" is set to "Notification". It is automatically calculated by the Temperature Control Unit. This is the reference proportional band to detect system fluctuations. A relative comparison is made between SP Response Proportional Band calcu-lated by adaptive control and the System Fluctua-tion Reference Proportional Band. If it equals or exceeds the System Fluctuation Reference Propor-tional Band, a system fluctuation is determined to have occurred.	0	1 to 9999	0.1 °C or 0.1 °F	The value is automati-cally set immedi-ately. The value can-not be writ-ten.
Ch□ Sys-tem Fluctu-ation Average Deviation	Ch□ Sys-tem Fluctu-ation Average Deviation	This parameter is enabled only when "Adaptive Control" is set to "Notification". It is automatically calculated by the Temperature Control Unit. It is possible to consider how much the system fluc-tuates from the fluctuation range of the proportional band.	0	0 to 10000	0.1%	The value is automati-cally set immedi-ately. The value can-not be writ-ten.
Ch□ SP Response Propor-tional Band*2	Ch□ SP Response Propor-tional Band	This is the set point response proportional band for adaptive control that is used in the transient state. When the adaptive control parameter is not set to "Disable", it is automatically calculated by AT or adaptive control. After the calculation, do not change the setting..	80	1 to 9999	0.1 °C or 0.1 °F	Immediately
Ch□ SP Response Integral Time*2	Ch□ SP Response Integral Time	This is the set point response integral time for adap-tive control that is used in the transient state. When the adaptive control parameter is not set to "Disable", it is automatically calculated by AT or adaptive control. After the calculation, do not change the setting..	2330	00 to 39999	0.1 s	Immediately
Ch□ SP Response Derivative Time*2	Ch□ SP Response Derivative Time	This is the set point response derivative time for adaptive control that is used in the transient state. When the adaptive control parameter is not set to "Disable", it is automatically calculated by AT or adaptive control. After the calculation, do not change the setting..	400	0 to 39999	0.1 s	Immediately
Ch□ SP Response Coefficient Number*2	Ch□ SP Response Coefficient Number	This is the set point response coefficient number for adaptive control that is used in the transient state. When the adaptive control parameter is not set to "Disable", it is automatically calculated by AT or adaptive control. After the calculation, do not change the setting..	0	0 to 9999	---	Immediately
Ch□ Dis-turbance Propor-tional Band*2	Ch□ Dis-turbance Propor-tional Band	This is the disturbance proportional band for adap-tive control that is used in the normal state. When the adaptive control parameter is not set to "Disable", it is automatically calculated by AT or adaptive control. After the calculation, do not change the setting..	80	1 to 9999	0.1 °C or 0.1 °F	Immediately

Setting name*1	Support Software display	Description	Defaul t	Set-ting range	Unit	Update tim-ing
Ch□ Dis-turbance Integral Time*2	Ch□ Dis-turbance Integral Time	This is the disturbance integral time for adaptive control that is used in the normal state. When the adaptive control parameter is not set to "Disable", it is automatically calculated by AT or adaptive control. After the calculation, do not change the setting..	2330	0 to 39999	0.1 s	Immediately
Ch□ Dis-turbance Derivative Time*2	Ch□ Dis-turbance Derivative Time	This is the disturbance derivative time for adaptive control that is used in the normal state. When the adaptive control parameter is not set to "Disable", it is automatically calculated by AT or adaptive control. After the calculation, do not change the setting..	400	0 to 39999	0.1 s	Immediately

*1. □ indicates the Ch number.

*2. This parameter can be accessed from the I/O data as well. Refer to *6-1-4 Method of Accessing the I/O Data for Adjustment* on page 6-31 for details.

● Precautions When You Change Set Values

When adjusting the set value of the setting item whose update timing is "Immediately" in the actual system, change this set value only and transfer it to the Unit.

Note that a restart is required after changing the set value of a setting item whose update timing is "After the Unit is restarted" and transferring it to the Unit.

● Execution Status Check

The execution status can be checked using the "Adaptive Control System Performance Evaluation State" bit of "Ch□ Operating Status" in the I/O data.

Refer to *Operating Status* on page 6-16 in *6-1-2 Details about Aggregated Data* on page 6-16 for details about the statuses.

Target NX Units

Standard control type Temperature Control Unit

Setting Method

This section gives the setting method with the Sysmac Studio.

Even when using Support Software other than Sysmac Studio, set the parameters described in the procedure on the editing screen for the Unit operation settings and transfer them to the NX Units.

For details about displaying the editing screen for the Unit operation settings when using Support Software other than Sysmac Studio and how to transfer the settings to the NX Units, refer to the operation manual for the Support Software that you are using.

1 Display the Edit Unit Operation Settings Tab Page.

For the display methods, refer to *A-8 Displaying the Edit Unit Operation Settings Tab Page* on page A-129.

2 For settings related to adaptive control of the channel being set (Ch□), select a setting item from the dropdown list or enter the set value in the text box.

Refer to *A-9 Edit Unit Operation Settings Tab Page* on page A-132 for details about the editing method for the Unit operation settings.

3 Click the Transfer to Unit Button.

The settings are transferred from the Sysmac Studio to the NX Unit.

The settings below are applied after the Unit is restarted.

- Ch☐ Adaptive Control
- Ch☐ Model Creation PV Amplitude
- Ch☐ Model Creation MV Amplitude
- Ch☐ Model Creation ON Time
- Ch☐ Model Creation OFF Time
- Ch☐ Adaptive Control Operation Possible Deviation
- Ch☐ System Fluctuation Reference Deviation
- Ch☐ System Fluctuation Reference Proportional Band
- Ch☐ System Fluctuation Average Deviation

The following settings are applied immediately.

- Ch☐ SP Response Proportional Band
- Ch☐ SP Response Integral Time
- Ch☐ SP Response Derivative Time
- Ch☐ SP Response Coefficient Number
- Ch☐ Disturbance Proportional Band
- Ch☐ Disturbance Integral Time
- Ch☐ Disturbance Derivative Time

Precautions for Safe Use

After using the Support Software to change Unit Operation Setting parameters that are applied when the Unit is restarted and transferring them to the Unit, the Unit is restarted after the transfer is completed. Always sufficiently check the safety of the connected devices before transferring the Unit operation settings.

7-5-5 Notifying the Update of Tuning Parameters

Overview and Purpose

This function notifies when the Temperature Control Unit automatically updated the tuning parameters.

It is used to evaluate whether the Unit parameters need to be saved.

Updates the tuning parameters when executing the following functions.

- AT
- Automatic Filter Adjustment
- Water cooling output adjustment function
- Adaptive control

Details on the Function

● Checking for notifications

Use the "Tuning Parameter Updated" bit of "Ch□ Operating Status" in the I/O data to check if notifications are made.

When the parameter is updated as a result of automatic tuning by the Temperature Control Unit, it is notified by setting the "Tuning Parameter Updated" bit of "Ch□ Operating Status" to "1: Tuning parameter is updated".

Refer to *Operating Status* on page 6-16 in *6-1-2 Details about Aggregated Data* on page 6-16 for details about the statuses.

● Retaining the notification status

The "Tuning Parameter Updated" bit of "Ch□ Operating Status" in the I/O data is saved in the Temperature Control Unit, even after turning the power on again or restarting the Unit.

● Resetting notifications

The notification is reset when the NX Unit parameters are saved. When the notification is reset, the "Tuning Parameter Updated" bit of "Ch□ Operating Status" in the I/O data changes to "Tuning parameter is not updated".

The method of saving the NX Unit parameters depends on the system configuration. For example, when connecting to an NX-series CPU Unit or to an EtherCAT Coupler Unit connected to an NJ/NX/NY-series controller, save the parameters using the Save NX Unit Parameters (NX_SaveParam) system control instruction.

For details about how to save the NX Unit parameters, refer to the user's manual for the connected CPU Unit or Communications Coupler Unit.

Method to Restore Tuning Parameters

If a failure occurs in the Temperature Control Unit, the tuning parameters stored in the Temperature Control Unit are lost. Therefore, in order to restore the tuning parameters, it is necessary to save them in a Unit other than the Temperature Control Unit or support software. so that they can be restored. Whether or not the following methods are available and how to perform them depends on the system configuration.

- Backup using the backup function of the NJ/NX/NY-series controller
- Saving NX Unit parameters using special instructions and messages
- Uploading slave terminal settings

For details about the controller backup function, refer to the user's manual for the connected CPU Unit or Industrial PC.

For details about how to save the NX Unit parameters, refer to the user's manual for the connected CPU Unit or Communications Coupler Unit.

For details about how to upload the slave terminal settings, refer to the user's manual for the connected Communications Coupler Unit.

Target NX Units

All Temperature Control Units

Setting Method

No setting is required.

7-6 Control Output Functions

This section describes the control output functions.

7-6-1 Control Period

Overview and Purpose

This function sets the period when changing the time ratio between ON and OFF of voltage output (for driving SSR) with time-proportional operation.

This function is available only if the Temperature Control Unit is the voltage output for driving SSR type.

This function is enabled only during PID control.

A shorter control period improves controllability. However, if you need to consider the service life of the actuator connected to the output terminal, you are recommended to change the control period according to the service life.

Details on the Function

The set control period is converted to 100% manipulated variable, and ON and OFF are output with the specified manipulated variable.

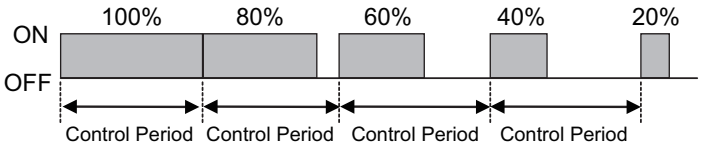

The control output ON time (Ton) is expressed by the following formula.

Ton [s] = control period [s] × manipulated variable [%] / 100

● Item

The settings are shown in the following table.

Setting name*1	Support Software display	Description	Default	Setting range	Unit	Update timing
Ch□ Control Period (Heating)	Ch□ Control Period (Heating)	Sets the control period (heating) for time-proportional output. -2: 0.1 s -1: 0.2 s 0: 0.5 s 1 to 99: 1 to 99 s	2	-2/-1/0/1 to 99	Seconds	After the Unit is restarted
Ch□ Control Period (Cooling)*2	Ch□ Control Period (Cooling)	Sets the control period (cooling) for time-proportional output. -2: 0.1 s -1: 0.2 s 0: 0.5 s 1 to 99: 1 to 99 s	2	-2/-1/0/1 to 99	Seconds	After the Unit is restarted

*1. □ indicates the Ch number.
*2. Parameter for the heating/cooling control type only.

Target NX Units

Temperature Control Unit whose output type is voltage output for driving SSR.

Setting Method

This section gives the setting method with the Sysmac Studio.

Even when using Support Software other than Sysmac Studio, set the parameters described in the procedure on the editing screen for the Unit operation settings and transfer them to the NX Units.

For details about displaying the editing screen for the Unit operation settings when using Support Software other than Sysmac Studio and how to transfer the settings to the NX Units, refer to the operation manual for the Support Software that you are using.

1 Display the Edit Unit Operation Settings Tab Page.

For the display methods, refer to *A-8 Displaying the Edit Unit Operation Settings Tab Page* on page A-129.

2 Enter a set value in the "Control Period" text box for the channel (Ch□) you want to set.

Refer to *A-9 Edit Unit Operation Settings Tab Page* on page A-132 for details about the editing method for the Unit operation settings.

3 Click the Transfer to Unit Button.

The settings are transferred from the Sysmac Studio to the NX Unit.

The settings are reflected after the Unit is restarted.

Precautions for Safe Use

After using the Support Software to change Unit Operation Setting parameters that are applied when the Unit is restarted and transferring them to the Unit, the Unit is restarted after the transfer is completed. Always sufficiently check the safety of the connected devices before transferring the Unit operation settings.

7-6-2 Minimum Output ON/OFF Band

Overview and Purpose

This function specifies the minimum ON/OFF range of the heating side control output or the cooling side control output.

This function is available only with Temperature Control Units with voltage output for driving SSR.

This function is enabled only during PID control.

This function can be used to prevent deterioration of the mechanical relay if a mechanical relay is used as the actuator connected to the control output.

You are recommended to set the minimum ON/OFF range according to the operation conditions of the external devices connected to control outputs.

Details on the Function

0% is output if the manipulated variable calculated by the Temperature Control Unit is less than the value of "Ch□ Minimum Output ON/OFF Band". ((a) in the diagram)

100% is output if the manipulated variable calculated by the Temperature Control Unit is larger than the value (100% - "Ch□ Minimum Output ON/OFF Band"). ((b) in the diagram)

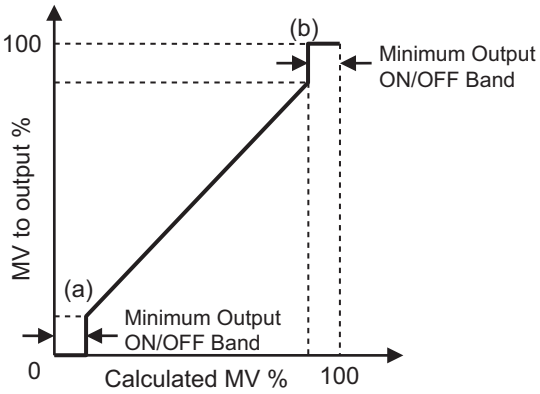

When operating with "Ch□ Heating/Cooling Tuning Method" set to "Air cooling" or "Water cooling", set "Ch□ Minimum Output ON/OFF Band" to "0". Refer to *7-4-3 Heating and Cooling Control* on page 7-32 for details about Heating/Cooling Tuning Method.

● Item

The settings are shown in the following table.

Setting name*1	Support Software display	Description	Default	Setting range	Unit	Update timing
Ch□ Minimum Output ON/OFF Band	Ch□ Minimum Output ON/OFF Band	Sets the minimum manipulated variable output by the heating side control output or the cooling side control output.	10	0 to 500	0.1%	After the Unit is restarted

*1. □ indicates the Ch number.

Target NX Units

Temperature Control Units whose output type is voltage output for driving SSR.

Setting Method

This section gives the setting method with the Sysmac Studio.

Even when using Support Software other than Sysmac Studio, set the parameters described in the procedure on the editing screen for the Unit operation settings and transfer them to the NX Units.

For details about displaying the editing screen for the Unit operation settings when using Support Software other than Sysmac Studio and how to transfer the settings to the NX Units, refer to the operation manual for the Support Software that you are using.

1 Display the Edit Unit Operation Settings Tab Page.

For the display methods, refer to *A-8 Displaying the Edit Unit Operation Settings Tab Page* on page A-129.

2 Enter a set value in the "Minimum Output ON/OFF Band" text box for the channel (Ch□) you want to set.

Refer to *A-9 Edit Unit Operation Settings Tab Page* on page A-132 for details about the editing method for the Unit operation settings.

3 Click the Transfer to Unit Button.

The settings are transferred from the Sysmac Studio to the NX Unit.

The settings are reflected after the Unit is restarted.

Precautions for Safe Use

After using the Support Software to change Unit Operation Setting parameters that are applied when the Unit is restarted and transferring them to the Unit, the Unit is restarted after the transfer is completed. Always sufficiently check the safety of the connected devices before transferring the Unit operation settings.

7-6-3 Output Signal Range Setting

Overview and Purpose

This function sets the output signal range of the linear current output. Used to set the output signal range according to actuator that is connected to output terminal.

This function is available only with the Temperature Control Unit whose output type is linear current output.

Details on the Function

The settings are shown in the following table.

Setting name*1	Support Software display	Description	Default	Setting range	Unit	Update timing
Ch□ Output Signal Range	Ch□ Output Signal Range	Sets the output signal range according to actuator that is connected to output terminal. 0: 4 to 20 mA 1: 0 to 20 mA	0	0/1	-	After the Unit is restarted

*1. □ indicates the Ch number.

Target NX Units

Temperature Control Units whose output type is linear current output.

Setting Method

This section gives the setting method with the Sysmac Studio.

Even when using Support Software other than Sysmac Studio, set the parameters described in the procedure on the editing screen for the Unit operation settings and transfer them to the NX Units.

For details about displaying the editing screen for the Unit operation settings when using Support Software other than Sysmac Studio and how to transfer the settings to the NX Units, refer to the operation manual for the Support Software that you are using.

1 Display the Edit Unit Operation Settings Tab Page.

For the display methods, refer to *A-8 Displaying the Edit Unit Operation Settings Tab Page* on page A-129.

2 Select the range from the [Output Signal Range] dropdown list for the channel (Ch□) you want to set.

Refer to *A-9 Edit Unit Operation Settings Tab Page* on page A-132 for details about the editing method for the Unit operation settings.

3 Click the Transfer to Unit Button.

The settings are transferred from the Sysmac Studio to the NX Unit.

The settings are reflected after the Unit is restarted.

Precautions for Safe Use

After using the Support Software to change Unit Operation Setting parameters that are applied when the Unit is restarted and transferring them to the Unit, the Unit is restarted after the transfer is completed. Always sufficiently check the safety of the connected devices before transferring the Unit operation settings.

7-6-4 Limiting Simultaneous Outputs

Overview and Purpose

This function limits the number of outputs that turn ON at the same time by shifting the control period of each output and restricting the maximum manipulated variable. It is used to restrict the peak current of entire actuator connected to the output terminals. Also, the delay between outputs can be set according to the operation delay of the output devices that occurs at the time of output switching.

This function is available only with the standard control type Temperature Control Units, and with Temperature Control Units with voltage output for driving SSR. This function is enabled only during PID control.

Details on the Function

When the "Ch□ Maximum Number of Simultaneous Outputs" is other than "No restriction", the control periods for control outputs of each channel on the Units with two channels are shifted by "1/2", and the control periods on the Units with four channels are shifted by "1/4". Limiting the manipulated variable restricts the number of outputs that turn ON at the same time.

The table below shows the number of outputs that turn ON simultaneously and the limits on manipulated variables for control outputs of each channel, according to the Maximum Number of Simultaneous Outputs setting.

Maximum Number of Simultaneous Outputs setting	Number of Simultaneously ON Outputs		MV limit for control output of each channel	
	Unit with 2 channels	Unit with 4 channels	Unit with 2 channels	Unit with 4 channels
No restriction	2	4	100%	
3 Output	2 *1	3	100%	75%*2
2 Output	2 *1	2	100%	50%*2
1 Output (No simultaneous ON)	1 (No simultaneous ON)		50%*2	25%*2

*1. For a Unit with two channels, operation is the same as "No restriction".

*2. When a delay between outputs is set to a value other than 0 ms, one delay between outputs period is subtracted from the manipulated variable limit.

● Manipulated variable (MV) limit for Ch1 Control Period

When the Maximum Number of Simultaneous Outputs is set to other than "No restriction", the Control periods for channel 2 to 4 become invalid and the "Ch1 Control Period" setting value is applied as the control periods of the entire Temperature Control Unit regardless of the "Ch1 Enable/Disable" and the “Ch1 PID ON/OFF” settings.

● Manipulated variable when MV limit is used

When the MV limit is enabled, the manipulated variable is restricted to whichever the smaller of the MV Upper Limit value and the MV limit for control outputs of each channel.

For example, in the 4-channel Unit, when the MV Upper Limit is set to "50%", the MV Lower Limit is set to "0%", and the Maximum Number of Simultaneous Outputs is set to "1 Output", the MV is restricted to 25%. Moreover, in such a case, when the MV Lower Limit is "30%", the MV is fixed to 25%.

● Control period when Delay between Outputs is set

This is enabled when the Maximum Number of Simultaneous Outputs setting is other than "No restriction".

When a delay between outputs is set, an output OFF section is added between the outputs of each channel.

Therefore, if a delay between outputs is set, the actual control period will be longer than the set control period.

For example, if Control Period is set to "10 s", Maximum Number of Simultaneous Outputs is set to "1 Output", and Delay between Outputs is set to "1 s (1000 ms)" on a Unit with four channels, the actual control period is 14 seconds because an output delay of 1 second is added to each of the four outputs.

● When tuning is performed

When using tuning such as autotuning, set the maximum number of simultaneous outputs before tuning.

The control performance may be reduced if this function is set after performing tuning.

● MV of a disabled channel

The MV of a channel that is set to Disabled in "Ch□ Enabled/Disabled" operates as 0.0% regardless of the restriction on the MV set by the function for limiting simultaneous outputs.

● Operation Example

Examples of operation when the Maximum Number of Simultaneous Outputs is "1 Output", "2 Output", and "3 Output" are shown below.

a) Example 1 of 1 Output

Item	Settings
number of channels	4 channels
Ch1 Control Period	10 s
Maximum Number of Simultaneous Outputs	1 Output When the actual control period is 10 seconds, the manipulated variable is limited to 25%. When the actual control period is 14 seconds, the manipulated variable is limited to 17.9%. (One second of a delay between outputs is 7.1% of the actual control period of 14 seconds.)
Delay between Outputs	1 s (1000 ms)
MV	Ch 1: 30.0%, Ch 2: 10.0%, Ch 3: 25.0%, Ch 4: 20.0%

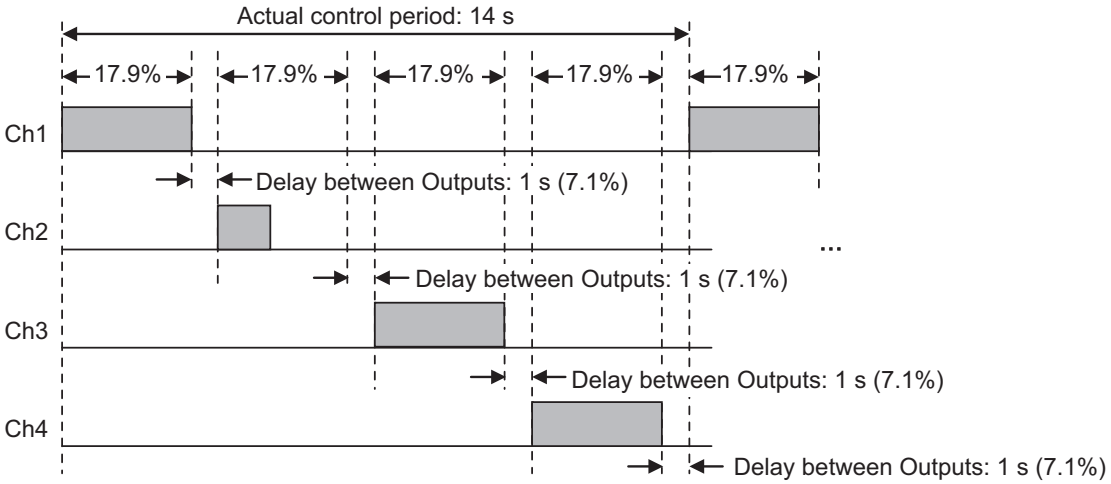

b) Example 2 of 1 Output

Item	Settings
number of channels	2 channels
Ch1 Control Period	10 s
Maximum Number of Simultaneous Outputs	1 Output When the actual control period is 10 seconds, the manipulated variable is limited to 50%. When the actual control period is 12 seconds, the manipulated variable is limited to 41.7%. (One second of a delay between outputs is 8.3% of the actual control period of 12 seconds.)
Delay between Outputs	1 s (1000 ms)
MV	Ch 1: 100.0%, Ch 2: 80.0%

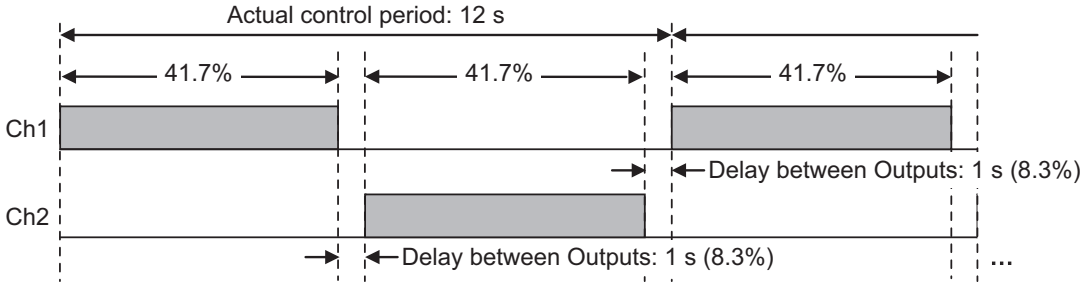

c) Example of 2 Output

Item	Settings
number of channels	4 channels
Ch1 Control Period	10 s
Maximum Number of Simultaneous Outputs	2 Outputs The MV is restricted to 50% when the control period is 10 seconds.
Delay between Outputs	0 s (0 ms)
MV	Ch 1: 60.0%, Ch 2: 55.0%, Ch 3: 50.0%, Ch 4: 100.0%

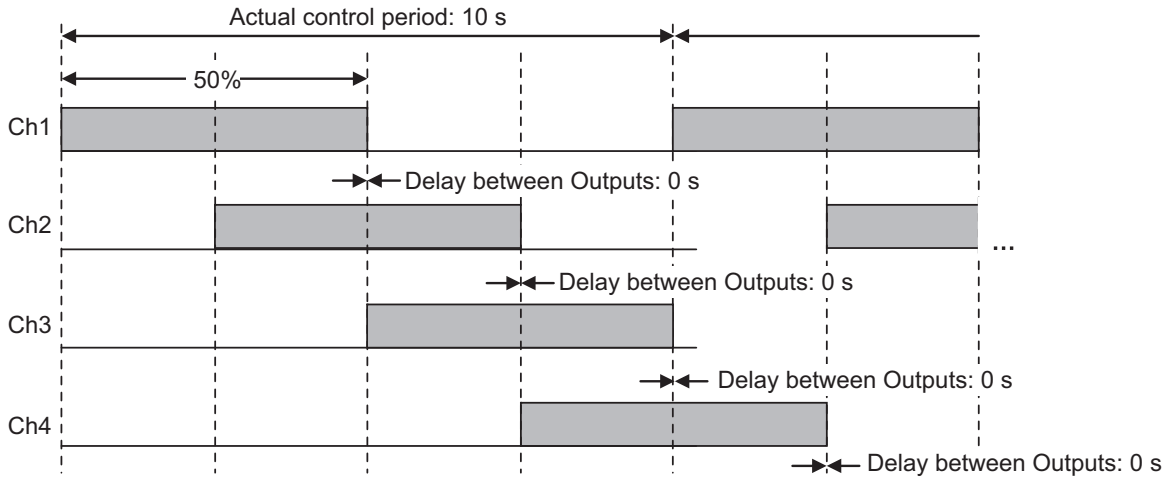

d) Example of 3 Output

Item	Settings
number of channels	4 channels
Ch1 Control Period	10 s
Maximum Number of Simultaneous Outputs	3 Output When the actual control period is 10 seconds, the manipulated variable is limited to 75%. When the actual control period is 14 seconds, the manipulated variable is limited to 67.9%. (One second of a delay between outputs is 7.1% of the actual control period of 14 seconds.)
Delay between Outputs	1 s (1000 ms)
MV	Ch 1: 100.0%, Ch 2: 80.0%, Ch 3: 75.0%, Ch 4: 100.0%

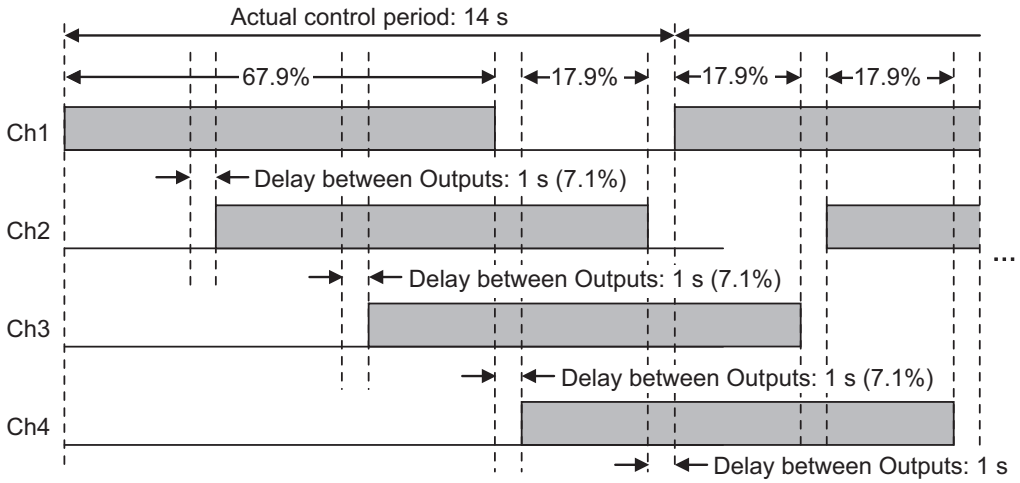

● Item

The settings are shown in the following table.

Setting name	Support Software display	Description	Default	Setting range	Unit	Update timing
Maximum Number of Simultaneous Outputs	Maximum Number of Simultaneous Outputs	Set this item to restrict the peak current of entire actuator connected to the output terminals of the Temperature Control Unit. 0: No restriction 1: 3 Output*1 2: 2 Output*1 3: 1 Output (No simultaneous ON)	0	0/1/2/3	-	After the Unit is restarted
Delay between Outputs	Delay between Outputs	This is enabled when the Maximum Number of Simultaneous Outputs setting is other than "No restriction". Set to add an OFF section between the outputs.	10	0 to 1000	ms	After the Unit is restarted

*1. When set for a 2 Ch Unit, it operates as unrestricted.

Target NX Units

Standard control type Temperature Control Units, and Temperature Control Units with voltage outputs for driving SSR.

The function does not work on the heating and cooling control type Temperature Control Units even if you made settings for it.

Setting Method

This section gives the setting method with the Sysmac Studio.

Even when using Support Software other than Sysmac Studio, set the parameters described in the procedure on the editing screen for the Unit operation settings and transfer them to the NX Units.

For details about displaying the editing screen for the Unit operation settings when using Support Software other than Sysmac Studio and how to transfer the settings to the NX Units, refer to the operation manual for the Support Software that you are using.

1 Display the Edit Unit Operation Settings Tab Page.

For the display methods, refer to *A-8 Displaying the Edit Unit Operation Settings Tab Page* on page A-129.

2 Select the [Maximum Number of Simultaneous Outputs] set value from the dropdown list. When [Maximum Number of Simultaneous Outputs] is not set to [No restriction], enter a set value in the [Delay between Outputs] text box, if necessary.

Refer to *A-9 Edit Unit Operation Settings Tab Page* on page A-132 for details about the editing method for the Unit operation settings.

3 Click the Transfer to Unit Button.

The settings are transferred from the Sysmac Studio to the NX Unit.

The settings are reflected after the Unit is restarted.

Precautions for Safe Use

After using the Support Software to change Unit Operation Setting parameters that are applied when the Unit is restarted and transferring them to the Unit, the Unit is restarted after the transfer is completed. Always sufficiently check the safety of the connected devices before transferring the Unit operation settings.

7-7 Error Detection

This section describes the error detection functions.

7-7-1 Sensor Disconnection Detection

Overview and Purpose

This function detects a temperature sensor disconnection. It also detects the measured value is outside the input indication range.

Details on the Function

- **Temperature sensor disconnection operation**

  Temperature sensor disconnections include unconnected sensors and incorrectly wired sensors.

  When a temperature sensor disconnection occurs, or the measured value is outside the input indication range, the measured value becomes the upper limit value of the input indication range.

  At this time, the "Sensor Disconnected Error" bit of "Ch□ Output and Alarm Status" for the corresponding channel turns ON and a "Sensor Disconnected Error" event (event code: 65100000 hex) occurs.

  Refer to *Output and Alarm Status* on page 6-17 in *6-1-2 Details about Aggregated Data* on page 6-16 for details about the statuses.

  Refer to *8-3-3 Event Codes and Corrections for Errors* on page 8-7 for details on events.

- **Operation when the cause of the disconnection is removed**

  When the cause of the sensor disconnection is removed, the measured value becomes the normal value and the "Sensor Disconnected Error" bit of "Ch□ Output and Alarm Status" turns OFF.

- **When an input digital filter is used**

  When the input digital filter is enabled, the disconnection detection is performed using input values before the input digital filter processing.

Target NX Units

All Temperature Control Units

Setting Method

No setting is required.

7-7-2 Heater Burnout Detection

Overview and Purpose

This function detects heater burnouts. A heater burnout is detected if the control output is ON and the heater current is equal to or less than the heater burnout detection current.

Details on the Function

● Measuring heater current

A heater burnout is detected by measuring the heater current when the control output is ON.

Connect the CT in advance and connect the heater wire to the CT.

Refer to *A-4 CT (Current Transformer)* on page A-86 for details about the current transformer (CT).

● Heater burnout detection operation

If a heater burnout occurs, the current flowing into the heater drops below the heater burnout detection current. The "Heater Burnout Detection" bit of "Ch□ Output and Alarm Status" in the I/O data turns ON and a "Heater Burnout Detected" event (event code: 652C0000 hex) occurs.

When no heater burnout occurs, the current flowing in the heater is larger than the heater burnout detection current, and the heater is evaluated as normal as power is supplied to it. The "Heater Burnout Detection" bit of "Ch□ Output and Alarm Status" turns OFF.

Refer to *Output and Alarm Status* on page 6-17 in *6-1-2 Details about Aggregated Data* on page 6-16 for details about the statuses.

Refer to *8-3-3 Event Codes and Corrections for Errors* on page 8-7 for details on events.

The table below shows the relationship between the control output and the "Heater Burnout Detection" bit.

Control output	Power to heater	"Heater Burnout Detection" bit
ON	Yes	OFF
	No (heater burnout)	ON
OFF	Yes	OFF
	No (heater burnout)	OFF

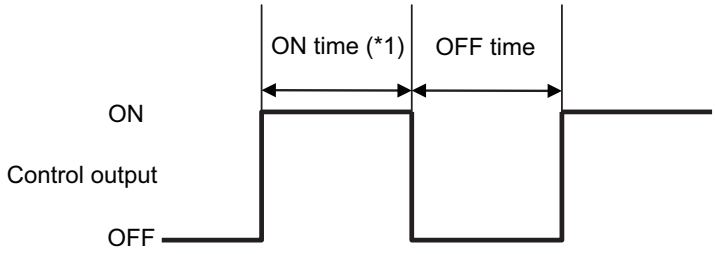

*1. Heater burnout detection is performed at the following times.

- If the control period is 500 ms or more and the control output ON time is greater than 100 ms.
- If the control period is 200 ms or less and the control output ON time is greater than 30 ms.

Settings to check operation

When "Ch□ Heater Burnout Detection Current" is set to "0.0", the "Heater Burnout Detection" bit of "Ch□ Output and Alarm Status" is forcibly turned OFF. When it is set to "50.0", the "Heater Burnout Detection" bit of "Ch□ Output and Alarm Status" is forcibly turned ON.

If the control output ON time is less than the specified time

If the control output ON time is less than the specified time, the "Heater Current Hold" bit of "Ch□ Output and Alarm Status" in the I/O data turns ON. In this case, the last measured heater current value is held in "Ch□ Heater Current" in the I/O data.

Refer to *Output and Alarm Status* on page 6-17 in *6-1-2 Details about Aggregated Data* on page 6-16 for details about the statuses.

If the heater current exceeds the measurement range

If the heater current exceeds the measurement range, the "Heater Current Exceeded" bit of "Ch□ Output and Alarm Status" in the I/O data turns ON. In this case, the upper limit value of the measurement range is applied to "Ch□ Heater Current" in the I/O data.

Refer to *Output and Alarm Status* on page 6-17 in *6-1-2 Details about Aggregated Data* on page 6-16 for details about the statuses.

Control status when a heater burnout is detected

Control continues when a heater burnout is detected.

Timing of turning ON the power supply for the heater

Turn ON the heater power supply at the same time as or before the Temperature Control Unit power supply. If the heater power is turned ON later, the "Heater Burnout Detection" bit of "Ch□ Output and Alarm Status" in the I/O data turns ON.

Precautions for Correct Use

- The actual current flowing in the heater may not match the rated current value of the heater. Use "Ch□ Heater Current" in the I/O data to check the actual current value.
- Detection may be unstable if the difference between the normal current and the current at heater burnout is small. To have stable detection, set the detection current to ensure the difference between the two current values to be 1.0 A or more for a heater operating below 10.0 A, and to 2.5 A or more for a heater operating with 10.0 or more.
  If the heater current is too small, wind the load line several times, as shown in the diagram below.
  Each turn doubles the detection current.

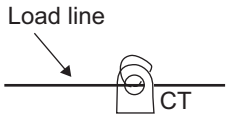

When you wind a load line through the CT hole multiple times, calculate the heater burnout detection current using the following formula.

$$\text{Half of the heater burnout detection current set value} = \frac{(\text{Normal current} + \text{Current when heater burnout occurs}) \times \text{No. of turns through CT}}{2}$$

- To meet the UL Listing requirements, use the E54-CT1L or E54-CT3L Current Transformer in condition that it is mounted at a factory of the equipment manufacturer.

Item

The settings are shown in the following table.

Setting name*1	Support Software display	Description	Default	Setting range	Unit	Update timing
Ch□ Heater Burnout Detection Current*2	Ch□ Heater Burnout Detection Current	Sets the heater burnout detection current. The heater burnout detection is output when the heater current value falls below the setting of the parameter. When the set value is "0", the "Heater Burnout Detection" bit of "Ch□ Output and Alarm Status" turns OFF. When the set value is "50", the "Heater Burnout Detection" bit turns ON.	0	0 to 50	A	Immediately

*1. □ indicates the Ch number.

*2. This parameter can be accessed from the I/O data as well. Refer to *6-1-4 Method of Accessing the I/O Data for Adjustment* on page 6-31 for details.

Precautions When You Change Set Values

When adjusting the set value of the setting item whose update timing is "Immediately" in the actual system, change this set value only and transfer it to the Unit.

Note that a restart is required after changing the set value of a setting item whose update timing is "After the Unit is restarted" and transferring it to the Unit.

How to check the current value flowing in CT

The current value flowing in the CT when the control output is ON can be checked using "Ch□ Heater Current" in the I/O data.

Refer to *6-1-1 Allocatable I/O Data* on page 6-2 for details about the heater current.

Target NX Units

Temperature Control Units with CT inputs and also whose output type is voltage output for driving SSR.

Setting Method

This section gives the setting method with the Sysmac Studio.

Even when using Support Software other than Sysmac Studio, set the parameters described in the procedure on the editing screen for the Unit operation settings and transfer them to the NX Units.

For details about displaying the editing screen for the Unit operation settings when using Support Software other than Sysmac Studio and how to transfer the settings to the NX Units, refer to the operation manual for the Support Software that you are using.

1 Display the Edit Unit Operation Settings Tab Page.

For the display methods, refer to *A-8 Displaying the Edit Unit Operation Settings Tab Page* on page A-129.

2 Enter a set value in the [Heater Burnout Detection Current] text box for the channel (Ch□) you want to set.

Refer to *A-9 Edit Unit Operation Settings Tab Page* on page A-132 for details about the editing method for the Unit operation settings.

3 Click the Transfer to Unit Button.

The settings are transferred from the Sysmac Studio to the NX Unit.

The changed settings are applied immediately.

Additional Information

It is not necessary to restart an NX Unit after changing the parameters.

7-7-3 SSR Failure Detection

Overview and Purpose

This function detects SSR failures. An SSR failure is detected if the control output is OFF and the leakage current is equal to or greater than the detection current. An SSR failure is a failure that is caused by an SSR short-circuit.

Details on the Function

● Measuring leakage current

A SSR failure is detected by measuring the leakage current when the control output is OFF.

Connect the CT in advance and connect the heater wire to the CT.

Refer to *A-4 CT (Current Transformer)* on page A-86 for details about the current transformer (CT).

● SSR failure detection operation

As a leakage current flows when the SSR fails, the current value exceeds the SSR failure detection current. The "SSR Failure Detection" bit of "Ch□ Output and Alarm Status" turns ON and a "SSR Failure Detected" event (event code: 652D0000 hex) occurs.

If the SSR does not fail, the leakage current is smaller than the SSR failure detection current, and the operation is regarded to be normal as no power is supplied to the heater. The "SSR Failure Detection" bit of "Ch□ Output and Alarm Status" turns OFF.

Refer to *Output and Alarm Status* on page 6-17 in *6-1-2 Details about Aggregated Data* on page 6-16 for details about the statuses.

Refer to *8-3-3 Event Codes and Corrections for Errors* on page 8-7 for details on events.

The table below shows the relationship between the control output and the "SSR Failure Detection" bit.

Control output	Power to heater	"SSR Failure Detection" bit
ON	Yes (SSR failure)	OFF
	No	OFF
OFF	Yes (SSR failure)	ON
	No	OFF

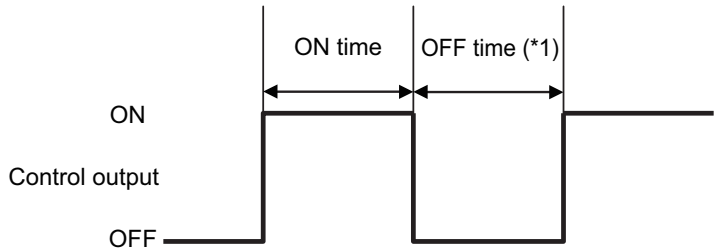

*1. SSR failure detection is performed at the following times.

- If the control period is 500 ms or more and the control output OFF time is greater than 100 ms.
- If the control period is 200 ms or less and the control output OFF time is greater than 38 ms.

Settings to check operation

When "Ch□ SSR Failure Detection Current" is set to "0.0", the "SSR Failure Detection" bit of "Ch□ Output and Alarm Status" in the I/O data is forcibly turned ON. When it is set to "50.0", the "SSR Failure Detection" bit of "Ch□ Output and Alarm Status" turns OFF.

If the control output Off time is less than the specified time

If the control output Off time is less than the specified time, the "Heater Current Hold" bit of "Ch□ Output and Alarm Status" in the I/O data turns ON. In this case, the last measured leakage current value is held in "Ch□ Leakage Current" in the I/O data.

Refer to *Output and Alarm Status* on page 6-17 in *6-1-2 Details about Aggregated Data* on page 6-16 for details about the statuses.

If the leakage current exceeds the measurement range

If the leakage current exceeds the measurement range, the upper limit value of the measurement range is applied to "Ch□ Leakage Current" in the I/O data.

Control status when an SSR failure is detected

Control continues even when an SSR failure is detected.

Precautions for Correct Use

- The actual current flowing in the heater may not match the rated current value of the heater. Use "Ch□ Leakage Current" in the I/O data to check the actual current value.
- Detection may be unstable if the difference between the normal current and the current at heater burnout is small. To have stable detection, set the detection current to ensure the difference between the two current values to be 1.0 A or more for a heater operating below 10.0 A, and to 2.5 A or more for a heater operating with 10.0 or more.
  If the heater current is too small, wind the load line several times, as shown in the diagram below.
  Each turn doubles the detection current.

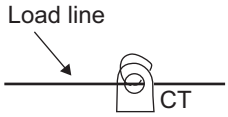

When you wind a load line through the CT hole multiple times, calculate the SSR failure detection current using the following formula.

$$\text{Half of the SSR failure detection current set value} = \frac{(\text{Leakage current when Output is OFF} + \text{Current at SSR failure}) \times \text{Number of turns}}{2}$$

- To meet UL Listing requirements, use the E54-CT1L or E54-CT3L Current Transformer in condition that it is mounted at a factory of the equipment manufacturer.

Item

The settings are shown in the following table.

Setting name*1	Support Software display	Description	Default	Setting range	Unit	Update timing
Ch□ SSR Failure Detection Current*2	Ch□ SSR Failure Detection Current	Sets the current to detect SSR failure. A SSR failure detection is output when the leakage current value exceeds this set value. When the set value is "50", the "SSR Failure Detection" bit of "Ch□ Output and Alarm Status" turns OFF. When the set value is "0", the "SSR Failure Detection" bit turns ON.	50	0 to 50	A	Immediately

*1. □ indicates the Ch number.

*2. This parameter can be accessed from the I/O data as well. Refer to *6-1-4 Method of Accessing the I/O Data for Adjustment* on page 6-31 for details.

Precautions When You Change Set Values

When adjusting the set value of the setting item whose update timing is "Immediately" in the actual system, change this set value only and transfer it to the Unit.

Note that a restart is required after changing the set value of a setting item whose update timing is "After the Unit is restarted" and transferring it to the Unit.

How to check the current value flowing in CT

The current value flowing in the CT when the control output is OFF can be checked using "Ch□ Leakage Current" in the I/O data.

Refer to *6-1-1 Allocatable I/O Data* on page 6-2 for details about the leakage current.

Target NX Units

Temperature Control Units with CT inputs and also whose output type is voltage output for driving SSR.

Setting Method

This section gives the setting method with the Sysmac Studio.

Even when using Support Software other than Sysmac Studio, set the parameters described in the procedure on the editing screen for the Unit operation settings and transfer them to the NX Units.

For details about displaying the editing screen for the Unit operation settings when using Support Software other than Sysmac Studio and how to transfer the settings to the NX Units, refer to the operation manual for the Support Software that you are using.

1 Display the Edit Unit Operation Settings Tab Page.

For the display methods, refer to *A-8 Displaying the Edit Unit Operation Settings Tab Page* on page A-129.

2 Enter a set value in the [SSR Failure Detection Current] text box for the channel (Ch□) you want to set.

Refer to *A-9 Edit Unit Operation Settings Tab Page* on page A-132 for details about the editing method for the Unit operation settings.

3 Click the Transfer to Unit Button.

The settings are transferred from the Sysmac Studio to the NX Unit.

The changed settings are applied immediately.

Additional Information

It is not necessary to restart an NX Unit after changing the parameters.

7-7-4 Temperature Alarm

Version Information

The temperature alarm function is supported in Temperature Control Units with unit version 1.1 or later.

Overview and Purpose

Function for detecting a deviation or an error in the measured value as an alarm. Alarm operation corresponding to the use can be performed by selecting “Alarm type”.

Details on the Function

● Settings of the alarm operation

Each channel has two alarm functions, and the alarm operation is set by the “Ch□ Alarm 1 Type” or “Ch□ Alarm 2 Type”. The alarm types that can be set are as shown below.

Setting value	Alarm type	Alarm function		Alarm operation
		Alarm value (X or H/L) is positive	Alarm value (X or H/L) is negative	
0	OFF	Alarm is always OFF		Alarm function OFF.
1	Upper and lower-limit *1	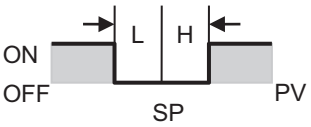	*2	The upward deviation with respect to the set point (SP) is set in alarm value upper limit (H), and the downward deviation with respect to the set point is set in alarm value lower limit (L). The alarm turns ON when the value is outside the scope of deviation.
2	Upper-limit	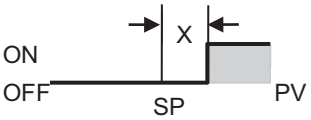	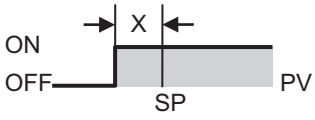	The upward deviation with respect to the set point (SP) is set in the alarm value (X). The alarm turns ON when the value exceeds the deviation.
3	Lower-limit	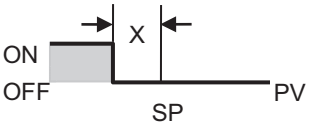	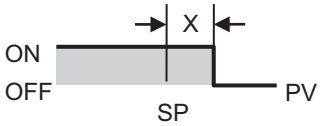	The downward deviation with respect to the set point (SP) is set in the alarm value (X). The alarm turns ON when the value is below the deviation.

Setting value	Alarm type	Alarm function		Alarm operation
		Alarm value (X or H/L) is positive	Alarm value (X or H/L) is negative	
4	Upper and lower-limit range *1	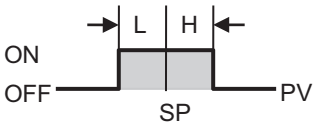	*3	The upward deviation with respect to the set point (SP) is set in alarm value upper limit (H), and the downward deviation with respect to the set point is set in alarm value lower limit (L). The alarm turns ON when the value is within the scope of deviation.
5	Upper- and lower-limit with standby sequence*1	Same as set value 1*4	*5	A standby sequence is added to the alarm operation of “1: Upper and lower-limit”.
6	Upper-limit with standby sequence	Same as set value 2		A standby sequence is added to the alarm operation of “2: Upper-limit”.
7	Lower-limit with standby sequence	Same as set value 3		A standby sequence is added to the alarm operation of “3: Lower-limit”.
8	Absolute-value upper-limit	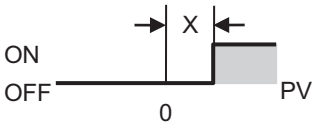	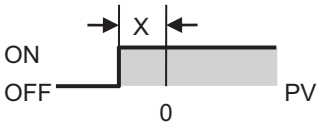	Regardless of the set point (SP), the alarm turns ON when the measured value (PV) is larger than the alarm value (X).
9	Absolute-value lower-limit	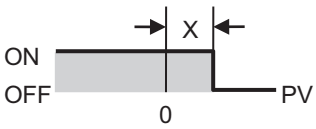	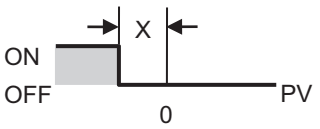	Regardless of the set point (SP), the alarm turns ON when the measured value (PV) is smaller than the alarm value (X).
10	Absolute-value upper-limit with standby sequence	Same as set value 8		A standby sequence is added to the alarm operation of “8: Absolute-value upper-limit”.
11	Absolute-value lower-limit with standby sequence	Same as set value 9		A standby sequence is added to the alarm operation of “9: Absolute-value lower-limit”.
12	LBA (Loop Burnout Alarm)	Only the Alarm 1 Type is enabled for LBA (Loop Burnout Alarm). Refer to *7-7-5 LBA (Loop Burnout Alarm)* on page 7-111 for details about this function.		

*1. The upper and lower limits can be set individually.

*2. Upper and lower-limit alarm

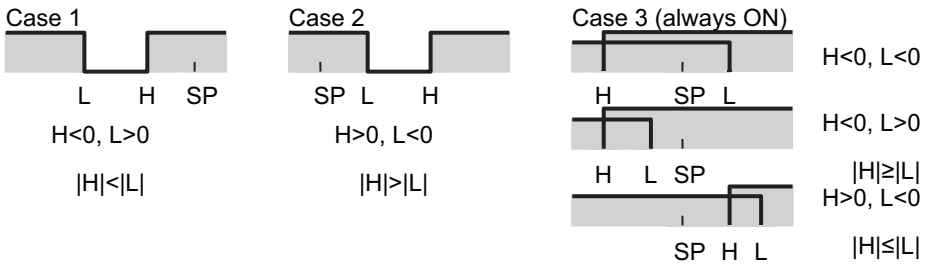

*3. Upper and lower-limit range

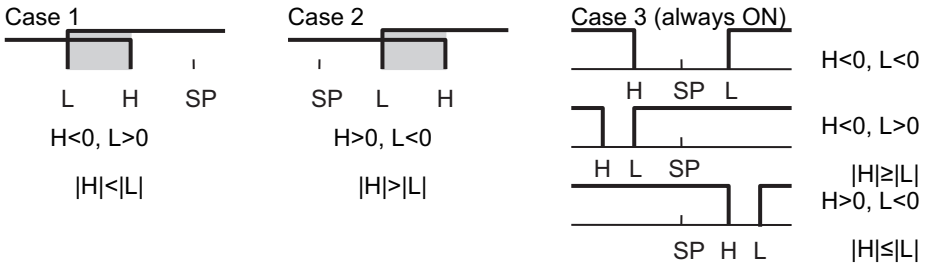

*4. Alarm with upper and lower-limit standby sequence
Always OFF when the upper-limit and lower-limit hysteresis overlap.

*5. Alarm with upper and lower-limit standby sequence
In the upper and lower-limit alarm shown above in *3,

- The alarm is always OFF in case of 1 and 2 when the upper-limit and lower-limit hysteresis overlap.
- The alarm is always OFF in case of 3.

● Alarm hysteresis

A hysteresis can be set for alarm detection during ON/OFF switching, as shown below.

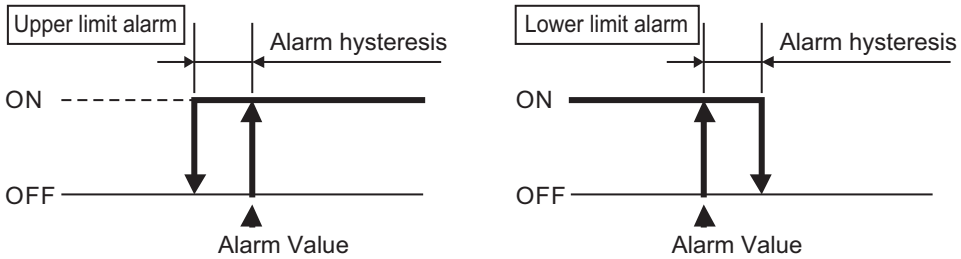

● Standby sequence

The function by which an alarm is not detected when the measured value moves out of the alarm range until it next enters back within the alarm range is called a “standby sequence”. For example, in the case of the “Lower limit”, generally, the measured value when the power supply is turned ON is smaller than the set point, and is therefore within the alarm range and an alarm is detected in such a state. Thus, if “Lower limit with standby sequence” is selected, an alarm is detected for the first time when the measured value exceeds the alarm setting value and moves out of the alarm range, and then again falls below the alarm value.

If the measured value falls outside the alarm range, the standby sequence is cleared, but thereafter, the standby sequence is restarted (reset) under the conditions described below.

- When operation is started (including when the power is turned ON and restarted), when the alarm value (alarm value upper and lower limit) or PV input shift, or PV input slope coefficient is changed, and when the set point is changed.

  Next, the operation of an alarm with a standby sequence will be shown with “5: Upper and lower-limit alarm with standby sequence” as an example.

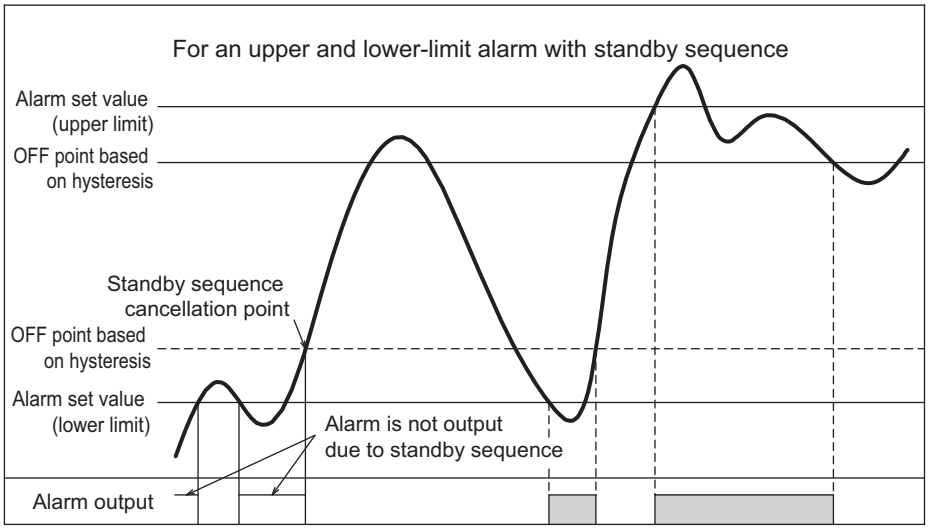

● Setting the alarm value

The alarm value implies the temperature when an alarm is detected. After setting the alarm operation based on the alarm type, set the alarm value.

The three types, namely Alarm Value (X), Alarm Value Upper Limit (H), and Alarm Value Lower Limit (L) described above in the "● Settings of the alarm operation" table are the alarm values. Set these alarm values in "Ch□ Alarm Value 1", "Ch□ Alarm Value 2", "Ch□ Alarm Value Upper Limit 1", "Ch□ Alarm Value Upper Limit 2", "Ch□ Alarm Value Lower Limit 1", or "Ch□ Alarm Value Lower Limit 2", in the I/O data.

● Alarm detection operation

When an alarm that occurs as a result of the alarm value or alarm upper and lower-limit value set in accordance with the alarm type is detected, the "Alarm 1 Detection" bit or "Alarm 2 Detection" bit of "Ch* Output and Alarm Status" of the I/O data turns ON, and the "Alarm Detection" event (event code: 652E0000 hex) occurs.

Refer to *Output and Alarm Status* on page 6-17 in *6-1-2 Details about Aggregated Data* on page 6-16 for details on the status.

Refer to *8-3-3 Event Codes and Corrections for Errors* on page 8-7 for details on events.

● Item

The settings are shown in the following table.

Setting name*1	Support Software display	Description	Default	Setting range	Unit	Update timing
Ch□ Alarm 1 Type	Ch□ Alarm 1 Type	Set the alarm type in accordance with the alarm operation. 12: Only the Alarm 1 Type is enabled for LBA (Loop Burnout Alarm).	0	0: No alarm function 1: Upper and lower-limit alarm 2: Upper-limit alarm 3: Lower-limit alarm 4: Upper and lower-limit range alarm 5: Upper and lower-limit alarm with standby sequence 6: Upper-limit alarm with standby sequence 7: Lower-limit alarm with standby sequence 8: Absolute value upper-limit alarm 9: Absolute value lower-limit alarm 10: Absolute value upper-limit alarm with standby sequence 11: Absolute value lower-limit alarm with standby sequence 12: LBA (Loop Burnout Alarm)	-	After the Unit is restarted

Setting name*1	Support Software display	Description	Default	Setting range	Unit	Update timing
Ch□ Alarm 2 Type	Ch□ Alarm 2 Type	Set the alarm type in accordance with the alarm operation. 12: Only the Alarm 1 Type is enabled for LBA (Loop Burnout Alarm).	0	0: No alarm function 1: Upper and lower-limit alarm 2: Upper-limit alarm 3: Lower-limit alarm 4: Upper and lower-limit range alarm 5: Upper and lower-limit alarm with standby sequence 6: Upper-limit alarm with standby sequence 7: Lower-limit alarm with standby sequence 8: Absolute value upper-limit alarm 9: Absolute value lower-limit alarm 10: Absolute value upper-limit alarm with standby sequence 11: Absolute value lower-limit alarm with standby sequence 12: No alarm function	-	After the Unit is restarted
Ch□ Alarm 1 Hysteresis	Ch□ Alarm 1 Hysteresis	Set the hysteresis for whether to detect an alarm when the deviation or measured value exceeds the alarm value or alarm value upper and lower limit set in accordance with the alarm type.	2	1 to 9999	0.1°C or 0.1°F	After the Unit is restarted
Ch□ Alarm 2 Hysteresis	Ch□ Alarm 2 Hysteresis		2	1 to 9999	0.1°C or 0.1°F	After the Unit is restarted

Target NX Units

All Temperature Control Units

Setting Method

This section describes the setting method with the Sysmac Studio.

Even when using Support Software other than Sysmac Studio, set the parameters described in the procedure on the editing screen for the Unit operation settings and transfer them to the NX Units.

For details about displaying the editing screen for the Unit operation settings when using Support Software other than Sysmac Studio and how to transfer the settings to the NX Units, refer to the operation manual for the Support Software that you are using.

1 Display the Edit Unit Operation Settings Tab Page.

For the display methods, refer to *A-8 Displaying the Edit Unit Operation Settings Tab Page* on page A-129.

2 For settings related to the temperature alarm of the channel being set (Ch□), select a setting item from the dropdown list or enter the set value in the text box.

Refer to *A-9 Edit Unit Operation Settings Tab Page* on page A-132 for details about the editing method for the Unit operation settings.

3 Click the Transfer to Unit Button.

The settings are transferred from the Sysmac Studio to the NX Unit.

The settings are reflected after the Unit is restarted.

Precautions for Safe Use

After using the Support Software to change Unit Operation Setting parameters that are applied when the Unit is restarted and transferring them to the Unit, the Unit is restarted after the transfer is completed. Always sufficiently check the safety of the connected devices before transferring the Unit operation settings.

7-7-5 LBA (Loop Burnout Alarm)

Version Information

The LBA (Loop Burnout Alarm) function is supported by Temperature Control Units with unit version 1.1 or later.

Overview and Purpose

Function to detect an alarm, assuming that there is an error somewhere in the control loop, if the measured value does not change in a state where there is a control deviation equal to or greater than the threshold value between the set point and the measured value.

It can be used as the detection means when the temperature control loop does not operate normally.

Details on the Function

● Using LBA

LBA can be used only with Alarm 1. Set “Ch□ Alarm 1 Type” to “12: LBA (Loop Burnout Alarm)”. If you set other than “12: LBA (Loop Burnout Alarm)”, LBA will be disabled. Also, if you set the setting value “12: LBA (Loop Burnout Alarm)” in “Ch□ Alarm 2 Type”, alarm 2 will be disabled. For details on “Ch□ Alarm 1 Type”, refer to *7-7-4 Temperature Alarm* on page 7-105.

LBA detection operation

When a loop burnout is detected by LBA, the “Alarm 1 Detection” bit of "Ch□ Output and Alarm Status" in the I/O data turns ON. Refer to *Output and Alarm Status* on page 6-17 in *6-1-2 Details about Aggregated Data* on page 6-16 for details on the status.

Execution condition

This function can be executed when the Temperature Control Unit is operating under the following conditions.

It cannot be executed if any of the conditions is not satisfied.

Operating condition	Setting item and status to check the operating condition
AT Stopping	"100 Percent AT Status" bit of "Ch□ Operating Status" is "0: 100% AT Stopping" and the "40 Percent AT Status" bit of "Ch□ Operating Status" is "0: 40% AT Stopping".
Auto mode	“Auto or Manual Status" bit of "Ch□ Operating Status" is "0: Auto mode".
Running	“Run or Stop Status" bit of "Ch□ Operating Status" is "0: Run".
MV branch operation is disabled or the local channel is selected	“Ch□ MV Branch Operation” is “Disable” or the local channel is selected.

LBA parameters

There are some parameters that can be set in LBA and some that cannot be set.

Parameter	Description	Feasibility of changing setting value	Method of setting the setting value
LBA detection time	The time interval when an LBA is detected.	Possible.	• Automatic setting based on AT results*1 • Manual setting
LBA detection threshold	The threshold for determining the temperature range in which LBA detection is not performed. Set point ± LBA detection threshold is the temperature range.	Not Possible	No
LBA detection width	The temperature width in which LBA detection is performed. An LBA is detected if the variation in the measured value is less than the detected width when the LBA detection time has elapsed.	Not Possible	No

*1. If you are using a method for making automatic settings based on the AT results, either implement AT beforehand, or set the same setting value as the AT results in the same Temperature Control System. The AT results in this section indicate the setting value of the proportional band, derivative time, MV limit, and the Limiting Simultaneous Outputs function.

The details of each parameter are described after the operation example.

Operation Example

An operation example and description of the operation of LBA are provided below.

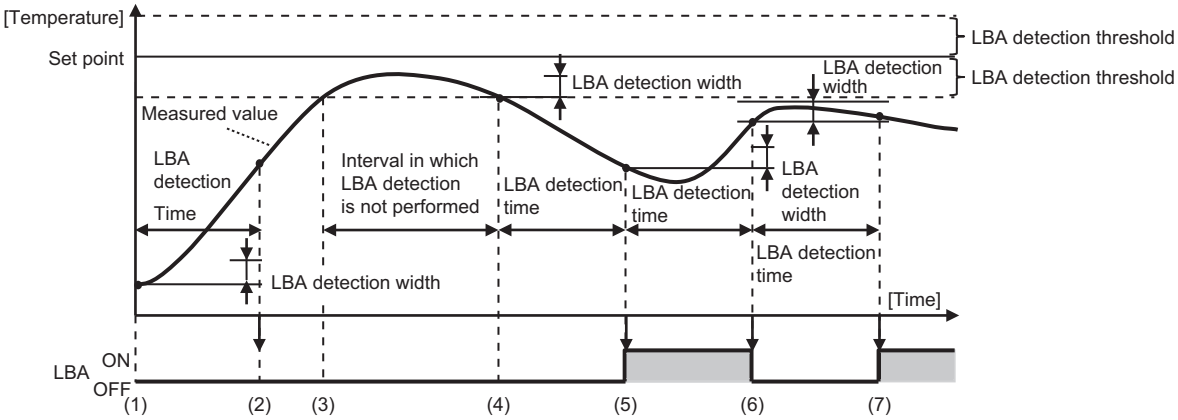

Interval	LBA	Description of operation
(1) to (2)	OFF	Since the control deviation reduces (approaches the set point), and the reduction width of the control deviation is larger than the “LBA detection width”, LBA continues to be OFF.
(3) to (4)	OFF	Since the measured value is within the “LBA detection threshold”, LBA detection is not performed. (LBA continues to be OFF.)
(4) to (5)	OFF to ON	Since the measured value is outside the “LBA detection threshold”, and a reduction in the control deviation that is larger than the “LBA detection width” is not seen within the LBA detection time, LBA turns ON.
(5) to (6)	ON to OFF	Since the control deviation is in a direction approaching the set point, and the control deviation is reduced by more than the “LBA detection width”, LBA turns OFF.
(6) to (7)	OFF to ON	Although the control deviation is in a direction approaching the set point, the reduction width of the control deviation is smaller than the “LBA detection width”, LBA turns ON.

LBA detection time

The time interval when an LBA is detected after the measured value moves outside the range of the LBA detection threshold. Normally, if the measured value is outside the range of the LBA detection threshold, it rises or falls after an unnecessary amount of time has elapsed. LBA turns ON unless the measured value changes in the expected direction after the lapse of a fixed period of time (LBA detection time). The LBA detection time is set automatically based on the AT results. However, in the case of heating/cooling control type and ON/OFF control, automatic settings cannot be made based on the AT results. Therefore, if automatic settings cannot be made, make the manual settings shown below.

a) Method of making manual settings of the LBA detection time

Set a value that is twice the measured time (Tm) calculated by the method described below in “Ch□ Alarm Value 1” as the “LBA detection time”.

If the value exceeds the setting range of the LBA detection time, it is restricted by the setting range.

1 Maximize the output.

2 Measure the time period until the input change width reaches the LBA detection width.

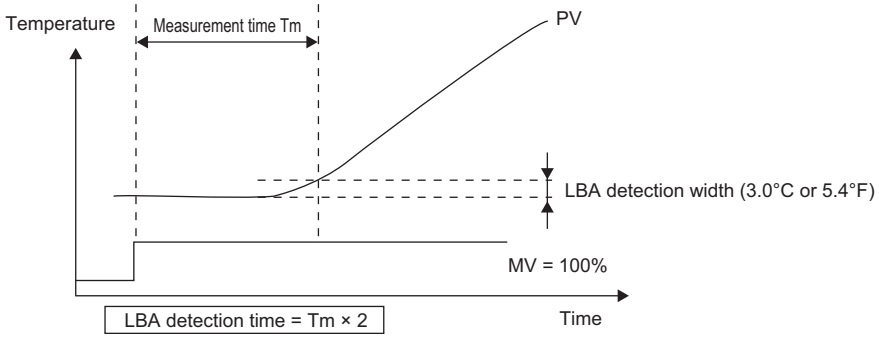

3 Set a value that is twice the measured time as the “LBA detection time”.

4 Set “LBA detection time” in “Ch□ Alarm Value 1” of I/O data.

The set LBA detection time is applied instantaneously.

The setting items of “Ch□ Alarm 1” are shown below.

Data name	Support Software display	Description	Default	Setting range	Unit
Ch□ Alarm Value 1	Ch□ Alarm Value 1	This is the alarm value 1. If you are using LBA (Loop Burnout Alarm), you can set the LBA detection time manually. To prioritize automatic setting of the LBA detection time based on the AT results, leave the value as “0”.	0	-3200 to 3200	*1

*1. The unit becomes as shown below depending on the setting of Ch□ Alarm 1 type.

Ch□ Alarm 1 Type Setting	Unit
1 to 11: Temperature alarm	°C or °F Follows the “Ch□ Temperature Unit” setting.
12: LBA (Loop Burnout Alarm)	Seconds

If “1” or a higher value is set in “Ch□ Alarm Value 1”, it is given priority over the value set automatically based on the AT results, and is reflected in the LBA detection time of the Temperature Control Unit. If a value less than “1” is set in “Ch□ Alarm Value 1”, the value set automatically based on the AT results is reflected in the LBA detection time of the Temperature Control Unit. However, in the case of heating/cooling control type or ON/OFF control, the LBA detection time is reflected in the operation of the Temperature Control Unit as “0: Disable function”.

Additional Information

The LBA detection time is an unpublished parameter. To understand the LBA detection time when it is set automatically based on the AT results, perform the calculation by the calculation formula shown below. If the calculation result exceeds 9999 seconds, it is restricted to 9999 seconds. If the calculation result is “0”, the function is disabled.

LBA detection time = 2 × Derivative time + 4800 × Derivative time / ((Maximum value of the output manipulated variable - Minimum value of the output manipulated variable) × Proportional band)

If the calculation result is “0”, the function is disabled.

The maximum value or minimum value of the output manipulated variable implies the manipulated variable that is restricted by the MV limit and the Limiting Simultaneous Outputs function.

Calculation example 1) When the AT results that form the basis of the automatic setting are in the factory default state

- Conditions

Item	Description
Derivative Time	40.0 s
Proportional Band	8.0°C
MV Upper Limit	100%
MV Lower Limit	0%

- Calculation formula

  LBA detection time = 2 × 40 + 4800 × 40 / (100 × 8) = 320 seconds

Calculation example 2) When the AT results that form the basis of the automatic setting are in other than the factory default state

- Conditions

Item	Description
Derivative Time	10.0 s
Proportional Band	20.0°C
MV Upper Limit	80%
MV Lower Limit	20.00%

- Calculation formula

  LBA detection time = 2 × 10 + 4800 × 10 / ((80 - 20) × 20) = 60 seconds

Timing of resetting the calculation of the LBA detection time

The timing of resetting of the calculation of the LBA detection time, and recalculation is described below.

- When the measured value moves out of the range from within the temperature range of the LBA detection threshold
- When the measured value is outside the range of the LBA detection threshold, and a value is set in “Ch□ Alarm Value 1” in the manual setting during the LBA operation.
- When the set value of the proportional band, derivative time, or MV limit is changed
- When the execution conditions are satisfied

LBA detection threshold

The threshold for determining the temperature range in which LBA detection is not performed. Set point ± LBA detection threshold is the temperature range.

An area where LBA cannot be detected is provided so that if a large disturbance occurs right in the middle of setting the measured value as the set point, LBA is not detected erroneously due to the continuance of the state when the manipulated value is maximum or minimum for a fixed period as a result of the disturbance response.

The LBA detection threshold is an unpublished parameter. This data cannot be set and checked.

The LBA detection threshold is fixed as 8.0°C if the temperature unit is Celsius, and as 14.4°F if the temperature unit is Fahrenheit.

● LBA detection width

The temperature width for performing LBA detection.

Since the variation in the measured value is high due to control characteristics, the LBA operation becomes unstable. The LBA detection width is provided for correctly detecting changes in the manipulated variable. If the temperature variation is smaller than the LBA detection width at the time the LBA detection time elapses, it is considered to “Not change in the expected direction”, and the LBA turns ON.

The LBA detection width is an unpublished parameter. This data cannot be set and checked.

The LBA detection width is fixed as 3.0°C if the temperature unit is Celsius, and as 5.4°F if the temperature unit is Fahrenheit.

● Restrictions

The following limits are applied when you use LBA.

Item	Details of limit
Restrictions concerning automatic settings based on AT results	If you are using LBA, check the operation thoroughly. If you are using the method for making automatic settings based on the AT results, some control loops may not be able to detect expected errors, while some control loops may detect unexpected states as an error. If the operations are not as expected, use the method of making manual settings. Moreover, after using the method for making automatic settings based on the AT results, you may not be able to detect expected errors, or may detect unexpected states as an error if the following setting values are changed. In such cases too, use the method of making manual settings. Proportional Band • Derivative Time • MV Upper Limit • MV Lower Limit • Maximum Number of Simultaneous Outputs
Restrictions when another output is interfering	If another output is interfering and exerting an effect, such as when you are using the MV branch function, you may not be able to detect expected errors, or may detect unexpected states as an error.
Restrictions on disturbances	If unexpected excessively large disturbance occurs continuously in the Temperature Control Unit, and the large deviation does not reduce, LBA may be detected.
Restrictions concerning the set point	• If the set point is close to the ambient temperature, a deviation in a normal state may be within the LBA detection threshold even in the case of a burnout failure, and may not be detected. • If an excessively large or excessively small set point that cannot be reached even at the maximum or minimum manipulated variable is set, the control deviation in the normal state is retained and LBA may be detected.
Restrictions concerning the failure mode	• The failure mode in the temperature-rise direction during the temperature-rise control cannot be detected. Example: SSR short-circuit failure • The failure in the temperature-drop direction during the temperature-drop control cannot be detected. Example: Heater burnout failure

Target NX Units

All Temperature Control Units

8

Troubleshooting

This section provides error information and corrections for errors that can occur when the Temperature Control Units are used.

8-1 How to Check for Errors 8-2

8-2 Checking for Errors with the Indicators 8-3

8-3 Checking for Errors and Troubleshooting on the Support Software 8-5

8-3-1 Checking for Errors from the Sysmac Studio 8-5

8-3-2 Checking for Errors from Support Software Other Than the Sysmac Studio . . 8-6

8-3-3 Event Codes and Corrections for Errors 8-7

8-3-4 Meaning of Error 8-14

8-4 Resetting Errors 8-32

8-5 Unit-specific Troubleshooting 8-33

8-6 Troubleshooting Flowchart 8-36

8-1 How to Check for Errors

Use one of the following error checking methods.

- Checking the indicators
- Troubleshooting with Support Software

Refer to the user's manual for the connected CPU Unit or Communications Coupler Unit for information on checking errors with the troubleshooting functions of the Support Software.

8-2 Checking for Errors with the Indicators

You can use the TS indicators on the Temperature Control Units to check the Temperature Control Unit status and level of errors.

This section describes the meanings of errors that the TS indicator shows and the troubleshooting procedures for them.

In this section, the status of the indicator is indicated with the following abbreviations.

Abbreviation	Indicator status
Lit	Lit
Not Lit	Not lit
FS ( )	Flashing. The numeric value in parentheses is the flashing interval.
---	Undefined

Main Errors and Corrections

TS indicator		Cause	Correction
Green	Red		
Lit	Not Lit	---	--- (This is the normal status.)
FS (2 s)	Not Lit	• Initializing • Downloading	--- (Normal. Wait until the processing is completed.)
Lit	Lit	This status is not present.	
Not Lit	Not Lit	The Unit power supply is not supplied.	Check the following items and supply the Unit power supply correctly. [Check items for power supply] • Make sure that the power supply cable is wired correctly. • Make sure that the power supply cable is not disconnected. • Make sure that power supply voltage is within the specified range. • Make sure that the power supply has enough capacity. • Make sure that power supply has not failed.
		• Waiting for initialization start • Restarting	--- (Normal. Wait until the processing is completed.)
		If you cannot resolve the problem after you check the above items and cycle the Slave Terminal power supply, the Unit may have a hardware failure. If this happens, replace the Unit.	
Not Lit	Lit	Hardware failure	If this error occurs after you cycle the Slave terminal power supply, replace the Unit.
Not Lit	Lit	Non-volatile Memory Hardware Error	Refer to Event *Non-volatile Memory Hardware Error* on page 8-15.
Not Lit	Lit	Control Parameter Error in Master	Refer to Event *Control Parameter Error in Master* on page 8-18.
Not Lit	Lit	NX Unit Processing Error	Refer to Event *NX Unit Processing Error* on page 8-20.
Not Lit	Lit	A/D Converter Error	Refer to Event *A/D Converter Error* on page 8-16.

TS indicator		Cause	Correction
Green	Red		
Not Lit	Lit	NX Unit Clock Not Synchronized Error	Refer to Event *NX Unit Clock Not Synchronized Error* on page 8-27.
Not Lit	FS (1 s)	NX Unit I/O Communications Error	Refer to Event *NX Unit I/O Communications Error* on page 8-25.
The indicator status is held immediately before the event occurred.		Cold Junction Sensor Error	Refer to Event *Cold Junction Sensor Error* on page 8-17.
		Sensor Disconnected Error	Refer to Event *Sensor Disconnected Error* on page 8-21.
		Heater Burnout Detected	Refer to Event *Heater Burnout Detected* on page 8-22.
		SSR Failure Detected	Refer to Event *SSR Failure Detected* on page 8-23.
		NX Message Communications Error	Refer to Event *NX Message Communications Error* on page 8-28.
		Alarm detection	Refer to Event *Alarm detection* on page 8-4.

8-3 Checking for Errors and Troubleshooting on the Support Software

Error management on the NX Series is based on the methods used for the NJ/NX/NY-series Controllers.

This allows you to use the Support Software to check the meanings of errors and troubleshooting procedures.

The confirmation method depends on the Support Software that you use.

8-3-1 Checking for Errors from the Sysmac Studio

When an error occurs, you can place the Sysmac Studio online to the Controller or the Communications Coupler Unit to check current Controller errors and the log of past Controller errors.

Refer to the user's manual for the connected CPU Unit or Communications Coupler Unit for details on how to check errors.

Current Errors

Open the Sysmac Studio's Controller Error Tab Page to check the current error's level, source, source details, event name, event codes, details, attached information 1 to 4, and correction.

Errors in the observation level are not displayed.

Additional Information

Number of Current Errors

Up to 15 errors can be reported simultaneously as the current errors in the Temperature Control Unit.

If the number of errors exceeds the maximum number of reportable current errors, errors are reported with a priority given to the oldest and highest-level errors. Errors that exceed the limit on simultaneous error notifications are not reported.

Errors that are not reported are still reflected in the error status.

Log of Past Errors

Open the Sysmac Studio's Controller Event Log Tab Page to check the times, levels, sources, source details, event names, event codes, details, attached information 1 to 4, and corrections for previous errors.

Additional Information

Number of Logs of Past Errors

Event logs in the Temperature Control Units are stored in the Temperature Control Unit itself.

The system event log can record 15 events. The access event log can record 6 events.

Refer to the troubleshooting manual for the connected CPU Unit or Industrial PC and the *Sysmac Studio Version 1 Operation Manual* (Cat. No. W504) for the items that you can check and the procedures to check for errors.
Refer to *8-3-3 Event Codes and Corrections for Errors* on page 8-7 for details on event codes.

8-3-2 Checking for Errors from Support Software Other Than the Sysmac Studio

You can check the error descriptions and logs with Support Software other than the Sysmac Studio. For the error checking methods, refer to the user's manual for the connected Communications Coupler Unit and the operation manual for the Support Software.
Refer to *8-3-3 Event Codes and Corrections for Errors* on page 8-7 for information on event codes.

The number of current errors and the number of error log errors that occurred in the past in a Temperature Control Unit is the same as for the Sysmac Studio.

8-3-3 Event Codes and Corrections for Errors

The errors (i.e., events) that can occur in the Temperature Control Units are given on the following pages.

The following abbreviations are used in the event level column.

Abbreviation	Name
Maj	Major fault level
Prt	Partial fault level
Min	Minor fault level
Obs	Observation
Info	Information

Symbol	Meaning
S	Event levels that are defined by the system.
U	Event levels that can be changed by the user. *1

*1. This symbol appears only for events for which the user can change the event level.

Refer to the troubleshooting manual for the connected CPU Unit or Industrial PC for information on NJ/NX/NY-series event codes.

Event code	Event name	Meaning	Assumed cause	Level					Reference
				Maj	Prt	Min	Obs	Info	
00200000 hex	Non-volatile Memory Hardware Error	An error occurred in non-volatile memory.	• Non-volatile memory failure.			S			P. 8-15
05100000 hex	A/D Converter Error	An error occurred in the A/D converter	• Noise • A/D converter failure			S			P. 8-16
05110000 hex	Cold Junction Sensor Error	The temperature cannot be converted because the cold junction sensor is disconnected.	• There is a faulty connection to the cold junction sensor. • The cold junction sensor failed.			S	U		P. 8-17
10410000 hex	Control Parameter Error in Master	An error occurred in the control parameters that are saved in the master.	For the NX bus of CPU Units • The power supply to the CPU Unit was turned OFF while writing the Unit operation settings was in progress. Or there is an error in the area of the non-volatile memory in the CPU Unit in which the Unit operation settings for the relevant NX Unit are saved. For Communications Coupler Units • The power supply to the Communications Coupler Unit was turned OFF while writing the Unit operation settings was in progress. Or there is an error in the area of the non-volatile memory in the Communications Coupler Unit in which the Unit operation settings for the relevant NX Unit are saved.			S			P. 8-18
14C10000 hex	Invalid Tuning Parameters Saved in the Unit	Failed to write the tuning result to the non-volatile memory, the tuning parameters saved in the Unit became invalid.	• Power was turned OFF during tuning.			S			P. 8-19
40200000 hex	NX Unit Processing Error	A fatal error occurred in an NX Unit.	• An error occurred in the software.			S			P. 8-20

Event code	Event name	Meaning	Assumed cause	Level					Reference
				Maj	Prt	Min	Obs	Info	
6510 0000 hex	Sensor Disconnected Error	A disconnected temperature sensor was detected.	• The temperature sensor is damaged or the wires are broken. • An unused channel is not disabled. • The wiring of the temperature sensor is incorrect. • The input type is not set correctly. • The measured value exceeds the input indication range. • The PV input shift value or PV input slope coefficient is not set correctly.			S	U		P. 8-21
652C 0000 hex	Heater Burnout Detected	A heater burnout was detected.	• A heater was burned out or damaged. • The setting of the Heater Burnout Detection Current is too high. • A CT input that is not used is allocated to a control output in the CT Allocation setting when this error occurs in the Heater Burnout Detection Unit. • An unused channel is not disabled when this error occurs in the Temperature Control Unit.			S	U		P. 8-22

Event code	Event name	Meaning	Assumed cause	Level					Reference
				Maj	Prt	Min	Obs	Info	
652D0000 hex	SSR Failure Detected	An SSR failure was detected.	• The SSR was short-circuited or damaged. • The setting of the SSR Failure Detection Current is too small. • A CT input that is not used is allocated to a control output in the CT Allocation setting when this error occurs in the Heater Burnout Detection Unit. • An unused channel is not disabled when this error occurs in the Temperature Control Unit.			S	U		P. 8-23
652E0000 Hex	Alarm detection	The alarm set in the alarm type is detected.	An alarm that has occurred as a result of the relationship between the following values set in accordance with the alarm type and the deviation or the measured values is detected. • Alarm Value • Alarm value upper limit and alarm value lower limit The following values set in accordance with the alarm type do not match the alarm to be detected. • Alarm Value • Alarm value upper limit and alarm value lower limit			S	U		P. 8-24

Event code	Event name	Meaning	Assumed cause	Level					Reference
				Maj	Prt	Min	Obs	Info	
80200000 hex	NX Unit I/O Communications Error	An I/O communications error occurred in an NX Unit.	For the NX bus of CPU Units • An error that prevents normal NX bus communications occurred in a CPU Unit. • An NX Unit is not mounted properly. • The power cable for the Unit power supply is disconnected, or the wiring from the Unit power supply to the NX Units is incorrect. • The power cable for the Unit power supply is broken. • The voltage of the Unit power supply is outside the specified range, or the capacity of the Unit power supply is insufficient. • There is a hardware error in an NX Unit. For Communications Coupler Units • An error that prevents normal NX bus communications occurred in a Communications Coupler Unit. • The NX Unit is not mounted properly. • The power cable for the Unit power supply is disconnected. Or, the wiring from the Unit power supply to the NX Units is incorrect. • The power cable for the Unit power supply is broken. • The voltage of the Unit power supply is outside the specified range. Or, the capacity of the Unit power supply is insufficient. • There is a hardware error in the NX Unit.			S			P. 8-25

Event code	Event name	Meaning	Assumed cause	Level					Reference
				Maj	Prt	Min	Obs	Info	
8024 0000 hex	NX Unit Clock Not Synchronized Error	A time information error occurred in an NX Unit.	For the NX bus of CPU Units • There is a hardware error in an NX Unit. • There is a hardware error in a CPU Unit. For Communications Coupler Units • There is a hardware error in an NX Unit. • There is a hardware error in an EtherCAT Coupler Unit.			S			P. 8-27
8022 0000 hex	NX Message Communications Error	An error was detected in message communications and the message frame was discarded.	For the NX bus of CPU Units • The message communications load is high. For Communications Coupler Units • The message communications load is high. • The communications cable is disconnected or broken. • Message communications were cutoff in communications.				S		P. 8-28
9040 0000 hex	Event Log Cleared	The event log was cleared.	• The event log was cleared by the user.					S	P. 8-29
94D0 0000 hex	Tuning Parameter Updated	The parameters were updated by tuning.	Tuning of one of the following functions by the user operation was completed normally and the tuning parameters were updated. • AT • Automatic filter adjustment • PID update by Adaptive control with the Notification					S	P. 8-29
94D1 0000 hex	Related Parameters Initialized	Related parameters were initialized by parameter changes.	• The model parameters of adaptive control were initialized because either the input type parameter or the temperature unit parameter had been changed.					S	P. 8-30

Event code	Event name	Meaning	Assumed cause	Level					Reference
				Maj	Prt	Min	Obs	Info	
94F0 0000 hex	Tuning Parameter Automatically Updated	The parameters were automatically updated by tuning.	Tuning by automatic execution of the following functions was completed normally, and the tuning parameters were updated. • Water-cooling output adjustment • Adaptive control with the Automatic update					S	P. 8-31

8-3-4 Meaning of Error

This section describes the information that is given for individual errors.

How to Read Error Descriptions

The items that are used to describe individual errors (events) are described in the following copy of an error table.

Event name	Gives the name of the error.			**Event code**	Gives the code of the error.	
Meaning	Gives a short description of the error.					
Source	Gives the source of the error.		**Source details**	Gives details on the source of the error.	**Detection timing**	Tells when the error is detected.
Error attributes	**Level**	Tells the level of influence on control.*1		**Log category**	Tells which log the error is saved in.*2	
	Recovery	Gives the recovery method.*3				
Effects	**User program**	Tells what will happen to execution of the user program.*4	**Operation**	Provides special information on the operation that results from the error.		
Indicators	Gives the status of the built-in EtherNet/IP port and built-in EtherCAT port indicators. Indicator status is given only for errors in the EtherCAT Master Function Module and the EtherNet/IP Function Module.					
System-defined variables	**Variable**		**Data type**		**Name**	
	Lists the variable names, data types, and meanings for system-defined variables that provide direct error notification, that are directly affected by the error, or that contain settings that cause the error.					
Cause and correction	**Assumed cause**		**Correction**		**Prevention**	
	Lists the possible causes, corrections, and preventive measures for the error.					
Attached information	This is the attached information that is displayed by the Support Software or an HMI.*5,*6					
Precautions/ Remarks	Provides precautions, restrictions, and supplemental information. If the user can set the event level, the event levels that can be set, the recovery method, operational information, and other information are also provided.					

*1. One of the following:
Major fault: Major fault level
Partial fault: Partial fault level
Minor fault: Minor fault level
Observation
Information

*2. One of the following:
System: System event log
Access: Access event log

*3. One of the following:
Automatic recovery: Normal status is restored automatically when the cause of the error is removed.
Error reset: Normal status is restored when the error is reset after the cause of the error is removed.
Cycle the power supply: Normal status is restored when the power supply to the Controller is turned OFF and then back ON after the cause of the error is removed.
Controller reset: Normal status is restored when the Controller is reset after the cause of the error is removed.
Depends on cause: The recovery method depends on the cause of the error.

*4. One of the following:
Continues: Execution of the user program will continue.
Stops: Execution of the user program stops.
Starts: Execution of the user program starts.

*5. “System information” indicates internal system information that is used by OMRON.

*6. Refer to the appendices of the troubleshooting manual for the connected CPU Unit or Industrial PC for the applicable range of the HMI Troubleshooter.

Error Descriptions

Event name	Non-volatile Memory Hardware Error		**Event code**	00200000 hex	
Meaning	An error occurred in non-volatile memory.				
Source	Depends on where the Support Software is connected and the system configuration.	**Source details**	NX Unit	**Detection timing**	When power is turned ON to the NX Unit
Error attributes	**Level**	Minor fault	**Log category**	System	
	Recovery	For the NX bus of CPU Units Cycle the power supply to the Unit or restart the NX bus. For Communications Coupler Units Cycle the power supply to the Unit or restart the Slave Terminal. If the errors are detected in the Controller, reset all of the errors in the Controller.			
Effects	**User program**	Continues.	**Operation**	I/O refreshing for the NX Unit stops. Messages cannot be sent to the NX Unit.	
System-defined variables	**Variable**		**Data type**	**Name**	
	None		---	---	
Cause and correction	**Assumed cause**		**Correction**	**Prevention**	
	Non-volatile memory failure.		For the NX bus of CPU Units Cycle the power supply to the Unit or restart the NX bus. If the error persists even after you make the above correction, replace the relevant NX Unit. For Communications Coupler Units Cycle the power supply to the Unit or restart the Slave Terminal. If the error persists even after you make the above correction, replace the relevant NX Unit.	None	
Attached information	None				
Precautions/ Remarks	None				

Event name	A/D Converter Error		**Event code**	05100000 hex	
Meaning	An error occurred in the A/D converter				
Source	Depends on where the Support Software is connected and the system configuration.	**Source details**	NX Unit	**Detection timing**	Continuously
Error attributes	**Level**	Minor fault	**Log category**	System	
	Recovery	Reset error in the NX Unit.			
Effects	**User program**	Continues.	**Operation**	The measured value will be the maximum value in the input indication range.	
Sys-tem-defined variables	**Variable**		**Data type**	**Name**	
	None		---	---	
Cause and correction	**Assumed cause**		**Correction**	**Prevention**	
	Noise		Cycle the power to the NX Unit and see if this clears the error. If the error occurs frequently, check for noise entry paths and implement noise countermea-sures as required.	Implement noise countermea-sures.	
	A/D converter failure		If cycling the power supply to the NX Unit does not clear the error, replace the NX Unit.	None	
Attached information	Attached Information 1: Error Channel 0001 hex: Channel 1 0010 hex: Channel 2 0100 hex: Channel 3 1000 hex: Channel 4 If this error occurs at the same time for more than one channel, the sum of the codes is given. For example, if errors occur at the same time for all channels (1 to 4), then 1111 hex is given.				
Precautions/ Remarks	None				

Event name	Cold Junction Sensor Error		**Event code**	05110000 hex	
Meaning	The temperature cannot be converted because the cold junction sensor is disconnected.				
Source	Depends on where the Support Software is connected and the system configuration.	**Source details**	NX Unit	**Detection timing**	Continuously
Error attributes	**Level**	Minor fault	**Log category**	System	
	Recovery	Reset error in the NX Unit.			
Effects	**User program**	Continues.	**Operation**	Operation before Cause Is Removed: The measured value will be the maximum value in the input indication range. Operation after Cause Is Removed: The process value returns to normal when the connection is restored.	
System-defined variables	**Variable**		**Data type**	**Name**	
	None		---	---	
Cause and correction	**Assumed cause**		**Correction**	**Prevention**	
	There is a faulty connection to the cold junction sensor.		Check the connections to the cold junction sensor on the terminal block and correct any bad connections that are found.	Make sure that the cold junction sensor is corrected correctly on the terminal block.	
	The cold junction sensor failed.		Replace the NX Unit.	None	
Attached information	Attached Information 1: Error Channel 0001 hex: Channel 1 0010 hex: Channel 2 0100 hex: Channel 3 1000 hex: Channel 4 If this error occurs at the same time for more than one channel, the sum of the codes is given. For example, if errors occur at the same time for all channels (1 to 4), then 1111 hex is given.				
Precautions/ Remarks	You can change the event level to the observation level.				

Event name	Control Parameter Error in Master		**Event code**	10410000 hex	
Meaning	An error occurred in the control parameters that are saved in the master.				
Source	Depends on where the Support Software is connected and the system configuration.	**Source details**	NX Unit	**Detection timing**	When power is turned ON to the NX Unit
Error attributes	**Level**	Minor fault	**Log category**	System	
	Recovery	For the NX bus of CPU Units When Fail-soft Operation Is Set to *Stop* Restart the NX Unit and then reset the error in the NX Bus Function Module. When Fail-soft Operation Is Set to *Fail-soft* Restart the NX Unit and then reset the error in the NX Unit. For Communications Coupler Units When Fail-soft Operation Is Set to *Stop* If the errors are detected in the Controller, restart the NX Unit and then reset all of the errors in the Controller. If the errors are not detected in the Controller, restart the NX Unit and then reset the error in the Communications Coupler Unit. When Fail-soft Operation Is Set to *Fail-soft* Restart the NX Unit and then reset the error in the Communications Coupler Unit.				
Effects	**User program**	Continues.	**Operation**	I/O refreshing for the NX Unit stops.	
System-defined variables	**Variable**		**Data type**	**Name**	
	None		---	---	
Cause and correction	**Assumed cause**		**Correction**	**Prevention**	
	For the NX bus of CPU Units				
	The power supply to the CPU Unit was turned OFF while writing the Unit operation settings was in progress. Or there is an error in the area of the non-volatile memory in the CPU Unit in which the Unit operation settings for the relevant NX Unit are saved.		Download the Unit operation settings of the NX Unit again. If the error persists even after you make the above correction, replace the CPU Unit.	Do not turn OFF the power supply to the CPU Unit while transfer of the Unit operation settings for the NX Unit or save of NX Unit parameters by a message is in progress.	
	For Communications Coupler Units				
	The power supply to the Communications Coupler Unit was turned OFF while writing the Unit operation settings was in progress. Or there is an error in the area of the non-volatile memory in the Communications Coupler Unit in which the Unit operation settings for the relevant NX Unit are saved.		Download the Unit operation settings of the NX Unit again. If the error occurs again even after you make the above correction, replace the Communications Coupler Unit.	Do not turn OFF the power supply to the Communications Coupler Unit while transfer of the Unit operation settings for the NX Unit by the Support Software or save of NX Unit parameters by a message is in progress.	
Attached information	None				
Precautions/ Remarks	None				

Event name	Invalid Tuning Parameters Saved in the Unit			**Event code**	14C10000 hex	
Meaning	Failed to write the tuning result to the non-volatile memory, the tuning parameters saved in the Unit became invalid.					
Source	Depends on where the Support Software is connected and the system configuration.		**Source details**	NX Unit	**Detection timing**	When power is turned ON to the NX Unit
Error attributes	**Level**	Minor fault		**Log category**	System	
	Recovery	Reset error in the NX Unit.				
Effects	**User program**	Continues.	**Operation**	For the NX bus of CPU Units Operation is continued with tuning parameters stored in the CPU Unit. For Communications Coupler Units Operation is continued with tuning parameters stored in the Communications Coupler Unit.		
Sys-tem-defined variables	**Variable**		**Data type**		**Name**	
	None		---		---	
Cause and correction	**Assumed cause**		**Correction**		**Prevention**	
	Power was turned OFF during tuning.		Execute tuning again.		Do not turn OFF the power during tuning.	
Attached information	Attached information 1: Error Channel 0001 hex: Channel 1 0010 hex: Channel 2 0100 hex: Channel 3 1000 hex: Channel 4 If this error occurs at the same time for more than one channel, the sum of the codes is given. For example, if errors occur at the same time for all channels (1 to 4), then 1111 hex is given.					
Precautions/ Remarks	None					

Event name	NX Unit Processing Error		**Event code**	40200000 hex	
Meaning	A fatal error occurred in an NX Unit.				
Source	Depends on where the Support Software is connected and the system configuration.	**Source details**	NX Unit	**Detection timing**	Continuously
Error attributes	**Level**	Minor fault	**Log category**	System	
	Recovery	For the NX bus of CPU Units Cycle the power supply to the NX Unit and then reset the error in the NX Bus Function Module. For Communications Coupler Units Cycle the power supply to the NX Unit and then reset the error in the Communications Coupler Unit.			
Effects	**User program**	Continues.	**Operation**	I/O refreshing for the NX Unit stops. Messages cannot be sent to the NX Unit.	
System-defined variables	**Variable**		**Data type**	**Name**	
	None		---	---	
Cause and correction	**Assumed cause**		**Correction**	**Prevention**	
	An error occurred in the software.		For the NX bus of CPU Units Turn ON the Unit power supply again, restart the NX Unit, or restart the NX bus. If this error occurs again even after the above measures are taken, contact your OMRON representative. For Communications Coupler Units Turn ON the Unit power supply again, restart the NX Unit, or restart the slave terminal. If this error occurs again even after the above measures are taken, contact your OMRON representative.	None	
Attached information	Attached information 1: System information Attached information 2: System information Attached information 3: System information Attached information 4: System information				
Precautions/ Remarks	None				

Event name	Sensor Disconnected Error		**Event code**	65100000 hex	
Meaning	A disconnected temperature sensor was detected.				
Source	Depends on where the Support Software is connected and the system configuration.	**Source details**	NX Unit	**Detection timing**	Continuously
Error attributes	**Level**	Minor fault	**Log category**	System	
	Recovery	Reset error in the NX Unit.			
Effects	**User program**	Continues.	**Operation**	Operation before Cause Is Removed: The measured value will be the maximum value in the input indication range. Operation after Cause Is Removed: The process value returns to normal when the connection is restored.	
System-defined variables	**Variable**		**Data type**	**Name**	
	None		---	---	
Cause and correction	**Assumed cause**		**Correction**	**Prevention**	
	The temperature sensor is damaged or the wires are broken.		Check the temperature sensor for damage or broken wires and replace it if it is damaged or there are broken wires.	Make sure that the temperature sensor is not damaged and that no wires are broken before you use it.	
	An unused channel is not disabled.		Set the Channel Enable/Disable Setting parameter to FALSE for the unused channels.	Set the Channel Enable/Disable Setting parameter to FALSE for the unused channels.	
	The wiring of the temperature sensor is incorrect.		Check the connection location with the temperature sensor and the polarity, and perform the wiring correctly if an error is found.	Check the connection location with the temperature sensor and the polarity, and make sure the wiring is performed correctly.	
	The input type is not set correctly.		Check the setting of the input type, and set the appropriate value if an error is found.	Check the setting of the input type, and set an appropriate value.	
	The measured value exceeds the input indication range.		Investigate the cause of the measured value exceeding the input indication range, and take appropriate measures.	Investigate the cause of the measured value exceeding the input indication range, and take appropriate measures.	
	The PV input shift value or PV input slope coefficient has not been set correctly.		Set an appropriate value in the PV input shift or PV input slope coefficient. If correction of temperature input is not performed, set the PV input shift value to “0”, and set the PV input slope coefficient to “1000”.	Set an appropriate value in the PV input shift or PV input slope coefficient. If correction of temperature input is not performed, set the PV input shift value to “0”, and set the PV input slope coefficient to “1000”.	
Attached information	Attached Information 1: Error Channel 0001 hex: Channel 1 0010 hex: Channel 2 0100 hex: Channel 3 1000 hex: Channel 4 If this error occurs at the same time for more than one channel, the sum of the codes is given. For example, if errors occur at the same time for all channels (1 to 4), then 1111 hex is given.				
Precautions/ Remarks	You can change the event level to the observation level.				

Event name	Heater Burnout Detected			**Event code**	652C0000 hex	
Meaning	A heater burnout was detected.					
Source	Depends on where the Support Software is connected and the system configuration.		**Source details**	NX Unit	**Detection timing**	Continuously
Error attributes	**Level**	Minor fault		**Log category**	System	
	Recovery	Reset error in the NX Unit.				
Effects	**User program**	Continues.	**Operation**	Operation will continue.		
System-defined variables	**Variable**		**Data type**		**Name**	
	None		---		---	
Cause and correction	**Assumed cause**		**Correction**		**Prevention**	
	A heater was burned out or damaged.		Check the heater to see if it is burned out or damaged. If the heater is burned out or damaged, replace it.		Find the reasons for the heater burnout or damage and take suitable preventive measures.	
	The setting of the Heater Burnout Detection Current is too high.		Set the Heater Burnout Detection Current to a suitable value.		Set the Heater Burnout Detection Current to a suitable value.	
	A CT input that is not used is allocated to a control output in the CT Allocation setting when this error occurs in the Heater Burnout Detection Unit.		Set the CT Allocation setting for a CT input that is not used to *Do not use*.		Set the CT Allocation setting for a CT input that is not used to *Do not use*.	
	An unused channel is not disabled when this error occurs in the Temperature Control Unit.		Set the Channel Enable/Disable Setting parameter to FALSE for the unused channels.		Set the Channel Enable/Disable Setting parameter to FALSE for the unused channels.	
Attached information	Attached Information 1: Error Channel 0001 hex: Channel 1 0010 hex: Channel 2 0100 hex: Channel 3 1000 hex: Channel 4 If this error occurs at the same time for more than one CT input, the sum of the codes is given. For example, if errors occur at the same time for all of CT1 to CT4, then 1111 hex is given.					
Precautions/ Remarks	You can change the event level to the observation level.					

Event name	SSR Failure Detected			**Event code**	652D0000 hex	
Meaning	An SSR failure was detected.					
Source	Depends on where the Support Software is connected and the system configuration.		**Source details**	NX Unit	**Detection timing**	Continuously
Error attributes	**Level**	Minor fault		**Log category**	System	
	Recovery	Reset error in the NX Unit.				
Effects	**User program**	Continues.	**Operation**	Operation will continue.		
System-defined variables	**Variable**		**Data type**		**Name**	
	None		---		---	
Cause and correction	**Assumed cause**		**Correction**		**Prevention**	
	The SSR was short-circuited or damaged.		Check the SSR to see if it is short-circuited or damaged. If the SSR is short-circuited or damaged, replace it.		Find the reasons for the SSR short circuit or damage and take suitable preventive measures.	
	The setting of the SSR Failure Detection Current is too small.		Set the SSR Failure Detection Current to a suitable value.		Set the SSR Failure Detection Current to a suitable value.	
	A CT input that is not used is allocated to a control output in the CT Allocation setting when this error occurs in the Heater Burnout Detection Unit.		Set the CT Allocation setting for a CT input that is not used to *Do not use*.		Set the CT Allocation setting for a CT input that is not used to *Do not use*.	
	An unused channel is not disabled when this error occurs in the Temperature Control Unit.		Set the Channel Enable/Disable Setting parameter to FALSE for the unused channels.		Set the Channel Enable/Disable Setting parameter to FALSE for the unused channels.	
Attached information	Attached Information 1: Error Channel 0001 hex: Channel 1 0010 hex: Channel 2 0100 hex: Channel 3 1000 hex: Channel 4 If this error occurs at the same time for more than one CT input, the sum of the codes is given. For example, if errors occur at the same time for all of CT1 to CT4, then 1111 hex is given.					
Precautions/ Remarks	You can change the event level to the observation level.					

Event name	Alarm detection		**Event code**	652E0000 hex	
Meaning	The alarm set in the alarm type is detected.				
Source	Depends on where the Support Software is connected and the system configuration.	**Source details**	NX Unit	**Detection timing**	Continuously
Error attributes	**Level**	Minor fault	**Log category**	System	
	Recovery	Reset error in the NX Unit			
Effects	**User program**	Continues.	**Operation**	Operation will continue.	
System-defined variables	**Variable**		**Data type**	**Name**	
	None		---	---	
Cause and correction	**Assumed cause**		**Correction**	**Prevention**	
	An alarm that has occurred as a result of the relationship between the following values set in accordance with the alarm type and the deviation or the measured values is detected. • Alarm Value • Alarm value upper limit and alarm value lower limit		Investigate the cause of detection of an alarm, and take appropriate measures.	Investigate the cause of detection of an alarm, and take appropriate measures.	
	The following values set in accordance with the alarm type do not match the alarm to be detected. • Alarm Value • Alarm value upper limit and alarm value lower limit		Set the following values that have been set in accordance with the alarm type to an appropriate value. • Alarm Value • Alarm value upper limit and alarm value lower limit	Set the following values that have been set in accordance with the alarm type to an appropriate value. • Alarm Value • Alarm value upper limit and alarm value lower limit	
Attached information	Attached information 1: Channel in which alarm 1 error has occurred 0001 hex: Channel 1 0010 hex: Channel 2 0100 hex: Channel 3 1000 hex: Channel 4 Channel in which alarm 2 error has occurred 0002 hex: Channel 1 0020 hex: Channel 2 0200 hex: Channel 3 2000 hex: Channel 4 If this error occurs at the same time for more than one channel input, the sum of the codes is given. For example, the sum will be 3333 hex if alarm 1 and alarm 2 occur simultaneously for all channels from Ch1 to 4.				
Precautions/ Remarks	You can change the event level to the observation level.				

Event name	NX Unit I/O Communications Error		**Event code**	80200000 hex	
Meaning	An I/O communications error occurred in an NX Unit.				
Source	Depends on where the Support Software is connected and the system configuration.	**Source details**	NX Unit	**Detection timing**	Continuously
Error attributes	**Level**	Minor fault	**Log category**	System	
	Recovery	For the NX bus of CPU Units When Fail-soft Operation Is Set to *Stop* Reset the error in the NX Bus Function Module. When Fail-soft Operation Is Set to *Fail-soft* Reset the error in the NX Unit. For Communications Coupler Units When Fail-soft Operation Is Set to *Stop* If the errors are detected in the Controller, reset all of the errors in the Controller. If the errors are not detected in the Controller, reset errors in the Communications Coupler Unit and NX Unit. When Fail-soft Operation Is Set to *Fail-soft* Reset errors in the Communications Coupler Unit and NX Unit.			
Effects	**User program**	Continues.	**Operation**	The NX Unit will continue to operate. Input data: Updating input values stops. Output data: The output values depend on the Load Rejection Output Setting.	
System-defined variables	**Variable**		**Data type**	**Name**	
	None		---	---	

Cause and correction	**Assumed cause**	**Correction**	**Prevention**
	For the NX bus of CPU Units		
	An error that prevents normal NX bus communications occurred in a CPU Unit.	Check the error that occurred in the CPU Unit and perform the required corrections.	Take preventive measures against the error that occurred in the CPU Unit.
	An NX Unit is not mounted properly.	Mount the NX Units and End Cover securely and secure them with End Plates.	Mount the NX Units and End Cover securely and secure them with End Plates.
	The power cable for the Unit power supply is disconnected, or the wiring from the Unit power supply to the NX Units is incorrect.	Wire the Unit power supply to the NX Units securely.	Wire the Unit power supply to the NX Units securely.
	The power cable for the Unit power supply is broken.	If the power cable between the Unit power supply and the NX Units is broken, replace it.	None
	The voltage of the Unit power supply is outside the specified range, or the capacity of the Unit power supply is insufficient.	Configure the power supply system configuration correctly according to the power supply design method.	Configure the power supply system configuration correctly according to the power supply design method.
	There is a hardware error in an NX Unit.	If the error persists even after you make the above correction, replace the NX Unit.	None
	For Communications Coupler Units		
	An error that prevents normal NX bus communications occurred in a Communications Coupler Unit.	Check the error that occurred in the Communications Coupler Unit and perform the required corrections.	Take preventive measures against the error that occurred in the Communications Coupler Unit.
	The NX Unit is not mounted properly.	Mount the NX Units and End Cover securely and secure them with End Plates.	Mount the NX Units and End Cover securely and secure them with End Plates.
	The power cable for the Unit power supply is disconnected. Or, the wiring from the Unit power supply to the NX Units is incorrect.	Correctly wire the Unit power supply to the NX Units.	Correctly wire the Unit power supply to the NX Units.
	The power cable for the Unit power supply is broken.	If the power cable between the Unit power supply and the NX Units is broken, replace it.	None
	The voltage of the Unit power supply is outside the specified range. Or, the capacity of the Unit power supply is insufficient.	Correctly configure the power supply system according to the power supply design methods.	Correctly configure the power supply system according to the power supply design methods.
	There is a hardware error in the NX Unit.	If the error occurs again even after you make the above correction, replace the NX Unit.	None
Attached information	None		
Precautions/ Remarks	None		

Event name	NX Unit Clock Not Synchronized Error		**Event code**	80240000 hex	
Meaning	A time information error occurred in an NX Unit.				
Source	Depends on where the Support Software is connected and the system configuration.	**Source details**	NX Unit	**Detection timing**	Continuously
Error attributes	**Level**	Minor fault	**Log category**	System	
	Recovery	For the NX bus of CPU Units Cycle the power supply to the Unit. For Communications Coupler Units Cycle the power supply to the Unit and then reset all of the errors in the Controller.			
Effects	**User program**	Continues.	**Operation**	The NX Unit will continue to operate. Input data: Updating input values stops. Output data: The output values depend on the Load Rejection Output Setting.	
System-defined variables	**Variable**		**Data type**	**Name**	
	None		---	---	
Cause and correction	**Assumed cause**		**Correction**	**Prevention**	
	For the NX bus of CPU Units				
	There is a hardware error in an NX Unit.		If the error occurs only in a specific NX Unit, replace the relevant NX Unit.	None	
	There is a hardware error in a CPU Unit.		If the error occurs in all of the NX Units mounted on a CPU Unit, replace the CPU Unit.	None	
	For Communications Coupler Units				
	There is a hardware error in an NX Unit.		If the error occurs only in a specific NX Unit, replace the relevant NX Unit.	None	
	There is a hardware error in an EtherCAT Coupler Unit.		If the error occurs in all of the NX Units mounted on a Communications Coupler Unit, replace the Communications Coupler Unit.	None	
Attached information	None				
Precautions/ Remarks	None				

Event name	NX Message Communications Error			**Event code**	80220000 hex	
Meaning	An error was detected in message communications and the message frame was discarded.					
Source	Depends on where the Support Software is connected and the system configuration.		**Source details**	NX Unit	**Detection timing**	During NX message communications
Error attributes	**Level**	Observation		**Log category**	System	
	Recovery	---				
Effects	**User program**	Continues.	**Operation**	Not affected.		
System-defined variables	**Variable**		**Data type**		**Name**	
	None		---		---	
Cause and correction	**Assumed cause**		**Correction**		**Prevention**	
	For the NX bus of CPU Units					
	The message communications load is high.		Reduce the number of times that instructions are used to send NX messages.		Reduce the number of times that instructions are used to send NX messages.	
	For Communications Coupler Units					
	The message communications load is high.		Reduce the number of times that instructions are used to send NX messages.		Reduce the number of times that instructions are used to send NX messages.	
	The communications cable is disconnected or broken. This cause does not apply if attached information 2 is 0 (NX bus).		Connect the communications cable securely.		Connect the communications cable securely.	
	Message communications were cutoff by executing the followings in message communications. • Transfer of parameters by the Support Software • Restoration of the backup data (if this error occurred in the EtherCAT Slave Terminal) • Disconnection of an EtherCAT slave (if this error occurred in the EtherCAT Slave Terminal)		---		---	
Attached information	Attached information 1: System information Attached information 2: Type of communications where error occurred 0: NX bus 1: EtherCAT 2: Serial communications (USB) 3: EtherNet/IP 65535: Internal Unit communications (routing)					
Precautions/ Remarks	None					

Event name	Event Log Cleared		**Event code**	90400000 hex	
Meaning	The event log was cleared.				
Source	Depends on where the Support Software is connected and the system configuration.	**Source details**	NX Unit	**Detection timing**	When commanded from user
Error attributes	**Level**	Information	**Log category**	Access	
	Recovery	---			
Effects	**User program**	Continues.	**Operation**	Not affected.	
System-defined variables	**Variable**		**Data type**	**Name**	
	None		---	---	
Cause and correction	**Assumed cause**		**Correction**	**Prevention**	
	The event log was cleared by the user.		---	---	
Attached information	Attached information 1: Events that were cleared 1: The system event log was cleared. 2: The access event log was cleared.				
Precautions/ Remarks	None				

Event name	Tuning Parameter Updated		**Event code**	94D00000 hex	
Meaning	The parameters were updated by tuning.				
Source	Depends on where the Support Software is connected and the system configuration.	**Source details**	NX Unit	**Detection timing**	When tuning by user operation is completed normally
Error attributes	**Level**	Information	**Log category**	Access	
	Recovery	---			
Effects	**User program**	Continues.	**Operation**	Operation is continued with the updated tuning parameters.	
System-defined variables	**Variable**		**Data type**	**Name**	
	None		---	---	
Cause and correction	**Assumed cause**		**Correction**	**Prevention**	
	Tuning of one of the following functions by the user operation was completed normally and the tuning parameters were updated. • AT • Automatic filter adjustment • PID update by Adaptive control with the Notification		---	---	
Attached information	Attached information 1: Channel Updated 0001 hex: Channel 1 0010 hex: Channel 2 0100 hex: Channel 3 1000 hex: Channel 4 If this error occurs at the same time for more than one channel, the sum of the codes is given. For example, if errors occur at the same time for all channels (1 to 4), then 1111 hex is given.				
Precautions/ Remarks	If necessary, save the tuning parameters by performing the backup operation, saving parameters with the special instruction or the message communications, or uploading the settings.				

Event name	Related Parameters Initialized			**Event code**	94D10000 hex	
Meaning	Related parameters were initialized by parameter changes.					
Source	Depends on where the Support Software is connected and the system configuration.		**Source details**	NX Unit	**Detection timing**	When parameters are changed by user operation
Error attributes	**Level**	Information		**Log category**	Access	
	Recovery	---				
Effects	**User program**	Continues.	**Operation**	The operation is continued with the initialized parameters.		
System-defined variables	**Variable**		**Data type**		**Name**	
	None		---		---	
Cause and correction	**Assumed cause**		**Correction**		**Prevention**	
	The model parameters of adaptive control were initialized because either the input type parameter or the temperature unit parameter had been changed.		---		---	
Attached information	Attached information 1: Channel Updated 0001 hex: Channel 1 0010 hex: Channel 2 0100 hex: Channel 3 1000 hex: Channel 4 If this error occurs at the same time for more than one channel, the sum of the codes is given. For example, if errors occur at the same time for all channels (1 to 4), then 1111 hex is given.					
Precautions/ Remarks	If you use the adaptive control, execute AT again.					

Event name	Tuning Parameter Automatically Updated		**Event code**	94F00000 hex	
Meaning	The parameters were automatically updated by tuning.				
Source	Depends on where the Support Software is connected and the system configuration.	**Source details**	NX Unit	**Detection timing**	At the time of successful completion of tuning by automatic execution
Error attributes	**Level**	Information	**Log category**	System	
	Recovery	---			
Effects	**User program**	Continues.	**Operation**	Operation continues with the updated tuning parameters	
System-defined variables	**Variable**		**Data type**	**Name**	
	None		---	---	
Cause and correction	**Assumed cause**		**Correction**	**Prevention**	
	Tuning by automatic execution of the following functions was completed normally, and the tuning parameters were updated. • Water-cooling output adjustment • Adaptive control with the Automatic update		---	---	
Attached information	Attached information 1: Channel Automatically Updated 0001 hex: Channel 1 0010 hex: Channel 2 0100 hex: Channel 3 1000 hex: Channel 4 If this error occurs at the same time for more than one channel, the sum of the codes is given. For example, if errors occur at the same time for all channels (1 to 4), then 1111 hex is given.				
Precautions/ Remarks	If necessary, save the tuning parameters by performing the backup operation, saving parameters with the special instruction or the message communications, or uploading the settings.				

8-4 Resetting Errors

Refer to the user's manual for the connected CPU Unit or Communications Coupler Unit for details on how to reset errors.

8-5 Unit-specific Troubleshooting

The following table shows the errors inherent to the Temperature Control Unit, their assumed causes, and corrections.

Error	Assumed cause	Correction
The following occur the first time power is connected: • Temperature error is large. • Sensor disconnected error	Input type mismatch.	Check the sensor type and reset the input type correctly.
	Temperature sensor is not installed properly.	Check the temperature sensor installation location and polarity and install correctly.
The following occur during operation: • Temperature error is large. • Sensor disconnected error	Temperature sensor has burnt out or short-circuited.	Check whether the temperature sensor has burnt out or short-circuited.
	Temperature sensor lead wires and power lines are in the same conduit, causing noise from the power lines (generally, measured values will be unstable).	Wire the lead wires and power lines in separate conduits, or wire them using a more direct path.
	Connection between the Temperature Control Unit and thermocouple is using copper wires.	Connect the thermocouple's lead wires directly, or connect compensating conductors that are suitable for the thermocouple.
	Installation location of temperature sensor is unsuitable.	Make sure that the location that is being measured with the temperature sensor is suitable.
	PV Input shift is not set correctly (default: 0.0°C)	Set a suitable PV Input Shift. If PV Input Shift is not required, set the input shift value to 0.0.
	Temperature Unit was changed after the PV Input Shift value was set.	Implement one of the following measures. • After loading PV Input Shift value, perform the unit conversion calculation and make the setting again. • Perform temperature input calibration again and set PV Input Shift value.
Overshooting, Undershooting, Hunting	Unsuitable PID constant	Set appropriate PID constants using either of the following methods. • Execute AT (autotuning). • Set PID constants individually using manual settings.
	SSR operation failure	Use breeder resistance if the problem is due to leakage current. Also, consider the error was detected by the SSR failure detection.
	The power supply to the load (e.g., heater) was turned ON or OFF during tuning.	During tuning, ensure that the power for the load (e.g., heater) is ON. Otherwise, the correct tuning result cannot be calculated and optimal control will not be possible.
Temperature is not rising	Specified operation is unsuitable for required control (default: Reverse operation).	Select either direct or reverse operation depending on the required control. Reverse operation is used for heating operations.
	Heater is burnt out or deteriorated.	Check whether heater burnout or deterioration have occurred. Also, consider the error was detected by the heater burnout detection.

Error	Assumed cause	Correction
Temperature is not rising	Insufficient heater capacity.	Check whether the heater's heating capacity is sufficient.
	Cooling system in operation.	Check whether a cooling system is operating.
	Peripheral devices have heat prevention device operating.	Set the heating prevention temperature setting to a value higher than the set temperature of the Temperature Control Unit.
No output. (Output indicator is not lit)	A stop command was given. (When the power is cycled or the Unit is restarted: Run)	Use the Run or Stop bit of the I/O data Ch□ Operation Command to instruct Run.
	Settings do not match the target control operation. (default: Reverse operation)	Set direct operation or reverse operation according to the target control. For heating operation, set Reverse operation.
	For ON/OFF operation, a large value for the hysteresis is set. (default: 1.0°C)	Set an appropriate value for the hysteresis.
No output. (Output indicator is lit or flashing)	I/O power is not supplied.	Check that the I/O power is supplied.
	The I/O power supply is outside the ratings.	Set the I/O power supply voltage so that it is within the rated voltage range.
	Incorrect wiring to the connected external device.	Check the wiring with the connected external device.
	The wiring to the connected external device is disconnected.	Check the wiring with the connected external device.
	The connected external device is faulty.	Replace the connected external device.
	Load short-circuit protection activated.	Eliminate the cause of the short-circuit.
Temperature Control Unit does operate.	A stop command was given. (When the power is cycled or the Unit is restarted: Run)	Use the Run or Stop bit of the I/O data Ch□ Operation Command to instruct Run.
	Set Ch□ Enable/Disable to Disable.	Set Ch□ Enable/Disable to Enable.
The cold junction sensor error occurs when the cold junction compensation is disabled.	The cold junction sensor is disconnected.	Connect the cold junction sensor.
No heater burnout detected.	The manipulated variable is not output.	The Unit detects a heater burnout when the control output is ON. Turn control output ON or make the setting to allow it to turn ON/OFF.
	The value of the Heater Burnout Detection Current is too small.	Set the Heater Burnout Detection Current to a suitable value.
Heater current or leakage current does not change.	The manipulated variable is not output. Or, the manipulated variable is output continuously.	The Unit updates the heater current when the control output is ON, and the leakage current when the control output is OFF. Set the Unit so that the control output turns ON and OFF.
Temperature control cannot be stopped.	Load rejection occurred.	Check if a Controller error, communications coupler Unit error, or NX bus error occurred. In addition, to specify the Temperature Control Unit output operation when load rejection occurs, consider the use of the manipulated variable at load rejection. Refer to *7-4-9 Load Rejection MV* on page 7-46 for details on the manipulated variable at load rejection.
AT does not work.	A stop command was given. (When the power is cycled or the Unit is restarted: Run)	Use the Run or Stop bit of the I/O data Ch□ Operation Command to instruct Run.

Error	Assumed cause	Correction
Setting data cannot be changed.	AT and Automatic Filter Adjustment are being executed.	Change the setting data after confirming that the "100 Percent AT", "40 Percent AT", and "Automatic Filter Adjustment Status" bits of "Ch Operating Status" of the I/O data are all OFF.
A mismatch is notified when Compare with Backup File is executed.	The tuning parameters are updated depending on whether tuning is performed by a user operation, or by the automatic execution of the Temperature Control Unit.	Perform backup with the backup function. For details, refer to *2-3-3 Backing up the Tuning Parameters* on page 2-7.

8-6 Troubleshooting Flowchart

Refer to the user's manual for the connected CPU Unit or Communications Coupler Unit for details on the standard troubleshooting process when an error occurs.

9

Inspection and Maintenance

This section describes how to clean, inspect, and maintain the Temperature Control Units.

9-1 Cleaning and Inspection 9-2

9-1-1 Cleaning 9-2

9-1-2 Periodic Inspection 9-2

9-2 Maintenance Procedures 9-4

9-2-1 Storing Tuning Parameters 9-4

9-2-2 Unit Replacement Procedure 9-4

9-1 Cleaning and Inspection

This section describes daily device maintenance such as cleaning and inspection.

Make sure to perform daily or periodic inspections in order to maintain the Temperature Control Unit functions in the best operating condition.

9-1-1 Cleaning

Perform the following cleaning procedures periodically to ensure the Temperature Control Units are maintained in the best operating condition.

- Wipe the equipment over with a soft, dry cloth when performing daily cleaning.
- If dirt remains even after wiping with a soft, dry cloth, wipe with a cloth that has been wet with a sufficiently diluted detergent (2%) and wrung dry.
- Units will become stained if items such as rubber, vinyl products, or adhesive tape are left on the NX Unit for a long period. Remove such items during regular cleaning.

Precautions for Correct Use

- Never use benzene, thinners, other volatile solvents, or chemical cloths.
- Do not touch the NX bus connectors.

9-1-2 Periodic Inspection

NX Units do not have parts with a specific life. However, its elements can deteriorate under improper environmental conditions. Periodic inspections are thus required to ensure that the required conditions are being maintained.

Inspection is recommended at least once every six months to a year, but more frequent inspections may be necessary depending on the severe environments.

Take immediate steps to correct the situation if any of the conditions in the following table are not met.

Periodic Inspection Items

No.	Inspection item	Inspection details	Criteria	Correction
1	External power supply	Is the power supply voltage measured at the terminal block within standards?	Within the power supply voltage range	Use a voltage tester to check the power supply at the terminals. Take necessary steps to bring the power supply within the power supply voltage range.
2	I/O power supply	Is the power supply voltage measured at the I/O terminal block within standards?	Voltages must be within I/O specifications of each NX Unit.	Use a voltage tester to check the power voltage at the terminals. Take necessary steps to bring the I/O power supply within NX Unit standards.
3	Ambient environment	Is the ambient operating temperature within standards?	0 to 55°C	Use a thermometer to check the temperature and ensure that the ambient operating temperature remains within the allowed range of 0 to 55°C.
		Is the ambient operating humidity within standards?	Relative humidity must be 10% to 95% with no condensation.	Use a hygrometer to check the humidity and ensure that the ambient operating humidity remains between 10% and 95%. Make sure that condensation does not occur due to rapid changes in temperature.
		Is it subject to direct sunlight?	Not in direct sunlight	Protect the Controller if necessary.
		Is there an accumulation of dirt, dust, salt, metal powder, etc.?	No accumulation	Clean and protect the Controller if necessary.
		Is there water, oil, or chemical sprays hitting the Controller?	No spray	Clean and protect the Controller if necessary.
		Are there corrosive or flammable gases in the area of the Controller?	No spray	Check by smell or use a sensor.
		Is the Unit subject to shock or vibration?	Vibration resistance and shock resistance must be within specifications.	Install cushioning or other vibration and shock absorbing equipment if necessary.
		Are there noise sources near the Controller?	No significant noise sources	Either separate the Controller and noise source, or protect the Controller.
4	Installation and wiring	Are the DIN track mounting hooks for each NX Unit securely locked?	No looseness	Securely lock the DIN track mounting hooks.
		Are the cable connectors fully inserted and locked?	No looseness	Correct any improperly installed connectors.
		Are there any loose screws on the End Plates (PFP-M)?	No looseness	Tighten loose screws with a Phillips-head screwdriver.
		Are the NX Units connected to each other along the hookup guides and until they touch the DIN track?	You must connect and fix the NX Units to the DIN track.	Connect the NX Units to each other along the hookup guides and until they touch the DIN track.
		Are there any damaged external wiring cables?	No visible damage	Check visually and replace cables if necessary.

Tools Required for Inspections

Required Tools

- Phillips screwdriver
- Flat-blade screwdriver
- Voltage tester or digital voltmeter
- Industrial alcohol and pure cotton cloth

Tools Required Occasionally

- Oscilloscope
- Thermometer and hygrometer

9-2 Maintenance Procedures

9-2-1 Storing Tuning Parameters

If a failure occurs in the Temperature Control Unit, the tuning parameters stored by the tuning function in the Temperature Control Unit are lost. Save the tuning parameters periodically as required so that they can be restored.

Refer to *Method to Restore Tuning Parameters* on page 7-86 for details on how to recover the tuning parameters.

9-2-2 Unit Replacement Procedure

When replacing the Temperature Control Unit, follow the procedure in the user's manual for the connected CPU Unit or Communications Coupler Unit.

If the adaptive control function is set to Notify, the following parameters cannot be restored even if the tuning parameters are stored.

- Ch□ System Fluctuation Reference Proportional Band
- Ch□ System Fluctuation Average Deviation

After replacing the Unit, evaluate the system performance three times. For details on evaluating the system performance when the adaptive control is set to notify, refer to *Notification Operation and Evaluation Criteria* on page 7-75.

A

Appendices

The appendices provide datasheets, dimensions, and other information for Temperature Control Units.

A-1 Datasheet A-3

A-1-1 Model List A-3

A-1-2 Detailed Specifications A-4

A-1-3 Table of Reference Accuracies and Temperature Coefficients A-31

A-1-4 Specifications of Cold Junction Compensation Error for Thermocouple Inputs A-33

A-2 Dimensions A-35

A-2-1 Screwless Clamping Terminal Block Type A-35

A-3 List of NX Objects A-37

A-3-1 Format of Object Descriptions A-37

A-3-2 Unit Information Objects A-38

A-3-3 Objects That Accept I/O Allocations A-39

A-3-4 Other Objects A-69

A-4 CT (Current Transformer) A-86

A-4-1 Connectable CTs A-86

A-4-2 CT Installation Locations A-89

A-4-3 Calculation Methods for Heater Burnout Detection Currents and SSR Failure Detection Currents A-89

A-5 Sample programming A-92

A-5-1 Items Common to Each Sample Program A-93

A-5-2 Standby Sequence Alarm A-97

A-5-3 Tuning Parameter Backup Part 1 . . . . . A-101

A-5-4 Tuning Parameter Backup Part 2 . . . . . A-104

A-5-5 Inheriting the MV when Switching to Manual Mode A-107

A-5-6 I/O Data Tuning Parameter Update A-111

A-5-7 When the Temperature Control Unit is Connected to a CPU Unit A-117

A-6 Version Information with CPU Units A-122

A-6-1 Relationship between Unit Versions of Units A-122

A-6-2 Functions That Were Added or Changed for Each Unit Version A-124

A-7 Version Information with Communications Coupler Units A-125
A-7-1 Connection to an EtherCAT Coupler Unit A-125
A-7-2 Connection to an EtherNet/IP Coupler Unit A-127
A-8 Displaying the Edit Unit Operation Settings Tab Page A-129
A-8-1 Connection to the CPU Unit A-129
A-8-2 Connection to the Slave Terminal A-130
A-9 Edit Unit Operation Settings Tab Page A-132
A-10 Temperature Sensor for Packing Machines A-134
A-10-1 Model Number Legend A-134
A-10-2 Dimensions A-135
A-10-3 Mounting Brackets A-135

A-1 Datasheet

The specifications of the Temperature Control Unit are described below.

A-1-1 Model List

Temperature Control Unit (screwless clamping terminal block, 12 mm width)

Model	Number of Channels	Input types	Output		Number of CT input points per channel	Control type	I/O Refreshing Methods	Reference
			Output type	Number of output points per channel				
NX-TC2405	2 channels	Universal input	Voltage output (for driving SSR)	1 point per channel (2 points per Unit)	1 point per channel (2 points per Unit)	Standard control	Free-Run refreshing	P. A-7
NX-TC2406					None.			P. A-10
NX-TC2407			Voltage output (for driving SSR)	2 points per channel (4 points per Unit)	None.	Heating/cooling control		P. A-13
NX-TC2408			Linear current output	1 point per channel (2 points per Unit)	None.	Standard control		P. A-16

Temperature Control Unit (screwless clamping terminal block, 24 mm width)

Model	Number of Channels	Input types	Output		Number of CT input points per channel	Control type	I/O Refreshing Methods	Reference
			Output type	Number of output points per channel				
NX-TC3405	4 channels	Universal input	Voltage output (for driving SSR)	1 point per channel (4 points per Unit)	1 point per channel (4 points per Unit)	Standard control	Free-Run refreshing	P. A-19
NX-TC3406					None.			P. A-22
NX-TC3407			Voltage output (for driving SSR)	2 point per channel (8 points per Unit)	None.	Heating/cooling control		P. A-25
NX-TC3408			Linear current output	1 point per channel (4 points per Unit)	None.	Standard control		P. A-28

A-1-2 Detailed Specifications

Description of data sheet items

The meanings of the items on the datasheet of the Temperature Control Unit are explained in the table below.

Item		Description
Unit name		The name of the Unit.
Model		The number of the Unit.
Number of Channels		Number of control loops of the Unit.
Control type		Control type of the Unit.
Points per channel		The number of temperature inputs, CT inputs, and control outputs for each channel of the Unit. Values in parentheses indicate the number of points per Unit.
External connection terminal		The type of terminal block or connector that is used to wire the Unit. For a screwless clamping terminal block, also indicates the number of terminals.
I/O refreshing method		The I/O refreshing method of the Unit. Only Free-Run refreshing is supported.
Indicators		The type and layout of the indicators on the Unit.
Sensor input section	**Temperature sensors**	A temperature sensor that can be connected to the Unit.
	Input conversion range	The conversion range of temperature data for the full scale of the Unit. Temperature data input outside this range is fixed to the upper limit of the input indication range.
	Absolute maximum rating	The maximum value of a input signal from the thermocouple sensor to the Unit. If a signal exceeding this range is input, the Unit may be damaged.
	Input impedance	The input impedance of the thermocouple input to the Unit.
	Resolution	The resolution of the measured values for the Unit. Defined in °C.
	Reference accuracy	The reference conversion accuracy of temperature inputs of the Unit. Defined at an ambient temperature of 25°C.
	Temperature coefficient	The conversion coefficient of temperature inputs of the Unit.
	Cold junction compensation error	The cold junction compensation error of the Unit.
	Input disconnection detection current	The current with which the Unit detects disconnection at thermocouple inputs.
	Input detection current	The current value to detect temperature inputs with this Unit using a platinum resistance thermometer.
	Effect of conductor resistance	The effect of conductor resistance of the Unit.
	Warm-up period	The warm-up period of the Unit. If the Unit is warmed up, the temperature inside the Unit is stable. Thus, the measurement value is stable. If the Unit is not warmed up, the temperature data error becomes larger.
	Conversion time	The time required to convert temperature input signals of the Unit to temperature data.

Item		Description
CT input section	CT current input range	The input range of the CT input signals in the Unit.
	Input resistance	The internal resistance of the Unit, viewed from the CT input terminal of the Unit.
	Connectable CTs	The CT models that can be connected to the Unit.
	Maximum heater current	The maximum current value that can flow through the primary heater power line of the CT that is connected to the Unit.
	Resolution	The resolution of the CT current converted value in the Unit.
	Overall accuracy (25°C)	The CT current input conversion accuracy of the Unit. Defined at 25°C.
	Influence of temperature (0 to 55°C)	The accuracy of the CT current inputs that are influenced by changes in the ambient temperature of the Unit. It is defined as the deviation from the overall accuracy.
	Conversion time	The time required to convert CT input signals to heater current converted values in the Unit.
Control output section	Control output type and points per channel	Type of control output of this Unit and the number of points per channel. There are two types of control output: voltage output (for driving SSR) and linear current output.
	Internal I/O common	The polarity that the Unit uses to connect to output devices.
	Control Period	The period when the ON/OFF time ratio is changed for time-proportional operation of voltage outputs (for driving SSR) in the Unit.
	manipulated variable	The range of the value of a manipulated variable that you can input to the Unit.
	Resolution	The resolution of converted values of the Unit.
	Rated Voltage	The rated voltage for control output.
	Operating Load Voltage Range	The load voltage range of the control outputs on the Unit.
	Maximum load current	The maximum load current for voltage output (for driving SSR) of the Unit. Defines the specification of each voltage output (for driving SSR) point and for each Unit.
	Maximum Inrush Current	The maximum allowable inrush current of the voltage output (for driving SSR) of the Unit. The inrush current of the connected external load must be lower than this value.
	Allowable load resistance	The allowable load resistance of the linear current output of this Unit.
	Leakage current	The leakage current when the voltage output (for driving SSR) of the Unit is OFF.
	Residual voltage	The residual voltage when the voltage output (for driving SSR) of the Unit is ON.
	Load Short-circuit Protection	Whether the load short-circuit protection function is installed in this Unit.
	Output range	The output range of the linear current output of the Unit.
	Overall accuracy (25°C)	The overall accuracy of the linear current output of the Unit.
	Influence of temperature (0 to 55°C)	The accuracy of the linear current outputs that are influenced by changes in the ambient temperature of the Unit. It is defined as the deviation from the overall accuracy.
Dimensions		The dimensions of the Unit. The dimensions are given in the form W × H × D. The dimensions are given in millimeters.
Isolation method		The isolation method between the following circuits in the Unit: • Between input circuit and internal circuit • Between output circuit and internal circuit • Between input circuits • Between output circuits
Insulation resistance		The insulation resistance between the insulated circuits in the Unit.
Dielectric strength		The dielectric strength between the insulated circuits in the Unit.
I/O power supply method		The method for supplying I/O power to the Unit. The supply method is determined for each Unit. The power is supplied from the NX bus or the external source.
Current capacity of I/O power supply terminals		The current capacity of the I/O power supply terminals (IOV and IOG) on the Unit. When I/O power is supplied to external devices connected to this Unit, do not supply a voltage that exceeds this value.

Item	Description
NX Unit power consumption	The NX Unit power consumption of this Unit. Shows the power consumption when the NX Unit is connected to a CPU Unit and when connected to a Communications Coupler Unit.
Current consumption from I/O power supply	The current consumption of the Unit from the I/O power supply. The current consumption of any connected external devices is excluded.
Weight	The weight of the Unit.
Circuit layout	The circuit layout of the temperature input, CT input and control output circuits of the Unit.
Installation orientation and restrictions	The installation orientation of the CPU Unit and the Slave Terminal, including this Unit. Any restrictions to specifications that result from the installation orientation are also given.
Terminal connection diagram	The connection diagram between the Unit and external devices. Shows any I/O Power Supply Connection Units or Shield Connection Units that are required to connect a connected external device.

Temperature Control Units (Screwless Clamping Terminal Block, 12 mm Width)

Unit name		Temperature Control Unit (2-channel type)	**Model**		NX-TC2405
Number of Channels		2 channels	**Control type**		Standard control
Points per channel		• Temperature input: 1 point per channel (2 points per Unit) • CT input: 1 point per channel (2 points per Unit) • Control input: 1 point per channel (2 points per Unit)	**External connection terminal**		Screwless Clamping Terminal Block (16 terminals)
I/O refreshing method		Free-Run Refreshing			
Indicators		TS indicator and output indicators 	**CT Input section**	**CT current input range**	0 to 0.125 A
				Input resistance	Approx. 2.7 Ω
				Connectable CTs	E54-CT1, E54-CT3, E54-CT1L, E54-CT3L
				Maximum heater current	50 A AC
				Resolution	0.1 A
				Overall accuracy (25°C)	± 5% (full-scale) ± 1 digit
				Influence of temperature (0 to 55°C)	± 2% (full-scale) ± 1 digit
				Conversion time	50 ms per Unit
			Control Output section	**Control output type and points per channel**	Voltage output (for driving SSR), 1 point per channel
				Internal I/O common	PNP
				Control Period	0.1, 0.2, 0.5, 1 to 99 s
				Manipulated variable	-5% to +105%
Sensor Input section	**Temperature sensors**[*1]	• Thermocouple input: K, J, T, E, L, U, N, R, S, B, C/W, PL II • Platinum resistance thermometer input: Pt100 (3-wire type), JPt100 (3-wire type)		**Resolution**	---
	Input conversion range	±20°C of the input range[*2]		**Rated Voltage**	24 VDC
	Absolute maximum rating	± 130 mV		**Operating Load Voltage Range**	15 to 28.8 VDC
	Input impedance	20 kΩ min.		**Maximum load current**	21 mA per point, 42 mA per Unit
	Resolution	0.1°C max.		**Maximum Inrush Current**	0.3 A per point max., 10 ms max.
	Reference accuracy	*3		**Allowable load resistance**	---
	Temperature coefficient	*3		**Leakage current**	0.1 mA max.
	Cold junction compensation error	± 1.2°C[*3 *4]		**Residual voltage**	1.5 V max.
	Input disconnection detection current	Approx. 0.1 uA		**Load Short-circuit Protection**	Provided
	Input detection current	0.25 mA		**Output range**	---

Sensor Input section	**Effect of conductor resistance**	• Thermocouple input: 0.1°C per Ω (100 Ω max. per line) • Platinum resistance thermometer input: 0.06°C per Ω (20 Ω max. per line)	**Control Output section**	**Overall accuracy (25°C)**	---
	Warm-up period	30 minutes		**Influence of temperature (0 to 55°C)**	---
	Conversion time	50 ms per Unit			
Dimensions		12 mm (W) x 100 mm (H) x 71 mm (D)	**Isolation method**		• Between sensor input and internal circuit: Power = transformer, Signal = digital isolator • Between sensor inputs: Power = transformer, Signal = digital isolator • No isolation between internal circuits and CT inputs • Between control output and internal circuit: Photocoupler isolation • No isolation between control outputs
Insulation resistance		20 MΩ min. between isolated circuits (at 100 VDC)	**Dielectric strength**		510 VAC between isolated circuits for 1 minute with a leakage current of 5 mA max.
I/O power supply method		Supplied from the NX bus.	**Current capacity of I/O power supply terminals**		IOG: 0.1 A per terminal max.
NX Unit power consumption		• Connected to a CPU Unit 1.45 W max. • Connected to Communications Coupler Unit 1.10 W max.	**Current consumption from I/O power supply**		20 mA max.
Weight		75 g max.			
Circuit configuration		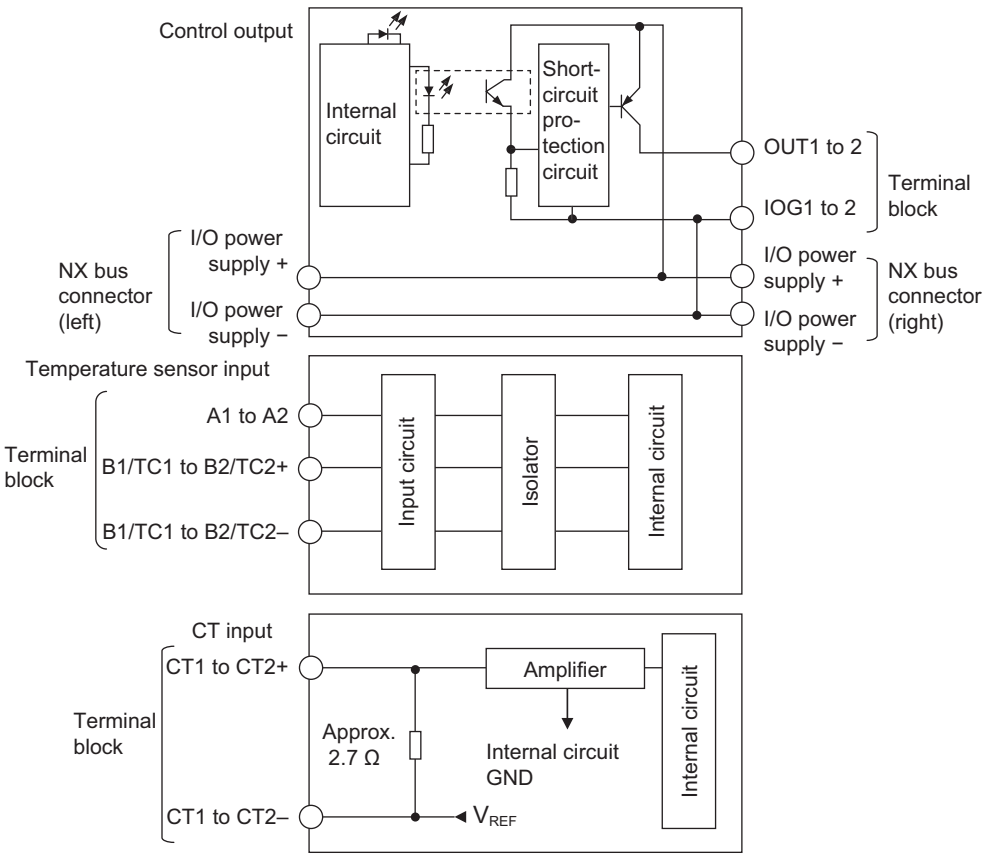			

Installation orientation and restrictions	Installation orientation: • Connected to a CPU Unit Possible in upright installation. • Connected to a Communications Coupler Unit Possible in 6 orientations. Restrictions: The cold junction compensation error is restricted according to the installation orientation of this Unit as well as the types and power consumption of adjacent Units. Refer to *A-1-4 Specifications of Cold Junction Compensation Error for Thermocouple Inputs* on page A-33 for details.
Terminal connection diagram	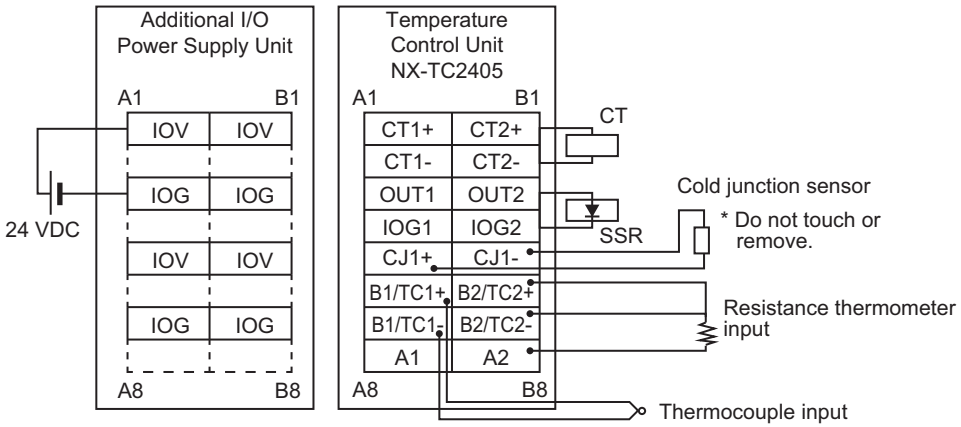

*1. Refer to *7-3-1 Input Type Settings* on page 7-11 for the setting range and indication range of each sensor.

*2. + 20°C only for the following input type settings:
1: JPt 100
3: JPt 100
10: T
14: U

*3. Refer to *A-1-3 Table of Reference Accuracies and Temperature Coefficients* on page A-31.
For thermocouple inputs, reference accuracy and cold junction compensation error are guaranteed for a set of a Temperature Control Unit and a terminal block on which a cold junction sensor is mounted. Be sure to use the terminal block and the Temperature Control Unit with the same calibration control number together. A calibration control number is displayed both on the terminal block and the Unit. Make sure to return the terminal block to which a cold junction sensor is mounted and the Unit together.

*4. Refer to *A-1-4 Specifications of Cold Junction Compensation Error for Thermocouple Inputs* on page A-33.

Unit name		Temperature Control Unit (2-channel type)	**Model**		NX-TC2406
Number of Channels		2 channels	**Control type**		Standard control
Points per channel		• Temperature input: 1 point per channel (2 points per Unit) • CT input: none • Control input: 1 point per channel (2 points per Unit)	**External connection terminal**		Screwless Clamping Terminal Block (16 terminals)
I/O refreshing method		Free-Run Refreshing			
Indicators		TS indicator and output indicators 	**CT Input section**	**CT current input range**	---
				Input resistance	---
				Connectable CTs	---
				Maximum heater current	---
				Resolution	---
				Overall accuracy (25°C)	---
				Influence of temperature (0 to 55°C)	---
				Conversion time	---
			Control Output section	**Control output type and points per channel**	Voltage output (for driving SSR), 1 point per channel
				Internal I/O common	PNP
				Control Period	0.1, 0.2, 0.5, 1 to 99 s
				Manipulated variable	-5% to +105%
Sensor Input section	**Temperature sensors**[*1]	• Thermocouple input: K, J, T, E, L, U, N, R, S, B, C/W, PL II • Platinum resistance thermometer input: Pt100 (3-wire type), JPt100 (3-wire type)		**Resolution**	---
	Input conversion range	±20°C of the input range[*2]		**Rated Voltage**	24 VDC
	Absolute maximum rating	± 130 mV		**Operating Load Voltage Range**	15 to 28.8 VDC
	Input impedance	20 kΩ min.		**Maximum load current**	21 mA per point, 42 mA per Unit
	Resolution	0.1°C max.		**Maximum Inrush Current**	0.3 A per point max., 10 ms max.
	Reference accuracy	*3		**Allowable load resistance**	---
	Temperature coefficient	*3		**Leakage current**	0.1 mA max.
	Cold junction compensation error	± 1.2°C[*3 *4]		**Residual voltage**	1.5 V max.
	Input disconnection detection current	Approx. 0.1 uA		**Load Short-circuit Protection**	Provided
	Input detection current	0.25 mA			
Sensor Input section	**Effect of conductor resistance**	• Thermocouple input: 0.1°C per Ω (100 Ω max. per line) • Platinum resistance thermometer input: 0.06°C per Ω (20 Ω max. per line)	**Control Output section**	**Overall accuracy (25°C)**	---
	Warm-up period	30 minutes		**Influence of temperature (0 to 55°C)**	---
	Conversion time	50 ms per Unit			

Dimensions	12 mm (W) x 100 mm (H) x 71 mm (D)	**Isolation method**	• Between sensor input and internal circuit: Power = transformer, Signal = digital isolator • Between sensor inputs: Power = transformer, Signal = digital isolator • Between control output and internal circuit: Photocoupler isolation • No isolation between control outputs
Insulation resistance	20 MΩ min. between isolated circuits (at 100 VDC)	**Dielectric strength**	510 VAC between isolated circuits for 1 minute with a leakage current of 5 mA max.
I/O power supply method	Supplied from the NX bus.	**Current capacity of I/O power supply terminals**	IOG: 0.1 A per terminal max.
NX Unit power consumption	• Connected to a CPU Unit 1.25 W max. • Connected to Communications Coupler Unit 0.95 W max.	**Current consumption from I/O power supply**	20 mA max.
Weight	75 g max.		
Circuit configuration	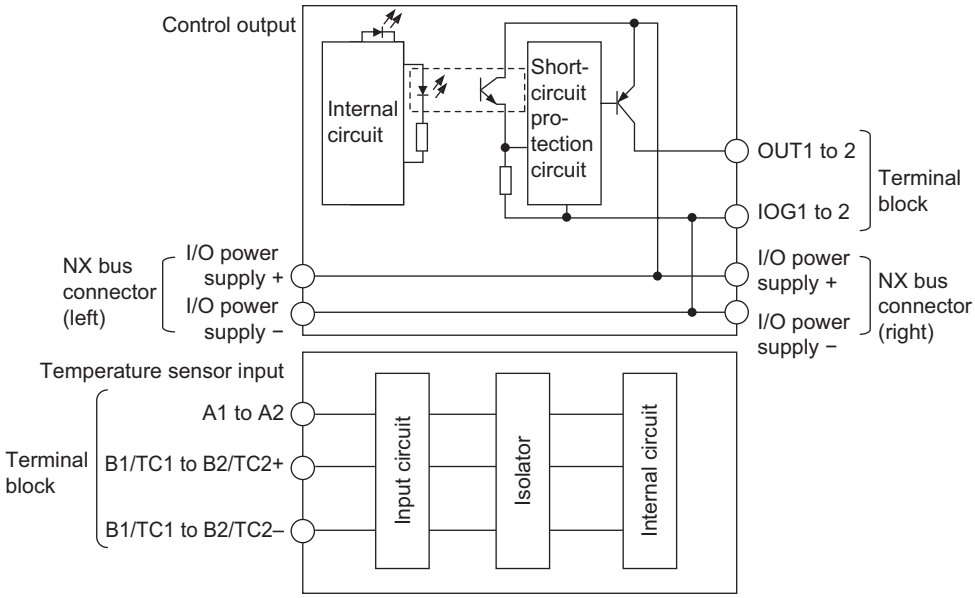		
Installation orientation and restrictions	Installation orientation: • Connected to a CPU Unit Possible in upright installation. • Connected to a Communications Coupler Unit Possible in 6 orientations. Restrictions: The cold junction compensation error is restricted according to the installation orientation of this Unit as well as the types and power consumption of adjacent Units. Refer to *A-1-4 Specifications of Cold Junction Compensation Error for Thermocouple Inputs* on page A-33 for details.		

Terminal connection diagram	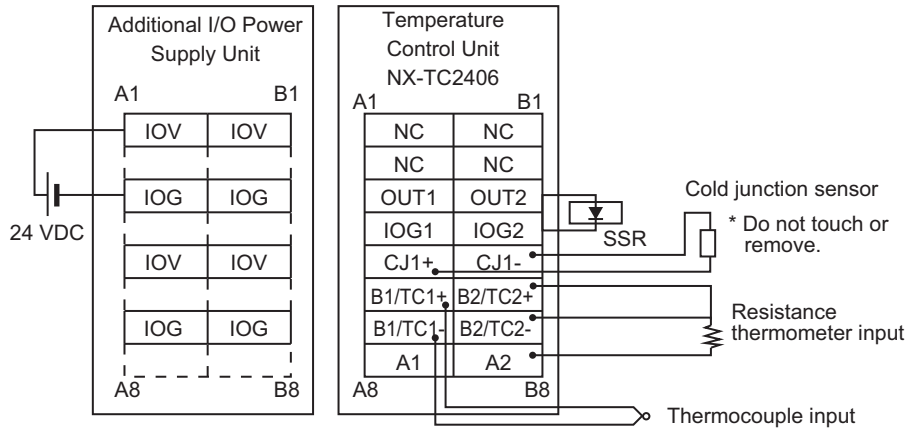

*1. Refer to *7-3-1 Input Type Settings* on page 7-11 for the setting range and input indication range of each sensor.

*2. + 20°C only for the following input type settings:

1: JPt 100
3: JPt 100
10: T
14: U

*3. Refer to *A-1-3 Table of Reference Accuracies and Temperature Coefficients* on page A-31.

For thermocouple inputs, reference accuracy and cold junction compensation error are guaranteed for a set of a Temperature Control Unit and a terminal block on which a cold junction sensor is mounted. Be sure to use the terminal block and the Temperature Control Unit with the same calibration control number together. A calibration control number is displayed both on the terminal block and the Unit. Make sure to return the terminal block to which a cold junction sensor is mounted and the Unit together.

*4. Refer to *A-1-4 Specifications of Cold Junction Compensation Error for Thermocouple Inputs* on page A-33.

Unit name		Temperature Control Unit (2-channel type)	**Model**		NX-TC2407
Number of Channels		2 channels	**Control type**		Heating/cooling control
Points per channel		• Temperature input: 1 point per channel (2 points per Unit) • CT input: none • Control input: 2 point per channel (4 points per Unit)	**External connection terminal**		Screwless Clamping Terminal Block (16 terminals)
I/O refreshing method		Free-Run Refreshing			
Indicators		TS indicator and output indicators 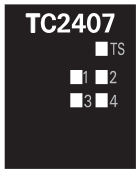	**CT Input section**	**CT current input range**	---
				Input resistance	---
				Connectable CTs	---
				Maximum heater current	---
				Resolution	---
				Overall accuracy (25°C)	---
				Influence of temperature (0 to 55°C)	---
				Conversion time	---
			Control Output section	**Control output type and points per channel**	Voltage output (for driving SSR), 2 point per channel
				Internal I/O common	PNP
				Control Period	0.1, 0.2, 0.5, 1 to 99 s
				Manipulated variable	• Heating: 0% to 105% • Cooling: 0% to 105%
Sensor Input section	**Temperature sensors**[*1]	• Thermocouple input: K, J, T, E, L, U, N, R, S, B, C/W, PL II • Platinum resistance thermometer input: Pt100 (3-wire type), JPt100 (3-wire type)		**Resolution**	---
	Input conversion range	±20°C of the input range[*2]		**Rated Voltage**	24 VDC
	Absolute maximum rating	± 130 mV		**Operating Load Voltage Range**	15 to 28.8 VDC
	Input impedance	20 kΩ min.		**Maximum load current**	21 mA per point, 84 mA per Unit
	Resolution	0.1°C max.		**Maximum Inrush Current**	0.3 A per point max., 10 ms max.
	Reference accuracy	[*3]		**Allowable load resistance**	---
	Temperature coefficient	[*3]		**Leakage current**	0.1 mA max.
	Cold junction compensation error	± 1.2°C[*3] [*4]		**Residual voltage**	1.5 V max.
	Input disconnection detection current	Approx. 0.1 uA		**Load Short-circuit Protection**	Provided
	Input detection current	0.25 mA		**Output range**	---

Sensor Input section	**Effect of conductor resistance**	• Thermocouple input: 0.1°C per Ω (100 Ω max. per line) • Platinum resistance thermometer input: 0.06°C per Ω (20 Ω max. per line)	**Control Output section**	**Overall accuracy (25°C)**	---
	Warm-up period	30 minutes		**Influence of temperature (0 to 55°C)**	---
	Conversion time	50 ms per Unit			
Dimensions		12 mm (W) x 100 mm (H) x 71 mm (D)	**Isolation method**		• Between sensor input and internal circuit: Power = transformer, Signal = digital isolator • Between sensor inputs: Power = transformer, Signal = digital isolator • Between control output and internal circuit: Photocoupler isolation • No isolation between control outputs
Insulation resistance		20 MΩ min. between isolated circuits (at 100 VDC)	**Dielectric strength**		510 VAC between isolated circuits for 1 minute with a leakage current of 5 mA max.
I/O power supply method		Supplied from the NX bus.	**Current capacity of I/O power supply terminals**		IOG: 0.1 A per terminal max.
NX Unit power consumption		• Connected to a CPU Unit 1.30 W max. • Connected to Communications Coupler Unit 1.00 W max.	**Current consumption from I/O power supply**		20 mA max.
Weight		75 g max.			
Circuit configuration		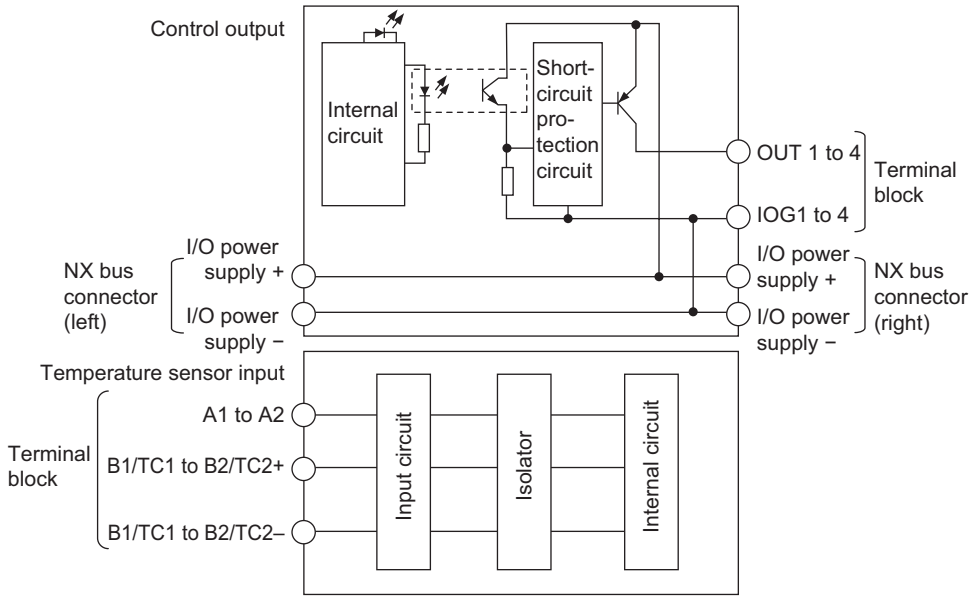			
Installation orientation and restrictions		Installation orientation: • Connected to a CPU Unit Possible in upright installation. • Connected to a Communications Coupler Unit Possible in 6 orientations. Restrictions: The cold junction compensation error is restricted according to the installation orientation of the Unit as well as the types and power consumption of adjacent Units. Refer to *A-1-4 Specifications of Cold Junction Compensation Error for Thermocouple Inputs* on page A-33 for details.			

Terminal connection diagram	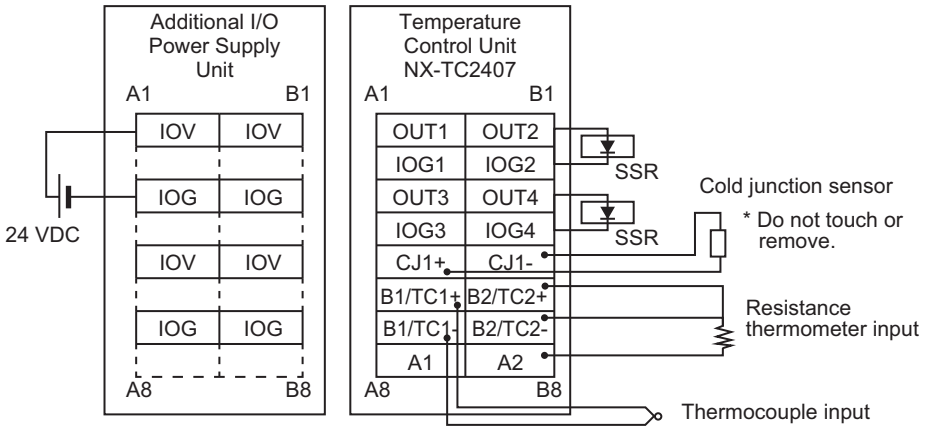

*1. Refer to *7-3-1 Input Type Settings* on page 7-11 for the setting range and input indication range of each sensor.

*2. + 20°C only for the following input type settings:
1: JPt 100
3: JPt 100
10: T
14: U

*3. Refer to *A-1-3 Table of Reference Accuracies and Temperature Coefficients* on page A-31.
For thermocouple inputs, reference accuracy and cold junction compensation error are guaranteed for a set of a Temperature Control Unit and a terminal block on which a cold junction sensor is mounted. Be sure to use the terminal block and the Temperature Control Unit with the same calibration control number together. A calibration control number is displayed both on the terminal block and the Unit. Make sure to return the terminal block to which a cold junction sensor is mounted and the Unit together.

*4. Refer to *A-1-4 Specifications of Cold Junction Compensation Error for Thermocouple Inputs* on page A-33.

Unit name		Temperature Control Unit (2-channel type)	**Model**		NX-TC2408
Number of Channels		2 channels	**Control type**		Standard control
Points per channel		• Temperature input: 1 point per channel (2 points per Unit) • CT input: none • Control input: 1 point per channel (2 points per Unit)	**External connection terminal**		Screwless Clamping Terminal Block (16 terminals)
I/O refreshing method		Free-Run Refreshing			
Indicators		TS indicator and output indicators 	**CT Input section**	**CT current input range**	---
				Input resistance	---
				Connectable CTs	---
				Maximum heater current	---
				Resolution	---
				Overall accuracy (25°C)	---
				Influence of temperature (0 to 55°C)	---
				Conversion time	---
Indicators			**Control Output section**	**Control output type and points per channel**	Linear current output 1 point per channel
				Internal I/O common	---
				Control Period	---
				Manipulated variable	-5% to +105%
Sensor Input section	**Temperature sensors**[*1]	• Thermocouple input: K, J, T, E, L, U, N, R, S, B, C/W, PL II • Platinum resistance thermometer input: Pt100 (3-wire type), JPt100 (3-wire type)		**Resolution**	1/10,000
	Input conversion range	±20°C of the input range[*2]		**Rated Voltage**	24 VDC
	Absolute maximum rating	± 130 mV		**Operating Load Voltage Range**	15 to 28.8 VDC
	Input impedance	20 kΩ min.		**Maximum load current**	---
	Resolution	0.1°C max.		**Maximum Inrush Current**	---
	Reference accuracy	[*3]		**Allowable load resistance**	350 Ω max., or greater than 350 Ω but not exceeding 600 Ω[*4]
	Temperature coefficient	[*3]		**Leakage current**	---
	Cold junction compensation error	± 1.2°C[*3] [*5]		**Residual voltage**	---
	Input disconnection detection current	Approx. 0.1 uA		**Load Short-circuit Protection**	---
	Input detection current	0.25 mA		**Output range**	0 to 20 mA, 4 to 20 mA
	Effect of conductor resistance	• Thermocouple input: 0.1°C per Ω (100 Ω max. per line) • Platinum resistance thermometer input: 0.06°C per Ω (20 Ω max. per line)		**Overall accuracy(25°C)**	± 0.3% full-scale However, 1% full-scale from 0 to 4 mA in 0 to 20 mA range

Sensor Input section	**Warm-up period**	30 minutes	**Control Output section**	**Influence of temperature (0 to 55°C)**	±0.3% (full-scale)
	Conversion time	50 ms per Unit			
Dimensions		12 mm (W) x 100 mm (H) x 71 mm (D)	**Isolation method**		• Between sensor input and internal circuit: Power = transformer, Signal = digital isolator • Between sensor inputs: Power = transformer, Signal = digital isolator • Between control output and internal circuit: Photocoupler isolation • No isolation between control outputs
Insulation resistance		20 MΩ min. between isolated circuits (at 100 VDC)	**Dielectric strength**		510 VAC between isolated circuits for 1 minute with a leakage current of 5 mA max.
I/O power supply method		Supplied from the NX bus.	**Current capacity of I/O power supply terminals**		IOG: 0.1 A per terminal max.
NX Unit power consumption		• Connected to a CPU Unit 1.25 W max. • Connected to Communications Coupler Unit 0.95 W max.	**Current consumption from I/O power supply**		20 mA max.
Weight		75 g max.			
Circuit configuration		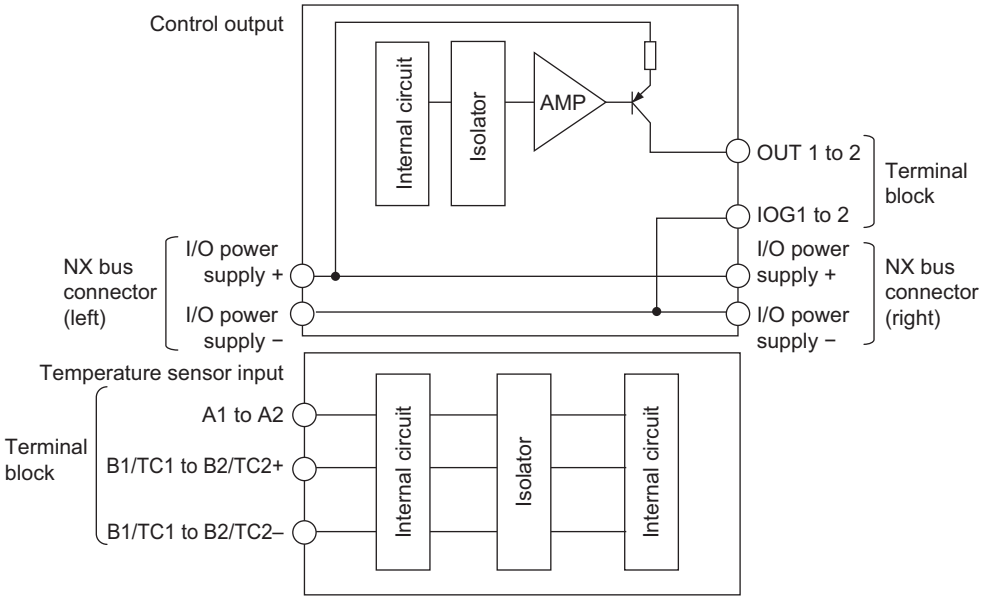			
Installation orientation and restrictions		Installation orientation: • Connected to a CPU Unit Possible in upright installation. • Connected to a Communications Coupler Unit Possible in 6 orientations. Restrictions: The cold junction compensation error is restricted according to the installation orientation of this Unit as well as the types and power consumption of adjacent Units. Refer to *A-1-4 Specifications of Cold Junction Compensation Error for Thermocouple Inputs* on page A-33 for details.			

Terminal connection diagram	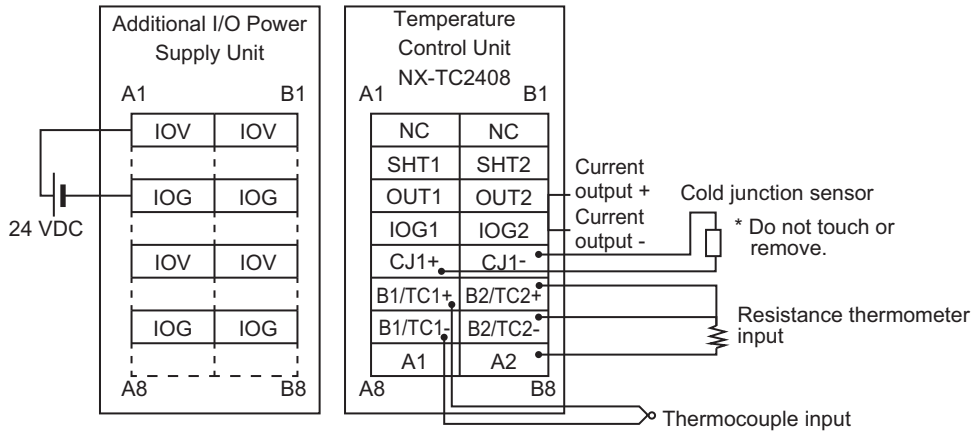 Short the SHT1 and SHT2 with a shorting cable if the allowable load resistance for linear current outputs is within the following range. • 350 Ω < allowable load resistance ≤ 600 Ω

*1. Refer to *7-3-1 Input Type Settings* on page 7-11 for the setting range and input indication range of each sensor.

*2. + 20°C only for the following input type settings:
1: JPt 100
3: JPt 100
10: T
14: U

*3. Refer to *A-1-3 Table of Reference Accuracies and Temperature Coefficients* on page A-31.
For thermocouple inputs, reference accuracy and cold junction compensation error are guaranteed for a set of a Temperature Control Unit and a terminal block on which a cold junction sensor is mounted. Be sure to use the terminal block and the Temperature Control Unit with the same calibration control number together. A calibration control number is displayed both on the terminal block and the Unit. Make sure to return the terminal block to which a cold junction sensor is mounted and the Unit together.

*4. To use an allowable load resistance greater than 350 Ω but not exceeding 600 Ω, SHT1 and SHT2 must be shorted with a shorting cable. Refer to *Switching the Allowable Load Resistance* on page 4-41 for details.

*5. Refer to *A-1-4 Specifications of Cold Junction Compensation Error for Thermocouple Inputs* on page A-33.

Temperature Control Units (Screwless Clamping Terminal Block, 24 mm Width)

Unit name		Temperature Control Unit (4-channel type)	**Model**		NX-TC3405
Number of Channels		4 channels	**Control type**		Standard control
Points per channel		• Temperature input: 1 point per channel (4 points per Unit) • CT input: 1 point per channel (4 points per Unit) • Control input: 1 point per channel (4 points per Unit)	**External connection terminal**		Screwless clamping terminal block (16 terminals × 2)
I/O refreshing method		Free-Run Refreshing			
Indicators		TS indicator and output indicators 	**CT Input section**	**CT current input range**	0 to 0.125 A
				Input resistance	Approx. 2.7 Ω
				Connectable CTs	E54-CT1, E54-CT3, E54-CT1L, E54-CT3L
				Maximum heater current	50 A AC
				Resolution	0.1 A
				Overall accuracy (25°C)	± 5% (full-scale) ± 1 digit
				Influence of temperature (0 to 55°C)	± 2% (full-scale) ± 1 digit
				Conversion time	50 ms per Unit
			Control Output section	**Control output type and points per channel**	Voltage output (for driving SSR), 1 point per channel
				Internal I/O common	PNP
				Control Period	0.1, 0.2, 0.5, 1 to 99 s
				manipulated variable	-5% to +105%
Sensor Input section	**Temperature sensors**[*1]	• Thermocouple input: K, J, T, E, L, U, N, R, S, B, C/W, PL II • Platinum resistance thermometer input: Pt100 (3-wire type), JPt100 (3-wire type)		**Resolution**	---
	Input conversion range	±20°C of the input range[*2]		**Rated Voltage**	24 VDC
	Absolute maximum rating	± 130 mV		**Operating Load Voltage Range**	15 to 28.8 VDC
	Input impedance	20 kΩ min.		**Maximum load current**	21 mA per point, 84 mA per Unit
	Resolution	0.1°C max.		**Maximum Inrush Current**	0.3 A per point max., 10 ms max.
	Reference accuracy	[*3]		**Allowable load resistance**	---
	Temperature coefficient	[*3]		**Leakage current**	0.1 mA max.
	Cold junction compensation error	± 1.2°C[*3] [*4]		**Residual voltage**	1.5 V max.
	Input disconnection detection current	Approx. 0.1 uA		**Load Short-circuit Protection**	Provided
	Input detection current	0.25 mA		**Output range**	---

Sensor Input section	**Effect of conductor resistance**	• Thermocouple input: 0.1°C per Ω (100 Ω max. per line) • Platinum resistance thermometer input: 0.06°C per Ω (20 Ω max. per line)	**Control Output section**	**Overall accuracy (25°C)**	---
	Warm-up period	30 minutes		**Influence of temperature (0 to 55°C)**	---
	Conversion time	50 ms per Unit			
Dimensions		24 mm (W) x 100 mm (H) x 71 mm (D)	**Isolation method**		• Between sensor input and internal circuit: Power = transformer, Signal = digital isolator • Between sensor inputs: Power = transformer, Signal = digital isolator • No isolation between internal circuits and CT inputs • Between control output and internal circuit: Photocoupler isolation • No isolation between control outputs
Insulation resistance		20 MΩ min. between isolated circuits (at 100 VDC)	**Dielectric strength**		510 VAC between isolated circuits for 1 minute with a leakage current of 5 mA max.
I/O power supply method		Supplied from the NX bus.	**Current capacity of I/O power supply terminals**		IOG: 0.1 A per terminal max.
NX Unit power consumption		• Connected to a CPU Unit 1.80 W max. • Connected to Communications Coupler Unit 1.35 W max.	**Current consumption from I/O power supply**		20 mA max.
Weight		140 g max.			
Circuit configuration		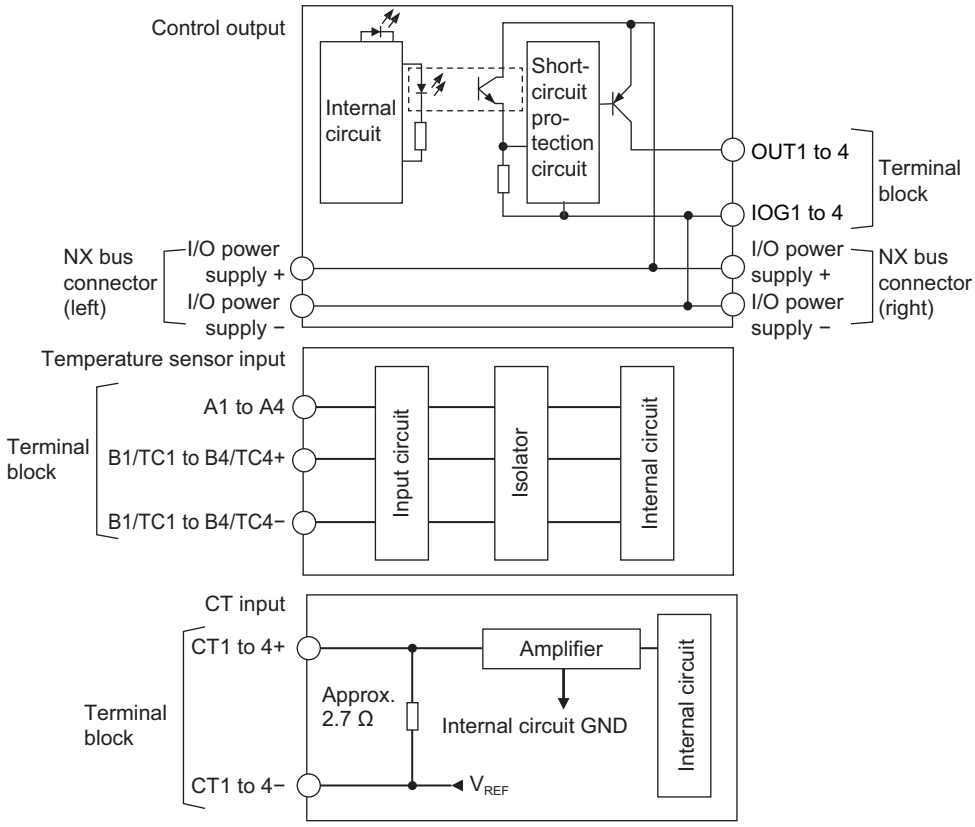			

Installation orientation and restrictions	Installation orientation: • Connected to a CPU Unit Possible in upright installation. • Connected to a Communications Coupler Unit Possible in 6 orientations. Restrictions: The cold junction compensation error is restricted according to the installation orientation of this Unit as well as the types and power consumption of adjacent Units. Refer to *A-1-4 Specifications of Cold Junction Compensation Error for Thermocouple Inputs* on page A-33 for details.
Terminal connection diagram	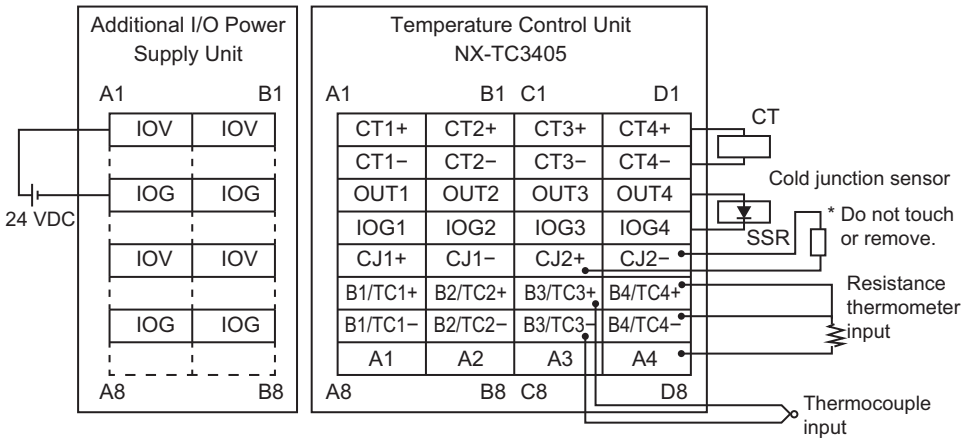

*1. Refer to *7-3-1 Input Type Settings* on page 7-11 for the setting range and input indication range of each sensor.

*2. + 20°C only for the following input type settings:
1: JPt 100
3: JPt 100
10: T
14: U

*3. Refer to *A-1-3 Table of Reference Accuracies and Temperature Coefficients* on page A-31.
For thermocouple inputs, reference accuracy and cold junction compensation error are guaranteed for a set of a Temperature Control Unit and a terminal block on which a cold junction sensor is mounted. Be sure to use the terminal block and the Temperature Control Unit with the same calibration control number together. A calibration control number is displayed both on the terminal block and the Unit. In order to distinguish left and right terminal blocks, each terminal block has either a letter "L" (left side) or "R" (right side) appended at the end of a calibration control number. Make sure to return the terminal block to which a cold junction sensor is mounted and the Unit together.

*4. Refer to *A-1-4 Specifications of Cold Junction Compensation Error for Thermocouple Inputs* on page A-33.

Unit name		Temperature Control Unit (4-channel type)	**Model**		NX-TC3406
Number of Channels		4 channels	**Control type**		Standard control
Points per channel		• Temperature input: 1 point per channel (4 points per Unit) • CT input: none • Control input: 1 point per channel (4 points per Unit)	**External connection terminal**		Screwless clamping terminal block (16 terminals × 2)
I/O refreshing method		Free-Run Refreshing			
Indicators		TS indicator and output indicators 	**CT Input section**	**CT current input range**	---
				Input resistance	---
				Connectable CTs	---
				Maximum heater current	---
				Resolution	---
				Overall accuracy (25°C)	---
				Influence of temperature (0 to 55°C)	---
				Conversion time	---
			Control Output section	**Control output type and points per channel**	Voltage output (for driving SSR), 1 point per channel
				Internal I/O common	PNP
				Control Period	0.1, 0.2, 0.5, 1 to 99 s
				manipulated variable	-5% to +105%
Sensor Input section	**Temperature sensors**[*1]	• Thermocouple input: K, J, T, E, L, U, N, R, S, B, C/W, PL II • Platinum resistance thermometer input: Pt100 (3-wire type), JPt100 (3-wire type)		**Resolution**	---
	Input conversion range	±20°C of the input range[*2]		**Rated Voltage**	24 VDC
	Absolute maximum rating	± 130 mV		**Operating Load Voltage Range**	15 to 28.8 VDC
	Input impedance	20 kΩ min.		**Maximum load current**	21 mA per point, 84 mA per Unit
	Resolution	0.1°C max.		**Maximum Inrush Current**	0.3 A per point max., 10 ms max.
	Reference accuracy	*3		**Allowable load resistance**	---
	Temperature coefficient	*3		**Leakage current**	0.1 mA max.
	Cold junction compensation error	± 1.2°C[*3] [*4]		**Residual voltage**	1.5 V max.
	Input disconnection detection current	Approx. 0.1 uA		**Load Short-circuit Protection**	Provided
	Input detection current	0.25 mA		**Output range**	---
	Effect of conductor resistance	• Thermocouple input: 0.1°C per Ω (100 Ω max. per line) • Platinum resistance thermometer input: 0.06°C per Ω (20 Ω max. per line)		**Overall accuracy (25°C)**	---
	Warm-up period	30 minutes		**Influence of temperature (0 to 55°C)**	---
	Conversion time	50 ms per Unit			

Dimensions	24 mm (W) x 100 mm (H) x 71 mm (D)	**Isolation method**	• Between sensor input and internal circuit: Power = transformer, Signal = digital isolator • Between sensor inputs: Power = transformer, Signal = digital isolator • Between control output and internal circuit: Photocoupler isolation • No isolation between control outputs
Insulation resistance	20 MΩ min. between isolated circuits (at 100 VDC)	**Dielectric strength**	510 VAC between isolated circuits for 1 minute with a leakage current of 5 mA max.
I/O power supply method	Supplied from the NX bus.	**Current capacity of I/O power supply terminals**	IOG: 0.1 A per terminal max.
NX Unit power consumption	• Connected to a CPU Unit 1.70 W max. • Connected to Communications Coupler Unit 1.25 W max.	**Current consumption from I/O power supply**	20 mA max.
Weight	140 g max.		
Circuit configuration	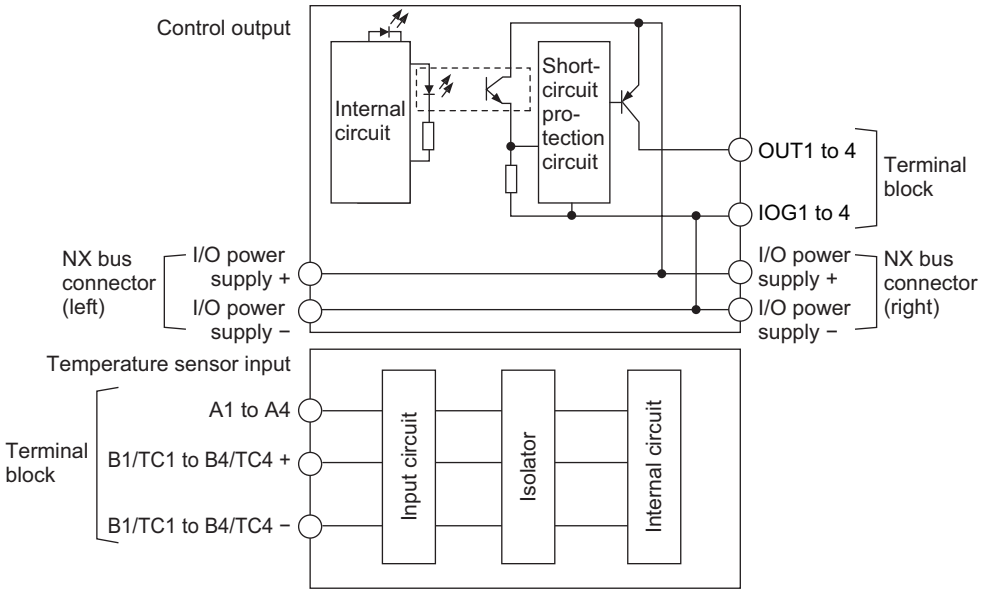		
Installation orientation and restrictions	Installation orientation: • Connected to a CPU Unit Possible in upright installation. • Connected to a Communications Coupler Unit Possible in 6 orientations. Restrictions: The cold junction compensation error is restricted according to the installation orientation of this Unit as well as the types and power consumption of adjacent Units. Refer to *A-1-4 Specifications of Cold Junction Compensation Error for Thermocouple Inputs* on page A-33 for details.		

Terminal connection diagram

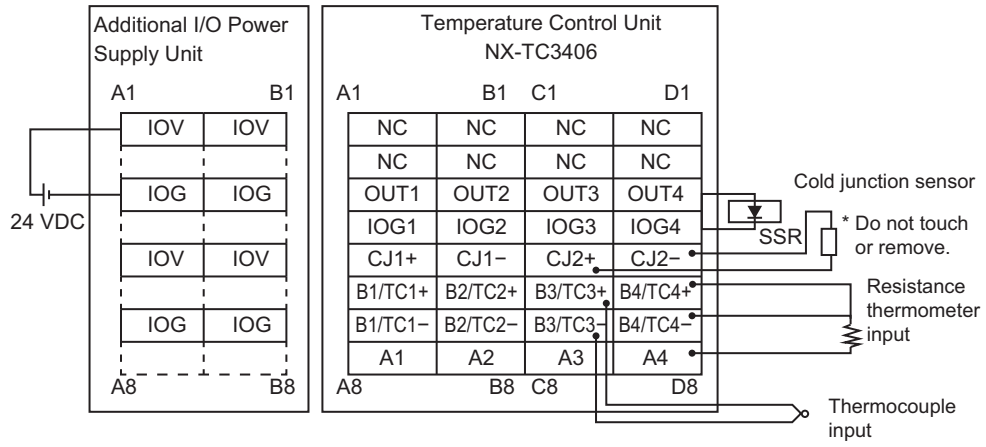

*1. Refer to *7-3-1 Input Type Settings* on page 7-11 for the setting range and input indication range of each sensor.

*2. + 20°C only for the following input type settings:
1: JPt 100
3: JPt 100
10: T
14: U

*3. Refer to *A-1-3 Table of Reference Accuracies and Temperature Coefficients* on page A-31.
For thermocouple inputs, reference accuracy and cold junction compensation error are guaranteed for a set of a Temperature Control Unit and a terminal block on which a cold junction sensor is mounted. Be sure to use the terminal block and the Temperature Control Unit with the same calibration control number together. A calibration control number is displayed both on the terminal block and the Unit. In order to distinguish left and right terminal blocks, each terminal block has either a letter "L" (left side) or "R" (right side) appended at the end of a calibration control number. Make sure to return the terminal block to which a cold junction sensor is mounted and the Unit together.

*4. Refer to *A-1-4 Specifications of Cold Junction Compensation Error for Thermocouple Inputs* on page A-33.

Unit name		Temperature Control Unit (4-channel type)	**Model**		NX-TC3407
Number of Channels		4 channels	**Control type**		Heating/cooling control
Points per channel		• Temperature input: 1 point per channel (4 points per Unit) • CT input: none • Control input: 2 point per channel (8 points per Unit)	**External connection terminal**		Screwless clamping terminal block (16 terminals × 2)
I/O refreshing method		Free-Run Refreshing			
Indicators		TS indicator and output indicators 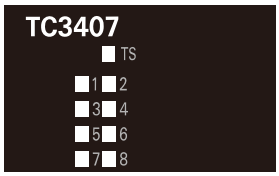	**CT Input section**	**CT current input range**	---
				Input resistance	---
				Connectable CTs	---
				Maximum heater current	---
				Resolution	---
				Overall accuracy (25°C)	---
				Influence of temperature (0 to 55°C)	---
				Conversion time	---
			Control Output section	**Control output type and points per channel**	Voltage output (for driving SSR), 2 point per channel
				Internal I/O common	PNP
				Control Period	0.1, 0.2, 0.5, 1 to 99 s
				manipulated variable	• Heating: 0% to 105% • Cooling: 0% to 105%
Sensor Input section	**Temperature sensors**[*1]	• Thermocouple input: K, J, T, E, L, U, N, R, S, B, C/W, PL II • Platinum resistance thermometer input: Pt100 (3-wire type), JPt100 (3-wire type)		**Resolution**	---
	Input conversion range	±20°C of the input range[*2]		**Rated Voltage**	24 VDC
	Absolute maximum rating	± 130 mV		**Operating Load Voltage Range**	15 to 28.8 VDC
	Input impedance	20 kΩ min.		**Maximum load current**	21 mA per point, 168 mA per Unit
	Resolution	0.1°C max.		**Maximum Inrush Current**	0.3 A per point max., 10 ms max.
	Reference accuracy	[*3]		**Allowable load resistance**	---
	Temperature coefficient	[*3]		**Leakage current**	0.1 mA max.
	Cold junction compensation error	± 1.2°C[*3] [*4]		**Residual voltage**	1.5 V max.
	Input disconnection detection current	Approx. 0.1 uA		**Load Short-circuit Protection**	Provided
	Input detection current	0.25 mA		**Output range**	---
Sensor Input section	**Effect of conductor resistance**	• Thermocouple input: 0.1°C per Ω (100 Ω max. per line) • Platinum resistance thermometer input: 0.06°C per Ω (20 Ω max. per line)	**Control Output section**	**Overall accuracy (25°C)**	---
	Warm-up period	30 minutes		**Influence of temperature (0 to 55°C)**	---
	Conversion time	50 ms per Unit			

Dimensions	24 mm (W) x 100 mm (H) x 71 mm (D)	**Isolation method**	• Between sensor input and internal circuit: Power = transformer, Signal = digital isolator • Between sensor inputs: Power = transformer, Signal = digital isolator • Between control output and internal circuit: Photocoupler isolation • No isolation between control outputs
Insulation resistance	20 MΩ min. between isolated circuits (at 100 VDC)	**Dielectric strength**	510 VAC between isolated circuits for 1 minute with a leakage current of 5 mA max.
I/O power supply method	Supplied from the NX bus.	**Current capacity of I/O power supply terminals**	IOG: 0.1 A per terminal max.
NX Unit power consumption	• Connected to a CPU Unit 1.75 W max. • Connected to Communications Coupler Unit 1.30 W max.	**Current consumption from I/O power supply**	20 mA max.
Weight	140 g max.		
Circuit configuration	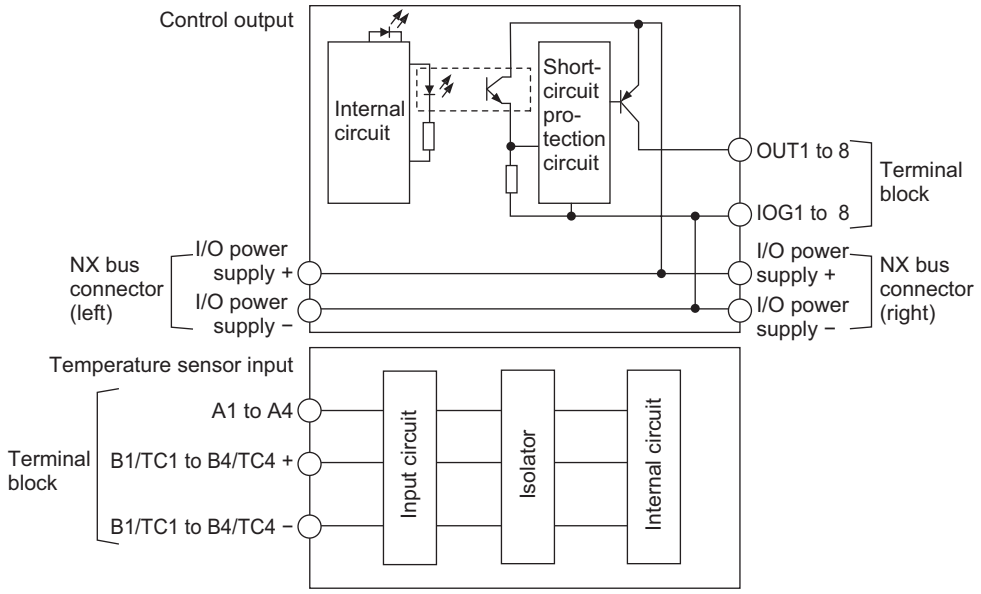		
Installation orientation and restrictions	Installation orientation: • Connected to a CPU Unit Possible in upright installation. • Connected to a Communications Coupler Unit Possible in 6 orientations. Restrictions: The cold junction compensation error is restricted according to the installation orientation of this Unit as well as the types and power consumption of adjacent Units. Refer to *A-1-4 Specifications of Cold Junction Compensation Error for Thermocouple Inputs* on page A-33 for details.		

Terminal connection diagram

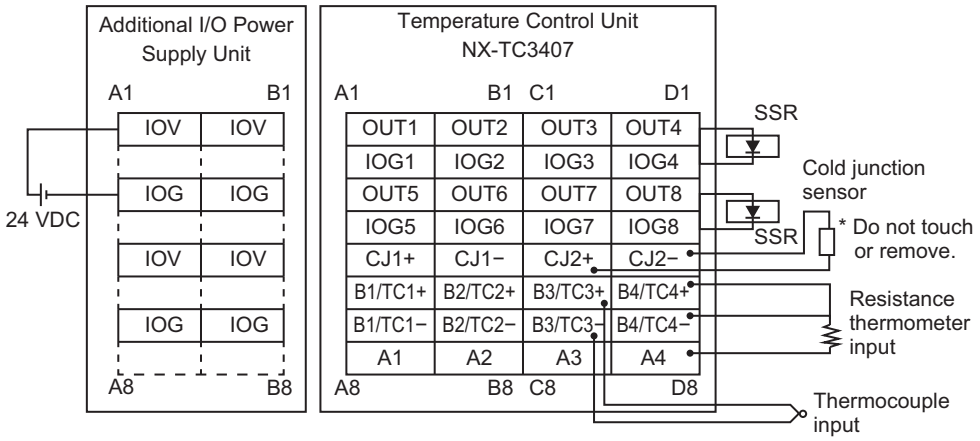

*1. Refer to *7-3-1 Input Type Settings* on page 7-11 for the setting range and input indication range of each sensor.

*2. + 20°C only for the following input type settings:
1: JPt 100
3: JPt 100
10: T
14: U

*3. Refer to *A-1-3 Table of Reference Accuracies and Temperature Coefficients* on page A-31.
For thermocouple inputs, reference accuracy and cold junction compensation error are guaranteed for a set of a Temperature Control Unit and a terminal block on which a cold junction sensor is mounted. Be sure to use the terminal block and the Temperature Control Unit with the same calibration control number together. A calibration control number is displayed both on the terminal block and the Unit. In order to distinguish left and right terminal blocks, each terminal block has either a letter "L" (left side) or "R" (right side) appended at the end of a calibration control number. Make sure to return the terminal block to which a cold junction sensor is mounted and the Unit together.

*4. Refer to *A-1-4 Specifications of Cold Junction Compensation Error for Thermocouple Inputs* on page A-33.

Unit name		Temperature Control Unit (4-channel type)	**Model**		NX-TC3408
Number of Channels		4 channels	**Control type**		Heating/cooling control
Points per channel		• Temperature input: 1 point per channel (4 points per Unit) • CT input: none • Control input: 1 point per channel (4 points per Unit)	**External connection terminal**		Screwless clamping terminal block (16 terminals × 2)
I/O refreshing method		Free-Run Refreshing			
Indicators		TS indicator and output indicators 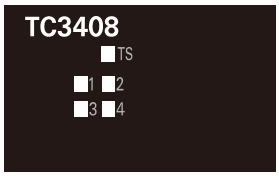	**CT Input section**	**CT current input range**	---
				Input resistance	---
				Connectable CTs	---
				Maximum heater current	---
				Resolution	---
				Overall accuracy (25°C)	---
				Influence of temperature (0 to 55°C)	---
				Conversion time	---
			Control Output section	**Control output type and points per channel**	Linear current output, 1 point per channel
				Internal I/O common	---
				Control Period	---
				manipulated variable	-5% to 105%
Sensor Input section	**Temperature sensors**[*1]	• Thermocouple input: K, J, T, E, L, U, N, R, S, B, C/W, PL II • Platinum resistance thermometer input: Pt100 (3-wire type), JPt100 (3-wire type)		**Resolution**	1/10,000
	Input conversion range	±20°C of the input range[*2]		**Rated Voltage**	24 VDC
	Absolute maximum rating	± 130 mV		**Operating Load Voltage Range**	15 to 28.8 VDC
	Input impedance	20 kΩ min.		**Maximum load current**	---
	Resolution	0.1°C max.		**Maximum Inrush Current**	---
	Reference accuracy	[*3]		**Allowable load resistance**	350 Ω max., or greater than 350 Ω but not exceeding 600 Ω[*4]
	Temperature coefficient	[*3]		**Leakage current**	---
	Cold junction compensation error	± 1.2°C[*3] [*5]		**Residual voltage**	---
	Input disconnection detection current	Approx. 0.1 uA		**Load Short-circuit Protection**	---
	Input detection current	0.25 mA		**Output range**	0 to 20 mA, 4 to 20 mA
	Effect of conductor resistance	• Thermocouple input: 0.1°C per Ω (100 Ω max. per line) • Platinum resistance thermometer input: 0.06°C per Ω (20 Ω max. per line)		**Overall accuracy (25°C)**	± 0.3% full-scale However, 1% full-scale from 0 to 4 mA in 0 to 20 mA range
	Warm-up period	30 minutes		**Influence of temperature (0 to 55°C)**	±0.3% (full-scale)
	Conversion time	50 ms per Unit			

Dimensions	24 mm (W) x 100 mm (H) x 71 mm (D)	**Isolation method**	• Between sensor input and internal circuit: Power = transformer, Signal = digital isolator • Between sensor inputs: Power = transformer, Signal = digital isolator • Between control output and internal circuit: Photocoupler isolation • No isolation between control outputs
Insulation resistance	20 MΩ min. between isolated circuits (at 100 VDC)	**Dielectric strength**	510 VAC between isolated circuits for 1 minute with a leakage current of 5 mA max.
I/O power supply method	Supplied from the NX bus.	**Current capacity of I/O power supply terminals**	IOG: 0.1 A per terminal max.
NX Unit power consumption	• Connected to a CPU Unit 1.65 W max. • Connected to Communications Coupler Unit 1.25 W max.	**Current consumption from I/O power supply**	30 mA max.
Weight	140 g max.		
Circuit configuration	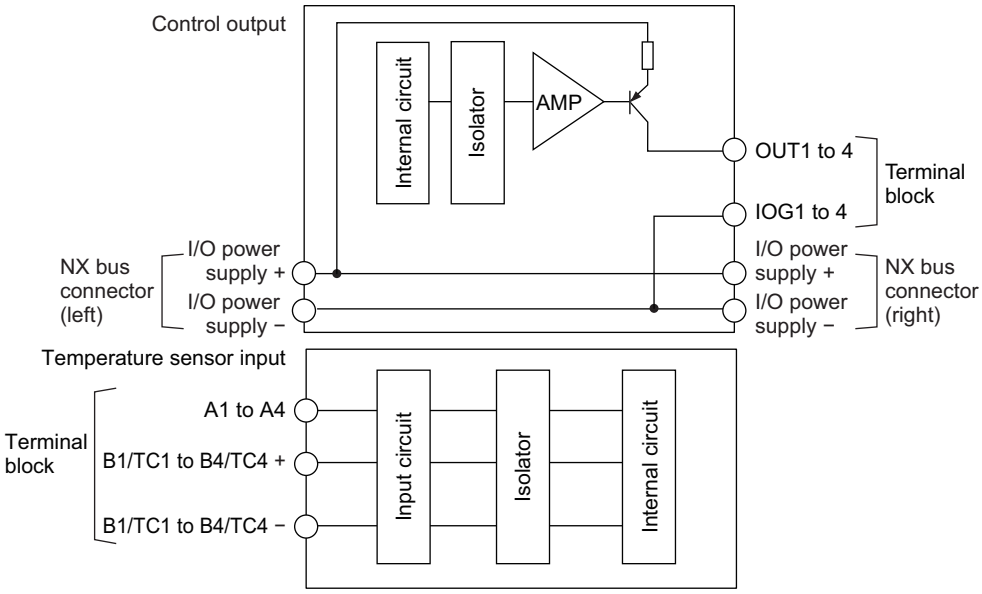		
Installation orientation and restrictions	Installation orientation: • Connected to a CPU Unit Possible in upright installation. • Connected to a Communications Coupler Unit Possible in 6 orientations. Restrictions: The cold junction compensation error is restricted according to the installation orientation of the Unit as well as the types and power consumption of adjacent Units. Refer to *A-1-4 Specifications of Cold Junction Compensation Error for Thermocouple Inputs* on page A-33 for details.		

Terminal connection diagram

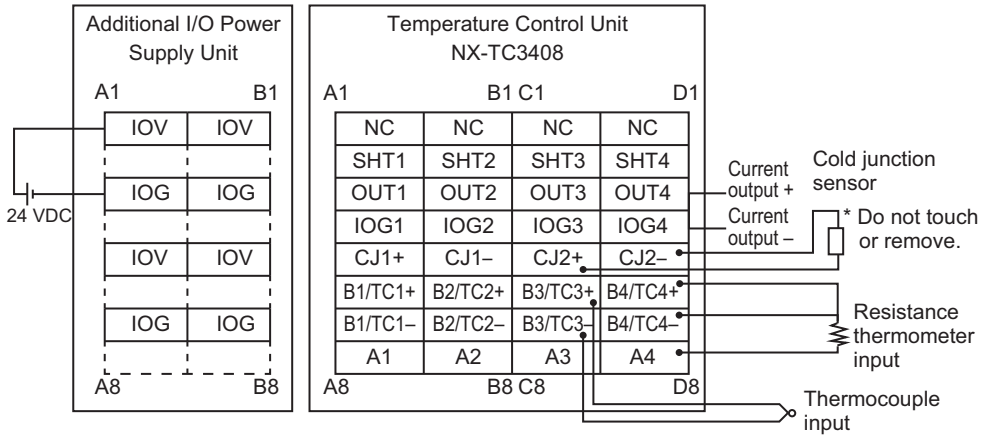

Short the SHT1 and SHT2 with a shorting cable if the allowable load resistance for the OUT1 and OUT2 linear current outputs is within the following range.
• 350 Ω < allowable load resistance ≤ 600 Ω

Short the SHT3 and SHT4 with a shortening cable if the allowable load resistance for the OUT3 and OUT4 linear current outputs is within the following range.
• 350 Ω < allowable load resistance ≤ 600 Ω

*1. Refer to *7-3-1 Input Type Settings* on page 7-11 for the setting range and input indication range of each sensor.

*2. + 20°C only for the following input type settings:
1: JPt 100
3: JPt 100
10: T
14: U

*3. Refer to *A-1-3 Table of Reference Accuracies and Temperature Coefficients* on page A-31.
For thermocouple inputs, reference accuracy and cold junction compensation error are guaranteed for a set of a Temperature Control Unit and a terminal block on which a cold junction sensor is mounted. Be sure to use the terminal block and the Temperature Control Unit with the same calibration control number together. A calibration control number is displayed both on the terminal block and the Unit. In order to distinguish left and right terminal blocks, each terminal block has either a letter "L" (left side) or "R" (right side) appended at the end of a calibration control number. Make sure to return the terminal block to which a cold junction sensor is mounted and the Unit together.

*4. To use an allowable load resistance greater than 350 Ω but not exceeding 600 Ω, either SHT1 and SHT2, or SHT3 and SHT4 must be shorted with a shorting cable.
Refer to *Switching the Allowable Load Resistance* on page 4-41 for details.

*5. Refer to *A-1-4 Specifications of Cold Junction Compensation Error for Thermocouple Inputs* on page A-33.

A-1-3 Table of Reference Accuracies and Temperature Coefficients

This table lists the reference accuracies and temperature coefficients for each input type and measured temperature.

To convert the temperature unit from Celsius to Fahrenheit, use the following equation.

Fahrenheit temperature (°F) = Celsius temperature (°C) x 1.8 + 32

Set values	Input type		Measurement temperature (°C)	Reference accuracy °C (%)*2	Temperature coefficient °C/°C*3 (ppm/°C*4)
	Sensor	Input setting range (°C)*1			
0	Pt100	-200 to 850	-200 to 300	±1.0 (±0.1%)	±0.1 (±100 ppm/°C)
			300 to 700	±2.0 (±0.2%)	±0.2 (±200 ppm/°C)
			700 to 850	±2.5 (±0.25%)	±0.25 (±250 ppm/°C)
1	Pt100	-199.9 to 500.0	-199.9 to 300.0	±0.8 (±0.12%)	±0.1 (±150 ppm/°C)
			300.0 to 500.0	±0.8 (±0.12%)	±0.2 (±300 ppm/°C)
2	Pt100	0.0 to 100.0	0.0 to 100.0	±0.8 (±0.8%)	±0.1 (±1000 ppm/°C)
3	JPt100	-199.9 to 500.0	-199.9 to 300.0	±0.8 (±0.12%)	±0.1 (±150 ppm/°C)
			300.0 to 500.0	±0.8 (±0.12%)	±0.2 (±300 ppm/°C)
4	JPt100	0.0 to 100.0	0.0 to 100.0	±0.8 (±0.8%)	±0.1 (±1000 ppm/°C)
5	K	-200 to 1300	-200 to -100	±1.5 (±0.1%)	±0.15 (±100 ppm/°C)
			-100 to 400		±0.30 (±200 ppm/°C)
			400 to 1300		±0.38 (±250 ppm/°C)
6	K	-20.0 to 500.0	-20.0 to 400.0	±1.0 (±0.2%)	±0.30 (±600 ppm/°C)
			400.0 to 500.0		±0.38 (±760 ppm/°C)
7	J	-100 to 850	-100 to 400	±1.4 (±0.15%)	±0.14 (±150 ppm/°C)
			400 to 850	±1.2 (±0.13%)	±0.28 (±300 ppm/°C)
8	J	-20.0 to 400.0	-20.0 to 400.0	±1.0 (±0.24%)	±0.14 (±350 ppm/°C)
9	T	-200 to 400	-200 to -100	±1.2 (±0.2%)	±0.30 (±500 ppm/°C)
			-100 to 400		±0.12 (±200 ppm/°C)
10	T	-199.9 to 400.0	-199.9 to -100.0	±1.2 (±0.2%)	±0.30 (±500 ppm/°C)
			-100.0 to 400.0		±0.12 (±200 ppm/°C)
11	E	-200 to 600	-200 to 400	±1.2 (±0.15%)	±0.12 (±150 ppm/°C)
			400 to 600	±2.0 (±0.25%)	±0.24 (±300 ppm/°C)
12	L	-100 to 850	-100 to 300	±1.1 (±0.12%)	±0.11 (±120 ppm/°C)
			300 to 700	±2.2 (±0.24%)	±0.22 (±240 ppm/°C)
			700 to 850		±0.28 (±300 ppm/°C)
13	U	-200 to 400	-200 to 400	±1.2 (±0.2%)	±0.12 (±200 ppm/°C)
14	U	-199.9 to 400.0	-199.9 to 400.0	±1.2 (±0.2%)	±0.12 (±200 ppm/°C)
15	N	-200 to 1300	-200 to 400	±1.5 (±0.1%)	±0.30 (±200 ppm/°C)
			400 to 1000		
			1000 to 1300		±0.38 (±250 ppm/°C)
16	R	0 to 1700	0 to 500	±1.75 (±0.11%)	±0.44 (±260 ppm/°C)
			500 to 1200	±2.5 (±0.15%)	
			1200 to 1700		
17	S	0 to 1700	0 to 1700	±2.5 (±0.15%)	±0.44 (±260 ppm/°C)
18	B	0 to 1800	0 to 400	Reference accuracy cannot be guaranteed	Reference accuracy cannot be guaranteed
			400 to 1200	±3.6 (±0.2%)	±0.45 (±250 ppm/°C)
			1200 to 1800	±5.0 (±0.28%)	±0.54 (±300 ppm/°C)
19	C/W	0 to 2300	0 to 300	±1.15 (±0.05%)	±0.46 (±200 ppm/°C)
			300 to 800	±2.3 (±0.1%)	
			800 to 1500	±3.0 (±0.13%)	
			1500 to 2300		±0.691 (±300 ppm/°C)
20	PL II	0 to 1300	0 to 400	±1.3 (±0.1%)	±0.23 (±200 ppm/°C)
			400 to 800	±2.0 (±0.15%)	±0.39 (±300 ppm/°C
			800 to 1300		±0.65 (±500 ppm/°C)

*1. The decimal point position of each input type is "no decimal point" or "1 decimal place". In calculating the measurement value error, please round up the calculation result to the decimal point position of the temperature range.

*2. The overall accuracy of the Temperature Control Unit is guaranteed for a set consisting of a cold junction sensor that is mounted on the terminal block and a Temperature Control Unit. Be sure to use the terminal block and Temperature Control Unit with the same calibration control number together. For the 24mm width model, also be sure the left and right terminal blocks are correctly attached.

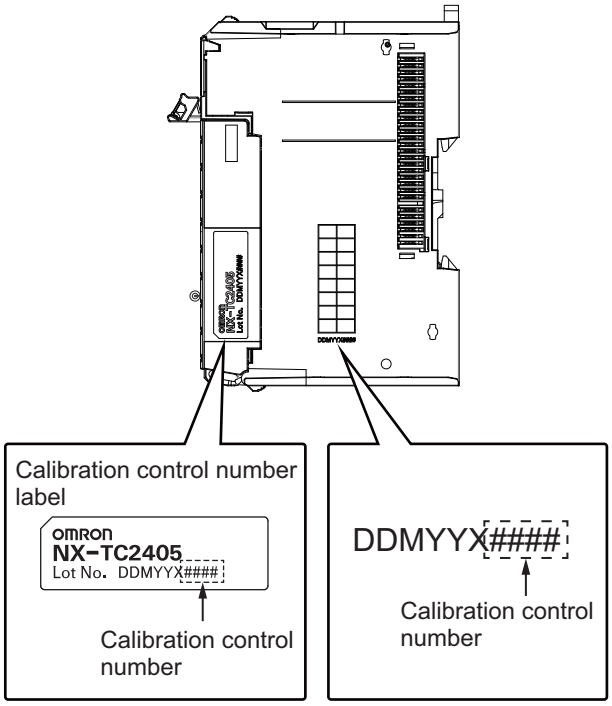

*3. An error for a measured value when the ambient temperature changes by 1°C.
The following formula is used to calculate the error of the measured value for thermocouple inputs.
Overall accuracy = Reference accuracy + Temperature characteristic x Change in the ambient temperature + Cold junction compensation error
For resistance thermometer inputs, there is no cold junction compensation error.

(Calculation example)

- Conditions

Item	Description
Ambient temperature	30°C
Measured value	100°C
Thermocouple	K: -200 to 1300°C

- The characteristic values are formulated from the datasheet or reference accuracy and temperature coefficient table under the above conditions

Item	Description
Reference accuracy	-100 to 400°C: ±1.5°C
Temperature coefficient	-100 to 400°C: ±0.30°C/°C
Change in the ambient temperature	25°C -> 30°C 5 deg
Cold junction compensation error	±1.2°C

Therefore,
Overall accuracy = Reference accuracy + Temperature characteristic x Change in the ambient temperature + Cold junction compensation error
= ±1.5°C +(±0.30°C/°C) x 5 deg + ±1.2°C
= ±4.2°C
As the condition for thermocouple is -200 to 1300°C without decimal point. the calculation result is round up after the decimal point. Then the overall accuracy is ±5°C.

*4. The ppm value is for the full scale of the temperature range.

A-1-4 Specifications of Cold Junction Compensation Error for Thermocouple Inputs

This section describes the cold junction compensation errors for thermocouple inputs, which differ by installation orientation of this Unit, type of adjacent Units, and current consumed by the adjacent Units [*1].

When the Adjacent Units are Temperature Control Units

This section describes the cold junction compensation errors when the adjacent Units are Temperature Control Units. The error differs by installation orientation.

● For upright installation

The cold junction compensation error is ±1.2°C.

However, there are some exceptions according to the input type and temperature range. The conditions and the cold junction compensation errors are given in the following table.

Input type and temperature range	Cold junction compensation error
T below -90°C	±3.0°C
J, E, K and N below -100°C	
U, L and PLII	
R and S below 200°C	
B below 400°C	Not guaranteed
C/W	±3.0°C

● For other than upright installation

The cold junction compensation error is ±4.0°C.

However, there are some exceptions according to the input type and temperature range. The conditions and the cold junction compensation errors are given in the following table.

Input type and temperature range	Cold junction compensation error
T below -90°C	±7.0°C
J, E, K and N below -100°C	
U, L and PLII	
R and S below 200°C	
B below 400°C	Not guaranteed
C/W	±9.0°C

When the Adjacent Units are not Temperature Control Units

This section describes the cold junction compensation errors when the adjacent Units are not Temperature Control Units. The error differs by the installation orientation and power consumption by the adjacent Units.

● For upright installation when the power consumption is 1.5 W or less for both the left and right adjacent Units

The cold junction compensation error is ±1.2°C.

However, there are some exceptions according to the input type and temperature range. The conditions and the cold junction compensation errors are given in the following table.

Input type and temperature range	Cold junction compensation error
T below -90°C	±3.0°C
J, E, K and N below -100°C	
U, L and PLII	
R and S below 200°C	
B below 400°C	Not guaranteed
C/W	±3.0°C

● For upright installation when the power consumption of either the left or the right adjacent Unit is more than 1.5 W but less than 3.9 W, or for any installation other than upright when the power consumption of both the left and right adjacent Units is less than 3.9 W

The cold junction compensation error is ±4.0°C.

However, there are some exceptions according to the input type and temperature range. The conditions and the cold junction compensation errors are given in the following table.

Input type and temperature range	Cold junction compensation error
T below -90°C	±7.0°C
J, E, K and N below -100°C	
U, L and PLII	
R and S below 200°C	
B below 400°C	Not guaranteed
C/W	±9.0°C

● When the power consumption exceeds 3.9 W for either the left or right adjacent Unit

Do not use the Unit under this condition because the cold junction compensation error is not guaranteed in this condition.

● Power consumption of adjacent Units

The power consumption of adjacent Units is the total of the following values.

- The power consumption of the NX Unit power supply and I/O power supply for the NX Units adjacent to the Temperature Control Unit. If the adjacent Unit is an Input Unit, it is the total power consumption according to the input current.

A-2 Dimensions

A-2-1 Screwless Clamping Terminal Block Type

12 mm Width

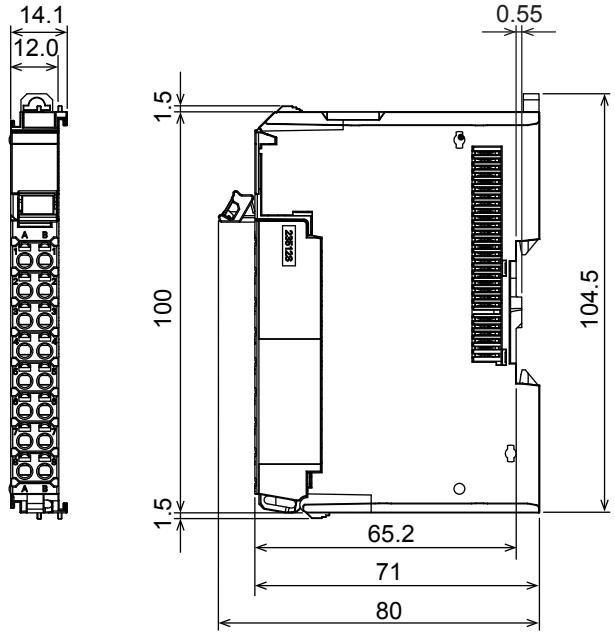

(Unit: mm)

24 mm Width

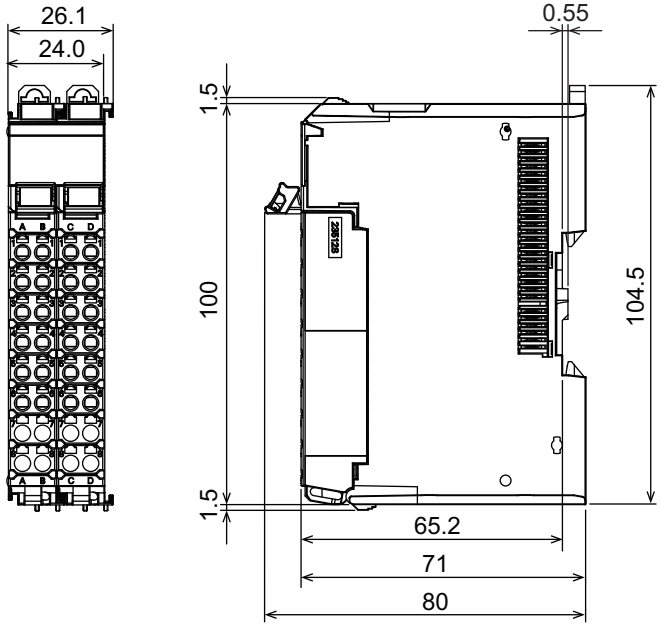

(Unit: mm)

Installation Height

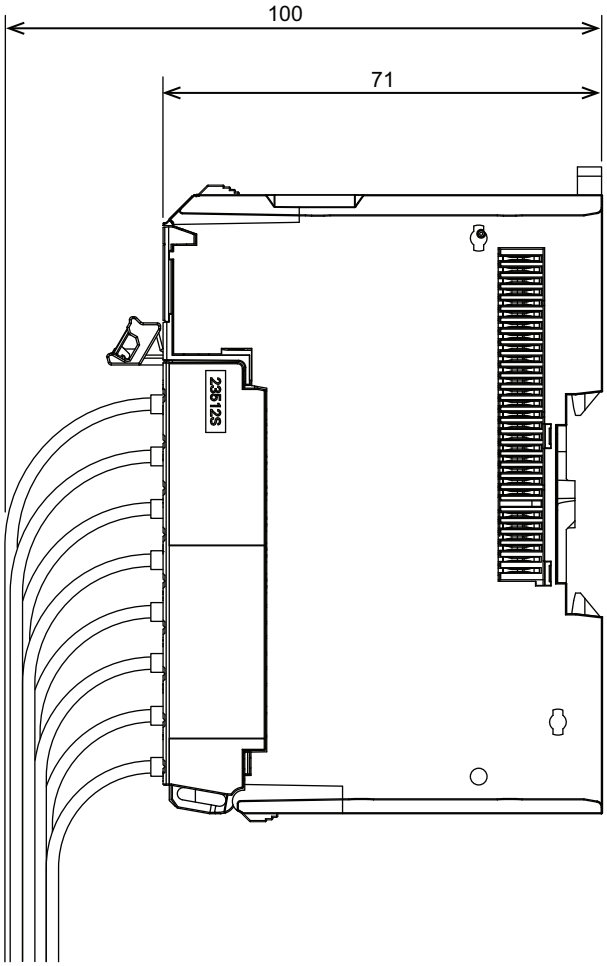

(Unit: mm)

A-3 List of NX Objects

This section describes the NX objects of the Temperature Control Units.

The method to access NX objects through instructions or other messages depends on where the NX Unit is connected. If the NX Unit is connected to a CPU Unit, access is possible with the Read NX Unit Object instruction and the Write NX Unit Object instruction. When the NX Unit is connected to a Communications Coupler Unit, the method depends on the connected communications master and Communications Coupler Unit. Refer to the user's manual for the connected Communications Coupler Unit for method to use messages to access NX objects on Slave Terminals.

A-3-1 Format of Object Descriptions

In this manual, NX objects are described with the following format.

Index (hex)	Subindex (hex)	Object name	Default value	Data range	Unit	Data type	Acce ss	I/O alloca-tion	Data attribute

Index (Hex) : This is the index of the NX object that is expressed as a four-digit hexadecimal number.

Subindex (Hex) : This is the subindex of the NX object that is expressed as a two-digit hexadecimal number.

Object name : This is the name of the object. For a subindex, this is the name of the subindex.

Default value : This is the value that is set by default.

Data range : For a read-only (RO) NX object, this is the range of the data you can read. For a read-write (RW) NX object, this is the setting range of the data.

Unit : The unit is the physical units.

Data type : This is the data type of the object.

Access : This data tells if the object is read-only or read/write.

RO: Read only

RW: Read/write

I/O allocation : This tells whether I/O allocation is allowed.

Data attribute : This is the timing when changes to writable NX objects are enabled.

Y: Enabled by restarting

N: Enabled at all times

---: Write-prohibited

A-3-2 Unit Information Objects

This object gives the product information.

Index (hex)	Subindex (hex)	Object name	Default value	Data range	Unit	Data type	Access	I/O allocation	Data attribute
1000	---	NX Bus Identity	---	---	---	---	---	---	---
	00	Number of Entries	7	7	---	USINT	RO	Not possible	---
	02	Model	*1	---	---	ARRAY [0..11] OF BYTE	RO	Not possible	---
	03	Device Type	*2	---	---	UDINT	RO	Not possible	---
	05	Vendor Code	00000001 hex *3	---	---	UDINT	RO	Not possible	---
	06	Unit Version	*4	---	---	UDINT	RO	Not possible	---
	07	Serial Number	*5	00000000 to FFFFFFFF hex	---	UDINT	RO	Not possible	---
1001	---	Production Info	---	---	---	---	---	---	---
	00	Number of Entries	4	4	---	USINT	RO	Not possible	---
	01	Lot Number	*6	00000000 to FFFFFFFF hex	---	UDINT	RO	Not possible	---
	02	Hardware Version	*7	---	---	ARRAY [0..19] OF BYTE	RO	Not possible	---
	03	Software Version	*7	---	---	ARRAY [0..19] OF BYTE	RO	Not possible	---

*1. The Unit product models are assigned in ASCII code. If not all 12 bytes are used, the remainder elements are filled with spaces ($20).

*2. The product codes are assigned for each product models.
Bits 0 to 31: Product code

*3. OMRON vendor code

*4. Bits 24 to 31: Integer part of the Unit version.
Bits 16 to 23: Fractional part of the Unit version.
Bits 0 to 15: Reserved
(Example) For Ver.1.0, 0100□□□□ hex

*5. A unique serial number is assigned for each product Unit.
Bits 0 to 31: Serial number

*6. The year, month, and day of production are assigned to the "lot number".
Bits 24 to 31: Date of production
Bits 16 to 23: Month of production
Bits 8 to 15: Year of production
Bits 0 to 7: Reserved

*7. The version is returned in ASCII code. It is given as follows: "V" ($56), integer part of version, period ($2E), decimal part of version. If all 20 bytes are not required, the remaining bytes are filled with spaces ($20).
Example for version 1.00: $56$31$2E$30$30$20$20$20$20$20$20$20$20$20$20$20$20$20

A-3-3 Objects That Accept I/O Allocations

These objects accept I/O allocations.

If you assign any of the objects that are described below to I/O, you can no longer access those objects with the Read NX Unit Object instruction, Write NX Unit Object instruction, or other messages.

Note that if you are using a Temperature Control Unit with unit version 1.0, the index numbers 600F to 601D hex will have “Reserved” data. As they are for reserved data, explanation of these data is omitted.

Precautions for Correct Use

A Temperature Control Unit with unit version 1.0 contains reserved data. Do not access the reserved data. If a user program that accesses the reserved data is used in a Temperature Control Unit with unit version 1.1 or later, it may result in erroneous operation.

Index (hex)	Subindex (hex)	Object name	Default value	Data range	Unit	Data type	Access	I/O allocation	Data attribute
6000	---	Unit Status	---	---	---	---	---	---	---
	00	Number of entries	1	1	---	USINT	RO	Not possible.	---
	01	Unit Status*1	0000 hex	0000 to FFFF hex	---	WORD	RO	---	---

*1. Aggregated data for Unit status. Refer to *Unit Status* on page 6-16 for details about the Unit status.

Index (hex)	Subindex (hex)	Object name	Default value	Data range	Unit	Data type	Access	I/O allocation	Data attribute
6001	---	Channel Operating Status	---	---	---	---	---	---	---
	00	Number of entries	*1	*1	---	USINT	RO	Not possible	---
	01	Ch1 Operating Status*2	0000 hex	0000 to FFFF hex	---	WORD	RO	Possible	---
	02	Ch2 Operating Status*2	0000 hex	0000 to FFFF hex	---	WORD	RO	Possible	---
	03	Ch3 Operating Status*2 *3	0000 hex	0000 to FFFF hex	---	WORD	RO	Possible	---
	04	Ch4 Operating Status*2*3	0000 hex	0000 to FFFF hex	---	WORD	RO	Possible	---

*1. The default value and data range for Number of Entries are as follows.

NX Units	Default value	Data range
NX-TC2405/TC2406/TC2407/TC2408	2	2
NX-TC3405/TC3406/TC3407/TC3408	4	4

*2. Aggregated data for Ch□ Operating Status. Refer to *Unit Status* on page 6-16 for details about the Operating Status.

*3. Not in NX-TC2□□□.

Index (hex)	Subindex (hex)	Object name	Default value	Data range	Unit	Data type	Access	I/O allocation	Data attribute
6002	---	Channel Output and Alarm Status	---	---	---	---	---	---	---
	00	Number of entries	*1	*1	---	USINT	RO	Not possible	---
	01	Ch1 Output and Alarm Status*2	0000 hex	0000 to FFFF hex	---	WORD	RO	Possible	---
	02	Ch2 Output and Alarm Status*2	0000 hex	0000 to FFFF hex	---	WORD	RO	Possible	---
	03	Ch3 Output and Alarm Status*2 *3	0000 hex	0000 to FFFF hex	---	WORD	RO	Possible	---
	04	Ch4 Output and Alarm Status*2 *3	0000 hex	0000 to FFFF hex	---	WORD	RO	Possible	---

*1. The default value and data range for Number of Entries are as follows.

NX Units	Default value	Data range
NX-TC2405/TC2406/TC2407/TC2408	2	2
NX-TC3405/TC3406/TC3407/TC3408	4	4

*2. Aggregated data for Ch□ Output and Alarm Status. For details, refer to *Output and Alarm Status* on page 6-17.

*3. Not in NX-TC2□□□.

Index (hex)	Subindex (hex)	Object name	Default value	Data range	Unit	Data type	Access	I/O allocation	Data attribute
6003	---	Unit	---	---	---	---	---	---	---
	00	Number of entries	1	1	---	USINT	RO	Not possible	---
	01	Ambient temperature*1	0	-30 to 171	°C or °F	INT	RO	Possible	---

*1. Temperature around the terminals of the Temperature Control Unit. Refer to *7-3-7 Measuring the Ambient Temperature around Terminals* on page 7-24 for details about the ambient temperature.

Index (hex)	Subindex (hex)	Object name	Default value	Data range	Unit	Data type	Access	I/O allocation	Data attribute
6004	---	Decimal Point Position Monitor	---	---	---	---	---	---	---
	00	Number of entries	*1	*1	---	USINT	RO	Not possible	---
	01	Ch1 Decimal Point Position Monitor*2	0	0/1	---	UINT	RO	Possible	---
	02	Ch2 Decimal Point Position Monitor*2	0	0/1	---	UINT	RO	Possible	---
	03	Ch3 Decimal Point Position Monitor*2 *3	0	0/1	---	UINT	RO	Possible	---
	04	Ch4 Decimal Point Position Monitor*2 *3	0	0/1	---	UINT	RO	Possible	---

*1. The default value and data range for Number of Entries are as follows.

NX Units	Default value	Data range
NX-TC2405/TC2406/TC2407/TC2408	2	2
NX-TC3405/TC3406/TC3407/TC3408	4	4

*2. Decimal point position for Ch□. The value 0 means that no decimal point is used, and the value 1 indicates the data to the first decimal place is used. This is the decimal point position of measured values (INT) and set points (INT) for Ch□.

*3. Not in NX-TC2□□□.

Index (hex)	Subindex (hex)	Object name	Default value	Data range	Unit	Data type	Access	I/O allocation	Data attribute
6005	---	Measured Value INT	---	---	---	---	---	---	---
	00	Number of entries	*1	*1	---	USINT	RO	Not possible	---
	01	Ch1 Measured Value INT*2	0	-32400 to 32400*3	0.1°C or °C or 0.1°F or °F*4	INT	RO	Possible	---
	02	Ch2 Measured Value INT*2	0	-32400 to 32400*3	0.1°C or °C or 0.1°F or °F*4	INT	RO	Possible	---
	03	Ch3 Measured Value INT*2 *5	0	-32400 to 32400*3	0.1°C or °C or 0.1°F or °F*4	INT	RO	Possible	---
	04	Ch4 Measured Value INT*2 *5	0	-32400 to 32400*3	0.1°C or °C or 0.1°F or °F*4	INT	RO	Possible	---

*1. The default value and data range for Number of Entries are as follows.

NX Units	Default value	Data range
NX-TC2405/TC2406/TC2407/TC2408	2	2
NX-TC3405/TC3406/TC3407/TC3408	4	4

*2. INT-type measured value for Ch□ temperature sensor.

*3. When an error occurs, the maximum value in the input setting range that is determined by the selected input type is applied.

*4. Depending on the "Ch□ Temperature Unit" and "Ch□ Decimal Point Position" settings.

*5. Not in NX-TC2□□□.

Index (hex)	Subindex (hex)	Object name	Default value	Data range	Unit	Data type	Acce ss	I/O allo-cation	Data attribute
6006	---	Measured Value REAL	---	---	---	---	---	---	---
	00	Number of entries	*1	*1	---	USINT	RO	Not pos-sible	---
	01	Ch1 Measured Value REAL*2	0	-3240 to 3240*3	°C or °F*4	REAL	RO	Possible	---
	02	Ch2 Measured Value REAL*2	0	-3240 to 3240*3	°C or °F*4	REAL	RO	Possible	---
	03	Ch3 Measured Value REAL*2 *5	0	-3240 to 3240*3	°C or °F*4	REAL	RO	Possible	---
	04	Ch4 Measured Value REAL*2 *5	0	-3240 to 3240*3	°C or °F*4	REAL	RO	Possible	---

*1. The default value and data range for Number of Entries are as follows.

NX Units	Default value	Data range
NX-TC2405/TC2406/TC2407/TC2408	2	2
NX-TC3405/TC3406/TC3407/TC3408	4	4

*2. REAL-type measured value for Ch□ temperature sensor.

*3. When an error occurs, the maximum value in the input setting range that is determined by the selected input type is applied.

*4. Depending on the "Ch□ Temperature Unit" setting.

*5. Not in NX-TC2 □□□.

Index (hex)	Subindex (hex)	Object name	Default value	Data range	Unit	Data type	Acce ss	I/O allo-cation	Data attribute
6007	---	MV Monitor (Heating) INT	---	---	---	---	---	---	---
	00	Number of entries	*1	*1	---	USINT	RO	Not pos-sible	---
	01	Ch1 MV Monitor (Heating) INT*2	*3	*3	0.1%	INT	RO	Possible	---
	02	Ch2 MV Monitor (Heating) INT*2	*3	*3	0.1%	INT	RO	Possible	---
	03	Ch3 MV Monitor (Heating) INT*2 *4	*3	*3	0.1%	INT	RO	Possible	---
	04	Ch4 MV Monitor (Heating) INT*2 *4	*3	*3	0.1%	INT	RO	Possible	---

*1. The default value and data range for Number of Entries are as follows.

NX Units	Default value	Data range
NX-TC2405/TC2406/TC2407/TC2408	2	2
NX-TC3405/TC3406/TC3407/TC3408	4	4

*2. INT-type manipulated variable (heating) of control output for Ch□.

*3. The default value and data range for "Ch□ MV Monitor (Heating) INT" are as follows.

NX Units	Default value	Data range
NX-TC2405/TC2406/TC2408/TC3405/TC3406/TC3408	0	-50 to 1050
NX-TC2407/TC3407	0	0 to 1050

*4. Not in NX-TC2□□□.

Index (hex)	Subindex (hex)	Object name	Default value	Data range	Unit	Data type	Access	I/O allocation	Data attribute
6008	---	MV Monitor (Heating) REAL	---	---	---	---	---	---	---
	00	Number of entries	*1	*1	---	USINT	RO	Not possible	---
	01	Ch1 MV Monitor (Heating) REAL*2	*3	*3	%	REAL	RO	Possible	---
	02	Ch2 MV Monitor (Heating) REAL*2	*3	*3	%	REAL	RO	Possible	---
	03	Ch3 MV Monitor (Heating) REAL*2 *4	*3	*3	%	REAL	RO	Possible	---
	04	Ch4 MV Monitor (Heating) REAL*2 *4	*3	*3	%	REAL	RO	Possible	---

*1. The default value and data range for Number of Entries are as follows.

NX Units	Default value	Data range
NX-TC2405/TC2406/TC2407/TC2408	2	2
NX-TC3405/TC3406/TC3407/TC3408	4	4

*2. REAL-type manipulated variable (heating) of control output for Ch□.

*3. The default value and data range for "Ch□ MV Monitor (Heating) REAL" are as follows.

NX Units	Default value	Data range
NX-TC2405/TC2406/TC2408/TC3405/TC3406/TC3408	0	-50 to 1050
NX-TC2407/TC3407	0	0 to 1050

*4. Not in NX-TC2□□□.

Index (hex)	Subindex (hex)	Object name	Default value	Data range	Unit	Data type	Access	I/O allocation	Data attribute
6009	---	MV Monitor (Cooling) INT	---	---	---	---	---	---	---
	00	Number of entries	*1	*1	---	USINT	RO	Not possible	---
	01	Ch1 MV Monitor (Cooling) INT*2	0	0 to 1050	0.1%	INT	RO	Possible	---
	02	Ch2 MV Monitor (Cooling) INT*2	0	0 to 1050	0.1%	INT	RO	Possible	---
	03	Ch3 MV Monitor (Cooling) INT*2 *3	0	0 to 1050	0.1%	INT	RO	Possible	---
	04	Ch4 MV Monitor (Cooling) INT*2 *3	0	0 to 1050	0.1%	INT	RO	Possible	---

*1. The default value and data range for Number of Entries are as follows.

NX Units	Default value	Data range
NX-TC2407	2	2
NX-TC3407	4	4

*2. INT-type manipulated variable (cooling) of control output for Ch□. This is an object held by heating/cooling control type models only.

*3. Not in NX-TC2□□□.

Index (hex)	Subindex (hex)	Object name	Default value	Data range	Unit	Data type	Access	I/O allocation	Data attribute
600A	---	MV Monitor (Cooling) REAL	---	---	---	---	---	---	---
	00	Number of entries	*1	*1	---	USINT	RO	Not possible	---
	01	Ch1 MV Monitor (Cooling) REAL*2	0	0 to 105	%	REAL	RO	Possible	---
	02	Ch2 MV Monitor (Cooling) REAL*2	0	0 to 105	%	REAL	RO	Possible	---
	03	Ch3 MV Monitor (Cooling) REAL*2 *3	0	0 to 105	%	REAL	RO	Possible	---
	04	Ch4 MV Monitor (Cooling) REAL*2 *3	0	0 to 105	%	REAL	RO	Possible	---

*1. The default value and data range for Number of Entries are as follows.

NX Units	Default value	Data range
NX-TC2407	2	2
NX-TC3407	4	4

*2. REAL-type manipulated variable (cooling) of control output for Ch□. This is an object held by heating/cooling control type models only.

*3. Not in NX-TC2□□□.

Index (hex)	Subindex (hex)	Object name	Default value	Data range	Unit	Data type	Access	I/O allocation	Data attribute
600B	---	Heater Current UINT	---	---	---	---	---	---	---
	00	Number of entries	*1	*1	---	USINT	RO	Not possible	---
	01	Ch1 Heater Current UINT*2	0	0 to 550	0.1 A	UINT	RO	Possible	---
	02	Ch2 Heater Current UINT*2	0	0 to 550	0.1 A	UINT	RO	Possible	---
	03	Ch3 Heater Current UINT*2 *3	0	0 to 550	0.1 A	UINT	RO	Possible	---
	04	Ch4 Heater Current UINT*2 *3	0	0 to 550	0.1 A	UINT	RO	Possible	---

*1. The default value and data range for Number of Entries are as follows.

NX Units	Default value	Data range
NX-TC2405	2	2
NX-TC3405	4	4

*2. The UINT-type heater current for Ch□.The current value flowing in the CT when the control output is ON. This is an object held by models with CT input only. Refer to *7-7-2 Heater Burnout Detection* on page 7-98 for details of the current values when the ON time of the control output is less than the specified time or when the heater current exceeds the measurement range.

*3. Not in NX-TC2 □□□.

Index (hex)	Subindex (hex)	Object name	Default value	Data range	Unit	Data type	Access	I/O allocation	Data attribute
600C	---	Heater Current REAL	---	---	---	---	---	---	---
	00	Number of entries	*1	*1	---	USINT	RO	Not possible	---
	01	Ch1 Heater Current REAL*2	0	0 to 55	A	REAL	RO	Possible	---
	02	Ch2 Heater Current REAL*2	0	0 to 55	A	REAL	RO	Possible	---
	03	Ch3 Heater Current REAL*2 *3	0	0 to 55	A	REAL	RO	Possible	---
	04	Ch4 Heater Current REAL*2 *3	0	0 to 55	A	REAL	RO	Possible	---

*1. The default value and data range for Number of Entries are as follows.

NX Units	Default value	Data range
NX-TC2405	2	2
NX-TC3405	4	4

*2. The REAL-type heater current for Ch□. The current value flowing in the CT when the control output is ON. This is an object held by models with CT input only. Refer to *7-7-2 Heater Burnout Detection* on page 7-98 for details of the current values when the ON time of the control output is less than the specified time or when the heater current exceeds the measurement range.

*3. Not in NX-TC2 □□□.

Index (hex)	Subindex (hex)	Object name	Default value	Data range	Unit	Data type	Access	I/O allocation	Data attribute
600D	---	Leakage Current UINT	---	---	---	---	---	---	---
	00	Number of entries	*1	*1	---	USINT	RO	Not possible	---
	01	Ch1 Leakage Current UINT*2	0	0 to 550	0.1 A	UINT	RO	Possible	---
	02	Ch2 Leakage Current UINT*2	0	0 to 550	0.1 A	UINT	RO	Possible	---
	03	Ch3 Leakage Current UINT*2 *3	0	0 to 550	0.1 A	UINT	RO	Possible	---
	04	Ch4 Leakage Current UINT*2 *3	0	0 to 550	0.1 A	UINT	RO	Possible	---

*1. The default value and data range for Number of Entries are as follows.

NX Units	Default value	Data range
NX-TC2405	2	2
NX-TC3405	4	4

*2. The UINT-type leakage current for Ch□. The current value flowing in the CT when the control output is OFF. This is an object held by models with CT input only. Refer to *7-7-3 SSR Failure Detection* on page 7-101 for details of the current values when the OFF time of the control output is less than the specified time or when the leakage current exceeds the measurement range.

*3. Not in NX-TC2 □□□.

Index (hex)	Subindex (hex)	Object name	Default value	Data range	Unit	Data type	Access	I/O allocation	Data attribute
600E	---	Leakage Current REAL	---	---	---	---	---	---	---
	00	Number of entries	*1	*1	---	USINT	RO	Not possible	---
	01	Ch1 Leakage Current REAL*2	0	0 to 55	A	REAL	RO	Possible	---
	02	Ch2 Leakage Current REAL*2	0	0 to 55	A	REAL	RO	Possible	---
	03	Ch3 Leakage Current REAL*2 *3	0	0 to 55	A	REAL	RO	Possible	---
	04	Ch4 Leakage Current REAL*2 *3	0	0 to 55	A	REAL	RO	Possible	---

*1. The default value and data range for Number of Entries are as follows.

NX Units	Default value	Data range
NX-TC2405	2	2
NX-TC3405	4	4

*2. The REAL-type leakage current for Ch□. The current value flowing in the CT when the control output is OFF. This is an object held by models with CT input only. Refer to *7-7-3 SSR Failure Detection* on page 7-101 for details of the current values when the OFF time of the control output is less than the specified time or when the leakage current exceeds the measurement range.

*3. Not in NX-TC2 □□□.

Index (hex)	Subindex (hex)	Object name	Default value	Data range	Unit	Data type	Access	I/O allocation	Data attribute
600F	---	Proportional Band Monitor	---	---	---	---	---	---	---
	00	Number of entries	*1	*1	---	USINT	RO	Not possible	---
	01	Ch1 Proportional Band Monitor*2	80	1 to 9999	0.1°C or 0.1°F*3	UINT	RO	Possible	---
	02	Ch2 Proportional Band Monitor*2	80	1 to 9999	0.1°C or 0.1°F*3	UINT	RO	Possible	---
	03	Ch3 Proportional Band Monitor*2 *4	80	1 to 9999	0.1°C or 0.1°F*3	UINT	RO	Possible	---
	04	Ch4 Proportional Band Monitor*2 *4	80	1 to 9999	0.1°C or 0.1°F*3	UINT	RO	Possible	---

*1. The default value and data range for Number of Entries are as follows.

NX Units	Default value	Data range
NX-TC2405/TC2406/TC2407/TC2408	2	2
NX-TC3405/TC3406/TC3407/TC3408	4	4

*2. Proportional band for Ch□.

*3. Follows the “Ch□ Temperature Unit” setting.

*4. Not in NX-TC2□□□.

Index (hex)	Subindex (hex)	Object name	Default value	Data range	Unit	Data type	Access	I/O allocation	Data attribute
6010	---	Integral Time Monitor	---	---	---	---	---	---	---
	00	Number of entries	*1	*1	---	USINT	RO	Not possible	---
	01	Ch1 Integral Time Monitor*2	2330	0 to 39999	0.1 s	UINT	RO	Possible	---
	02	Ch2 Integral Time Monitor*2	2330	0 to 39999	0.1 s	UINT	RO	Possible	---
	03	Ch3 Integral Time Monitor*2 *3	2330	0 to 39999	0.1 s	UINT	RO	Possible	---
	04	Ch4 Integral Time Monitor*2 *3	2330	0 to 39999	0.1 s	UINT	RO	Possible	---

*1. The default value and data range for Number of Entries are as follows.

NX Units	Default value	Data range
NX-TC2405/TC2406/TC2407/TC2408	2	2
NX-TC3405/TC3406/TC3407/TC3408	4	4

*2. Integral time for Ch□.

*3. Not in NX-TC2□□□.

Index (hex)	Subindex (hex)	Object name	Default value	Data range	Unit	Data type	Access	I/O allocation	Data attribute
6011	---	Derivative Time Monitor	---	---	---	---	---	---	---
	00	Number of entries	*1	*1	---	USINT	RO	Not possible	---
	01	Ch1 Derivative Time Monitor*2	400	0 to 39999	0.1 s	UINT	RO	Possible	---
	02	Ch2 Derivative Time Monitor*2	400	0 to 39999	0.1 s	UINT	RO	Possible	---
	03	Ch3 Derivative Time Monitor*2 *3	400	0 to 39999	0.1 s	UINT	RO	Possible	---
	04	Ch4 Derivative Time Monitor*2 *3	400	0 to 39999	0.1 s	UINT	RO	Possible	---

*1. The default value and data range for Number of Entries are as follows.

NX Units	Default value	Data range
NX-TC2405/TC2406/TC2407/TC2408	2	2
NX-TC3405/TC3406/TC3407/TC3408	4	4

*2. Derivative time for Ch□.

*3. Not in NX-TC2□□□.

Index (hex)	Subindex (hex)	Object name	Default value	Data range	Unit	Data type	Acce ss	I/O allo-cation	Data attribute
6012	---	Proportional Band (Cooling) Monitor	---	---	---	---	---	---	---
	00	Number of entries	*1	*1	---	USINT	RO	Not pos-sible	---
	01	Ch1 Proportional Band (Cooling) Moni-tor*2	80	1 to 9999	0.1°C or 0.1°F*3	UINT	RO	Possible	---
	02	Ch2 Proportional Band (Cooling) Moni-tor*2	80	1 to 9999	0.1°C or 0.1°F*3	UINT	RO	Possible	---
	03	Ch3 Proportional Band (Cooling) Moni-tor*2 *4	80	1 to 9999	0.1°C or 0.1°F*3	UINT	RO	Possible	---
	04	Ch4 Proportional Band (Cooling) Moni-tor*2 *4	80	1 to 9999	0.1°C or 0.1°F*3	UINT	RO	Possible	---

*1. The default value and data range for Number of Entries are as follows.

NX Units	Default value	Data range
NX-TC2407	2	2
NX-TC3407	4	4

*2. Proportional band (cooling) for Ch□. This is an object held by heating/cooling control type models only.

*3. Follows the “Ch□ Temperature Unit” setting.

*4. Not in NX-TC2□□□.

Index (hex)	Subindex (hex)	Object name	Default value	Data range	Unit	Data type	Acce ss	I/O allo-cation	Data attribute
6013	---	Integral Time (Cool-ing) Monitor	---	---	---	---	---	---	---
	00	Number of entries	*1	*1	---	USINT	RO	Not pos-sible	---
	01	Ch1 Integral Time (Cooling) Monitor*2	2330	0 to 39999	0.1 s	UINT	RO	Possible	---
	02	Ch2 Integral Time (Cooling) Monitor*2	2330	0 to 39999	0.1 s	UINT	RO	Possible	---
	03	Ch3 Integral Time (Cooling) Monitor*2 *3	2330	0 to 39999	0.1 s	UINT	RO	Possible	---
	04	Ch4 Integral Time (Cooling) Monitor*2 *3	2330	0 to 39999	0.1 s	UINT	RO	Possible	---

*1. The default value and data range for Number of Entries are as follows.

NX Units	Default value	Data range
NX-TC2407	2	2
NX-TC3407	4	4

*2. Integral time (cooling) for Ch□. This is an object held by heating/cooling control type models only.

*3. Not in NX-TC2□□□.

Index (hex)	Subindex (hex)	Object name	Default value	Data range	Unit	Data type	Access	I/O allocation	Data attribute
6014	---	Derivative Time (Cooling) Monitor	---	---	---	---	---	---	---
	00	Number of entries	*1	*1	---	USINT	RO	Not possible	---
	01	Ch1 Derivative Time (Cooling) Monitor*2	400	0 to 39999	0.1 s	UINT	RO	Possible	---
	02	Ch2 Derivative Time (Cooling) Monitor*2	400	0 to 39999	0.1 s	UINT	RO	Possible	---
	03	Ch3 Derivative Time (Cooling) Monitor*2 *3	400	0 to 39999	0.1 s	UINT	RO	Possible	---
	04	Ch4 Derivative Time (Cooling) Monitor*2 *3	400	0 to 39999	0.1 s	UINT	RO	Possible	---

*1. The default value and data range for Number of Entries are as follows.

NX Units	Default value	Data range
NX-TC2407	2	2
NX-TC3407	4	4

*2. Derivative time (cooling) for Ch□. This is an object held by heating/cooling control type models only.

*3. Not in NX-TC2□□□.

Index (hex)	Subindex (hex)	Object name	Default value	Data range	Unit	Data type	Access	I/O allocation	Data attribute
6015	---	SP Response Proportional Band Monitor	---	---	---	---	---	---	---
	00	Number of entries	*1	*1	---	USINT	RO	Not possible	---
	01	Ch1 SP Response Proportional Band Monitor*2	80	1 to 9999	0.1°C or 0.1°F*3	UINT	RO	Possible	---
	02	Ch2 SP Response Proportional Band Monitor*2	80	1 to 9999	0.1°C or 0.1°F*3	UINT	RO	Possible	---
	03	Ch3 SP Response Proportional Band Monitor*2 *4	80	1 to 9999	0.1°C or 0.1°F*3	UINT	RO	Possible	---
	04	Ch4 SP Response Proportional Band Monitor*2 *4	80	1 to 9999	0.1°C or 0.1°F*3	UINT	RO	Possible	---

*1. The default value and data range for Number of Entries are as follows.

NX Units	Default value	Data range
NX-TC2405/TC2406/TC2408	2	2
NX-TC3405/TC3406/TC3408	4	4

*2. SP response proportional band for Ch□. This is an object held by standard control type models only.

*3. Follows the “Ch□ Temperature Unit” setting.

*4. Not in NX-TC2□□□.

Index (hex)	Subindex (hex)	Object name	Default value	Data range	Unit	Data type	Access	I/O allocation	Data attribute
6016	---	SP Response Integral Time Monitor	---	---	---	---	---	---	---
	00	Number of entries	*1	*1	---	USINT	RO	Not possible	---
	01	Ch1 SP Response Integral Time Monitor*2	2330	0 to 39999	0.1 s	UINT	RO	Possible	---
	02	Ch2 SP Response Integral Time Monitor*2	2330	0 to 39999	0.1 s	UINT	RO	Possible	---
	03	Ch3 SP Response Integral Time Monitor*2 *3	2330	0 to 39999	0.1 s	UINT	RO	Possible	---
	04	Ch4 SP Response Integral Time Monitor*2 *3	2330	0 to 39999	0.1 s	UINT	RO	Possible	---

*1. The default value and data range for Number of Entries are as follows.

NX Units	Default value	Data range
NX-TC2405/TC2406/TC2408	2	2
NX-TC3405/TC3406/TC3408	4	4

*2. SP response integral time for Ch□. This is an object held by standard control type models only.

*3. Not in NX-TC2□□□.

Index (hex)	Subindex (hex)	Object name	Default value	Data range	Unit	Data type	Access	I/O allocation	Data attribute
6017	---	SP Response Derivative Time Monitor	---	---	---	---	---	---	---
	00	Number of entries	*1	*1	---	USINT	RO	Not possible	---
	01	Ch1 SP Response Derivative Time Monitor*2	400	0 to 39999	0.1 s	UINT	RO	Possible	---
	02	Ch2 SP Response Derivative Time Monitor*2	400	0 to 39999	0.1 s	UINT	RO	Possible	---
	03	Ch3 SP Response Derivative Time Monitor*2 *3	400	0 to 39999	0.1 s	UINT	RO	Possible	---
	04	Ch4 SP Response Derivative Time Monitor*2 *3	400	0 to 39999	0.1 s	UINT	RO	Possible	---

*1. The default value and data range for Number of Entries are as follows.

NX Units	Default value	Data range
NX-TC2405/TC2406/TC2408	2	2
NX-TC3405/TC3406/TC3408	4	4

*2. SP response derivative time for Ch□. This is an object held by standard control type models only.

*3. Not in NX-TC2□□□.

Index (hex)	Subindex (hex)	Object name	Default value	Data range	Unit	Data type	Access	I/O allocation	Data attribute
6018	---	SP Response Coefficient Number Monitor	---	---	---	---	---	---	---
	00	Number of entries	*1	*1	---	USINT	RO	Not possible	---
	01	Ch1 SP Response Coefficient Number Monitor*2	0	0 to 9999	---	UINT	RO	Possible	---
	02	Ch2 SP Response Coefficient Number Monitor*2	0	0 to 9999	---	UINT	RO	Possible	---
	03	Ch3 SP Response Coefficient Number Monitor*2 *3	0	0 to 9999	---	UINT	RO	Possible	---
	04	Ch4 SP Response Coefficient Number Monitor*2 *3	0	0 to 9999	---	UINT	RO	Possible	---

*1. The default value and data range for Number of Entries are as follows.

NX Units	Default value	Data range
NX-TC2405/TC2406/TC2408	2	2
NX-TC3405/TC3406/TC3408	4	4

*2. SP response coefficient number for Ch□. This is an object held by standard control type models only.

*3. Not in NX-TC2□□□.

Index (hex)	Subindex (hex)	Object name	Default value	Data range	Unit	Data type	Access	I/O allocation	Data attribute
6019	---	Disturbance Proportional Band Monitor	---	---	---	---	---	---	---
	00	Number of entries	*1	*1	---	USINT	RO	Not possible	---
	01	Ch1 Disturbance Proportional Band Monitor*2	80	1 to 9999	0.1°C or 0.1°F*3	UINT	RO	Possible	---
	02	Ch2 Disturbance Proportional Band Monitor*2	80	1 to 9999	0.1°C or 0.1°F*3	UINT	RO	Possible	---
	03	Ch3 Disturbance Proportional Band Monitor*2 *4	80	1 to 9999	0.1°C or 0.1°F*3	UINT	RO	Possible	---
	04	Ch4 Disturbance Proportional Band Monitor*2 *4	80	1 to 9999	0.1°C or 0.1°F*3	UINT	RO	Possible	---

*1. The default value and data range for Number of Entries are as follows.

NX Units	Default value	Data range
NX-TC2405/TC2406/TC2408	2	2
NX-TC3405/TC3406/TC3408	4	4

*2. Disturbance proportional band for Ch□. This is an object held by standard control type models only.

*3. Follows the “Ch□ Temperature Unit” setting.

*4. Not in NX-TC2□□□.

Index (hex)	Subindex (hex)	Object name	Default value	Data range	Unit	Data type	Acce ss	I/O allo-cation	Data attribute
601A	---	Disturbance Integral Time Monitor	---	---	---	---	---	---	---
	00	Number of entries	*1	*1	---	USINT	RO	Not possible	---
	01	Ch1 Disturbance Integral Time Monitor*2	2330	0 to 39999	0.1 s	UINT	RO	Possible	---
	02	Ch2 Disturbance Integral Time Monitor*2	2330	0 to 39999	0.1 s	UINT	RO	Possible	---
	03	Ch3 Disturbance Integral Time Monitor*2 *3	2330	0 to 39999	0.1 s	UINT	RO	Possible	---
	04	Ch4 Disturbance Integral Time Monitor*2 *3	2330	0 to 39999	0.1 s	UINT	RO	Possible	---

*1. The default value and data range for Number of Entries are as follows.

NX Units	Default value	Data range
NX-TC2405/TC2406/TC2408	2	2
NX-TC3405/TC3406/TC3408	4	4

*2. Disturbance integral time for Ch□. This is an object held by standard control type models only.

*3. Not in NX-TC2□□□.

Index (hex)	Subindex (hex)	Object name	Default value	Data range	Unit	Data type	Acce ss	I/O allo-cation	Data attribute
601B	---	Disturbance Derivative Time Monitor	---	---	---	---	---	---	---
	00	Number of entries	*1	*1	---	USINT	RO	Not possible	---
	01	Ch1 Disturbance Derivative Time Monitor*2	400	0 to 39999	0.1 s	UINT	RO	Possible	---
	02	Ch2 Disturbance Derivative Time Monitor*2	400	0 to 39999	0.1 s	UINT	RO	Possible	---
	03	Ch3 Disturbance Derivative Time Monitor*2 *3	400	0 to 39999	0.1 s	UINT	RO	Possible	---
	04	Ch4 Disturbance Derivative Time Monitor*2 *3	400	0 to 39999	0.1 s	UINT	RO	Possible	---

*1. The default value and data range for Number of Entries are as follows.

NX Units	Default value	Data range
NX-TC2405/TC2406/TC2408	2	2
NX-TC3405/TC3406/TC3408	4	4

*2. Disturbance derivative time for Ch□. This is an object held by standard control type models only.

*3. Not in NX-TC2□□□.

Index (hex)	Subindex (hex)	Object name	Default value	Data range	Unit	Data type	Access	I/O allocation	Data attribute
601C	---	Input Digital Filter Monitor	---	---	---	---	---	---	---
	00	Number of entries	*1	*1	---	USINT	RO	Not possible	---
	01	Ch1 Input Digital Filter Monitor*2	0	0 to 9999	0.1 s	UINT	RO	Possible	---
	02	Ch2 Input Digital Filter Monitor*2	0	0 to 9999	0.1 s	UINT	RO	Possible	---
	03	Ch3 Input Digital Filter Monitor*2 *3	0	0 to 9999	0.1 s	UINT	RO	Possible	---
	04	Ch4 Input Digital Filter Monitor*2 *3	0	0 to 9999	0.1 s	UINT	RO	Possible	---

*1. The default value and data range for Number of Entries are as follows.

NX Units	Default value	Data range
NX-TC2405/TC2406/TC2409/TC2408	2	2
NX-TC3405/TC3406/TC3409/TC3408	4	4

*2. Input digital filter for Ch□.

*3. Not in NX-TC2□□□.

Index (hex)	Subindex (hex)	Object name	Default value	Data range	Unit	Data type	Access	I/O allocation	Data attribute
601D	---	Response flag	---	---	---	---	---	---	---
	00	Number of entries	1	1	---	USINT	RO	Not possible	---
	01	Response flag*1	0	0000 to FFFF hex	---	WORD	RO	Possible	---

*1. The reflection result when the “Reflect Data for Adjustment” of “Ch□ Operation Command” is executed. For details on the response flag, refer to *6-1-4 Method of Accessing the I/O Data for Adjustment* on page 6-31.

Index (hex)	Subindex (hex)	Object name	Default value	Data range	Unit	Data type	Acce ss	I/O allo-cation	Data attribute
7000	---	Channel Operation Command	---	---	---	---	---	---	---
	00	Number of entries	*1	*1	---	USINT	RO	Not pos-sible	---
	01	Ch1 Operation Command*2	0000 hex	0000 to FFFF hex	---	WORD	RW	Possible	N
	02	Ch2 Operation Command*2	0000 hex	0000 to FFFF hex	---	WORD	RW	Possible	N
	03	Ch3 Operation Command*2 *3	0000 hex	0000 to FFFF hex	---	WORD	RW	Possible	N
	04	Ch4 Operation Command*2 *3	0000 hex	0000 to FFFF hex	---	WORD	RW	Possible	N

*1. The default value and data range for Number of Entries are as follows.

NX Units	Default value	Data range
NX-TC2405/TC2406/TC2407/TC2408	2	2
NX-TC3405/TC3406/TC3407/TC3408	4	4

*2. Aggregated data for Ch□ operation commands. For details, refer to *Operation Command* on page 6-18.

*3. Not in NX-TC2 □□□.

Index (hex)	Subindex (hex)	Object name	Default value	Data range	Unit	Data type	Acce ss	I/O allo-cation	Data attribute
7001	---	Channel Set Point INT	---	---	---	---	---	---	---
	00	Number of entries	*1	*1	---	USINT	RO	Not pos-sible	---
	01	Ch1 Set Point INT*2	0	-32000 to 32000*3	0.1°C or °C or 0.1°F or °F*4	INT	RW	Possible	N
	02	Ch2 Set Point INT*2	0	-32000 to 32000*3	0.1°C or °C or 0.1°F or °F*4	INT	RW	Possible	N
	03	Ch3 Set Point INT*2 *5	0	-32000 to 32000*3	0.1°C or °C or 0.1°F or °F*4	INT	RW	Possible	N
	04	Ch4 Set Point INT*2 *5	0	-32000 to 32000*3	0.1°C or °C or 0.1°F or °F*4	INT	RW	Possible	N

*1. The default value and data range for Number of Entries are as follows.

NX Units	Default value	Data range
NX-TC2405/TC2406/TC2407/TC2408	2	2
NX-TC3405/TC3406/TC3407/TC3408	4	4

*2. The INT-type set point for Ch□.

*3. If you set a value that exceeds the input setting range determined by the input type, the upper limit or the lower limit of the input setting range is applied as the set point.

*4. Depending on the "Ch□ Temperature Unit" and "Ch□ Decimal Point Position" settings.

*5. Not in NX-TC2 □□□.

Index (hex)	Subindex (hex)	Object name	Default value	Data range	Unit	Data type	Access	I/O allocation	Data attribute
7002	---	Channel Set Point REAL	---	---	---	---	---	---	---
	00	Number of entries	*1	*1	---	USINT	RO	Not possible	---
	01	Ch1 Set Point REAL*2	0	-3200 to 3200*3	°C or °F*4	REAL	RW	Possible	N
	02	Ch2 Set Point REAL*2	0	-3200 to 3200*3	°C or °F*4	REAL	RW	Possible	N
	03	Ch3 Set Point REAL*2 *5	0	-3200 to 3200*3	°C or °F*4	REAL	RW	Possible	N
	04	Ch4 Set Point REAL*2 *5	0	-3200 to 3200*3	°C or °F*4	REAL	RW	Possible	N

*1. The default value and data range for Number of Entries are as follows.

NX Units	Default value	Data range
NX-TC2405/TC2406/TC2407/TC2408	2	2
NX-TC3405/TC3406/TC3407/TC3408	4	4

*2. The INT-type set point for Ch□.

*3. If you set a value that exceeds the input setting range determined by the input type, the upper limit or the lower limit of the input setting range is applied as the set point.

*4. Depending on the "Ch□ Temperature Unit" and "Ch□ Decimal Point Position" settings.

*5. Not in NX-TC2 □□□.

Index (hex)	Subindex (hex)	Object name	Default value	Data range	Unit	Data type	Access	I/O allocation	Data attribute
7003	---	Channel Manual MV INT	---	---	---	---	---	---	---
	00	Number of entries	*1	*1	---	USINT	RO	Not possible	---
	01	Ch1 Manual MV INT*2	*3	*3	0.1%	INT	RW	Possible	N
	02	Ch2 Manual MV INT*2	*3	*3	0.1%	INT	RW	Possible	N
	03	Ch3 Manual MV INT*2 *4	*3	*3	0.1%	INT	RW	Possible	N
	04	Ch4 Manual MV INT*2 *4	*3	*3	0.1%	INT	RW	Possible	N

*1. The default value and data range for Number of Entries are as follows.

NX Units	Default value	Data range
NX-TC2405/TC2406/TC2407/TC2408	2	2
NX-TC3405/TC3406/TC3407/TC3408	4	4

*2. INT-type manual manipulated variable of control output for Ch□. For details, refer to *7-4-6 Manual MV* on page 7-40.

*3. The default value and data range for "Ch□ Manual MV INT" are as follows. If you set a negative value on the heating and cooling control type on the Unit, it will be a cooling output.

NX Units	Default value	Data range
NX-TC2405/TC2406/TC2408/TC3405/TC3406/TC3408	0	-50 to 1050
NX-TC2407/TC3407	0	-1050 to 1050

*4. Not in NX-TC2 □□□.

Index (hex)	Subindex (hex)	Object name	Default value	Data range	Unit	Data type	Access	I/O allocation	Data attribute
7004	---	Channel Manual MV REAL	---	---	---	---	---	---	---
	00	Number of entries	*1	*1	---	USINT	RO	Not possible	---
	01	Ch1 Manual MV REAL*2	*3	*3	%	REAL	RW	Possible	N
	02	Ch2 Manual MV INT*2	*3	*3	%	REAL	RW	Possible	N
	03	Ch3 Manual MV INT*2 *4	*3	*3	%	REAL	RW	Possible	N
	04	Ch4 Manual MV INT*2 *4	*3	*3	%	REAL	RW	Possible	N

*1. The default value and data range for Number of Entries are as follows.

NX Units	Default value	Data range
NX-TC2405/TC2406/TC2407/TC2408	2	2
NX-TC3405/TC3406/TC3407/TC3408	4	4

*2. REAL-type manual manipulated variable of control output for Ch □.For details, refer to *7-4-6 Manual MV* on page 7-40.

*3. The default value and data range for "Ch□ Manual MV REAL" are as follows. If you set a negative value on the heating and cooling control type on the Unit, it will be a cooling output.

NX Units	Default value	Data range
NX-TC2405/TC2406/TC2408/TC3405/TC3406/TC3408	0	-5 to 105
NX-TC2407/TC3407	0	-105 to 105

*4. Not in NX-TC2 □□□.

Index (hex)	Subindex (hex)	Object name	Default value	Data range	Unit	Data type	Access	I/O allocation	Data attribute
7005	---	Proportional Band	---	---	---	---	---	---	---
	00	Number of entries	*1	*1	---	USINT	RO	Not possible	---
	01	Ch1 Proportional Band*2	80	1 to 9999	0.1°C or 0.1°F*3	UINT	RW	Possible	N
	02	Ch2 Proportional Band*2	80	1 to 9999	0.1°C or 0.1°F*3	UINT	RW	Possible	N
	03	Ch3 Proportional Band*2 *4	80	1 to 9999	0.1°C or 0.1°F*3	UINT	RW	Possible	N
	04	Ch4 Proportional Band*2 *4	80	1 to 9999	0.1°C or 0.1°F*3	UINT	RW	Possible	N

*1. The default value and data range for Number of Entries are as follows.

NX Units	Default value	Data range
NX-TC2405/TC2406/TC2407/TC2408	2	2
NX-TC3405/TC3406/TC3407/TC3408	4	4

*2. Proportional band for Ch□.

*3. Follows the “Ch□ Temperature Unit” setting.

*4. Not in NX-TC2□□□.

Index (hex)	Subindex (hex)	Object name	Default value	Data range	Unit	Data type	Access	I/O allocation	Data attribute
7006	---	Integral Time	---	---	---	---	---	---	---
	00	Number of entries	*1	*1	---	USINT	RO	Not possible	---
	01	Ch1 Integral Time*2	2330	0 to 39999	0.1 s	UINT	RW	Possible	N
	02	Ch2 Integral Time*2	2330	0 to 39999	0.1 s	UINT	RW	Possible	N
	03	Ch3 Integral Time*2 *3	2330	0 to 39999	0.1 s	UINT	RW	Possible	N
	04	Ch4 Integral Time*2 *3	2330	0 to 39999	0.1 s	UINT	RW	Possible	N

*1. The default value and data range for Number of Entries are as follows.

NX Units	Default value	Data range
NX-TC2405/TC2406/TC2407/TC2408	2	2
NX-TC3405/TC3406/TC3407/TC3408	4	4

*2. Integral time for Ch□.

*3. Not in NX-TC2□□□.

Index (hex)	Subindex (hex)	Object name	Default value	Data range	Unit	Data type	Access	I/O allocation	Data attribute
7007	---	Derivative Time	---	---	---	---	---	---	---
	00	Number of entries	*1	*1	---	USINT	RO	Not possible	---
	01	Ch1 Derivative Time*2	400	0 to 39999	0.1 s	UINT	RW	Possible	N
	02	Ch2 Derivative Time*2	400	0 to 39999	0.1 s	UINT	RW	Possible	N
	03	Ch3 Derivative Time*2 *3	400	0 to 39999	0.1 s	UINT	RW	Possible	N
	04	Ch4 Derivative Time*2 *3	400	0 to 39999	0.1 s	UINT	RW	Possible	N

*1. The default value and data range for Number of Entries are as follows.

NX Units	Default value	Data range
NX-TC2405/TC2406/TC2407/TC2408	2	2
NX-TC3405/TC3406/TC3407/TC3408	4	4

*2. Derivative time for Ch□.

*3. Not in NX-TC2□□□.

Index (hex)	Subindex (hex)	Object name	Default value	Data range	Unit	Data type	Acce ss	I/O allo-cation	Data attribute
7008	---	Proportional Band Cooling	---	---	---	---	---	---	---
	00	Number of entries	*1	*1	---	USINT	RO	Not pos-sible	---
	01	Ch1 Proportional Band Cooling*2	80	1 to 9999	0.1°C or 0.1°F*3	UINT	RW	Possible	N
	02	Ch2 Proportional Band Cooling*2	80	1 to 9999	0.1°C or 0.1°F*3	UINT	RW	Possible	N
	03	Ch3 Proportional Band Cooling*2 *4	80	1 to 9999	0.1°C or 0.1°F*3	UINT	RW	Possible	N
	04	Ch4 Proportional Band Cooling*2 *4	80	1 to 9999	0.1°C or 0.1°F*3	UINT	RW	Possible	N

*1. The default value and data range for Number of Entries are as follows.

NX Units	Default value	Data range
NX-TC2407	2	2
NX-TC3407	4	4

*2. Proportional band for Ch□. This is an object held by heating/cooling control type models only.

*3. Follows the “Ch□ Temperature Unit” setting.

*4. Not in NX-TC2□□□.

Index (hex)	Subindex (hex)	Object name	Default value	Data range	Unit	Data type	Acce ss	I/O allo-cation	Data attribute
7009	---	Integral Time Cool-ing	---	---	---	---	---	---	---
	00	Number of entries	*1	*1	---	USINT	RO	Not pos-sible	---
	01	Ch1 Integral Time Cooling*2	2330	0 to 39999	0.1 s	UINT	RW	Possible	N
	02	Ch2 Integral Time Cooling*2	2330	0 to 39999	0.1 s	UINT	RW	Possible	N
	03	Ch3 Integral Time Cooling*2 *3	2330	0 to 39999	0.1 s	UINT	RW	Possible	N
	04	Ch4 Integral Time Cooling*2 *3	2330	0 to 39999	0.1 s	UINT	RW	Possible	N

*1. The default value and data range for Number of Entries are as follows.

NX Units	Default value	Data range
NX-TC2407	2	2
NX-TC3407	4	4

*2. Integral time (cooling) for Ch□. This is an object held by heating/cooling control type models only.

*3. Not in NX-TC2□□□.

Index (hex)	Subindex (hex)	Object name	Default value	Data range	Unit	Data type	Access	I/O allocation	Data attribute
700A	---	Derivative Time Cooling	---	---	---	---	---	---	---
	00	Number of entries	*1	*1	---	USINT	RO	Not possible	---
	01	Ch1 Derivative Time Cooling*2	400	0 to 39999	0.1 s	UINT	RW	Possible	N
	02	Ch2 Derivative Time Cooling*2	400	0 to 39999	0.1 s	UINT	RW	Possible	N
	03	Ch3 Derivative Time Cooling*2 *3	400	0 to 39999	0.1 s	UINT	RW	Possible	N
	04	Ch4 Derivative Time Cooling*2 *3	400	0 to 39999	0.1 s	UINT	RW	Possible	N

*1. The default value and data range for Number of Entries are as follows.

NX Units	Default value	Data range
NX-TC2407	2	2
NX-TC3407	4	4

*2. Derivative time (cooling) for Ch□. This is an object held by heating/cooling control type models only.

*3. Not in NX-TC2□□□.

Index (hex)	Subindex (hex)	Object name	Default value	Data range	Unit	Data type	Access	I/O allocation	Data attribute
700B	---	SP Response Proportional Band	---	---	---	---	---	---	---
	00	Number of entries	*1	*1	---	USINT	RO	Not possible	---
	01	Ch1 SP Response Proportional Band*2	80	1 to 9999	0.1°C or 0.1°F*3	UINT	RW	Possible	N
	02	Ch2 SP Response Proportional Band*2	80	1 to 9999	0.1°C or 0.1°F*3	UINT	RW	Possible	N
	03	Ch3 SP Response Proportional Band*2 *4	80	1 to 9999	0.1°C or 0.1°F*3	UINT	RW	Possible	N
	04	Ch4 SP Response Proportional Band*2 *4	80	1 to 9999	0.1°C or 0.1°F*3	UINT	RW	Possible	N

*1. The default value and data range for Number of Entries are as follows.

NX Units	Default value	Data range
NX-TC2405/TC2406/TC2408	2	2
NX-TC3405/TC3406/TC3408	4	4

*2. SP response proportional band for Ch□. This is an object held by standard control type models only.

*3. Follows the “Ch□ Temperature Unit” setting.

*4. Not in NX-TC2□□□.

Index (hex)	Subindex (hex)	Object name	Default value	Data range	Unit	Data type	Acce ss	I/O allo- cation	Data attribute
700C	---	SP Response Inte- gral Time	---	---	---	---	---	---	---
	00	Number of entries	*1	*1	---	USINT	RO	Not pos- sible	---
	01	Ch1 SP Response Integral Time*2	2330	0 to 39999	0.1 s	UINT	RW	Possible	N
	02	Ch1 SP Response Integral Time*2	2330	0 to 39999	0.1 s	UINT	RW	Possible	N
	03	Ch1 SP Response Integral Time*2 *3	2330	0 to 39999	0.1 s	UINT	RW	Possible	N
	04	Ch1 SP Response Integral Time*2 *3	2330	0 to 39999	0.1 s	UINT	RW	Possible	N

*1. The default value and data range for Number of Entries are as follows.

NX Units	Default value	Data range
NX-TC2405/TC2406/TC2408	2	2
NX-TC3405/TC3406/TC3408	4	4

*2. SP response proportional band for Ch□. This is an object held by standard control type models only.

*3. Not in NX-TC2□□□.

Index (hex)	Subindex (hex)	Object name	Default value	Data range	Unit	Data type	Acce ss	I/O allo- cation	Data attribute
700D	---	SP Response Derivative Time	---	---	---	---	---	---	---
	00	Number of entries	*1	*1	---	USINT	RO	Not pos- sible	---
	01	Ch1 SP Response Derivative Time*2	400	0 to 39999	0.1 s	UINT	RW	Possible	N
	02	Ch2 SP Response Derivative Time*2	400	0 to 39999	0.1 s	UINT	RW	Possible	N
	03	Ch3 SP Response Derivative Time*2 *3	400	0 to 39999	0.1 s	UINT	RW	Possible	N
	04	Ch4 SP Response Derivative Time*2 *3	400	0 to 39999	0.1 s	UINT	RW	Possible	N

*1. The default value and data range for Number of Entries are as follows.

NX Units	Default value	Data range
NX-TC2405/TC2406/TC2408	2	2
NX-TC3405/TC3406/TC3408	4	4

*2. SP response derivative time for Ch□. This is an object held by standard control type models only.

*3. Not in NX-TC2□□□.

Index (hex)	Subindex (hex)	Object name	Default value	Data range	Unit	Data type	Access	I/O allocation	Data attribute
700E	---	SP Response Coefficient Number	---	---	---	---	---	---	---
	00	Number of entries	*1	*1	---	USINT	RO	Not possible	---
	01	Ch1 SP Response Coefficient Number*2	0	0 to 9999	---	UINT	RW	Possible	N
	02	Ch2 SP Response Coefficient Number*2	0	0 to 9999	---	UINT	RW	Possible	N
	03	Ch3 SP Response Coefficient Number*2 *3	0	0 to 9999	---	UINT	RW	Possible	N
	04	Ch4 SP Response Coefficient Number*2 *3	0	0 to 9999	---	UINT	RW	Possible	N

*1. The default value and data range for Number of Entries are as follows.

NX Units	Default value	Data range
NX-TC2405/TC2406/TC2408	2	2
NX-TC3405/TC3406/TC3408	4	4

*2. SP response coefficient number for Ch□. This is an object held by standard control type models only.
*3. Not in NX-TC2□□□.

Index (hex)	Subindex (hex)	Object name	Default value	Data range	Unit	Data type	Access	I/O allocation	Data attribute
700F	---	Disturbance Proportional Band	---	---	---	---	---	---	---
	00	Number of entries	*1	*1	---	USINT	RO	Not possible	---
	01	Ch1 Disturbance Proportional Band*2	80	1 to 9999	0.1°C or 0.1°F*3	UINT	RW	Possible	N
	02	Ch2 Disturbance Proportional Band*2	80	1 to 9999	0.1°C or 0.1°F*3	UINT	RW	Possible	N
	03	Ch3 Disturbance Proportional Band*2 *4	80	1 to 9999	0.1°C or 0.1°F*3	UINT	RW	Possible	N
	04	Ch4 Disturbance Proportional Band*2 *4	80	1 to 9999	0.1°C or 0.1°F*3	UINT	RW	Possible	N

*1. The default value and data range for Number of Entries are as follows.

NX Units	Default value	Data range
NX-TC2405/TC2406/TC2408	2	2
NX-TC3405/TC3406/TC3408	4	4

*2. Disturbance proportional band for Ch□. This is an object held by standard control type models only.
*3. Follows the “Ch□ Temperature Unit” setting.
*4. Not in NX-TC2□□□.

Index (hex)	Subindex (hex)	Object name	Default value	Data range	Unit	Data type	Access	I/O allocation	Data attribute
7010	---	Disturbance Integral Time	---	---	---	---	---	---	---
	00	Number of entries	*1	*1	---	USINT	RO	Not possible	---
	01	Ch1 Disturbance Integral Time*2	2330	0 to 39999	0.1 s	UINT	RW	Possible	N
	02	Ch2 Disturbance Integral Time*2	2330	0 to 39999	0.1 s	UINT	RW	Possible	N
	03	Ch3 Disturbance Integral Time*2 *3	2330	0 to 39999	0.1 s	UINT	RW	Possible	N
	04	Ch4 Disturbance Integral Time*2 *3	2330	0 to 39999	0.1 s	UINT	RW	Possible	N

*1. The default value and data range for Number of Entries are as follows.

NX Units	Default value	Data range
NX-TC2405/TC2406/TC2408	2	2
NX-TC3405/TC3406/TC3408	4	4

*2. Disturbance integral time for Ch□. This is an object held by standard control type models only.

*3. Not in NX-TC2□□□.

Index (hex)	Subindex (hex)	Object name	Default value	Data range	Unit	Data type	Access	I/O allocation	Data attribute
7011	---	Disturbance Derivative Time	---	---	---	---	---	---	---
	00	Number of entries	*1	*1	---	USINT	RO	Not possible	---
	01	Ch1 Disturbance Derivative Time*2	400	0 to 39999	0.1 s	UINT	RW	Possible	N
	02	Ch2 Disturbance Derivative Time*2	400	0 to 39999	0.1 s	UINT	RW	Possible	N
	03	Ch3 Disturbance Derivative Time*2 *3	400	0 to 39999	0.1 s	UINT	RW	Possible	N
	04	Ch4 Disturbance Derivative Time*2 *3	400	0 to 39999	0.1 s	UINT	RW	Possible	N

*1. The default value and data range for Number of Entries are as follows.

NX Units	Default value	Data range
NX-TC2405/TC2406/TC2408	2	2
NX-TC3405/TC3406/TC3408	4	4

*2. Disturbance derivative time for Ch□. This is an object held by standard control type models only.

*3. Not in NX-TC2□□□.

Index (hex)	Subindex (hex)	Object name	Default value	Data range	Unit	Data type	Access	I/O allocation	Data attribute
7012	---	Alarm Value 1	---	---	---	---	---	---	---
	00	Number of entries	*1	*1	---	USINT	RO	Not possible	---
	01	Ch1 Alarm Value 1*2	0	-3200 to 3200	*3	REAL	RW	Possible	N
	02	Ch2 Alarm Value 1*2	0	-3200 to 3200	*3	REAL	RW	Possible	N
	03	Ch3 Alarm Value 1*2 *4	0	-3200 to 3200	*3	REAL	RW	Possible	N
	04	Ch4 Alarm Value 1*2 *4	0	-3200 to 3200	*3	REAL	RW	Possible	N

*1. The default value and data range for Number of Entries are as follows.

NX Units	Default value	Data range
NX-TC2405/TC2406/TC2407/TC2408	2	2
NX-TC3405/TC3406/TC3407/TC3408	4	4

*2. Alarm value 1 for Ch□.

*3. The unit becomes as shown below depending on the setting of Ch□ alarm 1 type.

Ch□ Alarm 1 Type Setting	Unit
1 to 11: Temperature alarm	°C or °F Follows the “Ch□ Temperature Unit” setting.
12: LBA (Loop Burnout Alarm)	Seconds

*4. Not in NX-TC2□□□.

Index (hex)	Subindex (hex)	Object name	Default value	Data range	Unit	Data type	Access	I/O allocation	Data attribute
7013	---	Alarm Value Upper Limit 1	---	---	---	---	---	---	---
	00	Number of entries	*1	*1	---	USINT	RO	Not possible	---
	01	Ch1 Alarm Value Upper Limit 1*2	0	-3200 to 3200	°C or °F*3	REAL	RW	Possible	N
	02	Ch2 Alarm Value Upper Limit 1*2	0	-3200 to 3200	°C or °F*3	REAL	RW	Possible	N
	03	Ch3 Alarm Value Upper Limit 1*2 *4	0	-3200 to 3200	°C or °F*3	REAL	RW	Possible	N
	04	Ch4 Alarm Value Upper Limit 1*2 *4	0	-3200 to 3200	°C or °F*3	REAL	RW	Possible	N

*1. The default value and data range for Number of Entries are as follows.

NX Units	Default value	Data range
NX-TC2405/TC2406/TC2407/TC2408	2	2
NX-TC3405/TC3406/TC3407/TC3408	4	4

*2. Alarm value upper limit 1 for Ch□.

*3. Follows the “Ch□ Temperature Unit” setting.

*4. Not in NX-TC2□□□.

Index (hex)	Subindex (hex)	Object name	Default value	Data range	Unit	Data type	Acce ss	I/O allo-cation	Data attribute
7014	---	Alarm Value Lower Limit 1	---	---	---	---	---	---	---
	00	Number of entries	*1	*1	---	USINT	RO	Not pos-sible	---
	01	Ch1 Alarm Value Lower Limit 1*2	0	-3200 to 3200	°C or °F*3	REAL	RW	Possible	N
	02	Ch2 Alarm Value Lower Limit 1*2	0	-3200 to 3200	°C or °F*3	REAL	RW	Possible	N
	03	Ch3 Alarm Value Lower Limit 1*2 *4	0	-3200 to 3200	°C or °F*3	REAL	RW	Possible	N
	04	Ch4 Alarm Value Lower Limit 1*2 *4	0	-3200 to 3200	°C or °F*3	REAL	RW	Possible	N

*1. The default value and data range for Number of Entries are as follows.

NX Units	Default value	Data range
NX-TC2405/TC2406/TC2407/TC2408	2	2
NX-TC3405/TC3406/TC3407/TC3408	4	4

*2. Alarm value lower limit 1 for Ch□.

*3. Follows the “Ch□ Temperature Unit” setting.

*4. Not in NX-TC2□□□.

Index (hex)	Subindex (hex)	Object name	Default value	Data range	Unit	Data type	Acce ss	I/O allo-cation	Data attribute
7015	---	Alarm Value 2	---	---	---	---	---	---	---
	00	Number of entries	*1	*1	---	USINT	RO	Not pos-sible	---
	01	Ch1 Alarm Value 2*2	0	-3200 to 3200	°C or °F*3	REAL	RW	Possible	N
	02	Ch2 Alarm Value 2*2	0	-3200 to 3200	°C or °F*3	REAL	RW	Possible	N
	03	Ch3 Alarm Value 2*2 *4	0	-3200 to 3200	°C or °F*3	REAL	RW	Possible	N
	04	Ch4 Alarm Value 2*2 *4	0	-3200 to 3200	°C or °F*3	REAL	RW	Possible	N

*1. The default value and data range for Number of Entries are as follows.

NX Units	Default value	Data range
NX-TC2405/TC2406/TC2407/TC2408	2	2
NX-TC3405/TC3406/TC3407/TC3408	4	4

*2. Alarm value 2 for Ch□.

*3. Follows the “Ch□ Temperature Unit” setting.

*4. Not in NX-TC2□□□.

Index (hex)	Subindex (hex)	Object name	Default value	Data range	Unit	Data type	Access	I/O allocation	Data attribute
7016	---	Alarm Value Upper Limit 2	---	---	---	---	---	---	---
	00	Number of entries	*1	*1	---	USINT	RO	Not possible	---
	01	Ch1 Alarm Value Upper Limit 2*2	0	-3200 to 3200	°C or °F*3	REAL	RW	Possible	N
	02	Ch2 Alarm Value Upper Limit 2*2	0	-3200 to 3200	°C or °F*3	REAL	RW	Possible	N
	03	Ch3 Alarm Value Upper Limit 2*2 *4	0	-3200 to 3200	°C or °F*3	REAL	RW	Possible	N
	04	Ch4 Alarm Value Upper Limit 2*2 *4	0	-3200 to 3200	°C or °F*3	REAL	RW	Possible	N

*1. The default value and data range for Number of Entries are as follows.

NX Units	Default value	Data range
NX-TC2405/TC2406/TC2407/TC2408	2	2
NX-TC3405/TC3406/TC3407/TC3408	4	4

*2. Alarm value upper limit 2 for Ch□.
*3. Follows the “Ch□ Temperature Unit” setting.
*4. Not in NX-TC2□□□.

Index (hex)	Subindex (hex)	Object name	Default value	Data range	Unit	Data type	Access	I/O allocation	Data attribute
7017	---	Alarm Value Lower Limit 2	---	---	---	---	---	---	---
	00	Number of entries	*1	*1	---	USINT	RO	Not possible	---
	01	Ch1 Alarm Value Lower Limit 2*2	0	-3200 to 3200	°C or °F*3	REAL	RW	Possible	N
	02	Ch2 Alarm Value Lower Limit 2*2	0	-3200 to 3200	°C or °F*3	REAL	RW	Possible	N
	03	Ch3 Alarm Value Lower Limit 2*2 *4	0	-3200 to 3200	°C or °F*3	REAL	RW	Possible	N
	04	Ch4 Alarm Value Lower Limit 2*2 *4	0	-3200 to 3200	°C or °F*3	REAL	RW	Possible	N

*1. The default value and data range for Number of Entries are as follows.

NX Units	Default value	Data range
NX-TC2405/TC2406/TC2407/TC2408	2	2
NX-TC3405/TC3406/TC3407/TC3408	4	4

*2. Alarm value lower limit 2 for Ch□.
*3. Follows the “Ch□ Temperature Unit” setting.
*4. Not in NX-TC2 □□□.

Index (hex)	Subindex (hex)	Object name	Default value	Data range	Unit	Data type	Access	I/O allocation	Data attribute
7018	---	Heater Burnout Detection Current	---	---	---	---	---	---	---
	00	Number of entries	*1	*1	---	USINT	RO	Not possible	---
	01	Ch1 Heater Burnout Detection Current*2	0	0 to 50	A	REAL	RW	Possible	N
	02	Ch2 Heater Burnout Detection Current*2	0	0 to 50	A	REAL	RW	Possible	N
	03	Ch3 Heater Burnout Detection Current*2 *3	0	0 to 50	A	REAL	RW	Possible	N
	04	Ch4 Heater Burnout Detection Current*2 *3	0	0 to 50	A	REAL	RW	Possible	N

*1. The default value and data range for Number of Entries are as follows.

NX Units	Default value	Data range
NX-TC2405	2	2
NX-TC3405	4	4

*2. Heater burnout detection current for Ch□. This is an object held by models with CT input only.

*3. Not in NX-TC2□□□.

Index (hex)	Subindex (hex)	Object name	Default value	Data range	Unit	Data type	Access	I/O allocation	Data attribute
7019	---	SSR Failure Detection Current	---	---	---	---	---	---	---
	00	Number of entries	*1	*1	---	USINT	RO	Not possible	---
	01	Ch1 SSR Failure Detection Current*2	50	0 to 50	A	REAL	RW	Possible	N
	02	Ch2 SSR Failure Detection Current*2	50	0 to 50	A	REAL	RW	Possible	N
	03	Ch3 SSR Failure Detection Current*2 *3	50	0 to 50	A	REAL	RW	Possible	N
	04	Ch4 SSR Failure Detection Current*2 *3	50	0 to 50	A	REAL	RW	Possible	N

*1. The default value and data range for Number of Entries are as follows.

NX Units	Default value	Data range
NX-TC2405	2	2
NX-TC3405	4	4

*2. SSR failure detection current for Ch□. This is an object held by models with CT input only.

*3. Not in NX-TC2□□□.

Index (hex)	Subindex (hex)	Object name	Default value	Data range	Unit	Data type	Access	I/O allocation	Data attribute
701A	---	PV Input Shift	---	---	---	---	---	---	---
	00	Number of entries	*1	*1	---	USINT	RO	Not possible	---
	01	Ch1 PV Input Shift*2	0	-1999 to 9999	0.1°C or 0.1°F*3	INT	RW	Possible	N
	02	Ch2 PV Input Shift*2	0	-1999 to 9999	0.1°C or 0.1°F*3	INT	RW	Possible	N
	03	Ch3 PV Input Shift*2 *4	0	-1999 to 9999	0.1°C or 0.1°F*3	INT	RW	Possible	N
	04	Ch4 PV Input Shift*2 *4	0	-1999 to 9999	0.1°C or 0.1°F*3	INT	RW	Possible	N

*1. The default value and data range for Number of Entries are as follows.

NX Units	Default value	Data range
NX-TC2405/TC2406/TC2407/TC2408	2	2
NX-TC3405/TC3406/TC3407/TC3408	4	4

*2. PV input shift for Ch□.
*3. Follows the “Ch□ Temperature Unit” setting.
*4. Not in NX-TC2□□□.

Index (hex)	Subindex (hex)	Object name	Default value	Data range	Unit	Data type	Access	I/O allocation	Data attribute
701B	---	Input Digital Filter	---	---	---	---	---	---	---
	00	Number of entries	*1	*1	---	USINT	RO	Not possible	---
	01	Ch1 Input Digital Filter*2	0	0 to 9999	0.1 s	UINT	RW	Possible	N
	02	Ch2 Input Digital Filter*2	0	0 to 9999	0.1 s	UINT	RW	Possible	N
	03	Ch3 Input Digital Filter*2 *3	0	0 to 9999	0.1 s	UINT	RW	Possible	N
	04	Ch4 Input Digital Filter*2 *3	0	0 to 9999	0.1 s	UINT	RW	Possible	N

*1. The default value and data range for Number of Entries are as follows.

NX Units	Default value	Data range
NX-TC2405/TC2406/TC2407/TC2408	2	2
NX-TC3405/TC3406/TC3407/TC3408	4	4

*2. Input digital filter for Ch□.
*3. Not in NX-TC2□□□.

Index (hex)	Subindex (hex)	Object name	Default value	Data range	Unit	Data type	Access	I/O allocation	Data attribute
701C	---	Hysteresis (Heating)	---	---	---	---	---	---	---
	00	Number of entries	*1	*1	---	USINT	RO	Not possible	---
	01	Ch1 Hysteresis (Heating)*2	10	1 to 9999	0.1°C or 0.1°F*3	UINT	RW	Possible	N
	02	Ch2 Hysteresis (Heating)*2	10	1 to 9999	0.1°C or 0.1°F*3	UINT	RW	Possible	N
	03	Ch3 Hysteresis (Heating)*2 *4	10	1 to 9999	0.1°C or 0.1°F*3	UINT	RW	Possible	N
	04	Ch4 Hysteresis (Heating)*2 *4	10	1 to 9999	0.1°C or 0.1°F*3	UINT	RW	Possible	N

*1. The default value and data range for Number of Entries are as follows.

NX Units	Default value	Data range
NX-TC2405/TC2406/TC2407/TC2408	2	2
NX-TC3405/TC3406/TC3407/TC3408	4	4

*2. Hysteresis (heating) for Ch□.
*3. Follows the “Ch□ Temperature Unit” setting.
*4. Not in NX-TC2□□□.

Index (hex)	Subindex (hex)	Object name	Default value	Data range	Unit	Data type	Access	I/O allocation	Data attribute
701D	---	Hysteresis (Cooling)	---	---	---	---	---	---	---
	00	Number of entries	*1	*1	---	USINT	RO	Not possible	---
	01	Ch1 Hysteresis (Cooling)*2	10	1 to 9999	0.1°C or 0.1°F*3	UINT	RW	Possible	N
	02	Ch2 Hysteresis (Cooling)*2	10	1 to 9999	0.1°C or 0.1°F*3	UINT	RW	Possible	N
	03	Ch3 Hysteresis (Cooling)*2 *4	10	1 to 9999	0.1°C or 0.1°F*3	UINT	RW	Possible	N
	04	Ch4 Hysteresis (Cooling)*2 *4	10	1 to 9999	0.1°C or 0.1°F*3	UINT	RW	Possible	N

*1. The default value and data range for Number of Entries are as follows.

NX Units	Default value	Data range
NX-TC2407	2	2
NX-TC3407	4	4

*2. Hysteresis (cooling) for Ch□. This is an object held by heating/cooling control type models only.
*3. Follows the “Ch□ Temperature Unit” setting.
*4. Not in NX-TC2□□□.

A-3-4 Other Objects

This section lists other objects.

Index (hex)	Subindex (hex)	Object name	Default value	Data range	Unit	Data type	Acce ss	I/O alloca-tion	Data attribute
5000	---	Ch Enable/Disable	---	---	---	---	---	---	---
	00	Number of entries	*1	*1	---	USINT	RO	Not possible	---
	01	Ch1 Enable/Disable	TRUE	FALSE/TRUE	---	BOOL	RW	Not possible	Y
	11	Ch2 Enable/Disable	TRUE	FALSE/TRUE	---	BOOL	RW	Not possible	Y
	21	Ch3 Enable/Dis-able*2	TRUE	FALSE/TRUE	---	BOOL	RW	Not possible	Y
	31	Ch4 Enable/Dis-able*2	TRUE	FALSE/TRUE	---	BOOL	RW	Not possible	Y

*1. The default value and data range for Number of Entries are as follows.

NX Units	Default value	Data range
NX-TC2405/TC2406/TC2407/TC2408	31	31
NX-TC3405/TC3406/TC3407/TC3408	63	63

*2. Not in NX-TC2 □□□.

- Refer to *Channel enable/disable parameters* on page 6-34 under *List of Settings* on page 6-33 for the function and meaning of each set value for the Ch Enable/Disable objects.

Index (hex)	Subindex (hex)	Object name	Default value	Data range	Unit	Data type	Acce ss	I/O alloca-tion	Data attribute
5001	---	Inputs	---	---	---	---	---	---	---
	00	Number of entries	*1	*1	---	USINT	RO	Not possible	---
	01	Ch1 Input Type	5	0 to 20	---	USINT	RW	Not possible	Y
	02	Ch1 Temperature Unit	0	0/1	---	USINT	RW	Not possible	Y
	03	Ch1 Decimal Point	2	0/1/2	---	USINT	RW	Not possible	Y
	04	Ch1 Cold Junction Compensation Enable/Disable	TRUE	FALSE or TRUE	---	BOOL	RW	Not possible	Y
	05	Ch1 PV Input Shift	0	−1999 to 9999	0.1°C or 0.1°F	INT	RW	Not possible	N
	06	Ch1 PV Input Slope Coefficient	1000	1 to 9999	0.001	INT	RW	Not possible	N
	07	Ch1 Input Digital Filter	0	0 to 9999	0.1 s	UINT	RW	Not possible	N
	11	Ch2 Input Type	5	0 to 20	---	USINT	RW	Not possible	Y
	12	Ch2 Temperature Unit	0	0/1	---	USINT	RW	Not possible	Y
	13	Ch2 Decimal Point	2	0/1/2	---	USINT	RW	Not possible	Y
	14	Ch2 Cold Junction Compensation Enable/Disable	TRUE	FALSE or TRUE	---	BOOL	RW	Not possible	Y
	15	Ch2 PV Input Shift	0	−1999 to 9999	0.1°C or 0.1°F	INT	RW	Not possible	N

Index (hex)	Subindex (hex)	Object name	Default value	Data range	Unit	Data type	Access	I/O allocation	Data attribute
5001	16	Ch2 PV Input Slope Coefficient	1000	1 to 9999	0.001	INT	RW	Not possible	N
	17	Ch2 Input Digital Filter	0	0 to 9999	0.1 s	UINT	RW	Not possible	N
	21	Ch3 Input Type*2	5	0 to 20	---	USINT	RW	Not possible	Y
	22	Ch3 Temperature Unit*2	0	0/1	---	USINT	RW	Not possible	Y
	23	Ch3 Decimal Point*2	2	0/1/2	---	USINT	RW	Not possible	Y
	24	Ch3 Cold Junction Compensation Enable/Disable*2	TRUE	FALSE or TRUE	---	BOOL	RW	Not possible	Y
	25	Ch3 PV Input Shift*2	0	−1999 to 9999	0.1°C or 0.1°F	INT	RW	Not possible	N
	26	Ch3 PV Input Slope Coefficient*2	1000	1 to 9999	0.001	INT	RW	Not possible	N
	27	Ch3 Input Digital Filter*2	0	0 to 9999	0.1 s	UINT	RW	Not possible	N
	31	Ch4 Input Type*2	5	0 to 20	---	USINT	RW	Not possible	Y
	32	Ch4 Temperature Unit*2	0	0/1	---	USINT	RW	Not possible	Y
	33	Ch4 Decimal Point *2	2	0/1/2	---	USINT	RW	Not possible	Y
	34	Ch4 Cold Junction Compensation Enable/Disable*2	TRUE	FALSE or TRUE	---	BOOL	RW	Not possible	Y
	35	Ch4 PV Input Shift*2	0	−1999 to 9999	0.1°C or 0.1°F	INT	RW	Not possible	N
	36	Ch4 PV Input Slope Coefficient*2	1000	1 to 9999	0.001	INT	RW	Not possible	N
	37	Ch4 Input Digital Filter*2	0	0 to 9999	0.1 s	UINT	RW	Not possible	N

*1. The default value and data range for Number of Entries are as follows.

NX Units	Default value	Data range
NX-TC2405/TC2406/TC2407/TC2408	31	31
NX-TC3405/TC3406/TC3407/TC3408	63	63

*2. Not in NX-TC2 □□□.

- Refer to *Input function parameters* on page 6-34 under *6-2 List of Settings* on page 6-33 for the function and meaning of each set value for the input objects.

Index (hex)	Subindex (hex)	Object name	Default value	Data range	Unit	Data type	Access	I/O allocation	Data attribute
5002	---	Control Common	---	---	---	---	---	---	---
	00	Number of entries	*1	*1	---	USINT	RO	Not possible	---
	01	Ch1 PID ON/OFF	1	0/1	---	USINT	RW	Not possible	Y
	02	Ch1 Proportional Band	80	1 to 9999	0.1°C or 0.1°F	UINT	RW	Not possible	N
	03	Ch1 Integration Time	2330	0 to 39999	0.1 s	UINT	RW	Not possible	N
	04	Ch1 Derivative Time	400	0 to 39999	0.1 s	UINT	RW	Not possible	N
	05	Ch1 Hysteresis (Heating)	10	1 to 9999	0.1°C or 0.1°F	UINT	RW	Not possible	N
	06	Ch1 Direct/Reverse Operation	0	0/1	---	USINT	RW	Not possible	Y
	07	MV at Error	*2	*2	0.1%	INT	RW	Not possible	N
	08	MV Upper Limit	*3	*3	0.1%	INT	RW	Not possible	N
	09	MV Lower Limit	*4	*4	0.1%	INT	RW	Not possible	N
	0A	Ch1 Load Rejection Output Setting	0	0/1	---	USINT	RW	Not possible	Y
	0B	Ch1 Load Rejection MV	*5	*5	0.1%	INT	RW	Not possible	N
	11	Ch2 PID ON/OFF	1	0/1	---	USINT	RW	Not possible	Y
	12	Ch2 Proportional Band	80	1 to 9999	0.1°C or 0.1°F	UINT	RW	Not possible	N
	13	Ch2 Integration Time	2330	0 to 39999	0.1 s	UINT	RW	Not possible	N
	14	Ch2 Derivative Time	400	0 to 39999	0.1 s	UINT	RW	Not possible	N
	15	Ch2 Hysteresis (Heating)	10	1 to 9999	0.1°C or 0.1°F	UINT	RW	Not possible	N
	16	Ch2 Direct/Reverse Operation	0	0/1	---	USINT	RW	Not possible	Y
	17	MV at Error	*2	*2	0.1%	INT	RW	Not possible	N
	18	MV Upper Limit	*3	*3	0.1%	INT	RW	Not possible	N
	19	MV Lower Limit	*4	*4	0.1%	INT	RW	Not possible	N
	1A	Ch2 Load Rejection Output Setting	0	0/1	---	USINT	RW	Not possible	Y
	1B	Ch2 Load Rejection MV	*5	*5	0.1%	INT	RW	Not possible	N
	21	Ch3 PID ON/OF*6	1	0/1	---	USINT	RW	Not possible	Y
	22	Ch3 Proportional Band*6	80	1 to 9999	0.1°C or 0.1°F	UINT	RW	Not possible	N
	23	Ch3 Integration Time*6	2330	0 to 39999	0.1 s	UINT	RW	Not possible	N

Index (hex)	Subindex (hex)	Object name	Default value	Data range	Unit	Data type	Access	I/O allocation	Data attribute
5002	24	Ch3 Derivative Time*6	400	0 to 39999	0.1 s	UINT	RW	Not possible	N
	25	Ch3 Hysteresis (Heating)*6	10	1 to 9999	0.1°C or 0.1°F	UINT	RW	Not possible	N
	26	Ch3 Direct/Reverse Operation*6	0	0/1	---	USINT	RW	Not possible	Y
	27	MV at Error*6	*2	*2	0.1%	INT	RW	Not possible	N
	28	MV Upper Limit*6	*3	*3	0.1%	INT	RW	Not possible	N
	29	MV Lower Limit*6	*4	*4	0.1%	INT	RW	Not possible	N
	2A	Ch3 Load Rejection Output Settinge*6	0	0/1	---	USINT	RW	Not possible	Y
	2B	Ch3 Load Rejection MV*6	*5	*5	0.1%	INT	RW	Not possible	N
	31	Ch4 PID ON/OFF*6	1	0/1	---	USINT	RW	Not possible	Y
	32	Ch4 Proportional Band*6	80	1 to 9999	0.1°C or 0.1°F	UINT	RW	Not possible	N
	33	Ch4 Integration Time*6	2330	0 to 39999	0.1 s	UINT	RW	Not possible	N
	34	Ch4 Derivative Time*6	400	0 to 39999	0.1 s	UINT	RW	Not possible	N
	35	Ch4 Hysteresis (Heating)*6	10	1 to 9999	0.1°C or 0.1°F	UINT	RW	Not possible	N
	36	Ch4 Direct/Reverse Operation*6	0	0/1	---	USINT	RW	Not possible	Y
	37	MV at Error*6	*2	*2	0.1%	INT	RW	Not possible	N
	38	MV Upper Limit*6	*3	*3	0.1%	INT	RW	Not possible	N
	39	MV Lower Limit*6	*4	*4	0.1%	INT	RW	Not possible	N
	3A	Ch4 Load Rejection Output Settinge*6	0	0/1	---	USINT	RW	Not possible	Y
	3B	Ch4 Load Rejection MV*6	*5	*5	0.1%	INT	RW	Not possible	N

*1. The default value and data range for Number of Entries are as follows.

NX Units	Default value	Data range
NX-TC2405/TC2406/TC2407/TC2408	31	31
NX-TC3405/TC3406/TC3407/TC3408	63	63

*2. The default value and data range for "Ch□ MV at Error" are as follows.

NX Units	Default value	Data range
NX-TC2405/TC2406/TC2408 NX-TC3405/TC3406/TC3408	0	-50 to 1050
NX-TC2407 NX-TC3407	0	-1050 to 1050

*3. The default value and data range for "Ch□ MV Upper Limit" are as follows.

NX Units	Default value	Data range
NX-TC2405/TC2406/TC2408 NX-TC3405/TC3406/TC3408	1000	-50 to 1050
NX-TC2407 NX-TC3407	1000	0 to 1050

*4. The default value and data range for "Ch□ MV Lower Limit" are as follows.

NX Units	Default value	Data range
NX-TC2405/TC2406/TC2408 NX-TC3405/TC3406/TC3408	0	-50 to 1050
NX-TC2407 NX-TC3407	-1000	-1050 to 0

*5. The default value and data range for "Ch□ Load Rejection MV" are as follows.

NX Units	Default value	Data range
NX-TC2405/TC2406/TC2408 NX-TC3405/TC3406/TC3408	0	-50 to 1050
NX-TC2407 NX-TC3407	0	-1050 to 1050

*6. Not in NX-TC2 □□□.

- Refer to *Control common parameters* on page 6-36 under *6-2 List of Settings* on page 6-33 for the function and meaning of each set value for the control common objects.

Index (hex)	Subindex (hex)	Object name	Default	Data range	Unit	Data type	Access	I/O allocation	Data attribute
5003	---	Heating and Cooling Control	---	---	---	---	---	---	---
	00	Number of entries	*1	*1	---	USINT	RO	Not possible.	---
	01	Ch1 Proportional Band (Cooling)	80	1 to 9999	0.1°C or 0.1°F	UINT	RW	Not possible.	N
	02	Ch1 Integral Time (Cooling)	2330	0 to 39999	0.1 s	UINT	RW	Not possible.	N
	03	Ch1 Derivative Time (Cooling)	400	0 to 39999	0.1 s	UINT	RW	Not possible.	N
	04	Ch1 Dead Band	0	-1999 to 9999	0.1°C or 0.1°F	INT	RW	Not possible.	N
	05	Ch1 Hysteresis (Cooling)	10	1 to 9999	0.1°C or 0.1°F	UINT	RW	Not possible.	N
	06	Ch1 Heating/Cooling Tuning Method	0	0/1/2/3	---	USINT	RW	Not possible.	Y
	07	Ch1 LCT Cooling Output Minimum ON Time	2	1 to 10	0.1 s	USINT	RW	Not possible.	Y
	11	Ch2 Proportional Band (Cooling)	80	1 to 9999	0.1°C or 0.1°F	UINT	RW	Not possible.	N
	12	Ch2 Integral Time (Cooling)	2330	0 to 39999	0.1 s	UINT	RW	Not possible.	N
	13	Ch2 Derivative Time (Cooling)	400	0 to 39999	0.1 s	UINT	RW	Not possible.	N
	14	Ch2 Dead Band	0	-1999 to 9999	0.1°C or 0.1°F	INT	RW	Not possible.	N
	15	Ch2 Hysteresis (Cooling)	10	1 to 9999	0.1°C or 0.1°F	UINT	RW	Not possible.	N

Index (hex)	Subindex (hex)	Object name	Default	Data range	Unit	Data type	Access	I/O allocation	Data attribute
5003	16	Ch2 Heating/Cooling Tuning Method	0	0/1/2/3	---	USINT	RW	Not possible.	Y
	17	Ch2 LCT Cooling Output Minimum ON Time	2	1 to 10	0.1 s	USINT	RW	Not possible.	Y
	21	Ch3 Proportional Band (Cooling)*2	80	1 to 9999	0.1°C or 0.1°F	UINT	RW	Not possible.	N
	22	Ch3 Integral Time (Cooling)*2	2330	0 to 39999	0.1 s	UINT	RW	Not possible.	N
	23	Ch3 Derivative Time (Cooling)*2	400	0 to 39999	0.1 s	UINT	RW	Not possible.	N
	24	Ch3 Dead Band*2	0	-1999 to 9999	0.1°C or 0.1°F	INT	RW	Not possible.	N
	25	Ch3 Hysteresis (Cooling)*2	10	1 to 9999	0.1°C or 0.1°F	UINT	RW	Not possible.	N
	26	Ch3 Heating/Cooling Tuning Method*2	0	0/1/2/3	---	USINT	RW	Not possible.	Y
	27	Ch3 LCT Cooling Output Minimum ON Time*2	2	1 to 10	0.1 s	USINT	RW	Not possible.	Y
	31	Ch4 Proportional Band (Cooling)*2	80	1 to 9999	0.1°C or 0.1°F	UINT	RW	Not possible.	N
	32	Ch4 Integral Time (Cooling)*2	2330	0 to 39999	0.1 s	UINT	RW	Not possible.	N
	33	Ch4 Derivative Time (Cooling)*2	400	0 to 39999	0.1 s	UINT	RW	Not possible.	N
	34	Ch4 Dead Band*2	0	-1999 to 9999	0.1°C or 0.1°F	INT	RW	Not possible.	N
	35	Ch4 Hysteresis (Cooling)*2	10	1 to 9999	0.1°C or 0.1°F	UINT	RW	Not possible.	N
	36	Ch4 Heating/Cooling Tuning Method*2	0	0/1/2/3	---	USINT	RW	Not possible.	Y
	37	Ch4 LCT Cooling Output Minimum ON Time*2	2	1 to 10	0.1 s	USINT	RW	Not possible.	Y

*1. The default value and data range for Number of Entries are as follows.

NX Units	Default value	Data range
NX-TC2407	31	31
NX-TC3407	63	63

*2. Not in NX-TC2 □□□.

- Refer to *Heating and cooling control parameters* on page 6-38 under *6-2 List of Settings* on page 6-33 for the function and meaning of each set value for the heating and cooling control objects.

Index (hex)	Subindex (hex)	Object name	Default	Data range	Unit	Data type	Access	I/O allocation	Data attribute
5004	---	Automatic Filter Adjustment	---	---	---	---	---	---	---
	00	Number of entries	*1	*1	---	USINT	RO	Not possible.	---
	01	Ch1 Automatic Filter Adjustment Seal Period	20	1 to 100	0.1 s	UINT	RW	Not possible.	Y
	02	Ch1 Automatic Filter Adjustment Hunting Monitor Period	200	10 to 1999	Seconds	UINT	RW	Not possible.	Y
	11	Ch2 Automatic Filter Adjustment Seal Period	20	1 to 100	0.1 s	UINT	RW	Not possible.	Y
	12	Ch2 Automatic Filter Adjustment Hunting Monitor Period	200	10 to 1999	Seconds	UINT	RW	Not possible.	Y
	21	Ch3 Automatic Filter Adjustment Seal Period*2	20	1 to 100	0.1 s	UINT	RW	Not possible.	Y
	22	Ch3 Automatic Filter Adjustment Hunting Monitor Period*2	200	10 to 1999	Seconds	UINT	RW	Not possible.	Y
	31	Ch4 Automatic Filter Adjustment Seal Period*2	20	1 to 100	0.1 s	UINT	RW	Not possible.	Y
	32	Ch4 Automatic Filter Adjustment Hunting Monitor Period*2	200	10 to 1999	Seconds	UINT	RW	Not possible.	Y

*1. The default value and data range for Number of Entries are as follows.

NX Units	Default value	Data range
NX-TC2405/TC2406/TC2408	31	31
NX-TC3405/TC3406/TC3408	63	63

*2. Not in NX-TC2 □□□.

- Refer to *Automatic filter adjustment parameters* on page 6-39 under *6-2 List of Settings* on page 6-33 for the function and meaning of each set value for the automatic filter adjustment objects.

Index (hex)	Subindex (hex)	Object name	Default	Data range	Unit	Data type	Access	I/O allocation	Data attribute
5005	---	Water cooling output adjustment function	---	---	---	---	---	---	---
	00	Number of entries	*1	*1	---	USINT	RO	Not possible.	---
	01	Ch1 Water-cooling Proportional Band Increase Constant	170	100 to 1000	0.01	UINT	RW	Not possible.	Y
	02	Ch1 Water-cooling Proportional Band Decrease Constant	90	10 to 99	0.01	UINT	RW	Not possible.	Y
	03	Ch1 Water-cooling Proportional Band Increase Threshold	14	1 to 2000	0.1°C or 0.1°F	INT	RW	Not possible.	N
	04	Ch1 Water-cooling Proportional Band Decrease Threshold	6	0 to 2000	0.1°C or 0.1°F	INT	RW	Not possible.	N
	11	Ch2 Water-cooling Proportional Band Increase Constant	170	100 to 1000	0.01	UINT	RW	Not possible.	Y
	12	Ch2 Water-cooling Proportional Band Decrease Constant	90	10 to 99	0.01	UINT	RW	Not possible.	Y
	13	Ch2 Water-cooling Proportional Band Increase Threshold	14	1 to 2000	0.1°C or 0.1°F	INT	RW	Not possible.	N
	14	Ch2 Water-cooling Proportional Band Decrease Threshold	6	0 to 2000	0.1°C or 0.1°F	INT	RW	Not possible.	N
	21	Ch3 Water-cooling Proportional Band Increase Constant*2	170	100 to 1000	0.01	UINT	RW	Not possible.	Y
	22	Ch3 Water-cooling Proportional Band Decrease Constant*2	90	10 to 99	0.01	UINT	RW	Not possible.	Y
	23	Ch3 Water-cooling Proportional Band Increase Threshold*2	14	1 to 2000	0.1°C or 0.1°F	INT	RW	Not possible.	N
	24	Ch3 Water-cooling Proportional Band Decrease Threshold*2	6	0 to 2000	0.1°C or 0.1°F	INT	RW	Not possible.	N
	31	Ch4 Water-cooling Proportional Band Increase Constant*2	170	100 to 1000	0.01	UINT	RW	Not possible.	Y
	32	Ch4 Water-cooling Proportional Band Decrease Constant*2	90	10 to 99	0.01	UINT	RW	Not possible.	Y
	33	Ch4 Water-cooling Proportional Band Increase Threshold*2	14	1 to 2000	0.1°C or 0.1°F	INT	RW	Not possible.	N
	34	Ch4 Water-cooling Proportional Band Decrease Threshold*2	6	0 to 2000	0.1°C or 0.1°F	INT	RW	Not possible.	N

*1. The default value and data range for Number of Entries are as follows.

NX Units	Default value	Data range
NX-TC2407	31	31
NX-TC3407	63	63

*2. Not in NX-TC2 □□□.

- Refer to *Water cooling output adjustment parameters* on page 6-40 under *6-2 List of Settings* on page 6-33 for the function and meaning of each set value for the water cooling output adjustment objects.

Index (hex)	Subindex (hex)	Object name	Default	Data range	Unit	Data type	Access	I/O allocation	Data attribute
5006	---	Adaptive control	---	---	---	---	---	---	---
	00	Number of entries	*1	*1	---	USINT	RO	Not possible.	---
	01	Ch1 Adaptive Control	0	0/1/2/3	---	USINT	RW	Not possible.	Y
	02	Ch1 Model Creation PV Amplitude	0	0 to 9999	0.01%FS	UINT	RW	Not possible.	Y
	03	Ch1 Model Creation MV Amplitude	0	0 to 1000	0.1%FS	UINT	RW	Not possible.	Y
	04	Ch1 Model Creation ON Time	0	0 to 9999	---	UINT	RW	Not possible.	Y
	05	Ch1 Model Creation OFF Time	0	0 to 9999	---	UINT	RW	Not possible.	Y
	06	Ch1 Adaptive Control Operation Possible Deviation	500	1 to 1000	0.1%	UINT	RW	Not possible.	Y
	07	Ch1 System Fluctuation Reference Deviation	150	1 to 1000	0.1%	UINT	RW	Not possible.	Y
	08	Ch1 System Fluctuation Reference Proportional Band	0	0 to 9999	0.1°C or 0.1°F	UINT	RO	Not possible.	---
	09	Ch1 System Fluctuation Average Deviation	0	0 to 10000	0.1%	UINT	RO	Not possible.	---
	11	Ch2 Adaptive Control	0	0/1/2/3	---	USINT	RW	Not possible.	Y
	12	Ch2 Model Creation PV Amplitude	0	0 to 9999	0.01%FS	UINT	RW	Not possible.	Y
	13	Ch2 Model Creation MV Amplitude	0	0 to 1000	0.1%FS	UINT	RW	Not possible.	Y
	14	Ch2 Model Creation ON Time	0	0 to 9999	---	UINT	RW	Not possible.	Y
	15	Ch2 Model Creation OFF Time	0	0 to 9999	---	UINT	RW	Not possible.	Y
	16	Ch2 Adaptive Control Operation Possible Deviation	500	1 to 1000	0.1%	UINT	RW	Not possible.	Y
	17	Ch2 System Fluctuation Reference Deviation	150	1 to 1000	0.1%	UINT	RW	Not possible.	Y
	18	Ch2 System Fluctuation Reference Proportional Band	0	0 to 9999	0.1°C or 0.1°F	UINT	RO	Not possible.	---
	19	Ch2 System Fluctuation Average Deviation	0	0 to 10000	0.1%	UINT	RO	Not possible.	---

Index (hex)	Subindex (hex)	Object name	Default	Data range	Unit	Data type	Access	I/O allocation	Data attribute
5006	21	Ch3 Adaptive Control*2	0	0/1/2/3	---	USINT	RW	Not possible.	Y
	22	Ch3 Model Creation PV Amplitude*2	0	0 to 9999	0.01%FS	UINT	RW	Not possible.	Y
	23	Ch3 Model Creation MV Amplitude*2	0	0 to 1000	0.1%FS	UINT	RW	Not possible.	Y
	24	Ch3 Model Creation ON Time*2	0	0 to 9999	---	UINT	RW	Not possible.	Y
	25	Ch3 Model Creation OFF Time*2	0	0 to 9999	---	UINT	RW	Not possible.	Y
	26	Ch3 Adaptive Control Operation Possible Deviation*2	500	1 to 1000	0.1%	UINT	RW	Not possible.	Y
	27	Ch3 System Fluctuation Reference Deviation*2	150	1 to 1000	0.1%	UINT	RW	Not possible.	Y
	28	Ch3 System Fluctuation Reference Proportional Band*2	0	0 to 9999	0.1°C or 0.1°F	UINT	RO	Not possible.	---
	29	Ch3 System Fluctuation Average Deviation*2	0	0 to 10000	0.1%	UINT	RO	Not possible.	---
	31	Ch4 Adaptive Control*2	0	0/1/2/3	---	USINT	RW	Not possible.	Y
	32	Ch4 Model Creation PV Amplitude*2	0	0 to 9999	0.01%FS	UINT	RW	Not possible.	Y
	33	Ch4 Model Creation MV Amplitude*2	0	0 to 1000	0.1%FS	UINT	RW	Not possible.	Y
	34	Ch4 Model Creation ON Time*2	0	0 to 9999	---	UINT	RW	Not possible.	Y
	35	Ch4 Model Creation OFF Time*2	0	0 to 9999	---	UINT	RW	Not possible.	Y
	36	Ch4 Adaptive Control Operation Possible Deviation*2	500	1 to 1000	0.1%	UINT	RW	Not possible.	Y
	37	Ch4 System Fluctuation Reference Deviation*2	150	1 to 1000	0.1%	UINT	RW	Not possible.	Y
	38	Ch4 System Fluctuation Reference Proportional Band*2	0	0 to 9999	0.1°C or 0.1°F	UINT	RO	Not possible.	---
	39	Ch4 System Fluctuation Average Deviation*2	0	0 to 10000	0.1%	UINT	RO	Not possible.	---

*1. The default value and data range for Number of Entries are as follows.

NX Units	Default value	Data range
NX-TC2405/TC2406/TC2408	31	31
NX-TC3405/TC3406/TC3408	63	63

*2. Not in NX-TC2 □□□.

- Refer to *Adaptive control parameters* on page 6-42 under *6-2 List of Settings* on page 6-33 for the function and meaning of each set value for the adaptive control objects.

Index (hex)	Subindex (hex)	Object name	Default	Data range	Unit	Data type	Access	I/O allocation	Data attribute
5007	---	Adaptive control PID constant	---	---	---	---	---	---	---
	00	Number of entries	*1	*1	---	USINT	RO	Not possible.	---
	01	Ch1 SP Response Proportional Band	80	1 to 9999	0.1°C or 0.1°F	UINT	RW	Not possible.	N
	02	Ch1 SP Response Integral Time	2330	0 to 39999	0.1 s	UINT	RW	Not possible.	N
	03	Ch1 SP Response Derivative Time	400	0 to 39999	0.1 s	UINT	RW	Not possible.	N
	04	Ch1 SP Response Coefficient Number	0	0 to 9999	---	UINT	RW	Not possible.	N
	05	Ch1 Disturbance Proportional Band	80	1 to 9999	0.1°C or 0.1°F	UINT	RW	Not possible.	N
	06	Ch1 Disturbance Integral Time	2330	0 to 39999	0.1 s	UINT	RW	Not possible.	N
	07	Ch1 Disturbance Derivative Time	400	0 to 39999	0.1 s	UINT	RW	Not possible.	N
	11	Ch2 SP Response Proportional Band	80	1 to 9999	0.1°C or 0.1°F	UINT	RW	Not possible.	N
	12	Ch2 SP Response Integral Time	2330	0 to 39999	0.1 s	UINT	RW	Not possible.	N
	13	Ch2 SP Response Derivative Time	400	0 to 39999	0.1 s	UINT	RW	Not possible.	N
	14	Ch2 SP Response Coefficient Number	0	0 to 9999	---	UINT	RW	Not possible.	N
	15	Ch2 Disturbance Proportional Band	80	1 to 9999	0.1°C or 0.1°F	UINT	RW	Not possible.	N
	16	Ch2 Disturbance Integral Time	2330	0 to 39999	0.1 s	UINT	RW	Not possible.	N
	17	Ch2 Disturbance Derivative Time	400	0 to 39999	0.1 s	UINT	RW	Not possible.	N
	21	Ch3 SP Response Proportional Band*2	80	1 to 9999	0.1°C or 0.1°F	UINT	RW	Not possible.	N
	22	Ch3 SP Response Integral Time*2	2330	0 to 39999	0.1 s	UINT	RW	Not possible.	N
	23	Ch3 SP Response Derivative Time*2	400	0 to 39999	0.1 s	UINT	RW	Not possible.	N
	24	Ch3 SP Response Coefficient Number*2	0	0 to 9999	---	UINT	RW	Not possible.	N
	25	Ch3 Disturbance Proportional Band*2	80	1 to 9999	0.1°C or 0.1°F	UINT	RW	Not possible.	N
	26	Ch3 Disturbance Integral Time*2	2330	0 to 39999	0.1 s	UINT	RW	Not possible.	N
	27	Ch3 Disturbance Derivative Time*2	400	0 to 39999	0.1 s	UINT	RW	Not possible.	N
	31	Ch4 SP Response Proportional Band*2	80	1 to 9999	0.1°C or 0.1°F	UINT	RW	Not possible.	N
	32	Ch4 SP Response Integral Time*2	2330	0 to 39999	0.1 s	UINT	RW	Not possible.	N
	33	Ch4 SP Response Derivative Time*2	400	0 to 39999	0.1 s	UINT	RW	Not possible.	N

Index (hex)	Subindex (hex)	Object name	Default	Data range	Unit	Data type	Access	I/O allocation	Data attribute
5007	34	Ch4 SP Response Coefficient Number*2	0	0 to 9999	---	UINT	RW	Not possible.	N
	35	Ch4 Disturbance Proportional Band*2	80	1 to 9999	0.1°C or 0.1°F	UINT	RW	Not possible.	N
	36	Ch4 Disturbance Integral Time*2	2330	0 to 39999	0.1 s	UINT	RW	Not possible.	N

*1. The default value and data range for Number of Entries are as follows.

NX Units	Default value	Data range
NX-TC2405/TC2406/TC2408	31	31
NX-TC3405/TC3406/TC3408	63	63

*2. Not in NX-TC2 □□□.

- Refer to *PID constant parameters for adaptive control* on page 6-45 under *6-2 List of Settings* on page 6-33 for the function and meaning of each set vale for the PID constant objects for adaptive control.

Index (hex)	Subindex (hex)	Object name	Default	Data range	Unit	Data type	Access	I/O allocation	Data attribute
5009	---	Control Common - Voltage Output (for driving SSR)	---	---	---	---	---	Not possible.	---
	00	Number of entries	*1	*1	---	USINT	RO	Not possible.	---
	01	Ch1 Control Period (Heating)	2	-2 to 99	---	INT	RW	Not possible.	Y
	02	Ch1 Minimum Output ON/OFF Band	10	0 to 500	0.1%	UINT	RW	Not possible.	Y
	11	Ch2 Control Period (Heating)	2	-2 to 99	---	INT	RW	Not possible.	Y
	12	Ch2 Minimum Output ON/OFF Band	10	0 to 500	0.1%	UINT	RW	Not possible.	Y
	21	Ch3 Control Period (Heating)*2	2	-2 to 99	---	INT	RW	Not possible.	Y
	22	Ch3 Minimum Output ON/OFF Band*2	10	0 to 500	0.1%	UINT	RW	Not possible.	Y
	31	Ch4 Control Period (Heating)*2	2	-2 to 99	---	INT	RW	Not possible.	Y
	32	Ch4 Minimum Output ON/OFF Band*2	10	0 to 500	0.1%	UINT	RW	Not possible.	Y

*1. The default value and data range for Number of Entries are as follows.

NX Units	Default value	Data range
NX-TC2405/TC2406/TC2407	31	31
NX-TC3405/TC3406/TC3407	63	63

*2. Not in NX-TC2 □□□.

- Refer to *Setting parameters for voltage output for driving SSR that are common to all control models* on page 6-47 under *6-2 List of Settings* on page 6-33 for the function and meaning of each set value for the objects for voltage output for driving SSR that are common to all control outputs.

Index (hex)	Subindex (hex)	Object name	Default	Data range	Unit	Data type	Access	I/O allocation	Data attribute
500A	---	Heating/cooling control - Voltage Output (for driving SSR)	---	---	---	---	---	---	---
	00	Number of entries	*1	*1	---	USINT	RO	Not possible.	---
	01	Ch1 Control Period (Cooling)	2	-2 to 99	---	INT	RW	Not possible.	Y
	11	Ch2 Control Period (Cooling)	2	-2 to 99	---	INT	RW	Not possible.	Y
	21	Ch3 Control Period (Cooling)*2	2	-2 to 99	---	INT	RW	Not possible.	Y
	31	Ch3 Control Period (Cooling)*2	2	-2 to 99	---	INT	RW	Not possible.	Y

*1. The default value and data range for Number of Entries are as follows.

NX Units	Default value	Data range
NX-TC2407	31	31
NX-TC3407	63	63

*2. Not in NX-TC2 □□□.

- Refer to *Setting parameters for voltage output for driving SSR in heating/cooling control type models* on page 6-47 under *6-2 List of Settings* on page 6-33 for the function and meaning of each set value for the objects for voltage output for driving SSR in heating and cooling control.

Index (hex)	Subindex (hex)	Object name	Default	Data range	Unit	Data type	Access	I/O allocation	Data attribute
500B	---	linear current output	---	---	---	---	---	---	---
	00	Number of entries	*1	*1	---	USINT	RO	Not possible.	---
	01	Ch1 Output Signal Range	0	0/1	---	USINT	RW	Not possible.	Y
	11	Ch2 Output Signal Range	0	0/1	---	USINT	RW	Not possible.	Y
	21	Ch3 Output Signal Range*2	0	0/1	---	USINT	RW	Not possible.	Y
	31	Ch4 Output Signal Range*2	0	0/1	---	USINT	RW	Not possible.	Y

*1. The default value and data range for Number of Entries are as follows.

NX Units	Default value	Data range
NX-TC2408	31	31
NX-TC3408	63	63

*2. Not in NX-TC2 □□□.

- Refer to *Setting parameters for MV Branch* on page 6-48 under *6-2 List of Settings* on page 6-33 for the function and meaning of each set value for the objects for linear current output.

Index (hex)	Subindex (hex)	Object name	Default	Data range	Unit	Data type	Access	I/O allocation	Data attribute
500C	---	MV Branch	---	---	---	---	---	---	---
	00	Number of entries	*1	*1	---	USINT	RO	Not possible.	---
	01	Ch1 MV Branch Operation	0	0 to 7	---	USINT	RW	Not possible.	Y
	02	Ch1 MV Slope	1000	1 to 9999	0.001	INT	RW	Not possible.	N
	03	Ch1 MV Offset	0	-1999 to 9999	0.1%	INT	RW	Not possible.	N
	11	Ch2 MV Branch Operation	0	0 to 7	---	USINT	RW	Not possible.	Y
	12	Ch2 MV Slope	1000	1 to 9999	0.001	INT	RW	Not possible.	N
	13	Ch2 MV Offset	0	-1999 to 9999	0.1%	INT	RW	Not possible.	N
	21	Ch3 MV Branch Operation*2	0	0 to 7	---	USINT	RW	Not possible.	Y
	22	Ch3 MV Slope*2	1000	1 to 9999	0.001	INT	RW	Not possible.	N
	23	Ch3 MV Offset*2	0	-1999 to 9999	0.1%	INT	RW	Not possible.	N
	31	Ch4 MV Branch Operation*2	0	0 to 7	---	USINT	RW	Not possible.	Y
	32	Ch4 MV Slope*2	1000	1 to 9999	0.001	INT	RW	Not possible.	N
	33	Ch4 MV Offset*2	0	-1999 to 9999	0.1%	INT	RW	Not possible.	N

*1. The default value and data range for Number of Entries are as follows.

NX Unit	Default value	Data range
NX-TC2405/TC2406/TC2408	31	31
NX-TC3405/TC3406/TC3408	63	63

*2. Not in NX-TC2 □□□.

- Refer to *Setting parameters for MV Branch* on page 6-48 under *6-2 List of Settings* on page 6-33 for the function and meaning of each set value for the objects for MV Branch.

Index (hex)	Subindex (hex)	Object name	Default	Data range	Unit	Data type	Access	I/O allocation	Data attribute
500D	---	Heater Burnout Detection	---	---	---	---	---	---	---
	00	Number of entries	*1	*1	---	USINT	RO	Not possible.	---
	01	Ch1 Heater Burnout Detection Current	0	0 to 50	A	REAL	R/W	Not possible.	N
	02	Ch1 SSR Failure Detection Current	50	0 to 50	A	REAL	R/W	Not possible.	N
	11	Ch2 Heater Burnout Detection Current	0	0 to 50	A	REAL	R/W	Not possible.	N
	12	Ch2 SSR Failure Detection Current	50	0 to 50	A	REAL	R/W	Not possible.	N
	21	Ch3 Heater Burnout Detection Current*2	0	0 to 50	A	REAL	R/W	Not possible.	N
	22	Ch3 SSR Failure Detection Current*2	50	0 to 50	A	REAL	R/W	Not possible.	N
	31	Ch4 Heater Burnout Detection Current*2	0	0 to 50	A	REAL	R/W	Not possible.	N
	32	Ch4 SSR Failure Detection Current*2	50	0 to 50	A	REAL	R/W	Not possible.	N

*1. The default value and data range for Number of Entries are as follows.

NX Units	Default value	Data range
NX-TC2405	31	31
NX-TC3405	63	63

*2. Not in NX-TC2 □□□.

- Refer to *Heater error detection parameters* on page 6-49 under *6-2 List of Settings* on page 6-33 for the function and meaning of each set value for the objects for heater error detection.

Index (hex)	Subindex (hex)	Object name	Default	Data range	Unit	Data type	Access	I/O allocation	Data attribute
500E	---	Alarm	---	---	---	---	---	---	---
	00	Number of entries	*1	*1	---	USINT	RO	Not possible.	---
	01	Ch1 Alarm 1 Type	0	0 to 12	---	USINT	RW	Not possible.	Y
	02	Ch1 Alarm 2 Type	0	0 to 12	---	USINT	RW	Not possible.	Y
	03	Ch1 Alarm 1 Hysteresis	2	1 to 9999	0.1°C or 0.1°F	UINT	RW	Not possible.	Y
	04	Ch1 Alarm 2 Hysteresis	2	1 to 9999	0.1°C or 0.1°F	UINT	RW	Not possible.	Y
	11	Ch2 Alarm 1 Type	0	0 to 12	---	USINT	RW	Not possible.	Y
	12	Ch2 Alarm 2 Type	0	0 to 12	---	USINT	RW	Not possible.	Y
	13	Ch2 Alarm 1 Hysteresis	2	1 to 9999	0.1°C or 0.1°F	UINT	RW	Not possible.	Y
	14	Ch2 Alarm 2 Hysteresis	2	1 to 9999	0.1°C or 0.1°F	UINT	RW	Not possible.	Y
	21	Ch3 Alarm 1 Type*2	0	0 to 12	---	USINT	RW	Not possible.	Y
	22	Ch3 Alarm 2 Type*2	0	0 to 12	---	USINT	RW	Not possible.	Y
	23	Ch3 Alarm 1 Hysteresis*2	2	1 to 9999	0.1°C or 0.1°F	UINT	RW	Not possible.	Y
	24	Ch3 Alarm 2 Hysteresis*2	2	1 to 9999	0.1°C or 0.1°F	UINT	RW	Not possible.	Y
	31	Ch4 Alarm 1 Type*2	0	0 to 12	---	USINT	RW	Not possible.	Y
	32	Ch4 Alarm 2 Type*2	0	0 to 12	---	USINT	RW	Not possible.	Y
	33	Ch4 Alarm 1 Hysteresis*2	2	1 to 9999	0.1°C or 0.1°F	UINT	RW	Not possible.	Y
	34	Ch4 Alarm 2 Hysteresis*2	2	1 to 9999	0.1°C or 0.1°F	UINT	RW	Not possible.	Y

*1. The default value and data range for Number of Entries are as follows.

NX Units	Default value	Data range
NX-TC2405/TC2406/TC2407/TC2408	31	31
NX-TC3405/TC3406/TC3407/TC3408	63	63

*2. Not in NX-TC2 □□□.

- Refer to *Temperature alarms setting parameters* on page 6-50 under *6-2 List of Settings* on page 6-33 for the function and meaning of each set value for the objects for Alarm.

Index (hex)	Subindex (hex)	Object name	Default	Data range	Unit	Data type	Access	I/O allocation	Data attribute
500F	---	Maximum Number of Simultaneous Outputs	---	---	---	---	---	---	---
	00	Number of entries	*1	*1	---	USINT	RO	Not possible.	---
	01	Maximum Number of Simultaneous Outputs	0	0/1/2/3	No	USINT	RW	Not possible.	Y
	02	Delay between Outputs	10	0 to 1000	ms	UINT	RW	Not possible.	Y

*1. The default value and data range for Number of Entries are as follows.

NX Units	Default value	Data range
NX-TC2405/TC2406/TC3405/TC3406	2	2

- Refer to *Parameters for limiting simultaneous outputs* on page 6-50 under *6-2 List of Settings* on page 6-33 for the function and meaning of each set value for the objects for limiting simultaneous outputs.

A-4 CT (Current Transformer)

This section describes how to install CTs and how to calculate alarm currents.

Precautions for Safe Use

Use one of the CTs that can be connected to the Temperature Control Units. If you use any other CTs, the heater currents or leakage currents may not be accurate. This could result in failure to detect heater burnout or SSR failure. Also, if a SSR failure current is not detected, damage to equipment could result.

A-4-1 Connectable CTs

The following CTs can be connected.

Specifications

Item	Specifications			
Model number	E54-CT1	E54-CT3*1	E54-CT1L	E54-CT3L*1
Manufacturer	OMRON			
Max. continuous heater current	50 A	120 A*2	50 A	120 A*2
No. of turns	400±2 turns			
Dielectric strength	1,000 VAC (for 1 min)		1,500 VAC (1 minute)	
Vibration resistance	50 Hz, 98 m/s2			
Weight	Approx. 11.5 g	Approx. 50 g	Approx. 14 g	Approx. 57 g
Accessories	None	Armature (2), Plug (2)	None	None

*1. To meet UL Listing requirements, use the E54-CT1L or E54-CT3L Current Transformer under the condition that it is mounted at a factory of the equipment manufacturer.

*2. With the Temperature Control Units, the maximum continuous current that can flow through the heater is 50 A. Therefore, set the current that flows through the heater to 50 A or less.

Dimensions (Unit: mm)

- E54-CT1

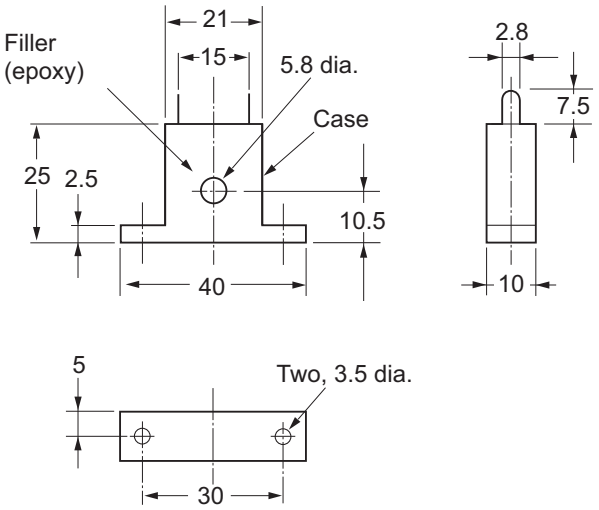

- E54-CT1L

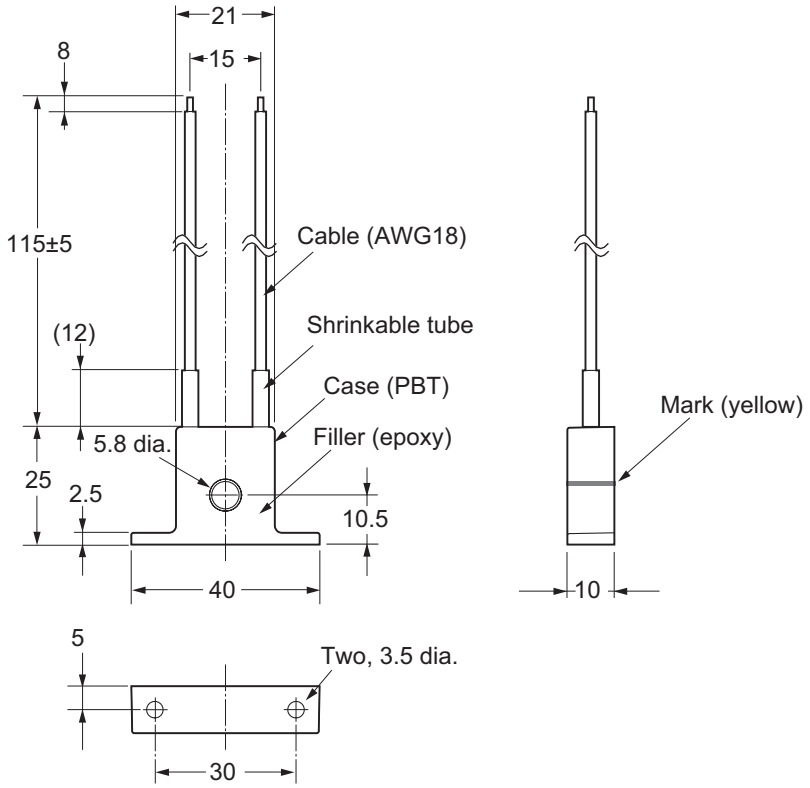

- E54-CT3

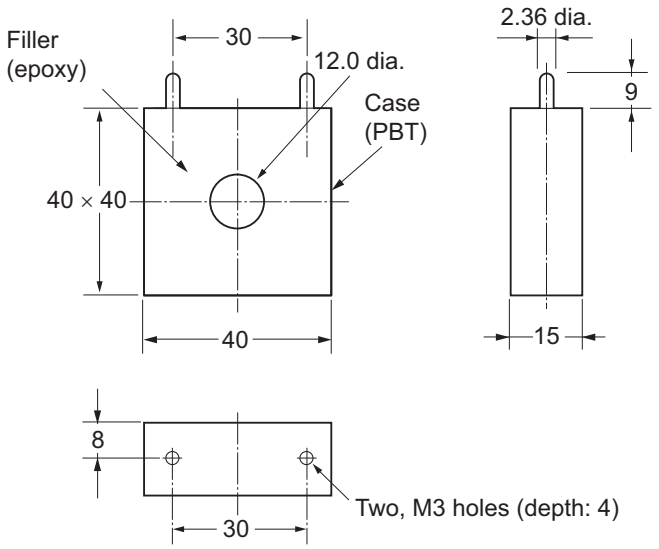

- E54-CT3L

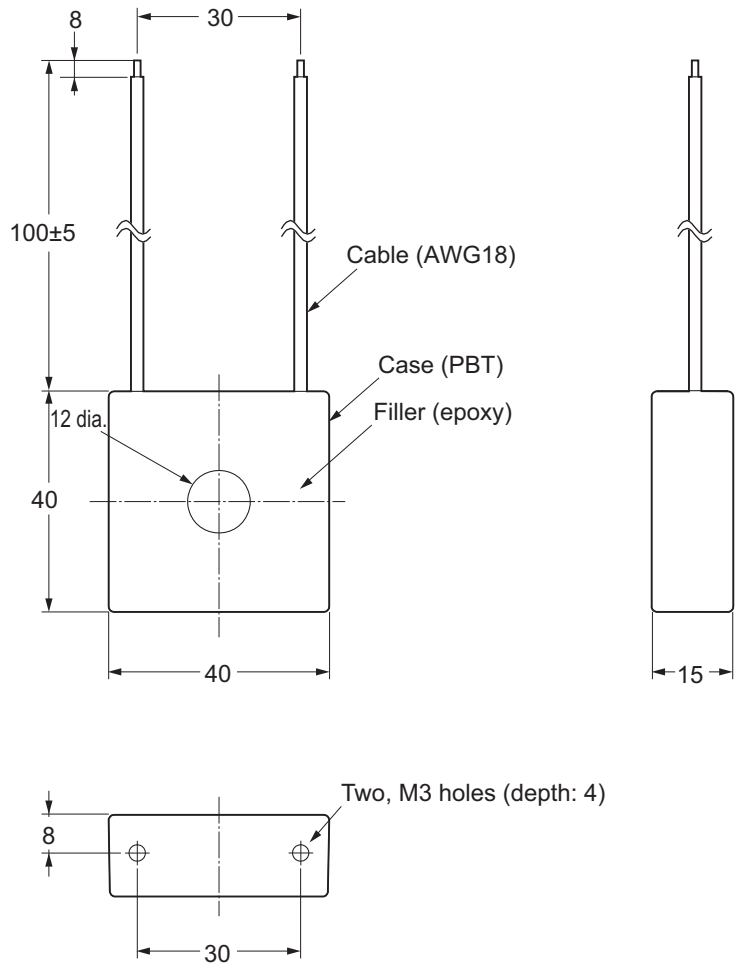

A-4-2 CT Installation Locations

Connect the CT to the CT input terminal of the Temperature Control Unit, and wire the heater power line through the opening on the CT. Install the CT in the location shown in the following figure.

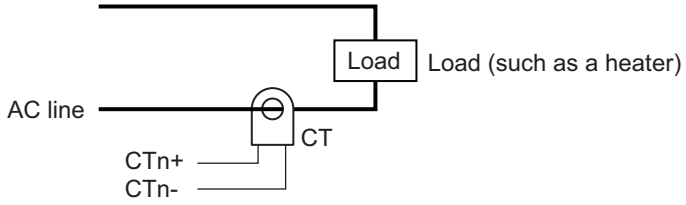

A-4-3 Calculation Methods for Heater Burnout Detection Currents and SSR Failure Detection Currents

How to Calculate Detection Currents

If you wire only one heater power line through a CT, calculate the set values using the following formulas.

$$\text{Heater burnout detection current} = \frac{\text{Normal current} + \text{Current when heater burnout occurs}}{2}$$

$$\text{SSR failure detection current} = \frac{\text{Leakage current}^{*1} + \text{Current when SSR failure occurs}}{2}$$

*1. This is the current when the SSR is OFF.

Calculate the set values of Heater burnout detection currents when you wire multiple heater power lines through a CT by using the current when the heater with the smallest current burns out, as indicated in the following formula. If all currents are the same when heater burnout occurs, use the value for when one heater burns out.

$$\text{Heater burnout detection current} = \frac{\text{Normal heater current} + \text{Heater current when the heater that has the smallest current burns out}}{2}$$

If you wire multiple heater power lines through a CT, the total of the heater currents must be 50 A or less.

Conditions for Stable Detection

If the difference between the current in normal operation and the current when an abnormality occurs is small, detection may become unstable. To enable stable detection, make sure the following conditions are met.

Heater current	Condition for stable burnout detection	Condition for stable SSR failure detection
Less than 10.0 A	Normal current - Current when heater burnout occurs ≥ 1 A	Current when SSR failure occurs - Leakage current ≥ 1 A
10.0 A min. or more	Normal current - Current when heater burnout occurs ≥ 2.5 A	Current when SSR failure occurs - Leakage current ≥ 2.5 A

If the heater current is not large enough to meet the above conditions, wind the heater power line through the CT hole multiple times, as shown in the following figure.

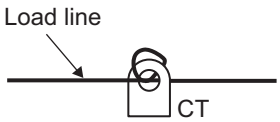

If you wind a heater power line through the CT hole multiple times, calculate the Heater burnout detection current using the following formula.

$$\text{Heater burnout detection current} = \frac{(\text{Normal current} + \text{Current when heater burnout occurs}) \times \text{No. of turns through CT}}{2}$$

One turn of the heater power line doubles the heater burnout detection current.

If you wind a heater power line through a CT hole multiple times, adjust the number of turns so that the normal current is 50 A or less.

Examples of Calculating Heater Burnout Detection Currents

This section provides examples of calculating heater burnout detection currents.

● Single-phase Heaters

A calculation example is given below for a 200-VAC, 1-kW heater.

Status	Heater current
Normal	The heater current is 5 A. 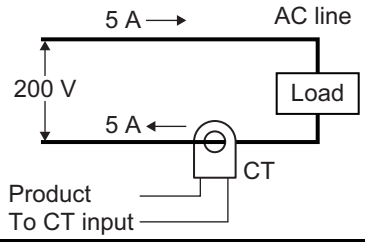

Status	Heater current
Burnout	The heater current is 0 A. 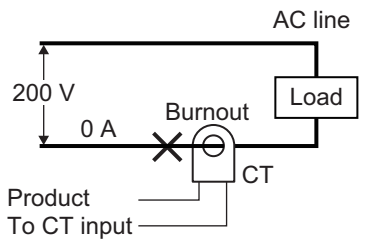

The heater current is 5 A at normal operation, and it is 0 A when the heater burnout occurs, so the heater burnout detection current is calculated as follows:

$$\text{Heater burnout detection current} = \frac{\text{Normal current + Heater burnout current}}{2}$$

$$= \frac{5 + 0}{2} = 2.5\ [\text{A}]$$

● Three-phase Heaters

A calculation example is given below for three 200-VAC, 1-kW heaters.

Status	During heater current burnout
Normal	The heater current is 15 A. 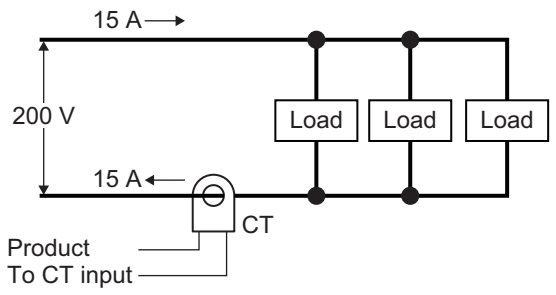
Burnout	The heater current is 10 A. 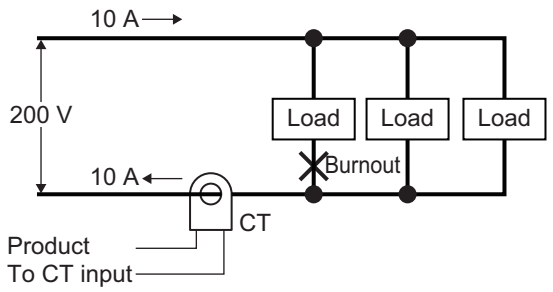

The heater current is 15 A at normal operation, and it is 10 A when the heater burnout occurs, so the heater burnout detection current is calculated as follows:

$$\text{Heater burnout detection current} = \frac{\text{Normal current + Heater burnout current}}{2}$$

$$= \frac{15 + 10}{2} = 12.5\ [\text{A}]$$

A-5 Sample programming

This section describes the assumed sample programming when a Temperature Control Unit is used.

The sample programs to be described are shown in the table below.

Sample program name	remarks
Standby sequence alarm	---
Tuning parameter backup Part 1	When using AT or automatic filter adjustment
Tuning parameter backup Part 2	When using the water-cooling output adjustment function or adaptive control
Inheriting the MV when switching to Manual Mode	---
IO data tuning parameter update	Can be used in a Temperature Control Unit with unit version 1.1 or later.

The sample programs assume the system configuration where the Temperature Control Unit is connected to the EtherCAT Slave Terminal.

Items common to all sample programs are described first, followed by details about each sample program.

As for the usage example when a Temperature Control Unit is connected to an NX-series NX1P2 CPU Unit, refer to *A-5-7 When the Temperature Control Unit is Connected to a CPU Unit* on page A-117.

A-5-1 Items Common to Each Sample Program

This section describes the contents common to each sample program.

System configuration

The system configuration is given below.

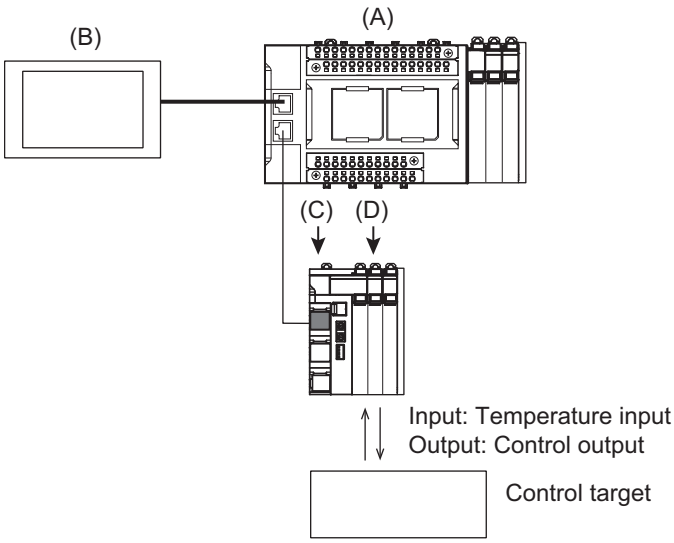

Letter	Description	Model	Remarks
(A)	Controller and EtherCAT Master	NX1P2-9024DT	---
(B)	Touch panel	---	For details, refer to *Touch Panel Specifications* on page A-93.
(C)	EtherCAT Coupler Unit	NX-ECC201	Node address: 1
(D)	Temperature Control Units	NX-TC2405 *1	• NX Unit number: 1 • Channel used: Ch1

*1. NX-TC2407 is used for the program of tuning parameter backup part 2

Touch Panel Specifications

The following sample programs can be run only when the touch panel is connected to the controller.

- Tuning parameter backup Part 2
- Inheriting the MV when switching to Manual Mode

The following I/O information is handled through the touch panel.

Input/Output	information
Inputs	Unit Parameter Save Command*1 Manual MV*2
Output	Manual MV Editable Flag*2

*1. Used in the program of tuning parameter backup part 2.

*2. Used in the program for inheriting the MV when switching to Manual Mode.

Unit operation settings

This section describes the Unit operation settings of the Temperature Control Unit that are common to each sample program.

Item	Set value	Meaning of setting
Ch1 Enable/Disable	TRUE	Enable
Ch2 Enable/Disable	FALSE	Disable
Ch1 PID ON/OFF	2-PID	2-PID control

Functions of the Temperature Control Unit used in each sample program are described below. The settings must be configured to ensure that the execution conditions of each function are satisfied. Check the reference section for details on the execution conditions.

Sample programming	Function	Reference
Standby sequence alarm	---	Only the settings specified in the table above constitute the execution conditions.
Tuning parameter backup Part 1	AT	*7-5-1 Autotuning (AT)* on page 7-57
	Automatic Filter Adjustment	*7-5-2 Automatic Filter Adjustment* on page 7-60
Tuning parameter backup Part 2	Water Cooling Output Adjustment	• *7-5-3 Water Cooling Output Adjustment Function* on page 7-66 • *7-5-5 Notifying the Update of Tuning Parameters* on page 7-85
	Adaptive Control	• *7-5-4 Adaptive control* on page 7-71 • *7-5-5 Notifying the Update of Tuning Parameters* on page 7-85
Inheriting the MV when switching to Manual Mode	manual MV	*7-4-6 Manual MV* on page 7-40 Only the settings specified in the table above constitute the execution conditions.
I/O data tuning parameter update	AT	*7-5-1 Autotuning (AT)* on page 7-57
	Automatic filter	*7-5-2 Automatic Filter Adjustment* on page 7-60

Programs Used in Common

This section describes a part of the sample program that determines whether communications is possible or not. The program section is commonly used in all sample programs.

Because it is used as the determiner of communications possibility, this program section is written in the beginning of each sample program. The description of this program is omitted in the explanation of each sample program.

● I/O Map

The following table shows the settings of variables that are assigned to the I/O Map on the Sysmac Studio.

I/O port name	Variable name	Description	Data type	Variable Type
NX_Unit_Message_Enabled_Status_125	E001_NX-_Unit_Message_Enabled_Status_125[1]	NX Unit (Unit1) Message Communications Enable	ARRAY[0..125] OF BOOL	Global Variable
NX_Unit_I_O_-Data_Active_Status_125	E001_NX-_Unit_I_O_-Data_Active_Status_125[1]	NX Unit (Unit1) I/O Communications Enabled	ARRAY[0..125] OF BOOL	Global Variable

● External variables

The external variables used in the program are described below.

Use the global variable table and system-defined variables shown below as the external variables.

a) Global variable table

Variable name*1	Data types	Default value	AT	Retain	Networks Publish	Description
E001_NX-_Unit_Message_Enabled_Status_125[1]	ARRAY[0..125] OF BOOL	FALSE	ECAT://node#1/NX Unit Message Enabled Status 125	FALSE	Do not publish.	NX Unit (Unit1) Message Communications Enabled
E001_NX-_Unit_I_O_-Data_Active_Status_125[1]	ARRAY[0..125] OF BOOL	FALSE	ECAT://node#1/NX Unit I/O Data Active Status 125	FALSE	Do not publish.	NX Unit (Unit1) I/O Communications Enabled
TC01_Mes_is_Ready	BOOL	FALSE	---	FALSE	Do not publish.	Message communications possible.
TC01_IO_is_Ready	BOOL	FALSE	---	FALSE	Do not publish.	I/O Communications Enabled

*1. Variables starting with "TC01" are for a Temperature Control Unit whose device name is defined as "TC01".

b) System-defined variables

Variable name	Description	Data type
_EC_PDSlavTbl[1]	EtherCAT Process Data Communicating Slave Table (Node1)	ARRAY[1..192] OF BOOL
_EC_CommErrTbl[1]	EtherCAT Communications Error Slave Table (Node1)	ARRAY[1..192] OF BOOL

● Internal variables

There are no internal variables used in the program.

● Ladder Programming

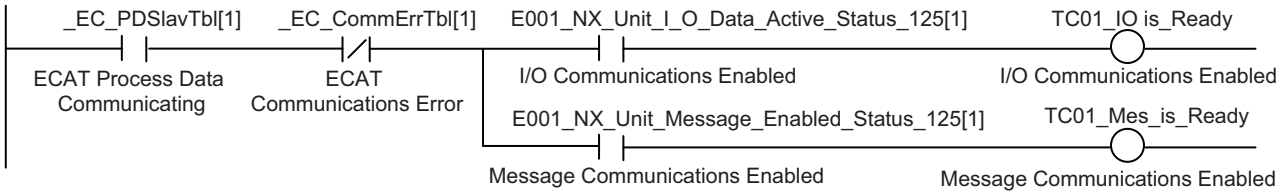

● ST Programming

```
// Initialization of variable
TC01_IO_is_Ready:= FALSE;                    //I/O Communications Not Possible
TC01_Mes_is_Ready:= FALSE;                   // Message Communications Not Possible

// ECAT Process Data Communicating, and No ECAT Communications Error
IF (_EC_PDSlavTbl[1] = TRUE) AND (_EC_CommErrTbl[1] = FALSE) THEN
        // I/O Communications Enabled
        IF (E001_NX_Unit_I_O_Data_Active_Status_125[1] = TRUE) THEN
                   TC01_IO_is_Ready := TRUE;// I/O Communications Enabled
        END_IF;
        // Message Communications Enabled
        IF (E001_NX_Unit_Message_Enabled_Status_125[1] = TRUE) THEN
                   TC01_Mes_is_Ready := TRUE;// Message Communications Enabled
        END_IF;
END_IF;
```

A-5-2 Standby Sequence Alarm

This section describes the program of the standby sequence alarm.

Use the "Upper/Lower Deviation Alarm with Standby Sequence Group" analog control instruction of the alarm. The program below describes resetting the standby sequence alarm by changing the *Enable* variable to FALSE (Reset alarm) when the power is turned ON, when control is started, or else when the set point is changed. For details on Upper/Lower Deviation Alarm with Standby Sequence Group, refer to *NJ/NX-series Instructions Reference Manual* (Cat. No. W502).

I/O Map

The following table shows the settings of variables that are assigned to the I/O Map on the Sysmac Studio.

I/O port name	Variable name*1	Description	Data type	Variable Type
Ch1 RUN or STOP	TC01_Ch1_RUN_or_STOP	Ch1 RUN or STOP FALSE: Run TRUE: Stop	BOOL	Global Variable
Ch1 Set Point REAL	TC01_Ch1_Set_Point_REAL	Ch1 Set Point (REAL)	REAL	Global Variable
Ch1 Measured Value REAL	TC01_Ch1_Measured_Value_REAL	Ch1 Measured Value (REAL)	REAL	Global Variable

*1. Variables starting with "TC01" are for a Temperature Control Unit whose device name is defined as "TC01".

Variable Table

The external variables and internal variables used in the program are described below.

● External variables

Use the global variable table shown below as the external variables.

Variable name*1*2*3	Data types	Default value	AT	Retain	Network Publish	Description
TC01_Ch1_RUN_or_STOP	BOOL	FALSE	ECAT://node#[1,1]/Ch1 Operation Command/Ch1 RUN or STOP	FALSE	Do not publish.	Ch1 RUN or STOP FALSE: Run TRUE: Stop
TC01_Ch1_Set_Point_REAL	REAL	0	ECAT://node#[1,1]/Ch1 Set Point REAL	FALSE	Do not publish.	Ch1 Set Point (REAL)
TC01_Ch1_Measured_Value_REAL	REAL	0	ECAT://node#[1,1]/Ch1 Measured Value REAL	FALSE	Do not publish.	Ch1 Measured Value REAL
TC01_Mes_is_Ready	BOOL	FALSE	---	FALSE	Do not publish.	Message communications possible.
TC01_IO_is_Ready	BOOL	FALSE	---	FALSE	Do not publish.	I/O Communications Enabled
PTI_Ch1_Run	BOOL	FALSE	---	TRUE	Publish Only	Ch1 Run This variable is instructed by the user.
PTI_Ch1_Set_Point	REAL	0	---	TRUE	Publish Only	Ch1 Set Point This variable is set by the user.

Variable name*1*2*3	Data types	Default value	AT	Retain	Network Publish	Description
PTI_Ch1_Upper_Limit_Value	REAL	0	---	TRUE	Publish Only	Set value for an alarm for an upward deviation in respect to the reference value This variable is set by the user.
PTI_Ch1_Lower_Limit_Value	REAL	0	---	TRUE	Publish Only	Set value for an alarm for a downward deviation in respect to the reference value This variable is set by the user.
PTI_Ch1_Hysterisis_Value	REAL	0	---	TRUE	Publish Only	Hysteresis of the alarm This variable is set by the user.
PTO_Ch1_Alarm	BOOL	FALSE	---	FALSE	Publish Only	Deviation alarm output FALSE: There is neither an upper deviation alarm nor a lower deviation alarm. TRUE: There is either an upper deviation alarm or a lower deviation alarm.
PTO_Ch1_Upper_Limit_Alarm	BOOL	FALSE	---	FALSE	Publish Only	Upper deviation alarm FALSE: There is no upper deviation alarm. TRUE: There is an upper deviation alarm.
PTO_Ch1_Lower_Limit_Alarm	BOOL	FALSE	---	FALSE	Publish Only	Lower deviation alarm FALSE: There is no lower deviation alarm. TRUE: There is a lower deviation alarm.
PTO_Ch1_Stby_Seq_Flag	BOOL	FALSE	---	TRUE	Publish Only	Standby Sequence Enabled Flag FALSE: Disabled TRUE: Enabled

*1. Variables starting with "TC01" are for a Temperature Control Unit whose device name is defined as "TC01".

*2. Variables starting with "PTI" are defined as the input of the touch panel.

*3. Variables starting with "PTO" are defined as the output of the touch panel.

● Internal variables

Variable name	Description	Default	Data types
Ch1_Run_previous_value	Ch1 Run Previous Value	FALSE	BOOL
Ch1_Set_Point_previous_value	Ch1 Set Point (REAL) Previous Value	0	REAL
Ch1_Set_Point_Change_Valid	Ch1 Set Point (REAL) Change Status FALSE: No change TRUE: Change present	FALSE	BOOL
error0	Instruction execution error flag FALSE: No error occurred. TRUE: An error occurred.	FALSE	BOOL
LimitAlarmDvStbySeq_REAL_instance	Instance for Upper/Lower Deviation Alarm with Standby Sequence Group instruction	---	LimitAlarmDvStby-Seq_REAL

Ladder Programming

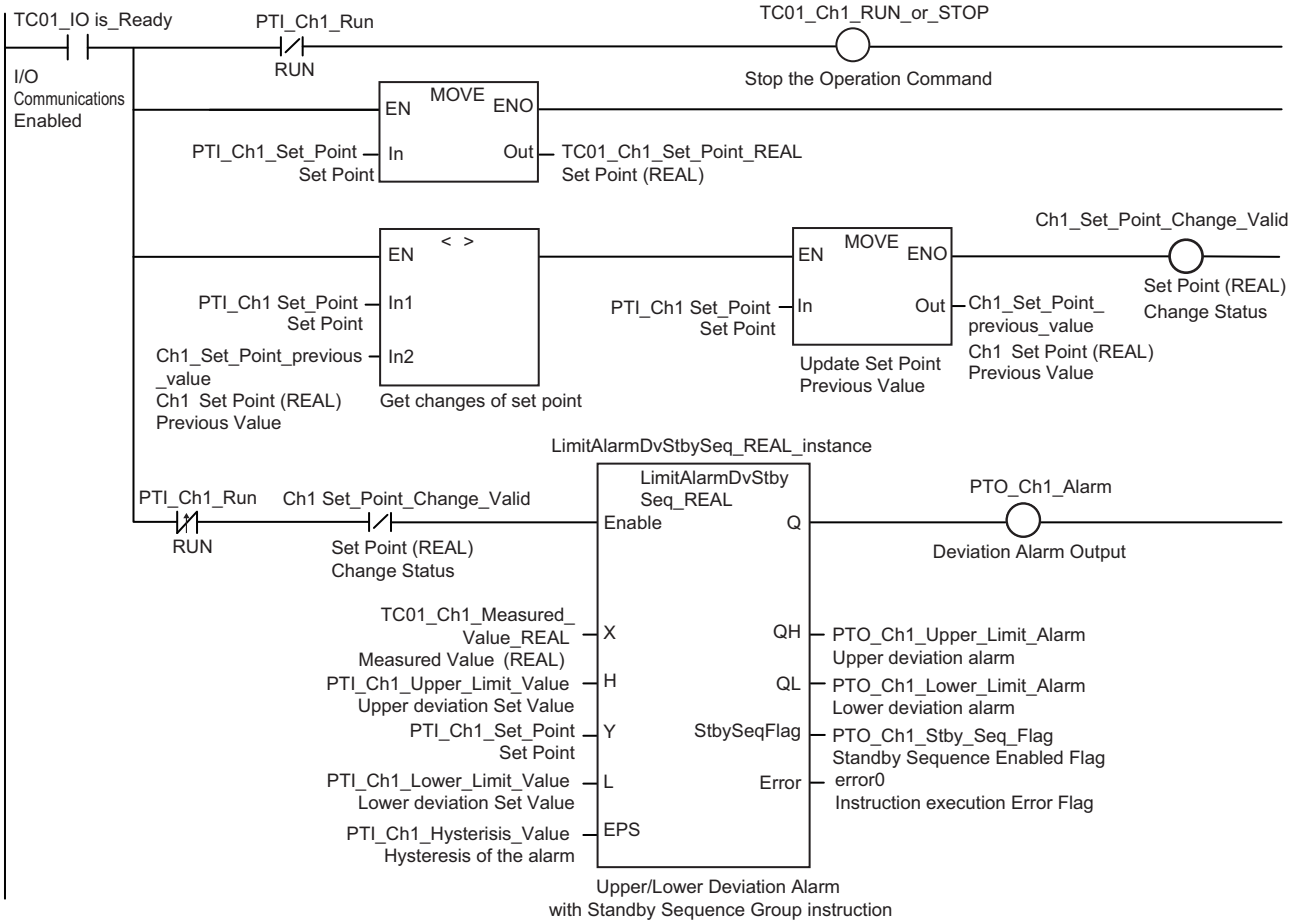

ST Programming

```
// Initialization of variable
TC01_Ch1_RUN_or_STOP := FALSE; // Operation Command: Run/Stop = Run
Ch1_Set_Point_Change_Valid := FALSE; // Ch1 Set Point (REAL) No Change
PTO_Ch1_Alarm := FALSE; // Alarm Output: FALSE

// I/O Communications Enabled
IF (TC01_IO_is_Ready = TRUE) THEN
    // If not RUN, Operation Command: Run/Stop = Stop
    IF (PTI_Ch1_Run = FALSE) THEN
                TC01_Ch1_RUN_or_STOP := TRUE;
    END_IF;
    // Get Set Point
    TC01_Ch1_Set_Point_REAL := PTI_Ch1_Set_Point;
    // Update Set Point Previous Value if Set Point Changes
    IF (PTI_Ch1_Set_Point <> Ch1_Set_Point_previous_value) THEN
        Ch1_Set_Point_previous_value := PTI_Ch1_Set_Point;
        Ch1_Set_Point_previous_Change_Valid := TRUE;
    END_IF;
    // Reset alarm when the operation changes from Stop to Run, or when the Set
    Point changes
    IF (((Ch1_Run_previous_value = FALSE) AND (PTI_Ch1_Run = TRUE)) OR
    (Ch1_Set_Point_previous_Change_Valid = TRUE)) THEN
        // Upper/Lower Deviation Alarm with Standby Sequence Group instruction
        LimitAlarmDvStbySeq_REAL_instance (
                Enable := FALSE );
    ELSE
        // Upper/Lower Deviation Alarm with Standby Sequence Group instruction
        LimitAlarmDvStbySeq_REAL_instance (
                    Enable := TRUE,
                    X := TC01_Ch1_Measured_Value_REAL,
                    H := PTI_Ch1_Upper_Limit_Value,
                    Y := PTI_Ch1_Set_Point,
                    L := PTI_Ch1_Lower_Limit_Value,
                    EPS := PTI_Ch1_Hysterisis_Value,
                    QH => PTO_Ch1_Upper_Limit_Alarm,
                    QL => PTO_Ch1_Lower_Limit_Alarm,
                    StbySeqFlag => PTO_Ch1_Stby_Seq_Flag,
                    Error => error0 );
    END_IF;
    // Alarm Output when alarm is ON: TRUE
    IF (LimitAlarmDvStbySeq_REAL_instance.Q = TRUE) THEN
                PTO_Ch1_Alarm := TRUE;
    END_IF;
END_IF;

// Update Previous Value
Ch1_Run_previous_value := PTI_Ch1_Run;
```

A-5-3 Tuning Parameter Backup Part 1

This section describes the program used to backup the tuning parameters calculated by AT and Automatic Filter Adjustment. This program is necessary when tuning parameters are to be inherited during Unit replacement. Use the "Save NX Unit Parameters" system control instruction. The program below describes backing up the tuning parameters by detecting downward differentiation of the "100 Percent AT Status", "40 Percent AT Status", and "Automatic Filter Adjustment" bits of the "Ch1 Operating Status" of I/O data when AT and Automatic Filter Auto Adjustment are executed. For details on "Save NX Unit Parameters", refer to *NJ/NX-series Instructions Reference Manual* (Cat. No. W502).

I/O Map

The following table shows the settings of variables that are assigned to the I/O Map on the Sysmac Studio.

I/O port name	Variable name*1	Description	Data type	Variable Type
Ch1 100 Percent AT Status	TC01_Ch1_100_Percent_AT_Status	Ch1 100% AT Execution Status	BOOL	Global Variable
Ch1 40 Percent AT Status	TC01_Ch1_40_Percent_AT_Status	Ch1 40% AT Execution Status	BOOL	Global Variable
Ch1Automatic Filter Adjustment Status	TC01_Ch1_Automatic_Filter_Adjustment_Status	Ch1 Automatic Filter Adjustment Execution Status	BOOL	Global Variable

*1. Variables starting with "TC01" are for a Temperature Control Unit whose device name is defined as "TC01".

Variable Table

The external variables and internal variables used in the program are described below.

● External variables

Use the global variable table shown below as the external variables.

Variable name*1	Data types	Default value	AT	Retain	Network Publish	Description
TC01_Ch1_100_Percent_AT_Status	BOOL	FALSE	ECAT://node#[1,1]/Ch1 Operating Status/Ch1 100 Percent AT Status	FALSE	Do not publish.	Ch1 100% AT Execution Status
TC01_Ch1_40_Percent_AT_Status	BOOL	FALSE	ECAT://node#[1,1]/Ch1 Operating Status/Ch1 40 Percent AT Status	FALSE	Do not publish.	Ch1 40% AT Execution Status
TC01_Ch1_Automatic_Filter_Adjustment_Status	BOOL	FALSE	ECAT://node#[1,1]/Ch1 Operating Status/Ch1 Automatic Filter Adjustment Status	FALSE	Do not publish.	Ch1 Automatic Filter Adjustment Execution Status
TC01_Mes_is_Ready	BOOL	FALSE	---	FALSE	Do not publish.	Message communications possible.
TC01_IO_is_Ready	BOOL	FALSE	---	FALSE	Do not publish.	I/O Communications Enabled
TC01	_sNX-UNIT_ID	---	---	FALSE	Do not publish.	Temperature Control Units*2

Variable name*1	Data types	Default value	AT	Retain	Network Publish	Description
Save_Busy-_Tune	BOOL	FALSE	---	FALSE	Do not publish.	Hold Busy
Save_Er-ror_Tune	BOOL	FALSE	---	FALSE	Do not publish.	Hold Error
Save_Error-ID_Tune	WORD	0	---	FALSE	Do not publish.	Hold Error ID
Save_ErrorI-DEx_Tune	DWORD	0	---	FALSE	Do not publish.	Hold ErrorIDEx
Save_-Done_Tune	BOOL	FALSE	---	FALSE	Do not publish.	Execution result flag for Save NX Unit Parameters instruction FALSE: Not Executed, Error End TRUE: Normal Execution

*1. Variables starting with "TC01" are for a Temperature Control Unit whose device name is defined as "TC01".

*2. For details on the method of allocating variables to the Unit, refer to *NJ/NX-series CPU Unit Software User's Manual* (Cat. No. W501).

● Internal variables

Variable name	Description	Default	Data types
Ch1_100_Per-cent_AT_Status_previ-ous_value	Ch1 100% AT Execution Status Previous Value	FALSE	BOOL
Ch1_40_Percent_AT_Sta-tus_previous_value	Ch1 40% AT Execution Status Previous Value	FALSE	BOOL
Ch1_Automatic_Filter_Ad-justment_Status_previ-ous_value	Ch1 Automatic Filter Adjustment Execution Sta-tus Previous Value	FALSE	BOOL
SaveParam_Tune	Instance for Save NX Unit Parameters instruction for tuning	---	NX_SaveParam

Ladder Programming

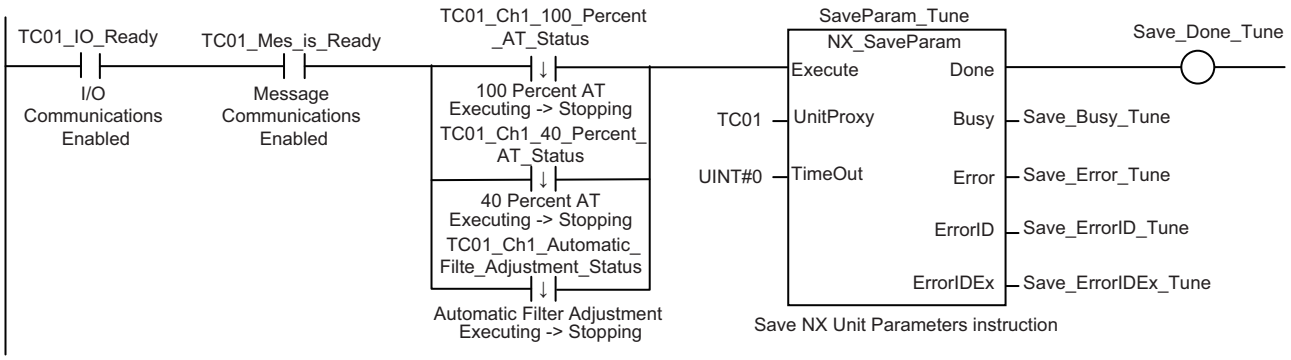

ST Programming

```
// When I/O Communication is Enabled, and Message Communication is Enabled, and
// the execution status of either 100% AT, 40% AT, or automatic filter adjustment
// changes from executing to stopping,
IF (TC01_IO_is_Ready = TRUE) AND (TC01_Mes_is_Ready = TRUE) AND
     (  (Ch1_100_Percent_AT_Status_previous_value = TRUE) AND
        (TC01_Ch1_100_Percent_AT_Status = FALSE)) OR
        ((Ch1_40_Percent_AT_Status_previous_value = TRUE) AND
        (TC01_Ch1_40_Percent_AT_Status = FALSE)) OR
        ((Ch1_Automatic_Filter_Adjustment_Status_previous_value = TRUE) AND
(TC01_Ch1_Automatic_Filter_Adjustment_Status = FALSE)) ) THEN
    // Save NX Unit Parameters instruction
    SaveParam_Tune(
        Execute := TRUE,
        UnitProxy := TC01,
        TimeOut := UINT#0,
        Busy => Save_Busy_Tune,
        Error => Save_Error_Tune,
        ErrorId => Save_ErrorID_Tune,
        ErrorIDEx => Save_ErrorIDEx_Tune );
ELSE
    // Save NX Unit Parameters instruction
    SaveParam_Tune(
        Execute := FALSE,
        UnitProxy := TC01 );
END_IF;

// Hold the execution result of Save NX Unit Parameters instruction.
IF (SaveParam_Tune.Done = TRUE) THEN
        Save_Done_Tune := TRUE;
ELSE
        Save_Done_Tune := FALSE;
END_IF;

// Update Previous Value
Ch1_100_Percent_AT_Status_previous_value := TC01_Ch1_100_Percent_AT_Status;
Ch1_40_Percent_AT_Status_previous_value := TC01_Ch1_40_Percent_AT_Status;
Ch1_Automatic_Filter_Adjustment_Status_previous_value :=
TC01_Ch1_Automatic_Filter_Adjustment_Status;
```

A-5-4 Tuning Parameter Backup Part 2

This section describes the program used to backup the tuning parameters calculated by the water-cooling output adjustment function and adaptive control. This program is necessary when tuning parameters are to be inherited during Unit replacement. Use the "Save NX Unit Parameters" system control instruction. The program below describes backing up the tuning parameters when the following conditions are satisfied if the water-cooling output adjustment function and adaptive control are executed.

- The "Tuning Parameter Updated" bit of the "Ch1 Operating Status" of I/O data is "TRUE"
- The Unit Parameter Save Command of the external devices (touch panel, switch, etc.) is "TRUE".

For details on "Save NX Unit Parameters", refer to *NJ/NX-series Instructions Reference Manual* (Cat. No. W502).

I/O Map

The following table shows the settings of variables that are assigned to the I/O Map on the Sysmac Studio.

I/O port name	Variable name*1	Description	Data type	Variable Type
Ch1 Tuning Parameter Updated	TC01_Ch1_Tuning_Parameter_Updated	Ch1 Tuning Parameter Update Status FALSE: Tuning Parameters Not Updated TRUE: Tuning Parameters Updated	BOOL	Global Variable

*1. Variables starting with "TC01" are for a Temperature Control Unit whose device name is defined as "TC01".

Variable Table

The external variables and internal variables used in the program are described below.

● External variables

Use the global variable table shown below as the external variables.

Variable name*1*2	Data types	Default value	AT	Retain	Network Publish	Description
TC01_Ch1_Tuning_Parameter_Updated	BOOL	FALSE	ECAT://node#[1,1]/Ch1 Operating Status/Ch1 Tuning Parameter Updated	FALSE	Do not publish.	Ch1 Tuning Parameter Update Status FALSE: Tuning Parameters Not Updated TRUE: Tuning Parameters Updated
TC01_Mes_is_Ready	BOOL	FALSE	---	FALSE	Do not publish.	Message communications possible.
TC01_IO_is_Ready	BOOL	FALSE	---	FALSE	Do not publish.	I/O Communications Enabled
TC01	_sNX-UNIT_ID	---	---	FALSE	Do not publish.	Temperature Control Units*3
Save_Busy_Tune	BOOL	FALSE	---	FALSE	Do not publish.	Hold Busy
Save_Error_Tune	BOOL	FALSE	---	FALSE	Do not publish.	Hold Error

Variable name*1*2	Data types	Default value	AT	Retain	Net-work Publish	Description
Save_Error-ID_Tune	WORD	0	---	FALSE	Do not publish.	Hold Error ID
Save_ErrorI-DEx_Tune	DWORD	0	---	FALSE	Do not publish.	Hold ErrorIDEx
Save_-Done_Tune	BOOL	FALSE	---	FALSE	Do not publish.	Execution result flag for Save NX Unit Parameters instruc-tion FALSE: Not Executed, Error End TRUE: Normal Execution
PTI_Ex-ecSavePa-ram	BOOL	FALSE	---	FALSE	Publish Only	Unit Parameter Save Com-mand This variable is instructed by the user from the touch panel.

*1. Variables starting with "TC01" are for a Temperature Control Unit whose device name is defined as "TC01".

*2. Variables starting with "PTI" are defined as the input of the touch panel.

*3. For details on the method of allocating variables to the Unit, refer to *NJ/ NX-series CPU Unit Software User's Manual* (Cat. No. W501).

● Internal variables

Variable name	Description	Default	Data types
SaveParam_Tune	Instance for Save NX Unit Parameters instruction for tuning	---	NX_SaveParam

Ladder Programming

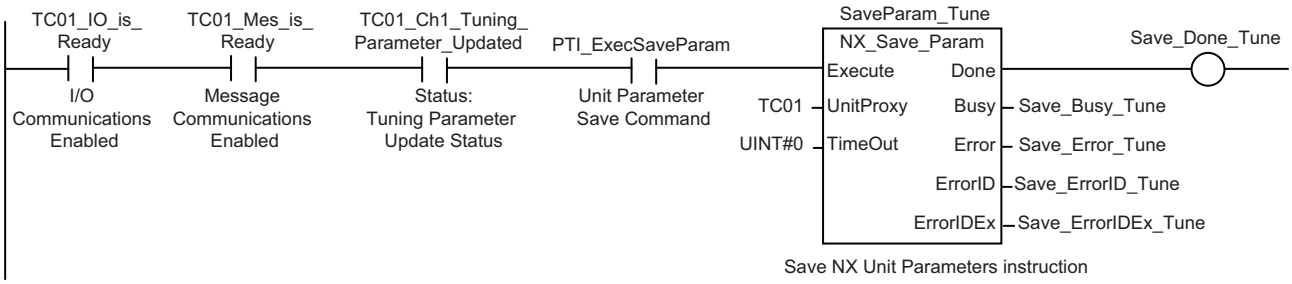

ST Programming

```
// When I/O Communications is Enabled, and Message Communications is Enabled, and
// Tuning Parameters are Updated, and Unit Parameter Save Command is issued
IF (TC01_IO_is_Ready = TRUE) AND (TC01_Mes_is_Ready = TRUE) AND
(TC01_Ch1_Tuning_Parameter_Updated = TRUE) AND (PTI_ExecSaveParam = TRUE) THEN
        // Save NX Unit Parameters instruction
        SaveParam_Tune(
            Execute := TRUE,
            UnitProxy := TC01,
            TimeOut := UINT#0,
            Busy => Save_Busy_Tune,
            Error => Save_Error_Tune,
            ErrorId => Save_ErrorID_Tune,
            ErrorIDEx => Save_ErrorIDEx_Tune );
ELSE
        // Save NX Unit Parameters instruction
        SaveParam_Tune(
            Execute := FALSE,
            UnitProxy := TC01 );
END_IF;

// Hold the execution result of Save NX Unit Parameters instruction.
IF (SaveParam_Tune.Done = TRUE) THEN
        Save_Done_Tune := TRUE;
ELSE
        Save_Done_Tune := FALSE;
END_IF;
```

A-5-5 Inheriting the MV when Switching to Manual Mode

This section describes the program used for inheriting the last MV of Auto Mode as the initial value of the manual MV when switching from Auto Mode to Manual mode. This program is necessary to avoid sudden change in the MV.

In the Auto Mode, set the "Ch1 Reflect Manual MV" operation command to "FALSE: Do not reflect", and set the "Ch1 Manual MV" on the touch panel to the not-editable state. If you switch to Manual Mode on the touch panel, the operation command of Manual Mode is issued. After ensuring from the status variable that the Temperature Control Unit is running in Manual Mode, reflect "Ch1 MV Monitor (Heating) (REAL)" of I/O data to "Ch1 Manual MV (REAL)" of I/O data. Thereafter, change the "Reflect Manual MV" operation command to "TRUE: Reflect", and set the "Ch1 Manual MV" on the touch panel to the editable state.

I/O Map

The following table shows the settings of variables that are assigned to the I/O Map on the Sysmac Studio.

I/O port name	Variable name *1	Description	Data type	Variable Type
Ch1 Reflect Manual MV	TC01_Ch1_Reflect_Manual_MV	Ch1 Reflect Manual MV (operation command) FALSE: Do Not Reflect TRUE: Reflect	BOOL	Global Variable
Ch1 Auto or Manual	TC01_Ch1_Auto_or_Manual	Ch1 Auto or Manual (operation command) FALSE: Automatic TRUE: Manual	BOOL	Global Variable
Ch1 Auto or Manual Status	TC01_Ch1_Auto_or_Manual_Status	Ch1 Auto or Manual (Status) FALSE: Automatic TRUE: Manual	BOOL	Global Variable
Ch1 MV Monitor Heating REAL	TC01_Ch1_MV_-Monitor_Heating_-REAL	Ch1 MV Monitor (Heating) (REAL)	REAL	Global Variable
Ch1 Manual MV REAL	TC01_Ch1_Manual_MV_REAL	Ch1 Manual MV REAL	REAL	Global Variable
Ch1 Reflect Manual MV Status	TC01_Reflect_Manual_MV_Status	Ch1 Reflect Manual MV (Status) FALSE: Not reflected TRUE: Reflected	BOOL	Global Variable

*1. Variables starting with "TC01" are for a Temperature Control Unit whose device name is defined as "TC01".

Variable Table

The external variables and internal variables used in the program are described below.

External variables

Use the global variable table shown below as the external variables.

Variable name*1*2*3	Data types	Default value	AT	Retain	Network Publish	Description
TC01_Ch1_Reflect_Manual_MV	BOOL	FALSE	ECAT://node#[1,1]/Ch1 Operation Command/Ch1 Reflect Manual MV	FALSE	Do not publish.	Ch1 Reflect Manual MV (operation command) FALSE: Do Not Reflect TRUE: Reflect
TC01_Ch1_Auto_or_Manual	BOOL	FALSE	ECAT://node#[1,1]/Ch1 Operation Command/Ch1 Auto or Manual	FALSE	Do not publish.	Ch1 Auto or Manual (operation command) FALSE: Automatic TRUE: Manual
TC01_Ch1_Auto_or_Manual_Status	BOOL	FALSE	ECAT://node#[1,1]/Ch1 Operating Status/Ch1 Auto or Manual Status	FALSE	Do not publish.	Ch1 Auto or Manual (Status) FALSE: Automatic TRUE: Manual
TC01_Ch1_MV_Monitor_Heating_-REAL	REAL	0	ECAT://node#[1,1]/Ch1 MV Monitor Heating REAL	FALSE	Do not publish.	Ch1 MV Monitor (Heating) (REAL)
TC01_Ch1_Manual_MV_-REAL	REAL	0	ECAT://node#[1,1]/Ch1 Manual MV REAL	FALSE	Do not publish.	Ch1 Manual MV REAL
TC01_Ch1_Reflect_Manual_MV_Status	BOOL	FALSE	ECAT://node#[1,1]/Ch1 Operating Status/Ch1 Reflect Manual MV Status	FALSE	Do not publish.	Ch1 Reflect Manual MV (Status) FALSE: Not reflected TRUE: Reflected
PTO_EnableMV	BOOL	FALSE	---	FALSE	Publish Only	Manual MV Editable Flag FALSE: Editing Not Possible TRUE: Editing Possible
TC01_IO_is_Ready	BOOL	FALSE	---	FALSE	Do not publish.	I/O Communications Enabled
PTI_Ch1_Manual	BOOL	FALSE	---	TRUE	Publish Only	Ch1 Manual This variable is set by the user from the touch panel.
PTI_Ch1_Manual_MV	REAL	0	---	TRUE	Publish Only	Ch1 Manual MV This variable is set by the user from the touch panel.

*1. Variables starting with "TC01" are for a Temperature Control Unit whose device name is defined as "TC01".

*2. Variables starting with "PTI" are defined as the input of the touch panel.

*3. Variables starting with "PTO" are defined as the output of the touch panel.

● Internal variables

Variable name	Description	Default	Data types
Ch1_Auto_or_Manual_previous_value	Ch1 Auto or Manual Previous Value	FALSE	BOOL

Ladder Programming

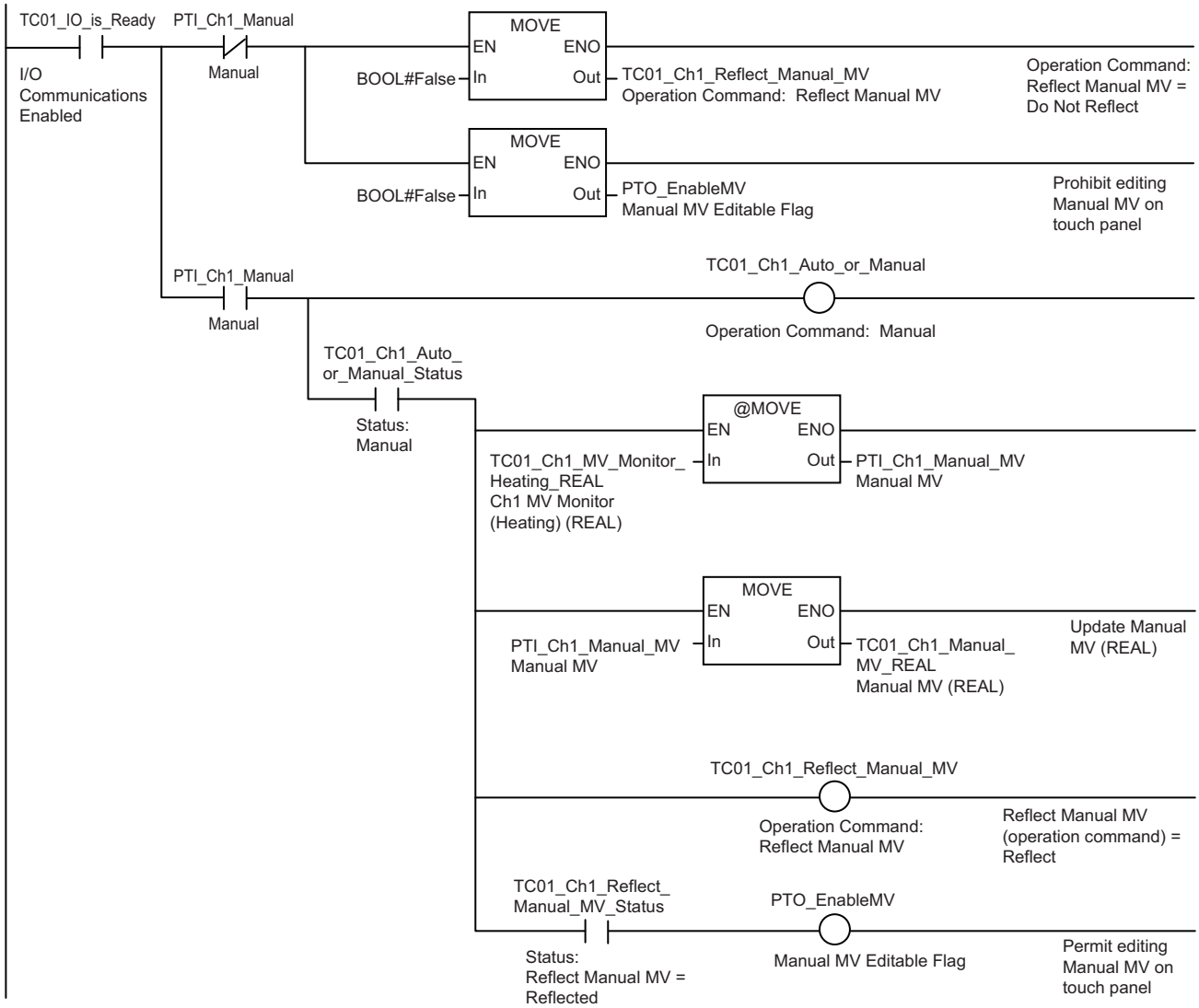

ST Programming

```
// Initialization of variable
TC01_Ch1_Auto_or_Manual := FALSE; // Operation Command: Auto or Manual = Auto
TC01_Ch1_Reflect_Manual_MV := FALSE; // Operation Command: Reflect Manual MV = Do Not
// Reflect
PTO_EnableMV := FALSE; // Prohibit editing Manual MV on touch panel

// I/O Communications Enabled
IF (TC01_IO_is_Ready = TRUE) THEN
    // In the case of Manual
    IF (PTI_Ch1_Manual = TRUE) THEN
        TC01_Ch1_Auto_or_Manual := TRUE; // Operation Command: Auto or Manual = Man-
ual
        // In the case of Status: Auto or Manual = Manual
        IF (TC01_Ch1_Auto_or_Manual_Status = TRUE) THEN
           // When switching from Auto -> Manual, set MV Monitor (Heating) (REAL) to
            // Ch1 Manual MV
            IF (Ch1_Auto_or_Manual_previous_value = FALSE) THEN
                    PTI_Ch1_Manual_MV := TC01_Ch1_MV_Monitor_Heating_REAL;
            END_IF;
            // Set Ch1 Manual MV to Ch1 Manual MV (REAL)
            TC01_Ch1_Manual_MV_REAL := PTI_Ch1_Manual_MV;
            // Operation Command: Reflect Manual MV = Reflect
            TC01_Ch1_Reflect_Manual_MV := TRUE;
            // In the case of Status: Reflect Manual MV = Reflected
            IF (TC01_Ch1_Reflect_Manual_MV = TRUE) THEN
                    // Permit editing Manual MV on touch panel
                    PTO_EnableMV := TRUE;
            END_IF;
        END_IF;
    END_IF;
END_IF;

// Update Previous Value
Ch1_Auto_or_Manual_previous_value := TC01_Ch1_Auto_or_Manual_Status;
```

A-5-6 I/O Data Tuning Parameter Update

Version Information

This sample program can be used in a Temperature Control Unit with unit version 1.1 or later.

A program that reflects the default value to the output data when the power is turned on, and updates the tuning parameters that are updated at the time of execution of tuning to the output data is described below. This sample program is an example during the execution of tuning by AT and automatic filter adjustment. The timing chart during the execution of tuning is shown below.

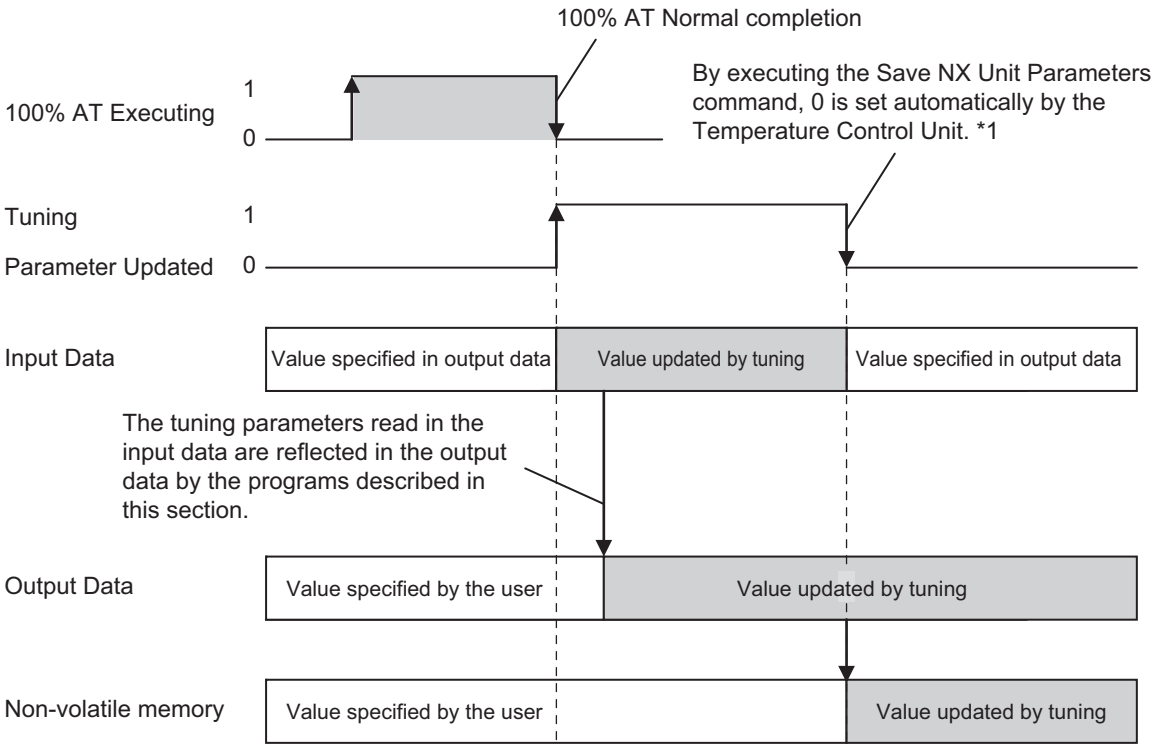

*1. For details on a sample program using “Save NX Unit Parameters”, refer to *A-5-3 Tuning Parameter Backup Part 1* on page A-101 and *A-5-4 Tuning Parameter Backup Part 2* on page A-104.

I/O Map

The following table shows the settings of variables that are assigned to the I/O Map on the Sysmac Studio.

I/O port name	Variable name *1	Description	Data type	Variable Type
Ch1 100 Percent AT Status	TC01_Ch1_100_Percent_AT_Status	Ch1 100% AT Execution Status	BOOL	Global Variable
Ch1 40 Percent AT Status	TC01_Ch1_40_Percent_AT_Status	Ch1 40% AT Execution Status	BOOL	Global Variable
Ch1 Automatic Filter Adjustment Status	TC01_Ch1_Automatic_Filter_Adjustment_Status	Ch1 Automatic Filter Adjustment Execution Status	BOOL	Global Variable
Ch1 Proportional Band Monitor	TC01_Ch1_Proportional_Band_Monitor	Ch1 Proportional Band Monitor	UINT	Global Variable
Ch1 Integration Time Monitor	TC01_Ch1_Integration_Time_Monitor	Ch1 Integral Time Monitor	UINT	Global Variable
Ch1 Derivative Time Monitor	TC01_Ch1_Derivative_Time_Monitor	Ch1 Derivative Time Monitor	UINT	Global Variable
Ch1 Input Digital Filter Monitor	TC01_Ch1_Input_Digital_Filter_-Monitor	Ch 1 Input Digital Filter Monitor	UINT	Global Variable
Ch1 Proportional Band	TC01_Ch1_Proportional_Band	Ch1 Proportional Band	UINT	Global Variable
Ch1 Integration Time	TC01_Ch1_Integration_Time	Ch1 Integration Time	UINT	Global Variable
Ch1 Derivative Time	TC01_Ch1_Derivative_Time	Ch1 Derivative Time	UINT	Global Variable
Ch1 Input Digital Filter	TC01_Ch1_Input_Digital_Filter	Ch1 Input Digital Filter	UINT	Global Variable
Ch1 Tuning Parameter Updated	TC01_Ch1_Tuning_Parameter_Updated	Ch1 Tuning Parameter Update Status FALSE:Tuning Parameters Not Updated TRUE:Tuning Parameters Updated	BOOL	Global Variable

*1. Variables starting with "TC01" are for a Temperature Control Unit whose device name is defined as "TC01".

Variable Table

The external variables and internal variables used in the program are described below.

External variables

Use the global variable table shown below as the external variables.

Variable name*1	Data types	Default value	AT	Retain	Network Publish	Description
TC01_Ch1_100_Percent_AT_Status	BOOL	FALSE	ECAT://node#[1,1]/Ch1 Operating Status/Ch1 100 Percent AT Status	FALSE	Do not publish.	Ch1 100% AT Execution Status
TC01_Ch1_40_Percent_AT_Status	BOOL	FALSE	ECAT://node#[1,1]/Ch1 Operating Status/Ch1 40 Percent AT Status	FALSE	Do not publish.	Ch1 40% AT Execution Status
TC01_Ch1_Automatic_Filter_Adjustment_Status	BOOL	FALSE	ECAT://node#[1,1]/Ch1 Operating Status/Ch1 Automatic Filter Adjustment Status	FALSE	Do not publish.	Ch1 Automatic Filter Adjustment Execution Status
TC01_Ch1_Proportional_Band_Monitor	UINT	0	ECAT://node#[1,1]/Ch1 Proportional Band Monitor	FALSE	Do not publish.	Ch1 Proportional Band Monitor
TC01_Ch1_Integration_Time_Monitor	UINT	0	ECAT://node#[1,1]/Ch1 Integration Time Monitor	FALSE	Do not publish.	Ch1 Integral Time Monitor
TC01_Ch1_Derivative_Time_Monitor	UINT	0	ECAT://node#[1,1]/Ch1 Derivative Time Monitor	FALSE	Do not publish.	Ch1 Derivative Time Monitor
TC01_Ch1_Input_Digital_Filter_Monitor	UINT	0	ECAT://node#[1,1]/Ch1 Input Digital Filter Monitor	FALSE	Do not publish.	Ch 1 Input Digital Filter Monitor
TC01_Ch1_Proportional_Band	UINT	0	ECAT://node#[1,1]/Ch1 Proportional Band	FALSE	Do not publish.	Ch1 Proportional Band
TC01_Ch1_Integration_Time	UINT	0	ECAT://node#[1,1]/Ch1 Integration Time	FALSE	Do not publish.	Ch1 Integration Time
TC01_Ch1_Derivative_Time	UINT	0	ECAT://node#[1,1]/Ch1 Derivative Time	FALSE	Do not publish.	Ch1 Derivative Time
TC01_Ch1_Input_Digital_Filter	UINT	0	ECAT://node#[1,1]/Ch1 Input Digital Filter	FALSE	Do not publish.	Ch1 Input Digital Filter
TC01_Ch1_Tuning_Parameter_Updated	BOOL	FALSE	ECAT://node#[1,1]/Ch1 Operating Status/Ch1 Tuning Parameter Updated	FALSE	Do not publish.	Ch1 Tuning Parameter Update Status FALSE:Tuning Parameters Not Updated TRUE:Tuning Parameters Updated
TC01_IO_is_Ready	BOOL	FALSE	---	FALSE	Do not publish.	I/O Communications Enabled

Variable name*1	Data types	Default value	AT	Retain	Network Publish	Description
PTI_ExecSaveParam	BOOL	FALSE	---	FALSE	Publish Only.	This variable is commanded by the user from the Unit Parameter Save Command touch panel.

*1. Variables starting with "TC01" are for a Temperature Control Unit whose device name is defined as "TC01".

● Internal variables

Variable name	Description	Default	Data types
Copy_Tuning_Data_Req	Tuning Data Copy Request	FALSE	BOOL
Copy_Tuning_Data_Req_previous_value	Tuning Data Copy Request Previous Value	FALSE	BOOL
TC01_IO_is_Ready_previous_value	I/O Communications Enabled Previous Value	FALSE	BOOL
Ch1_100_Percent_AT_Status_previous_value	Ch1 100% AT Execution Status Previous Value	FALSE	BOOL
Ch1_40_Percent_AT_Status_previous_value	Ch1 40% AT Execution Status Previous Value	FALSE	BOOL
Ch1_Automatic_Filter_Adjustment_Status_previous_value	Ch1 Automatic Filter Adjustment Execution Status Previous Value	FALSE	BOOL

Ladder Programming

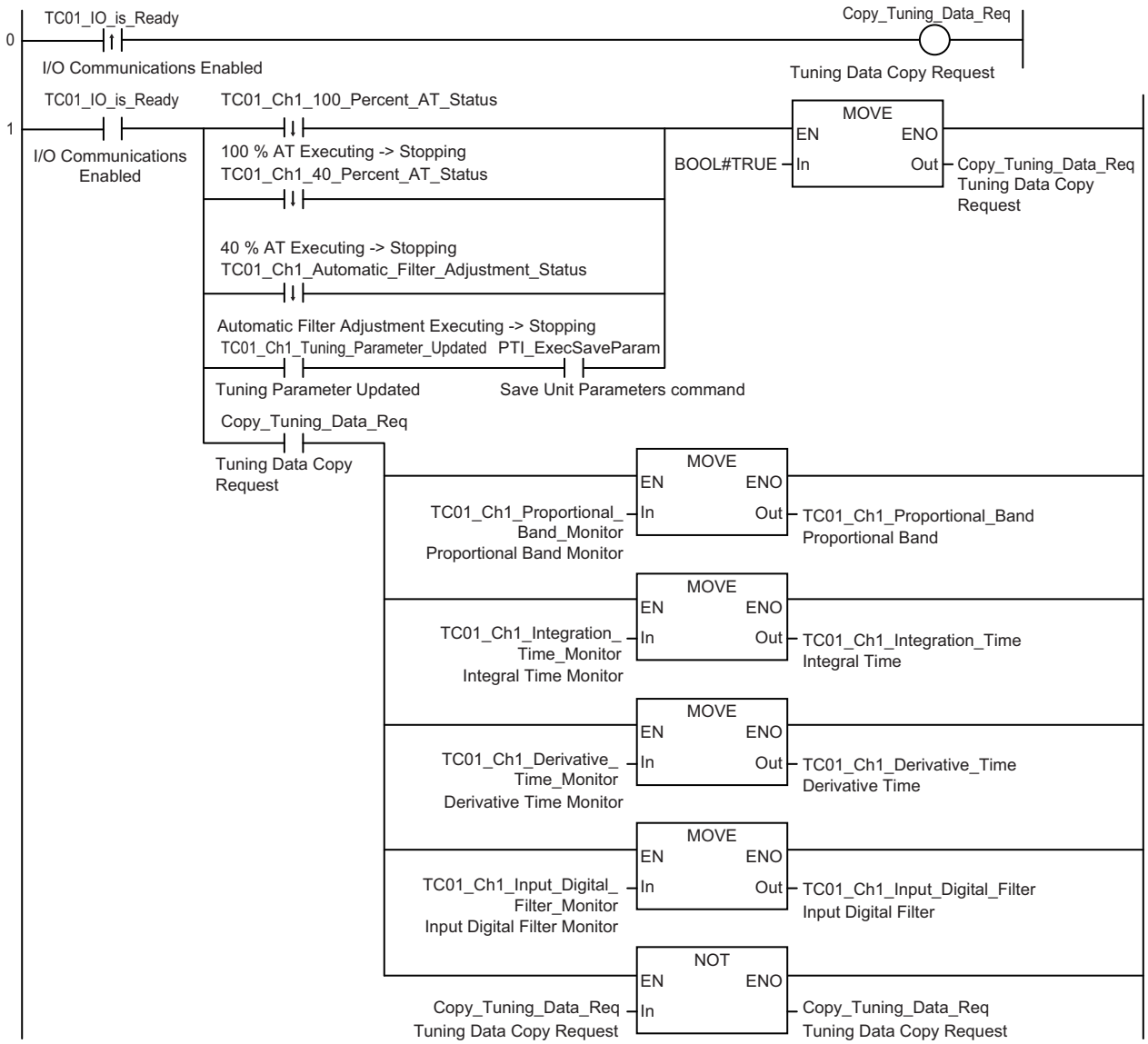

ST Programming

```
// When I/O Communications Disabled changes to Enabled (during startup)
IF ((TC01_IO_is_Ready_previous_value = FALSE) AND (TC01_IO_is_Ready = TRUE)) THEN
    // Tuning data copy request issued
    Copy_Tuning_Data_Req := TRUE;
END_IF;
// When I/O Communications is Enabled
IF (TC01_IO_is_Ready = TRUE) THEN
    // When the execution status of either 100% AT, 40% AT, or automatic filter
    // adjustment changes from executing to stopping, or when tuning parameters are
    // updated, and Unit Parameter Save Command is issued
    IF ( (Ch1_100_Percent_AT_Status_previous_value = TRUE) AND (TC01_Ch1_100_
    // Percent_AT_Status = FALSE) OR
       (Ch1_40_Percent_AT_Status_previous_value = TRUE) AND (TC01_Ch1_40_
    // Percent_AT_Status = FALSE) OR
       (Ch1_Automatic_Filter_Adjustment_Status_previous_value = TRUE) AND
       (TC01_Ch1_Automatic_Filter_Adjustment_Status = FALSE) OR
       ((TC01_Ch1_Tuning_Parameter_Updated = TRUE) AND (PTI_ExecSaveParam = TRUE)) )
    // THEN Tuning data copy request issued
    Copy_Tuning_Data_Req := TRUE;
    END_IF;
    // When Tuning Data Copy Request is issued
    IF (Copy_Tuning_Data_Req = TRUE) THEN
            // Copy tuning data from In data to Out data
            TC01_Ch1_Proportional_Band := TC01_Ch1_Proportional_Band_Monitor;
            TC01_Ch1_Integration_Time := TC01_Ch1_Integration_Time_Monitor;
            TC01_Ch1_Derivative_Time := TC01_Ch1_Derivative_Time_Monitor;
            TC01_Ch1_Input_Digital_Filter := TC01_Ch1_Input_Digital_Filter_Monitor;
            // No Tuning Data Copy Request
            Copy_Tuning_Data_Req := FALSE;
    END_IF;
END_IF;

// Update Previous Value
TC01_IO_is_Ready_previous_value := TC01_IO_is_Ready;
Ch1_100_Percent_AT_Status_previous_value := TC01_Ch1_100_Percent_AT_Status;
Ch1_40_Percent_AT_Status_previous_value := TC01_Ch1_40_Percent_AT_Status;
Ch1_Automatic_Filter_Adjustment_Status_previous_value := TC01_Ch1_Automatic_Filter_
// Adjustment_Status;
```

A-5-7 When the Temperature Control Unit is Connected to a CPU Unit

This section describes a usage example in which the Temperature Control Unit in the configuration example above is connected to an NX-series NX1P2 CPU Unit. Only the differences from the previous configuration example in which the Temperature Control Unit is connected in an EtherCAT Slave Terminal are described.

Consider these differences while reading the above example that uses an EtherCAT Slave Terminal.

System Configuration

The system configuration example is given below.

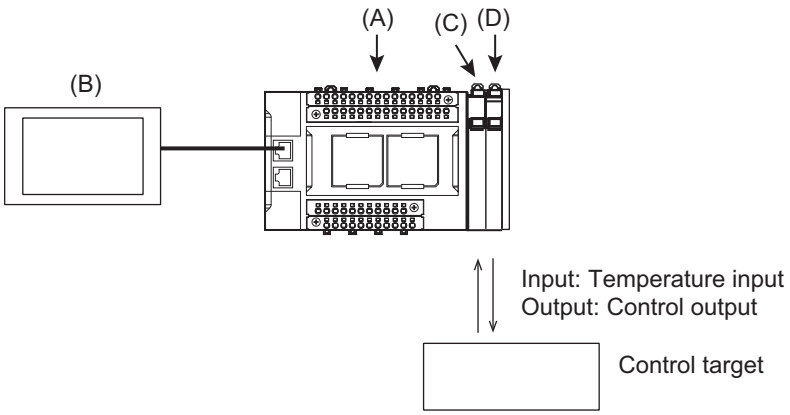

Letter	Description	Model	Differences from example using an EtherCAT Slave Terminal
(A)	Controller and EtherCAT Master	NX1P2-9024DT	This is an NX1P2 CPU Unit.
(B)	Touch panel	---	These are the same as in the other example.
(C)	Additional I/O Power Supply Unit	NX-PF630	The NX1P2 CPU Unit does not have an I/O power supply terminal for the NX Unit. An Additional I/O Power Supply Unit must be installed as the right adjacent Unit of the CPU Unit.
(D)	Temperature Control Units	NX-TC2405 *1	These are the same as in the other example.

*1. NX-TC2407 is used for the program of tuning parameter backup part 2.

In contrast to the NX Unit configuration using an EtherCAT Slave Terminal, the Additional I/O Power Supply Unit must be installed as the right adjacent Unit of the CPU Unit in order to supply I/O power to the Temperature Control Unit. Therefore, the NX Unit number of the NX Unit changes. These are described in the following table.

Unit classification	Model	Differences from example using an EtherCAT Slave Terminal
CPU Unit	NX1P2-9024DT	This is an NX1P2 CPU Unit.
Additional I/O Power Supply Unit	NX-PF630	Installed as the right adjacent Unit of the CPU Unit in order to supply I/O power to the Temperature Control Unit. Its NX Unit number is 1.
Temperature Control Units	NX-TC2405	The NX Unit number is increased by 1 to be 2.

Touch Panel Specifications

These settings are the same as in the example that uses an EtherCAT Slave Terminal.

Unit operation settings

These settings are the same as in the example that uses an EtherCAT Slave Terminal.

Programs Used in Common

The following settings apply to the program that determine communicatios possibility when the Temperature Control Unit is connected to a CPU Unit.

● I/O Map

There is no variable to be allocated to the I/O map from the Sysmac Studio.

● External variables

The external variables used in the program are described below.

Use the global variable table and system-defined variables shown below as the external variables.

a) Global variable table

Variable name*1	Data types	Default value	AT	Retain	Network Publish	Description
TC01_Mes_is_Ready	BOOL	FALSE	---	FALSE	Do not publish.	Message communications possible.
TC01_IO_is_Ready	BOOL	FALSE	---	FALSE	Do not publish.	I/O Communications Enabled

*1. Variables starting with "TC01" are for a Temperature Control Unit whose device name is defined as "TC01".

b) System-defined variables

Variable name	Description	Data type
_NXB_UnitIOActiveTbl [2]	NX Unit I/O Data Communicating Status (Unit2)	ARRAY[0..8] OF BOOL
_NXB_UnitMsgActiveTbl [2]	NX Unit Message Communications Enabled Status (Unit2)	ARRAY[0..8] OF BOOL

● Internal variables

There are no internal variables used in the program.

● Ladder Programming

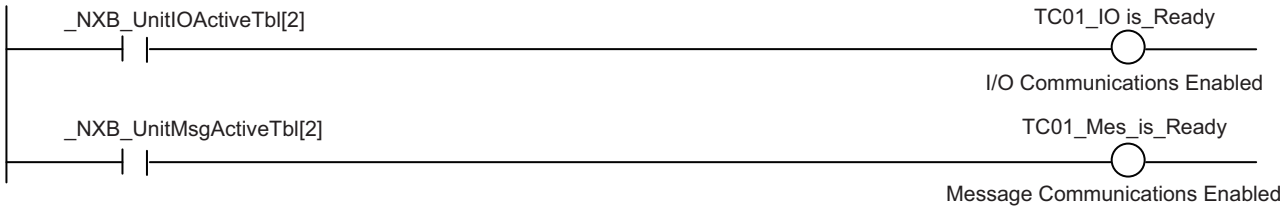

● ST Programming

```
// Initialization of variable
TC01_IO_is_Ready:= FALSE;             //I/O Communications Not Possible
TC01_Mes_is_Ready:= FALSE;            // Message Communications Not Possible

// I/O Communications Enabled
IF (_NXB_UnitIOActiveTbl[2] = TRUE) THEN
    TC01_IO_is_Ready := TRUE; // I/O Communications Enabled
END_IF;
// Message Communications Enabled
IF (_NXB_UnitMsgActiveTbl[2] = TRUE) THEN
    TC01_Mes_is_Ready := TRUE;// Message Communications Enabled
END_IF;
```

Settings of Each Sample Program

In contrast to the sample programs for the configuration with the EtherCAT Slave Terminal, AT specifications of the following variables are different. Note that the I/O map, LD program, or ST program are the same as in the example that uses an EtherCAT Slave Terminal.

● Standby sequence alarm

Variable name	AT specification in the case of EtherCAT Slave Terminal	AT specification when the Temperature Control Unit is connected to the CPU Unit
TC01_Ch1_RUN_or_STOP	ECAT://node#[1,1]/Ch1 Operation Command/Ch1 RUN or STOP	IOBus://unit#2/Ch1 Operation Command/Ch1 RUN or STOP
TC01_Ch1_Set_Point_REAL	ECAT://node#[1,1]/Ch1 Set Point REAL	IOBus://unit#2/Ch1 Set Point REAL
TC01_Ch1_Measured_Value_-REAL	ECAT://node#[1,1]/Ch1 Measured Value REAL	IOBus://unit#2/Ch1 Measured Value REAL

● Tuning parameter backup Part 1

There are no variables for which the AT specification is to be changed.

● Tuning parameter backup Part 2

Variable name	AT specification in the case of EtherCAT Slave Terminal	AT specification when the Temperature Control Unit is connected to the CPU Unit
TC01_Ch1_Tuning_Parameter_Updated	ECAT://node#[1,1]/Ch1 Operating Status/Ch1 Tuning Parameter Updated	IOBus://unit#2/Ch1 Operating Status/Ch1 Tuning Parameter Updated

● Inheriting the MV when switching to Manual Mode

Variable name	AT specification in the case of EtherCAT Slave Terminal	AT specification when the Temperature Control Unit is connected to the CPU Unit
TC01_Ch1_Reflect_Manual_MV	ECAT://node#[1,1]/Ch1 Operation Command/Ch1 Reflect Manual MV	IOBus://unit#2/Ch1 Operation Command/Ch1 Reflect Manual MV
TC01_Ch1_Auto_or_Manual	ECAT://node#[1,1]/Ch1 Operation Command/Ch1 Auto or Manual	IOBus://unit#2/Ch1 Operation Command/Ch1 Auto or Manual
TC01_Ch1_Auto_or_Manual_Status	ECAT://node#[1,1]/Ch1 Operating Status/Ch1 Auto or Manual Status	IOBus://unit#2/Ch1 Operating Status/Ch1 Auto or Manual Status
TC01_Ch1_MV_Monitor_Heating_-REAL	ECAT://node#[1,1]/Ch1 MV Monitor Heating REAL	IOBus://unit#2/Ch1 MV Monitor Heating REAL
TC01_Ch1_Manual_MV_REAL	ECAT://node#[1,1]/Ch1 Manual MV REAL	IOBus://unit#2/Ch1 Manual MV REAL
TC01_Ch1_Reflect_Manual_M-V_Status	ECAT://node#[1,1]/Ch1 Operating Status/Ch1 Reflect Manual MV Status	IOBus://unit#2/Ch1 Operating Status/Ch1 Reflect Manual MV Status

● I/O data tuning parameter update

Variable name	AT specification in the case of EtherCAT Slave Terminal	AT specification when the Temperature Control Unit is connected to the CPU Unit
TC01_Ch1_100_Percent_AT_Status	ECAT://node#[1,1]/Ch1 Operating Status/Ch1 100 Percent AT Status	IOBus://unit#2/Ch1 Operating Status/Ch1 100 Percent AT Status
TC01_Ch1_40_Percent_AT_Status	ECAT://node#[1,1]/Ch1 Operating Status/Ch1 40 Percent AT Status	IOBus://unit#2/Ch1 Operating Status/Ch1 40 Percent AT Status
TC01_Ch1_Automatic_Filter_Adjustment_Status	ECAT://node#[1,1]/Ch1 Operating Status/Ch1 Automatic Filter Adjustment Status	IOBus://unit#2/Ch1 Operating Status/Ch1 Automatic Filter Adjustment Status
TC01_Ch1_Proportional_Band_Monitor	ECAT://node#[1,1]/Ch1 Proportional Band Monitor	IOBus://unit#2/Ch1 Proportional Band Monitor
TC01_Ch1_Integration_Time_Monitor	ECAT://node#[1,1]/Ch1 Integration Time Monitor	IOBus://unit#2/Ch1 Integration Time Monitor
TC01_Ch1_Derivative_Time_Monitor	ECAT://node#[1,1]/Ch1 Derivative Time Monitor	IOBus://unit#2/Ch1 Derivative Time Monitor
TC01_Ch1_Input_Digital_Filter_Monitor	ECAT://node#[1,1]/Ch1 Input Digital Filter Monitor	IOBus://unit#2/Ch1 Input Digital Filter Monitor
TC01_Ch1_Proportional_Band	ECAT://node#[1,1]/Ch1 Proportional Band	IOBus://unit#2/Ch1 Proportional Band
TC01_Ch1_Integration_Time	ECAT://node#[1,1]/Ch1 Integration Time	IOBus://unit#2/Ch1 Integration Time
TC01_Ch1_Derivative_Time	ECAT://node#[1,1]/Ch1 Derivative Time	IOBus://unit#2/Ch1 Derivative Time
TC01_Ch1_Input_Digital_Filter	ECAT://node#[1,1]/Ch1 Input Digital Filter	IOBus://unit#2/Ch1 Input Digital Filter
TC01_Ch1_Tuning_Parameter_Updated	ECAT://node#[1,1]/Ch1 Operating Status/Ch1 Tuning Parameter Updated	IOBus://unit#2/Ch1 Operating Status/Ch1 Tuning Parameter Updated

A-6 Version Information with CPU Units

This section provides version-related information when connecting Units to a CPU Unit. This section describes the relationships between the unit versions of each Unit and the CPU Unit, and Sysmac Studio version, and the specification changes for each unit version of each Unit.

A-6-1 Relationship between Unit Versions of Units

The relationship between the unit versions of each Unit and the CPU Unit, and Sysmac Studio version are shown below.

Interpreting the Version Combination Tables

The items that are used in the version combination tables are given below.

Refer to the user's manual for the CPU Unit for the models of CPU Unit to which NX Units can be connected.

NX Unit		Corresponding unit versions/versions	
Model	Unit version	CPU Unit	Sysmac Studio
Model numbers of NX Units.	Unit versions of NX Units.	Unit versions of the CPU that are compatible with the NX Units.	Sysmac Studio versions that are compatible with the NX Units and CPU Unit.

Version Combination Tables

- With the combinations of the unit versions/versions shown below, you can use the functions that are supported by the unit version of the Unit model. Use the unit versions/versions (or the later/higher unit versions/versions) that correspond to the NX Unit models and the unit versions. You cannot use the specifications that were added or changed for the relevant NX Unit models and the unit versions unless you use the corresponding unit versions/versions.
- Depending on the type and model of the Unit to which the NX Unit is connected, some Units do not have the corresponding versions given in the table. If a Unit does not have the specified version, support is provided by the oldest available version after the specified version. Refer to the user’ s manuals for the specific Units for the relation between models and versions.
- If you use the corresponding unit versions/versions given in the following table or later/higher versions, refer to the version information in the user's manual for the CPU Unit.

NX Units		Corresponding unit versions/versions	
Model	Unit Version	CPU Units	Sysmac Studio
NX-TC2405	Ver.1.0	Ver.1.13	Ver.1.21
	Ver.1.1		Ver.1.22
NX-TC2406	Ver.1.0		Ver.1.21
	Ver.1.1		Ver.1.22
NX-TC2407	Ver.1.0		Ver.1.21
	Ver.1.1		Ver.1.22
NX-TC2408	Ver.1.0		Ver.1.21
	Ver.1.1		Ver.1.22
NX-TC3405	Ver.1.0		Ver.1.21
	Ver.1.1		Ver.1.22
NX-TC3406	Ver.1.0		Ver.1.21
	Ver.1.1		Ver.1.22
NX-TC3407	Ver.1.0		Ver.1.21
	Ver.1.1		Ver.1.22
NX-TC3408	Ver.1.0		Ver.1.21
	Ver.1.1		Ver.1.22

A-6-2 Functions That Were Added or Changed for Each Unit Version

This section describes the relationship between the version of the NX Unit, the version of the CPU Unit, and the version of Sysmac Studio for each function that is added or changed.

Description of the support functions version correspondence table

Each item used in the version correspondence table of the support functions is described below.

Description	Added/Changed	NX Units		Corresponding unit versions/versions	
		Model	Unit Version	CPU Unit	Sysmac Studio
Function of the NX Unit.	Indicates whether the function is a new addition or a change in specifications.	Model numbers of NX Units.	Unit version of the NX Unit compatible with the function.	Unit version of the CPU Unit compatible with the NX Unit having the function.	Sysmac Studio versions that are compatible with the NX Units and CPU Unit.

Description of the support functions version correspondence table

The version correspondence table of the support functions is as described below.

- The added or changed functions can be used in the version specified in the table below or a later version.
- Depending on the type and model of the unit to which the NX Unit is connected, some Units do not have the corresponding versions given in the table. If a Unit does not have the specified version, support is provided by the oldest available version after the specified version. Refer to the user' s manuals for the specific Units for the relation between models and versions.
- If you use the corresponding unit versions/versions given in the following table or later/higher versions, refer to the version information in the user's manual for the CPU Unit.

Description		Added/Changed	NX Units		Corresponding unit versions/versions	
			Model	Unit Version	CPU Unit	Sysmac Studio
I/O data	Assign a function to reserved data	Changed	NX-TC□□□□	Ver.1.1	Ver.1.13	Ver.1.22
output and alarm status	Assign a function to reserved bit • Bit 9: Alarm 1 Detection • Bit 10: Alarm 2 Detection	Changed				
Operation Command	Assign a function to reserved bit • Bit 11: Reflect Data for Adjustment	Changed				
MV Branch		Added				
Temperature alarm function		Added				
LBA (Loop Burnout Alarm)		Added				

A-7 Version Information with Communications Coupler Units

This section provides version-related information when connecting Units to a Communications Coupler Unit.

Version information is provided separately for each Communications Coupler Unit that an NX Unit is connected to.

A-7-1 Connection to an EtherCAT Coupler Unit

This section describes the relationship between the unit versions of each Unit, EtherCAT Coupler Unit, CPU Unit and Industrial PC, versions of the Sysmac Studio, and the specification changes for each unit version.

Relationship between Unit Versions of Units

The items that are used in the version combination table are given below.

NX Unit		Corresponding unit versions/versions		
Model	Unit version	EtherCAT Coupler Unit	CPU Unit or Industrial PC	Sysmac Studio
Model numbers of NX Units.	Unit versions of NX Units.	Unit versions of EtherCAT Coupler Units that are compatible with the NX Units.	Unit version of the NJ/NX-series CPU Units or NY-series Industrial PCs that are compatible with the EtherCAT Coupler Unit.	Sysmac Studio versions that are compatible with the NX Units, EtherCAT Coupler Units, CPU Units, and Industrial PCs.

The version combination table is given below.

- With the combinations of the unit versions/versions shown below, you can use the functions that are supported by the unit version of the Unit model. Use the unit versions/versions (or the later/higher unit versions/versions) that correspond to the NX Unit models and the unit versions. You cannot use the specifications that were added or changed for the relevant NX Unit models and the unit versions unless you use the corresponding unit versions/versions.
- Depending on the type and model of the Unit to which the NX Unit is connected, some Units do not have the corresponding versions given in the table. If a Unit does not have the specified version, support is provided by the oldest available version after the specified version. Refer to the user' s manuals for the specific Units for the relation between models and versions.
- You cannot connect the relevant NX Unit to the target Communications Coupler Unit if "---" is shown in the corresponding unit versions/versions column.
- If you use the corresponding unit versions/versions given in the following table or later/higher versions, refer to the version information in the user's manual for the Communications Coupler Unit, CPU Unit, and Industrial PC.

Refer to *Functions That Were Added or Changed for Each Unit Version* on page A-126 for the functions that are supported by each unit version of the Communications Coupler Units and NX Units.

NX Units		Corresponding unit versions/versions		
Model	Unit Version	EtherCAT Coupler Unit	CPU Unit or Industrial PC	Sysmac Studio
NX-TC2405	Ver.1.0	Ver.1.0 *1	Ver. 1.05	Ver. 1.21
	Ver.1.1			Ver. 1.22
NX-TC2406	Ver.1.0			Ver. 1.21
	Ver.1.1			Ver. 1.22
NX-TC2407	Ver.1.0			Ver. 1.21
	Ver.1.1			Ver. 1.22
NX-TC2408	Ver.1.0			Ver. 1.21
	Ver.1.1			Ver. 1.22
NX-TC3405	Ver.1.0			Ver. 1.21
	Ver.1.1			Ver. 1.22
NX-TC3406	Ver.1.0			Ver. 1.21
	Ver.1.1			Ver. 1.22
NX-TC3407	Ver.1.0			Ver. 1.21
	Ver.1.1			Ver. 1.22
NX-TC3408	Ver.1.0			Ver. 1.21
	Ver.1.1			Ver. 1.22

*1. When you connect the Unit to a master of other manufacturer, use an EtherCAT Coupler Unit with unit version 1.5 or later.

Functions That Were Added or Changed for Each Unit Version

This section describes the relationship between the version of the NX Unit, the version of the Communications Coupler Unit, CPU Unit, Industrial PC, and the version of Sysmac Studio for each function that is added or changed.

Each item used in the version correspondence table of the support functions is described below.

Description	Added/Changed	NX Units		Corresponding unit versions/versions		
		Model	Unit Version	EtherCAT Coupler Unit	CPU Unit or Industrial PC	Sysmac Studio
Function of the NX Unit.	Indicates whether the function is a new addition or a change in specifications.	Model of the NX Unit.	Unit version of the NX Unit compatible with the function.	Unit version of the EtherCAT Coupler Unit compatible with the NX Unit having the function.	Unit version of the NJ/NX-series CPU Unit compatible with the EtherCAT Coupler Unit or NY-series industrial PC.	Version of Sysmac Studio compatible with the NX Unit, EtherCAT Coupler Unit, CPU Unit, and industrial PC.

The version correspondence table of the support functions is as described below.

- The added or changed functions can be used in the version specified in the table below or a later version.
- Depending on the type and model of the Unit to which the NX Unit is connected, some Units do not have the corresponding versions given in the table. If a Unit does not have the specified version, support is provided by the oldest available version after the specified version. Refer to the user' s manuals for the specific Units for the relation between models and versions.
- If you use the corresponding unit versions/versions given in the following table or later/higher versions, refer to the version information in the user's manual for the Communications Coupler Unit, CPU Unit, and Industrial PC.

Description		Added/Changed	NX Units		Corresponding unit versions/versions		
			Model	Unit Version	EtherCAT Coupler Unit	CPU Unit or industrial PC	Sysmac Studio
I/O data	Assign a function to reserved data	Changed	NX-TC□□□□	Ver.1.1	Ver.1.0*1	Ver.1.05	Ver.1.22
output and alarm status	Assign a function to reserved bit • Bit 9: Alarm 1 Detection • Bit 10: Alarm 2 Detection	Changed					
Operation Command	Assign a function to reserved bit • Bit 11: Reflect Data for Adjustment	Changed					
MV Branch		Added					
Temperature alarm function		Added					
LBA (Loop Burnout Alarm)		Added					

*1. When you connect the Unit to a master of other manufacturer, use an EtherCAT Coupler Unit with unit version Ver. 1.5 or later.

A-7-2 Connection to an EtherNet/IP Coupler Unit

This section describes the relationship between the unit versions of each Unit, EtherNet/IP Coupler Unit, CPU Unit and Industrial PC, versions of the Sysmac Studio and NX-IO Configurator, and the specification changes for each unit version.

Relationship between Unit Versions of Units

The items that are used in the version combination tables are given below.

NX Unit		Corresponding unit versions/versions					
		Application with an NJ/NX/NY-series Controller			Application with a CS/CJ/CP-series PLC		
Model	Unit version	EtherNet/IP Coupler Unit	CPU Unit or Industrial PC	Sysmac Studio	EtherNet/IP Coupler Unit	Sysmac Studio	NX-IO Configurator
Model numbers of NX Units.	Unit versions of NX Units.	Unit versions of EtherNet/IP Coupler Units that are compatible with the NX Units.	Unit version of the NJ/NX-series CPU Units or NY-series Industrial PCs that are compatible with the EtherNet/IP Coupler Unit.	Sysmac Studio versions that are compatible with the NX Units, EtherNet/IP Coupler Units, CPU Units, and Industrial PCs.	Unit versions of EtherNet/IP Coupler Units that are compatible with the NX Units.	Sysmac Studio versions that are compatible with the NX Units and EtherNet/IP Coupler Units.	Version of the NX-IO Configurator that supports the NX Units, EtherNet/IP Coupler Units, and CPU Units.

The version combination tables are given below.

- With the combinations of the unit versions/versions shown below, you can use the functions that are supported by the unit version of the Unit model. Use the unit versions/versions (or the later/higher unit versions/versions) that correspond to the NX Unit models and the unit versions. You cannot use the specifications that were added or changed for the relevant NX Unit models and the unit versions unless you use the corresponding unit versions/versions.

- Depending on the type and model of the Unit to which the NX Unit is connected, some Units do not have the corresponding versions given in the table. If a Unit does not have the specified version, support is provided by the oldest available version after the specified version. Refer to the user' s manuals for the specific Units for the relation between models and versions.
- You cannot connect the relevant NX Unit to the target Communications Coupler Unit if "---" is shown in the corresponding unit versions/versions column.
- If you use the corresponding unit versions/versions given in the following table or later/higher versions, refer to the version information in the user's manual for the Communications Coupler Unit, CPU Unit, and Industrial PC.

Refer to *Functions That Were Added or Changed for Each Unit Version* on page A-126 for the functions that are supported by each unit version of the Communications Coupler Units and NX Units.

NX Units		Corresponding unit versions/versions					
		Use with an NJ/NX/NY-series Controller*1			Use with a CS/CJ/CP-series CPU Unit*2		
Model	Unit version	EtherNet/IP Coupler Unit	CPU Unit or Industrial PC	Sysmac Studio	EtherNet/IP Coupler Unit	Sysmac Studio	NX-IO Configurator
NX-TC2405	Ver.1.0	Ver.1.2	Ver.1.14	Ver.1.21	Ver.1.2	Ver.1.21	Ver.1.11
	Ver.1.1			Ver.1.22		Ver.1.22	Ver.1.12
NX-TC2406	Ver.1.0			Ver.1.21		Ver.1.21	Ver.1.11
	Ver.1.1			Ver.1.22		Ver.1.22	Ver.1.12
NX-TC2407	Ver.1.0			Ver.1.21		Ver.1.21	Ver.1.11
	Ver.1.1			Ver.1.22		Ver.1.22	Ver.1.12
NX-TC2408	Ver.1.0			Ver.1.21		Ver.1.21	Ver.1.11
	Ver.1.1			Ver.1.22		Ver.1.22	Ver.1.12
NX-TC3405	Ver.1.0			Ver.1.21		Ver.1.21	Ver.1.11
	Ver.1.1			Ver.1.22		Ver.1.22	Ver.1.12
NX-TC3406	Ver.1.0			Ver.1.21		Ver.1.21	Ver.1.11
	Ver.1.1			Ver.1.22		Ver.1.22	Ver.1.12
NX-TC3407	Ver.1.0			Ver.1.21		Ver.1.21	Ver.1.11
	Ver.1.1			Ver.1.22		Ver.1.22	Ver.1.12
NX-TC3408	Ver.1.0			Ver.1.21		Ver.1.21	Ver.1.11
	Ver.1.1			Ver.1.22		Ver.1.22	Ver.1.12

*1. Refer to the user's manual of the EtherNet/IP Coupler Unit for the unit versions of EtherNet/IP Units corresponding to EtherNet/IP Coupler Units.

*2. Refer to the user's manual of the EtherNet/IP Coupler Unit for the unit versions of CPU Units and EtherNet/IP Units corresponding to EtherNet/IP Coupler Units.

Functions That Were Added or Changed for Each Unit Version

This section describes the relationship between the version of the NX Unit, the version of the Communication Coupler Unit, CPU Unit, Industrial PC, and also the version of Sysmac Studio and NX-IO Configurator for each function that is added or changed.

Each item used in the version correspondence table of the support functions is described below.

A-8 Displaying the Edit Unit Operation Settings Tab Page

A-8-1 Connection to the CPU Unit

This section describes how to display the Edit Unit Operation Settings Tab Page that is used to create Unit operation settings on the Sysmac Studio for the NX Units connected to the CPU Unit.

You can use the methods described below to display the Edit Unit Operation Settings Tab Page on the CPU and Expansion Racks Tab Page on the Sysmac Studio.

Refer to the *Sysmac Studio Version 1 Operation Manual* (Cat. No. W504) for the method of displaying the CPU and Expansion Racks Tab Page.

● Method 1

Double-click the NX Unit to set.

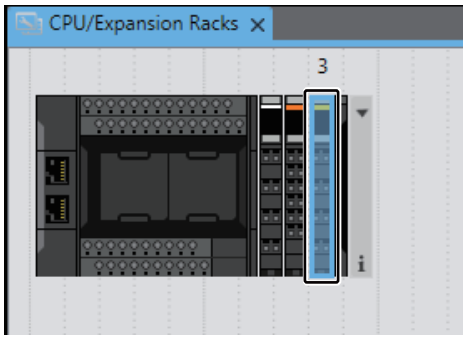

● Method 2

Right-click the NX Unit and select **Edit Unit Operation Settings** from the menu.

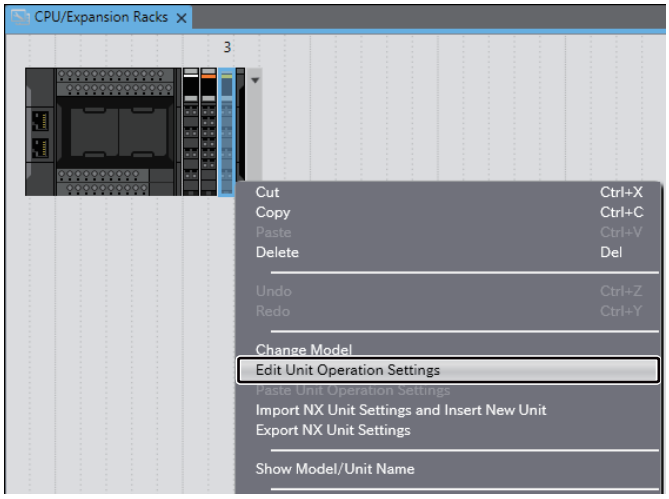

● Method 3

Select the NX Unit and click the **Edit Unit Operation Settings** Button.

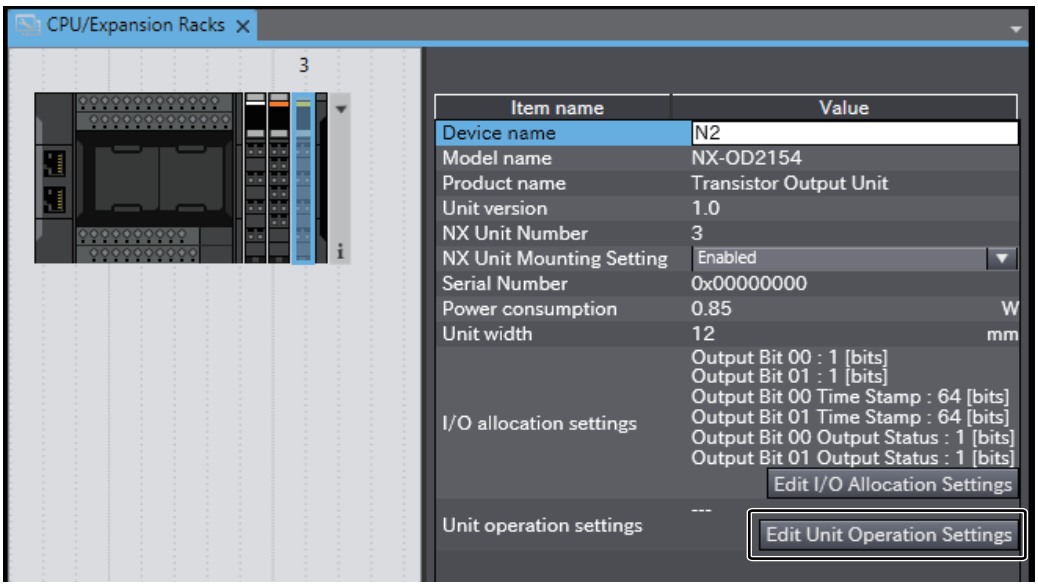

A-8-2 Connection to the Slave Terminal

This section describes how to display the Edit Unit Operation Settings Tab Page that is used to create Unit operation settings on the Sysmac Studio for NX Units in the Slave Terminal.

You can use the methods described below to display the Edit Unit Operation Settings Tab Page on the Edit Slave Terminal Configuration Tab Page on the Sysmac Studio.

Refer to the *Sysmac Studio Version 1 Operation Manual* (Cat. No. W504) for the method of displaying the Edit Slave Terminal Configuration Tab Page.

Refer to the operation manual for your Support Software for the method to display the Edit Slave Terminal Configuration Tab Page or Edit Unit Operation Settings Tab Page with Support Software other than the Sysmac Studio.

● Method 1

Double-click the NX Unit to set.

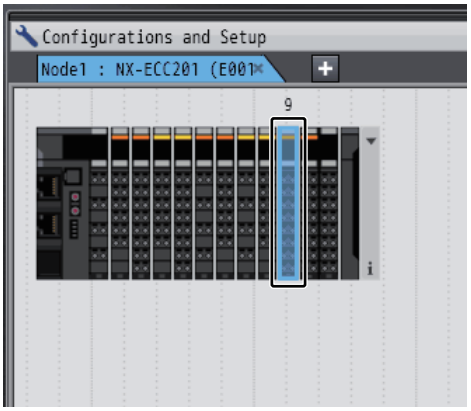

Method 2

Right-click the NX Unit and select ***Edit Unit Operation Settings*** from the menu.

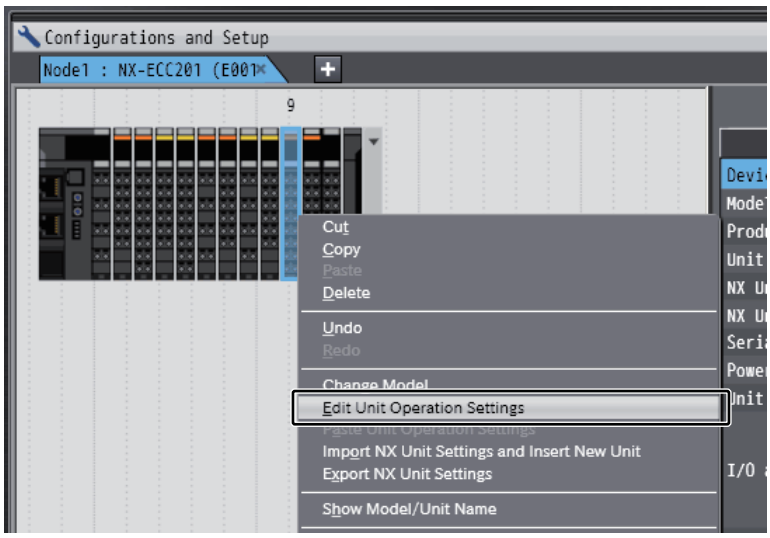

Method 3

Select the NX Unit and click the ***Edit Unit Operation Settings*** Button.

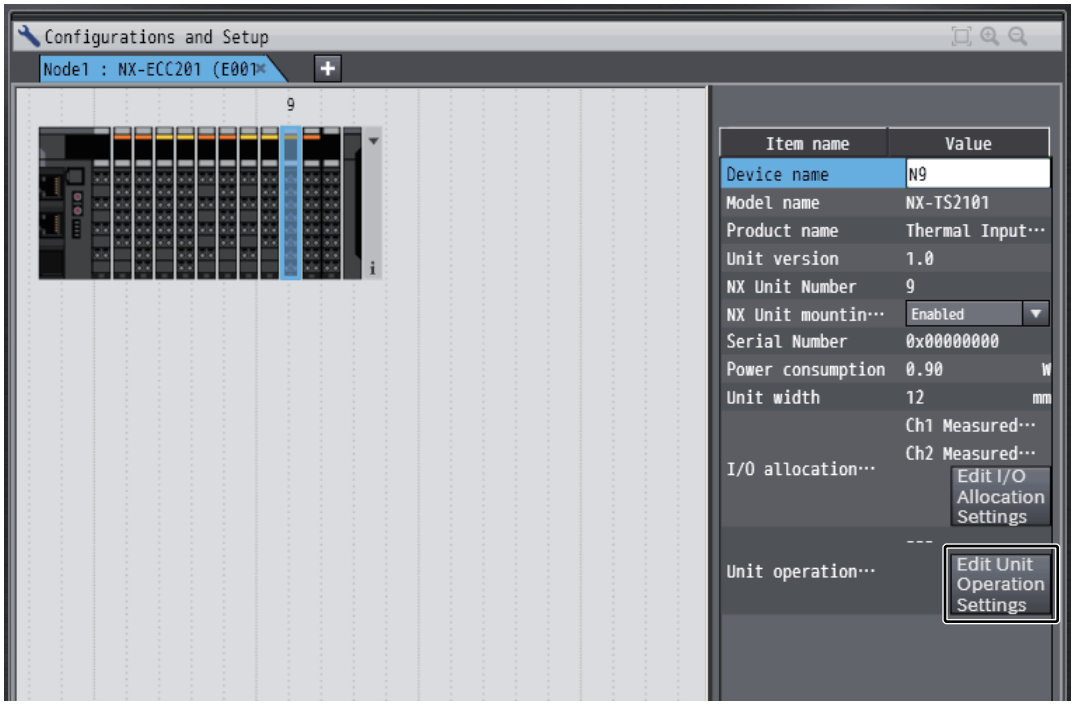

A-9 Edit Unit Operation Settings Tab Page

This section describes the Edit Unit Operation Settings Tab Page on the Sysmac Studio. If you use the Support Software other than the Sysmac Studio, refer to the operation manual for your Support Software for the pane to edit the Unit operation settings.

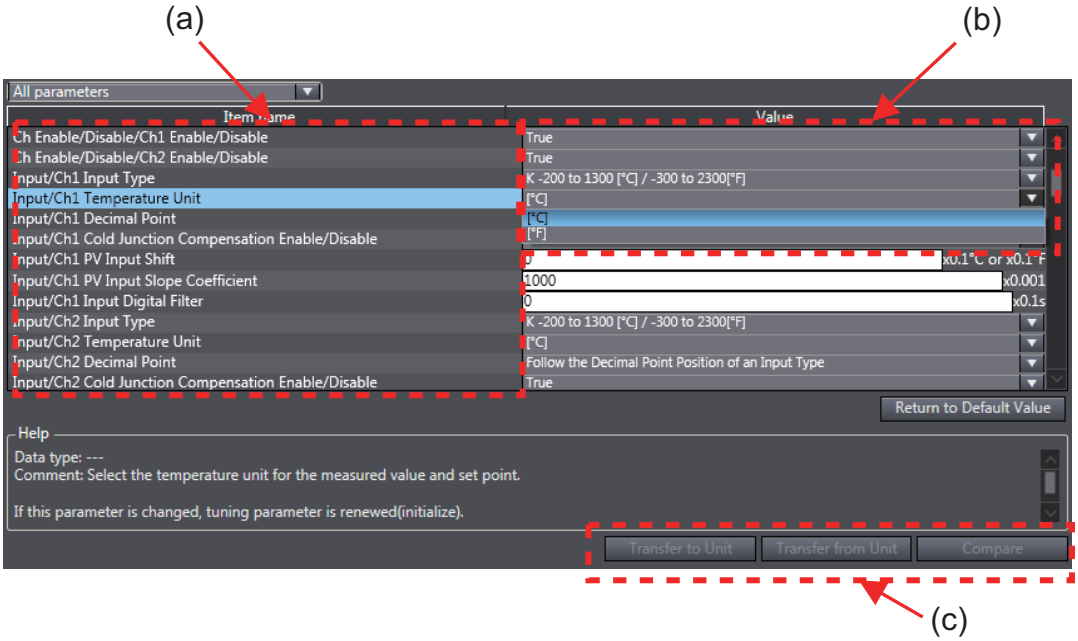

Letter	Meaning
(a)	Setting items for Unit operation settings.
(b)	The set values of the setting items. Select a setting item from the drop-down list or enter the set value in the text box.
(c)	Transfer and Compare buttons. To transfer the Unit operation settings from Sysmac Studio to the NX Unit, click the **Transfer to Unit** button.

Additional Information

- You can click the list button on the Edit Unit Operation Settings Tab Page to narrow the items that are displayed. The following screen captures show an example of displaying only the input functions for Ch1.

  Example:

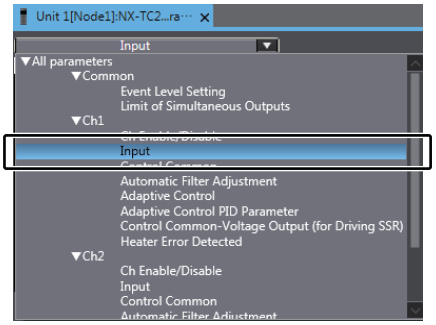

Select Input Functions under Ch1.

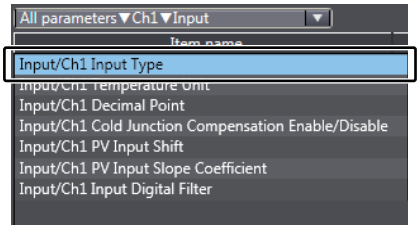

Only the input functions for Ch1 are displayed.

- If you set a value different from the default value, the value on the Sysmac Studio is displayed in a different color.
- You can click the **Return to Default Value** Button to return all set values on the Sysmac Studio to the default values.
- Help for the settings is displayed at the bottom of the Edit Unit Operation Settings Tab Page.

A-10 Temperature Sensor for Packing Machines

This section describes the specifications of temperature sensors for packing machines.

Type	Name	Model number and appearance	Temperature range	Element type	Method	Class	Protective material	Terminal form
Specialized Type for Packaging Machines	Sheathed Thermocouple	E52-CA□□A□ D=1□S□ 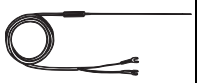	0 to 650°C	K(CA)	Grounded	Class 2 (0.75)	ASTM316 L	Prewired lead wires

A-10-1 Model Number Legend

The protective tubing length and lead length can be specified. Use the model number legend to specify the required models, and ask your OMRON representative for their delivery times and prices. As a screwless clamp terminal block is used on the Temperature Control Unit, specify a model with ferrule terminals.

E52-CA□□ A□ D=1 S□ □□M

Code	Element type
CA	K

Protective tubing length L (cm)
Specify the tubing length in centimeters.
The following range of lengths is available.

Diameter D	Length L (cm)
1.0	6
1.0	12
1.0	3 to 100 (in centimeters, variable)

Code	Terminal type
A	Exposed lead wires

Code	Terminal processing
Y	Y-type crimp terminals for M3.0
F	Ferrules

Code	Protective tubing diameter D	Protective tubing structure
D=1	1 mm	Sheathed

Code	Application
S	Temperature Sensor for Packing Machines

Code	Compensating conductor
1	Heat resistant (7 cores)
2	Flexible and heat resistant (30 cores)

Lead wire length M (m)
Specify the M length in meters.
Range: 0.5, 1, 2, or 0.5 to 12 (in meters, variable)

- **Model number example:**

  Element: K, protective tube length: 12 cm, exposed lead wires, ferrules, protective tubing diameter: 1 cm, flexible and heat resistant, lead wire length: 2 m

  E52-CA12AF D=1 S2 2M

A-10-2 Dimensions

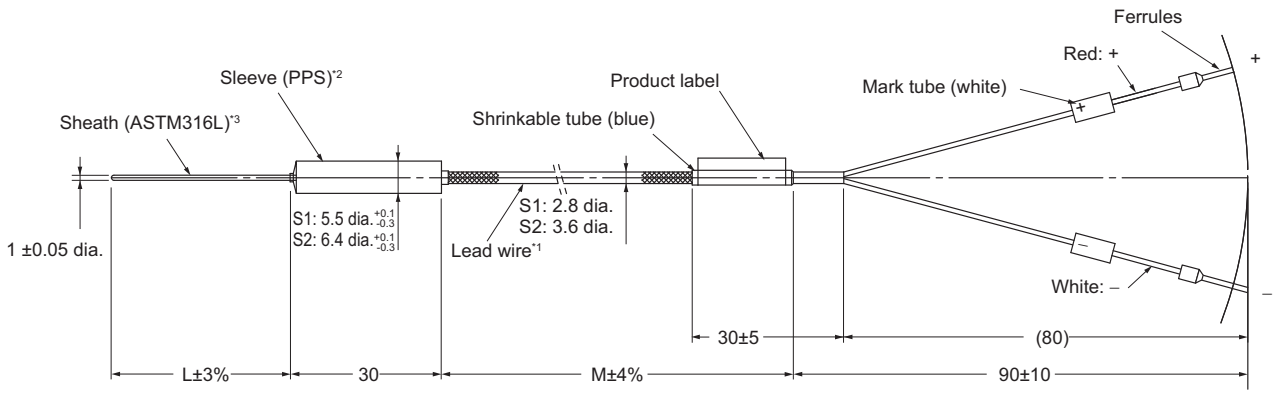

*1. Lead wires (compensating wires) (excluding terminal sections)
Heat-resistance model (0 to 200°C): PFA glass-wool sheath with stainless outer shield
Flexible, heat-resistance model (0 to 200°C): PFA glass-wool sheath with stainless outer shield

*2. Temperature range of sleeve: 0 to 260°C

*3. The sheath can be easily bent. Performance will not be adversely affected even if the sheath is bent somewhat.
Do not bend the sheath beyond the following values.
Minimum bending radius: 2 mm
Bendable section: 8 mm or father from the end

A-10-3 Mounting Brackets

Use the following brackets or the equivalent to mount a Temperature Sensor for Packaging Machines to a hot plate.

Mounting bracket	Application	Manufacturer	Model number
(a)	1-mm-dia. protective tube bracket	Misumi Corporation	Square Shims ASFCS-series
(b)	Sleeve bracket (S1)	Misumi Corporation	Cable Clips COPU3-20P
		Digi-Key	Cable Clamp RPC1156-ND
	Sleeve bracket (S2)	Misumi Corporation	Cable Clips COPU4-20P
		Digi-Key	Cable Clamp RPC1474-ND

Note All of the above mounting brackets are SUS304.

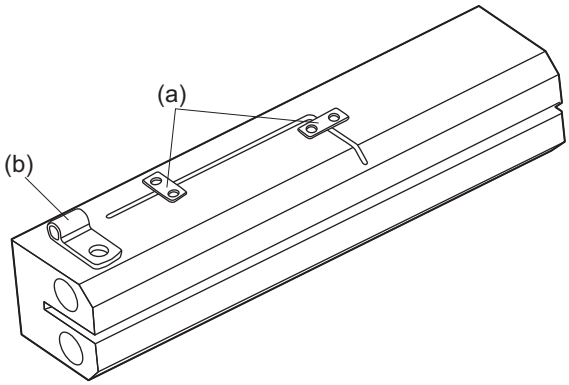

I

Index

Index

A

access A-37
additional I/O power supply Unit 4-9
additional NX Unit power supply Unit 4-9
applicable wires 4-10
assumed cause 8-8

B

Built-in EtherCAT port 11

C

calibration control number 3-3, 4-21
calibration control number label 3-3
Coding Pins 4-23
cold junction sensor 3-3
Communications Master Unit 5-3
CPU Unit 5-3
crimping tools 4-11
current errors 8-5

D

data attribute A-37
data range A-37
data type A-37
DC enable setting 5-6
default value A-37
dimensions A-87
DIN Track mounting hooks 3-3

E

event code 8-8
event name 8-8

F

ferrules 4-11
flat-blade screwdriver 4-13

G

ground terminals 4-11, 4-12, 4-16

H

heating plate 4-44

I

I/O allocation A-37
I/O check function 4-27
I/O power supply 4-8
I/O power supply connection Unit 4-9
I/O power supply terminals 4-8
Incorrect attachment prevention hole 4-23
incorrect attachment prevention holes 4-25
index A-37
indicators 3-3
Industrial PC 11
Input Data Set 1 6-3

L

log of past errors 8-6

M

marker attachment locations 3-3
markers 4-4
maximum I/O power supply current 4-9
Model number indication 3-5

N

NX bus connector 3-3
NX Objects A-37
NX Unit power supply 4-8

O

object name A-37
Objects that accept I/O allocations A-39
one-point correction 7-19
Operating Status 6-16
Operation Command 6-18
Output and Alarm Status 6-17
Output Data Set 1 6-3

P

periodic inspection item 9-3
power supply from the NX bus 4-8
press at an angle 4-14, 4-18
preventing incorrect attachment 4-23
Procedures 2-4
protrusions for removing the Unit 3-3

R

refresh cycle of the NX bus 5-2, 5-3
release holes 3-4

S

Sample programming A-92
securing wires 4-16
SHT terminals 4-41
Slave Terminal 1-7
solid wires 4-12
subindex A-37

T

temperature sensors for packing machines 4-43
terminal block 3-3
terminal holes 3-4
terminal number indications 3-4
twisted wires 4-12
two-point correction 7-20

U

unit A-37
Unit hookup guides 3-3
unit specifications 3-3
Unit status 6-16

W

Watch Tab Page 4-26
wiring terminals 4-10

OMRON Corporation **Industrial Automation Company**
Kyoto, JAPAN
Contact: www.ia.omron.com

Regional Headquarters
OMRON EUROPE B.V.
Wegalaan 67-69, 2132 JD Hoofddorp
The Netherlands
Tel: (31)2356-81-300/Fax: (31)2356-81-388

OMRON ELECTRONICS LLC
2895 Greenspoint Parkway, Suite 200
Hoffman Estates, IL 60169 U.S.A.
Tel: (1) 847-843-7900/Fax: (1) 847-843-7787

OMRON ASIA PACIFIC PTE. LTD.
No. 438A Alexandra Road # 05-05/08 (Lobby 2),
Alexandra Technopark,
Singapore 119967
Tel: (65) 6835-3011/Fax: (65) 6835-2711

OMRON (CHINA) CO., LTD.
Room 2211, Bank of China Tower,
200 Yin Cheng Zhong Road,
PuDong New Area, Shanghai, 200120, China
Tel: (86) 21-5037-2222/Fax: (86) 21-5037-2200

Authorized Distributor:

© OMRON Corporation 2018 All Rights Reserved.
In the interest of product improvement,
specifications are subject to change without notice.

Cat. No. H228-E1-02 0418