18.5" LED HDTV + DVD

User's Guide for Model ITDE1988 v2109-01

For the most up-to-date version of this User's Guide, go to www.iliveelectronics.com

Safety Instructions & Warnings

WARNING: To reduce the risk of electric shock, do not remove cover (or back). No user-serviceable parts inside. Refer servicing to qualified service personnel.

The exclamation point within an equilateral triangle is intended to alert the user to the presence of important operating and maintenance (servicing) instructions in the literature accompanying the appliance.

The lightning flash with arrowhead symbol, within an equilateral triangle, is intended to alert the user to the presence of un-insulated "dangerous voltage" within the product's enclosure that may be of sufficient magnitude to constitute a risk of electric shock to persons.

This symbol indicates that this product incorporates double insulation between hazardous mains voltage and user accessible parts.

This product utilizes a Class 1 laser to read Compact Discs. This laser Compact Disc Player is equipped with safety switches to avoid exposure when the CD door is open and the safety interlocks are defeated. Invisible laser radiation is present when the CD Player's lid is open and the system's interlock has failed or been defeated. It is very important that you avoid direct exposure to the laser beam at all times. Please do not attempt to defeat or bypass the safety switches.

WARNING : This product can expose you to chemicals including lead, which is known to the State of California to cause cancer and birth defects or other reproductive harm. For more information go to www.P65Warnings.ca.gov. **This product meets and complies with all Federal regulations.**

Important Safety Instructions

- Read these Instructions.
- Keep these Instructions.
- Heed all Warnings.
- Follow all instructions.
- Do not use this apparatus near water.
- Clean only with a dry cloth.
- Do not block any ventilation openings. Install in accordance with the manufacturer's instructions.
- Do not install near any heat sources such as radiators, heat registers, stoves, or other apparatus (including amplifiers) that produce heat.
- Do not defeat the safety purpose of the polarized or grounding - type plug. A polarized plug has two blades with one wider than the other. A grounding type plug has two blades and a third grounding prong. The wide blade or the third prong are provided for your safety. When the provided plug does not fit into your outlet, consult an electrician for replacement of the obsolete outlet.
- Protect the power cord from being walked on or pinched particularly at plugs, convenience receptacles, and the point where they exit from the apparatus.
- Only use attachments/accessories specified by the manufacturer.
- Unplug this apparatus during lightning storms or when unused for long periods of time.
- Refer all servicing to qualified service personnel. Servicing is required when the apparatus has been damaged in any way, such as power-supply cord or plug is damaged, liquid has been spilled or objects have fallen into the apparatus, the apparatus has been exposed to rain or moisture, does not operate normally, or has been dropped.
- Use only with a cart, stand, tripod, bracket, or table specified by the manufacturer, or sold with the apparatus. When a cart is used, use caution when moving the cart/apparatus combination to avoid injury from tip-over.

WARNING: Never place a television set in an unstable location. A televisions set may fall, causing serious personal injury or death. Many injuries, particularly to children can be avoided by taking simple precautions such as:

- Using cabinets or stands recommended by the manufacturer of the televisions set.
- Only using furniture that can safely support the television set.
- Ensuring the televisions set is not overhanging the edge of the supporting furniture.
- Not placing the televisions set on cloth or other materials that may be located between the televisions set and supporting furniture.
- Educating children about the dangers of climbing on furniture to reach the televisions set or its controls.

If your television set is being retained and relocated, the same considerations as above should be applied.

NOTE: When choosing where to place this TV that there is a chance of staining and marks on the surface. As with any rubber compound made with oils, the feet could cause marks or staining where the feet rest.

FCC Warnings

Warning: Changes or modifications to this unit not expressly approved by the party responsible for compliance could void the user's authority to operate the equipment.

NOTE: This equipment has been tested and found to comply with the limits for a Class B digital device, pursuant to Part 15 of the FCC Rules. These limits are designed to provide reasonable protection against harmful interference in a residential installation. This equipment generates, uses, and can radiate radio frequency energy and, if not installed and used in accordance with the instructions, may cause harmful interference to radio communications. However, there is no guarantee that interference will not occur in a particular installation. If this equipment does cause harmful interference to radio or television reception, which can be determined by turning the equipment off and on, the user is encouraged to try to correct the interference by one or more of the following measures:

- Reorient or relocate the receiving antenna.
- Increase the separation between the equipment and receiver.
- Connect the equipment into an outlet on a circuit different from that to which the receiver is connected.
- Consult the dealer or an experienced radio/TV technician for help.

Additional Warnings and Precautions

- CAUTION: TO PREVENT ELECTRIC SHOCK, MATCH WIDE BLADE OF PLUG TO WIDE SLOT, FULLY INSERT.
- Mains plug is used as disconnect device and it should remain readily operable during intended use. In order to disconnect the apparatus from the mains completely, the mains plug should be disconnected from the mains socket outlet completely.
- **CAUTION**: Use of controls or adjustments or performance of procedures other than those specified may result in hazardous radiation exposure.
- WARNING: Changes or modifications to this unit not expressly approved by the party responsible for compliance could void the user's authority to operate the equipment.
- WARNING: Use of this unit near fluorescent lighting may cause interference regarding use of the remote. If the unit is displaying erratic behavior move away from any fluorescent lighting, as it may be the cause.
- WARNING: Shock hazard - Do Not Open.
- Caution and marking information is located at the rear or bottom of the apparatus.
- WARNING: To reduce the risk of fire or electric shock, do not expose this apparatus to rain, moisture, dripping, or splashing.
- Objects filled with liquids, such as vases, shall not be placed on the apparatus.
- CAUTION: Danger of explosion if battery is incorrectly replaced. Replace only with the same or equivalent type.
- WARNING: There is a danger of explosion if you attempt to charge standard Alkaline batteries in the unit. Only use rechargeable NiMH batteries.
- Battery shall not be exposed to excessive heat such as sunshine, fire or the like.
- Keep new and used batteries away from children. If the battery compartment does not close securely, stop using the product and keep it away from children.
- If you think batteries might have been swallowed or placed inside any part of the body, seek immediate medical attention.
- Do not mix old and new batteries.
- Completely replace all old batteries with new ones.
- Do not mix alkaline, standard (carbon-zinc), or rechargeable (ni-cad, ni-mh, etc) batteries.
- Batteries should be recycled or disposed of as per state and local guidelines.

Table of Contents

Setup 5
Includes
Connecting the Stand
Power
Remote

Orientation 6
TV Controls & Inputs
Remote Functions

Connecting Devices to Your TV 8
Connecting Cable TV or a TV Antenna
Connecting HDMI
Connecting Composite Audio/Video
Connecting a Computer
Connecting Optical Audio

DVD & CD 12
Playing a DVD or CD
Programming a DVD or CD
DVD Setup Menu

USB & SD, MMC, MS Memory Card 13
Using a USB Thumb Drive
Using a Memory Card

Settings. 14
Auto Scanning for Channels
Parental Controls (V-Chip)
Setting Favorites
Viewing Favorites
Setting the Clock

Mounting to a Wall 15
VESA Mount Specifications

Customer Support 16
Contact Information
Warranty
International Support

Setup

Includes

- Removable stand
- Remote control with 2 AAA batteries
- AC/DC power adapter
- Warranty
- User's Guide

NOTE: Some pixels may be visible on the screen, appearing as tiny red, green, blue or black spots. This is normal and is not a defect on the TV, and does not negatively affect the performance or picture quality.

Connecting the Stand

Take care not to place the TV on a surface that will scratch or damage the TV housing or screen. Using a phillips-head screwdriver, tighten the screws by hand. *Using a power drill could damage the TV stand.*

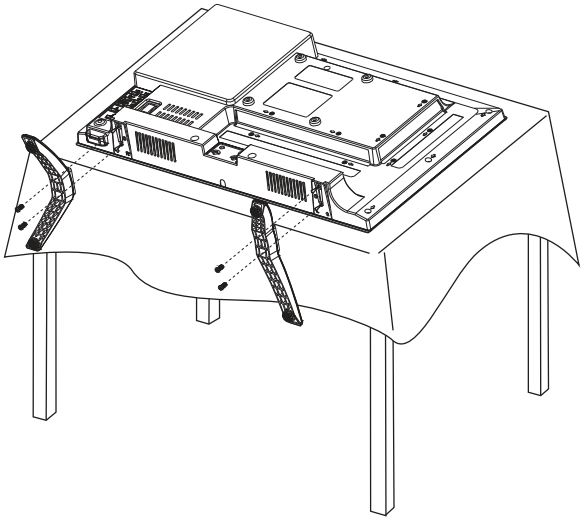

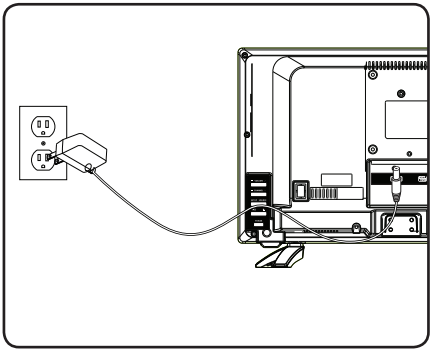

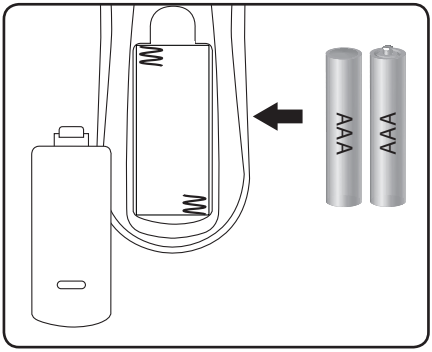

Power

Plug the AC/DC power adapter (included) into the DC power input on the TV and a standard power outlet.

Remote

Requires 2 AAA-size batteries (included).

Orientation

TV Controls & Inputs

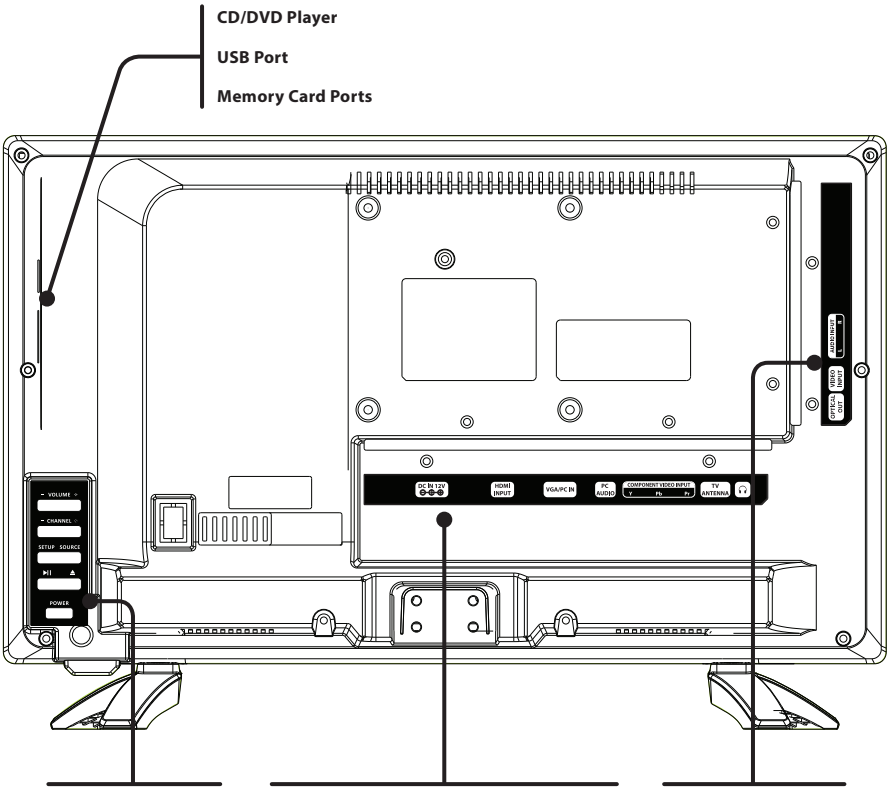

Volume -/+

Channel -/+

Setup/Source

Play/Pause/Eject

Power

DC Power Input

HDMI Input

VGA/PC Video Input

PC Audio Input (3.5mm)

Component Video Input (Y/Pb/Pr)

TV Antenna/ Cable Input

Headphone Jack

Optical Audio Output

Composite Video Input (Y)

Stereo Audio Input

Remote Functions

Source
Press and use the Arrow/Enter buttons to select the source.

Number Keypad
Use to enter channel or track numbers.

Picture
Press to adjust the picture between STANDARD, SOFT, USER, and DYNAMIC. The user mode can be customized by accessing Picture Settings in the menu.

Prev
In TV mode, press to switch to the previous channel.

Arrows/Enter
Press to make selections in the on screen menus.

Setup
Press to view the television setup menu.

Display
Press to view the on-screen display.

Aspect
Press to adjust the aspect ratio between ZOOM, WIDE, CINEMA, and NORMAL.

Mute
Press to mute the volume.

CC/Audio
For TV play, press to turn closed captioning ON or OFF.

For DVD play, press to adjust audio settings for the DVD.

Skip Back/Forward
Press to skip between chapters or tracks.

Stop
Press to stop an individual chapter or track during play.

Play/Pause
Press to play or pause an individual chapter or track.

Reverse/Fast Fwd
Press to search through an individual chapter or track.

Prog
Press to program a loaded disc to play titles, chapters, or tracks in a specified order.

DVD Setup
Change the display, language, screen saver, memory and audio settings for the DVD.

Repeat
Press to repeat the current selection or track.

Angle
Press to view alternate angles on supported DVDs.

Eject
Press to eject a loaded disc.

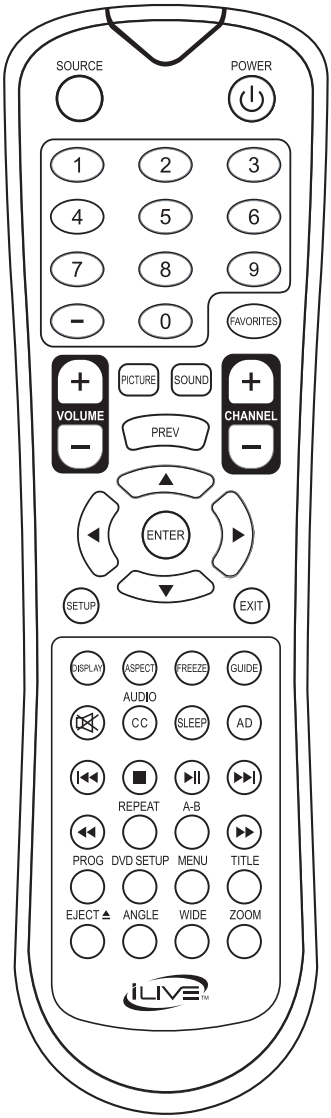

Power
Press to power the television off or on.

Favorites
Press to access your saved channels.

Sound
Press to adjust the sound between STANDARD, MUSIC, USER, MOVIE, and SPORTS. The user mode can be customized by accessing Sound Settings in the menu.

Channel ±
Press to adjust the television channel.

Prev
In TV mode, press to switch to the previous channel.

Exit
Press to exit the current on-screen menu.

Freeze
Press to freeze or unfreeze the current frame in TV mode.

Guide
In TV mode, press to view the on-screen television guide.

Sleep
Press to set the sleep timer. After the set time has expired the television will automatically power OFF.

AD
Press to enter the Audio Description settings menu (intended for hearing and visually impaired users).

A-B
Press to create a repeating loop on a specified section of a loaded DVD.

Title
Press to access the title menu on a loaded DVD.

Menu (DVD)
Press to access the loaded DVD's menu.

Wide
Press to switch between 4:3 LB, 4:3 PS, and 16:9.

Zoom
Press to zoom in or out on a loaded DVD.

Connecting Devices to Your TV

Connecting Cable TV or a TV Antenna

Requires a cable TV or "over-the-air" TV antenna wire (not included).

1. Connect the **Cable/Antenna** wire to the input on the television.
2. Press the **Source** button to switch to **TV mode**.
3. Press the **Setup** button to access the setup menu.
4. Press the **Arrow** (◀ ▶) buttons to highlight the **Channel** icon, and press the **Enter** button.
5. Press the **Arrow** (▲ ▼) buttons to highlight **Air/Cable**. Press the **Arrow** (◀ ▶) buttons to select **AIR or Cable**.
6. Press the Arrow (▲ ▼) buttons to highlight **Auto Scan**. Press the Enter button to begin scanning for available channels.

NOTE: In any Source mode, you can press the **channel +/ – button** on the remote to switch back to TV mode.

Connecting HDMI

HDMI offers superior sound and picture quality when compared to Composite or other connection types, and is the easiest way to connect your media devices to the television.

Requires a HDMI cable (not included) and a device that supports HDMI.

1. Using an HDMI cable, connect the **HDMI input** on the television to the **HDMI output** on your external media player, streaming, or gaming device.
2. Press the **Source** button to switch to the connected input **HDMI**.

Connecting Component (YPbPr) Video/Audio

Requires component video (green/blue/red) and RCA stereo (red/white) cables (not included).

1. Connect the **audio output** on your media device to the corresponding **color coded audio input** on the television with stereo RCA cables.
2. Connect the **video output** on your media device to the corresponding **color coded video inputs** on the television with a Component Video cable.
3. Power the television on and press the **Source** button to switch to the connected input **YPbPr**.

Connecting Cable TV or a TV Antenna - Rear View

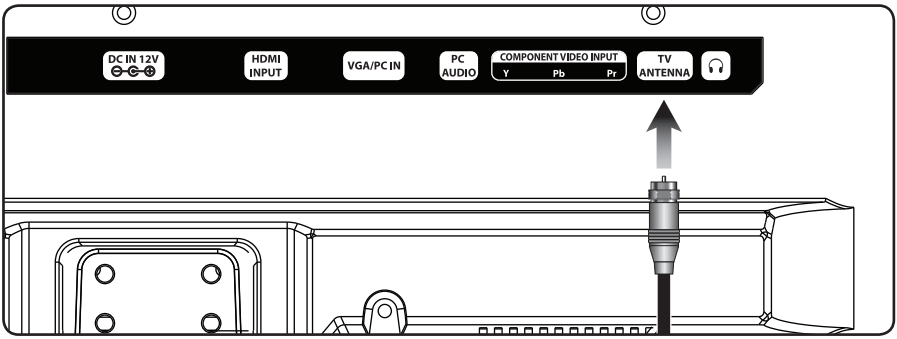

Connecting HDMI - Rear View

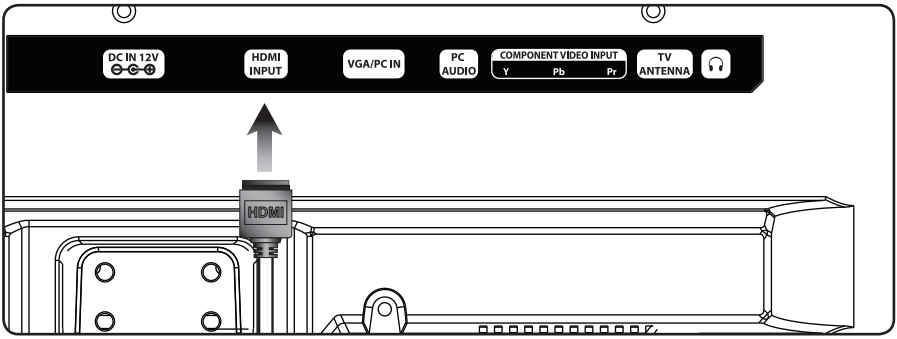

Connecting Component (YPbPr) Cables - Rear View

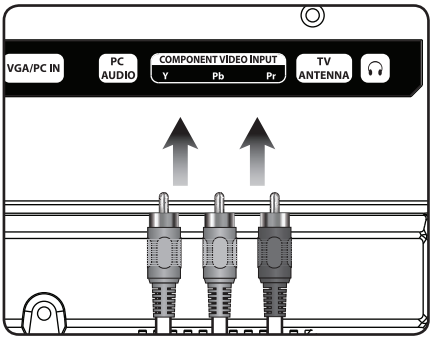

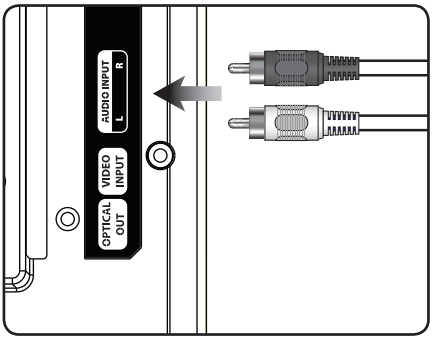

Connecting Devices to Your TV

Connecting Composite Audio/Video

Requires composite video (yellow) and RCA stereo (red/white) cables (not included).

1. Connect the video output on your media device to the corresponding color coded video inputs on the television with a **Composite Video cable**.
2. Connect the audio output on your media device to the corresponding color coded audio input on the television with **stereo RCA cables**.
3. Press the **Source** button to switch to the connected input **AV Composite**.

Connecting a Computer

Requires a VGA cable a 3.5mm audio cable (both not included) and a PC with a VGA and 3.5mm audio output.

1. Connect the computer's **VGA output** to the **VGA/PC Input** on the television.
2. Press the **Source** button to switch to the **PC Mode**.
3. Audio from the connected PC can be input to the television through the TV's **PC Audio** Input by using a 3.5mm audio cable (not included).

Connecting Optical Audio

Requires a Digital Optical Audio Cable (not included) and an audio receiver with a Digital Optical Input.

1. Connect the **Digital Optical Audio Cable** from the **Optical Output** on the television to the **Input** on the receiver.
2. Set the receiver to accept the Optical Input source **from the television**.

   Please Note:
   Home theater systems may label the Digital Optical Out source differently, such as "PCM", or"Digital Audio Input". Please consult your home theater system's user manual in order to select the correct input source.

   If there is no sound, be sure the Digital Audio Output is set to PCM (under the screen in TV Setup).

Connecting Composite Audio/Video- Rear View

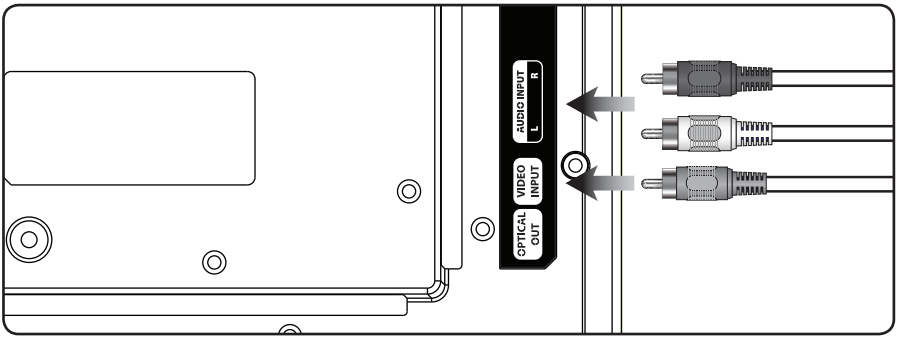

Connecting a Computer- Rear View

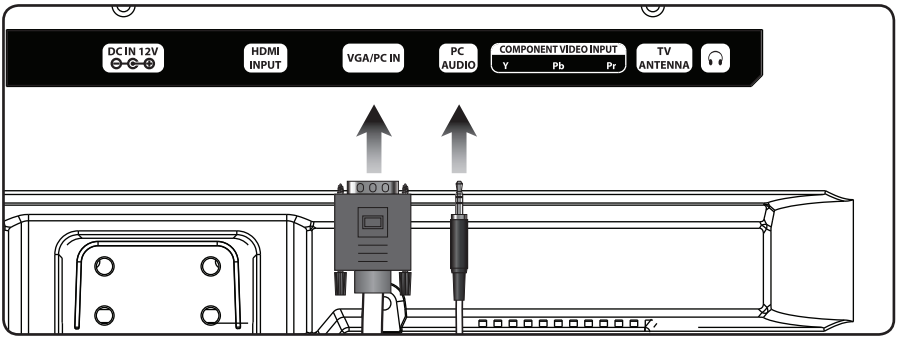

Connecting Optical Audio - Rear View

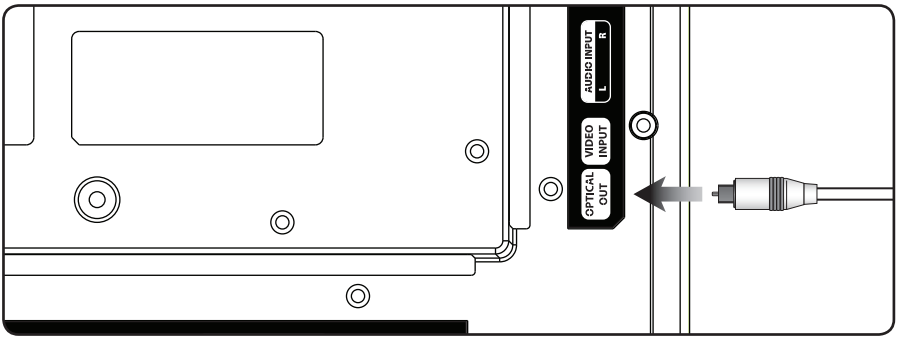

DVD & CD

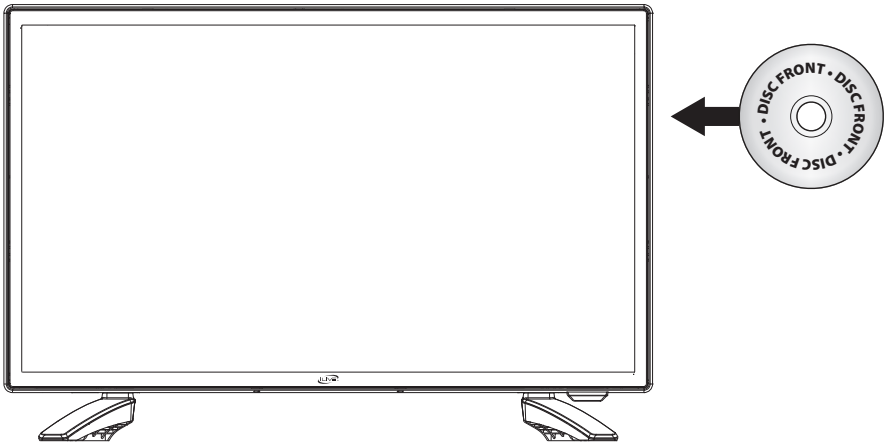

Playing a DVD or CD

Note: This unit is not compatible with MP3 CDs.

1. Insert a DVD or CD into the slot-load disc drive, with the **label side facing toward you.** Once a DVD or CD is loaded into the television, the TV will automatically switch to DVD mode
2. Press the **Play/Pause** button on the remote or TV to begin playing the loaded disc.

Programming a DVD or CD

1. While a DVD or CD is playing, press the **Program** button on the remote.
2. Using the **Number Keypad** enter in the chapters or tracks in the order you want them to play.
3. Highlight the on-screen **Start** button using the **Arrow** buttons and press the **Enter** button.
4. The programmed chapters and tracks will now play in the designated order.
5. To cancel a program, press the **Stop** button twice.

DVD Setup Menu

In DVD mode, press the **DVD Setup** button to access the DVD setup menu. Press the DVD Setup button to exit the DVD setup menu.

USB & SD, MMC, MS Memory Card

Using a USB Thumb Drive

1. Load a USB thumb drive into the USB Port on the side of the television.
2. Press the **Source** button to switch to USB mode.
3. Use the **Arrow and Enter** buttons to select and play content from the connected USB thumb drive.

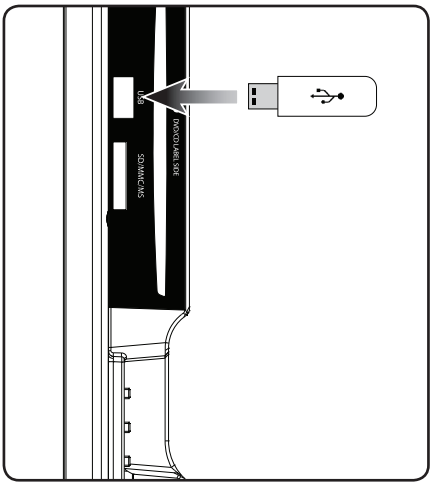

Using a Memory Card

1. Load an SD, MMC, or MS memory card on the side of the television.
2. Press the **Source** button on the remote to switch to SD mode.
3. Use the **Arrow and Enter** buttons to select and play content from the connected SD, MMC, or MS memory card.

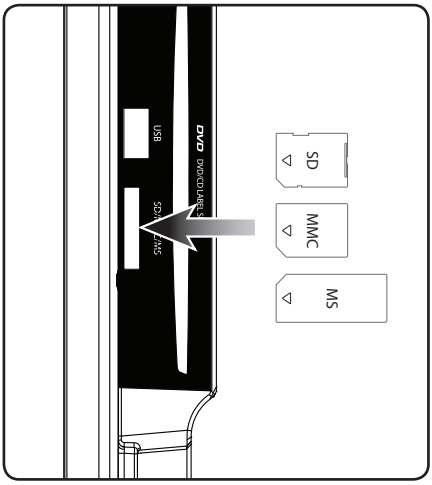

Settings

Auto Scanning for Channels

The Auto Channel Scan must be run before any channels can be viewed on the television. Initial channel scanning process may take up to 15 min.

1. Press the **Source** button to switch to TV mode.
2. Press the **Setup** button to access the Setup menu.
3. Press the **Arrow** (◀ ▶) buttons to highlight the **Channel** icon, and press the **Enter** button.
4. Press the **Arrow** (▲ ▼) buttons to highlight **AIR/Cable**, and press (◀ ▶) to select **AIR**.
5. Press the **Arrow** (▲ ▼) buttons to highlight **Auto Scan**, and press the **Enter** button to begin scanning for available channels.

Parental Controls (V-Chip)

1. Press the **Source** button to switch to TV mode.
2. Press the **Setup** button.
3. Press the **Arrow** (◀ ▶) buttons to highlight **Lock**, and press the **Enter** button.
4. Enter the default passcode **"0 0 0 0"** to access the **Lock** preferences.
5. From this menu, you can lock out specific ratings from the United States rating system or the Canadian rating system by accessing the V-CHIP settings. You can also lock the buttons on the television or lock specific sources from access.

Setting Favorites

1. Press the **Source** button to switch to TV mode.
2. Press the **Setup** button to access the setup menu.
3. Press the **Arrow** (◀ ▶) buttons to highlight the **Channel** icon, then press the **Enter** button.
4. Press the **Arrow** (▲ ▼) buttons to highlight the **Favorites** icon, then press the **Enter** button.
5. Use the **Arrow** (▲ ▼) buttons to select the desired channels, then press the **Enter** button.

Viewing Favorites

1. Press the **Source** button to switch to TV mode.
2. Press the **Favorites** button to view a list of your saved favorites.

Setting the Clock

1. Press the **Setup** button to access the setup menu.
2. Press the **Arrow** (◀ ▶) buttons to highlight the **Time** icon, and press the **Enter** button.
3. Press the **Arrow** (▲ ▼) buttons to highlight **Time Zone**, and press the **Arrow** (◀ ▶) buttons to select your current time zone.
4. Press the **Arrow**(▲ ▼) buttons to highlight **Auto Clock**, and press the **Arrow**(◀ ▶) buttons to turn auto clock on or off. When the correct time zone is set, auto clock will automatically set your clock and date for you.
5. To set the time and date manually, turn Auto Clock off, highlight **Clock** and use the **Arrow and Enter** buttons to manually set the time and date.

Mounting to a Wall

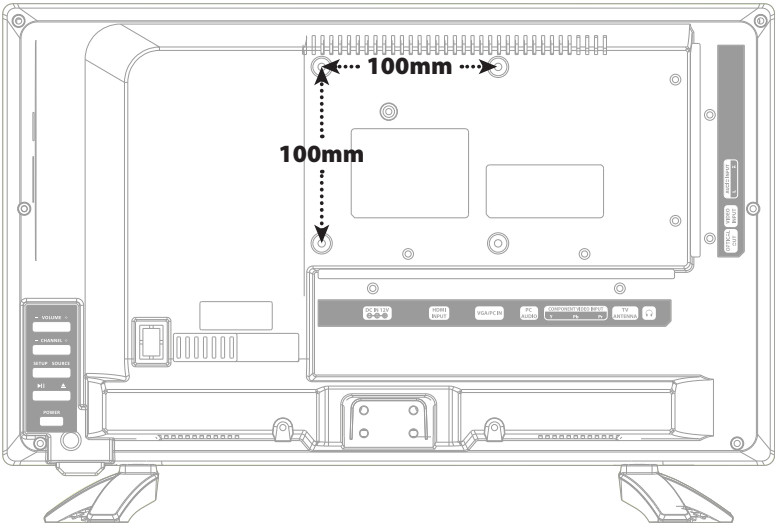

VESA Mount Specifications

- 100mm x 100mm spacing (wth. x ht.)
- M4 bolt pattern and thread pitch. A 10-15mm long bolt is recommended, depending on the thickness of the wall bracket selected.
- We strongly recommend having this television professionally mounted.

Customer Support

Contact Information

Website: www.iliveelectronics.com

Email Support: prodinfo@dpiinc.com

Email Parts: partsinfo@dpiinc.com

Phone Support: 1-888-999-4215

Warranty

For Warranty Information and the most up-to-date version of this User's Guide, go to: **www.iliveelectronics.com**

International Support

To download this User's Guide in English, Spanish, and French, or to get answers to frequently asked questions, visit the support section at: **www.iliveelectronics.com**

Para descargar este Manual del Usuario en inglés, español y francés, o para obtener respuestas a preguntas frecuentes, visite la sección de apoyo en: **www.iliveelectronics.com**

Pour télécharger ce guide de l'utilisateur en anglais, espagnol ou français, ou pour obtenir des réponses à des questions fréquemment posées, consultez la rubrique d'assistance sur: **www.iliveelectronics.com**

Made Green

Protect for Today
Sustain for Tomorrow

Copyright © 2018 Digital Products International (DPI, Inc.). All other trademarks appearing herein are the property of their respective owners. Specifications are subject to change without notice.