**Part Number:** 0345860001
**Status:** Active
**Overview:** MX123 Sealed Connection System
**Description:** MX123 0.64mm Grommet Seal Plug

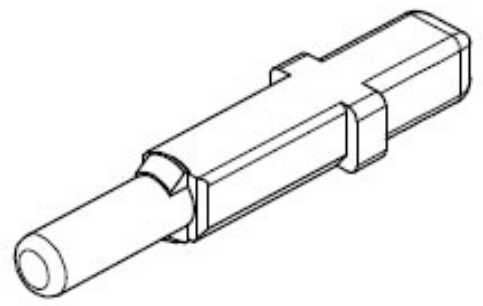

*Series image - Reference only*

**Documents:**
Drawing (PDF)
Product Specification PS-34566-0000-001 (PDF)
Packaging Specification PK-31300-348 (PDF)
RoHS Certificate of Compliance (PDF)

| | |
|---|---|
| **General** | |
| Product Family | Accessories |
| Series | 34586 |
| Component Type | Voiding Key |
| Overview | MX123 Sealed Connection System |
| Product Name | MX123 |
| UPC | 822348345656 |
| **Physical** | |
| Circuits (Loaded) | 1 |
| Circuits (maximum) | 1 |
| Color - Resin | Gray |
| Lock to Mating Part | No |
| Material - Resin | Nylon Alloy |
| Net Weight | 0.064/g |
| Packaging Type | Bag |
| **Solder Process Data** | |
| Lead-freeProcess Capability | N/A |
| **Material Info** | |
| **Reference - Drawing Numbers** | |
| Packaging Specification | PK-31300-348 |
| Product Specification | PS-34566-0000-001 |
| Sales Drawing | SD-34586-001 |

**EU ELV**
**Compliant**

**EU RoHS**
**Compliant**

**China RoHS**

**REACH SVHC**
Not Contained Per -ED/01/2018 (15 January 2018)

**Halogen-Free Status**
**Not Relevant**

**Need more information on product environmental compliance?**

Email productcompliance@molex.com
Please visit the Contact Us section for any non-product compliance questions.

| | |
|---|---|
| China ROHS | Not Relevant |
| ELV | Compliant |
| Prop65 | Missing Compliance Data |
| RoHS Phthalates | Not Contained |

**Search Parts in this Series**
34586 Series

**Use With**
MX123 Female Receptacle Housing 34566 , 34576