Long-Life DC Tubular Solenoid

GUARDIAN ELECTRIC
DIVISION OF KELCO INDUSTRIES

Model LT4x16

Features:

- Long life construction
- Plunger stop for quiet operation
- DC solenoid applications only
- UL recognized
- Stainless steel guide tube
- Teflon coated plunger

Electrical:

Coil Voltages: 6, 12, 24, 48, 110 VDC standard
Coil Termination: 6.5" Wire leads
26 AWG (standard)
Duty Cycle: 100% Continuous, 25% Intermittent,
10% Intermittent, 1% Pulse
Coil treatment: Tape Wrapped
Insulation Class: Class A Rating - 105°C (221°F)
Dielectric Strength: 1500V 60 Hz

Mechanical:

Size: 2" (L) x 0.5"(D)
Plunger Diameter: 0.203"
Plunger Guide Material: Stainless Steal
Mounting: Hex Nut
Weight: Plunger 0.3 oz, Total 1.4 oz
Life Expectancy: 10 Million Cycles[1]

[1] - Dependent on load conditions

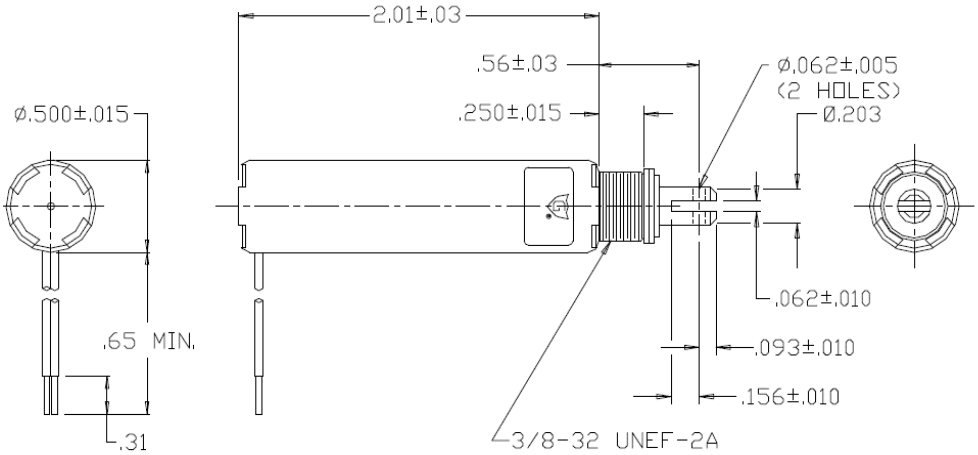

Solenoid shown energized with plunger fully seated
Supplied with mounting bracket, hex nut and lock washer shipped loose

Standard Part Numbers

Model No.	Part No.	Duty Cycle	Voltage	Resistance[2] (Ω)	Power (W)	Current
LT4x16-C-12D	A420-064826-00	Cont.	12VDC	42.5	3.6	282 mA
LT4x16-I-12D	A420-064827-00	Inter.	12VDC	14	10.8	857 mA
LT4x16-C-24D	A420-064828-00	Cont.	24VDC	168	3.6	143 mA
LT4x16-I-24D	A420-064829-00	Inter.	24VDC	69.1	8.8	347 mA

2 - Coil resistance tolerance +/- 5%

Contact us for custom voltages or duty cycles

Available Customization:

- Plunger
- Lead and Connector
- DC Voltage
- Duty Cycle
- Insulation systems up to class H 180° C (356° F)

*** Minimum quantities apply**

Typical Pull Force Ounces [N] @ 20°C (68°F) (Distance from fully seated position)								HOLDING FORCE Ounces [N]	Power (W)
Stroke (in.)	0.050	0.125	0.250	0.375	0.500	0.625	0.750		
Continuous 100%	8 [2.2]	3 [0.8]	1 [0.3]	0.5 [0.1]	N/A	N/A	N/A	13 [3.6]	3.6
Intermittent 25%	14 [3.9]	7 [1.9]	3 [0.8]	1.5 [0.4]	N/A	N/A	N/A	17 [4.7]	9.5
Intermittent 10%[3]	20 [5.6]	12 [3.3]	6 [1.7]	4.5 [1.3]	3.5 [1.]	2 [0.6]	N/A	29 [8.1]	27.4
Pulse 1%[3]	38 [10.6]	18 [5.]	11 [3.1]	7.5 [2.1]	4.5 [1.3]	3 [0.8]	1 [0.3]	N/A	65.5

Optional Return Spring Kit
A490-367460-23

Continuous Duty 100% = 100% On Time
Intermittent Duty 25% = 25% On Time (100 Seconds On Max Followed By 300 Seconds Off)
Intermittent Duty 10% = 90% On Time (10 Seconds On Max Followed By 90 Seconds Off)
Pulse Duty 1% = 99% On Time (1 Second On Max Followed By 99 Seconds Off)
[3] - Calculated force values to be verified in application

GUARDIAN-ELECTRIC.COM
1425 Lake Ave - Woodstock IL 60098 - Phone: 800-762-0369

The information is subject to change without notice. © Guardian Electric