KEMET Part Number: C1808C330KHGACTU

(C1808C330KHGAC7800)

SMD Comm C0G HV, Ceramic, 33 pF, 10%, 3000 VDC, C0G, SMD, MLCC, Ultra-Stable, Low Loss, Class I, 1808

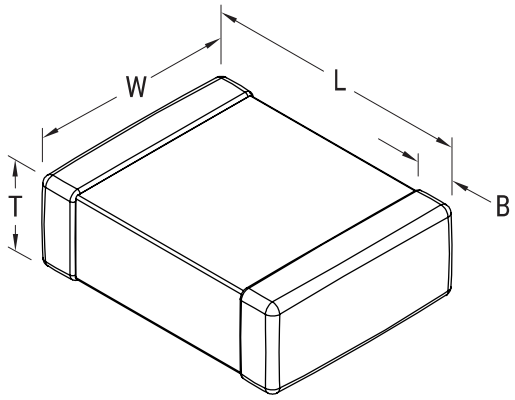

General Information	
Supplier:	KEMET
Series:	SMD Comm C0G HV
Style:	SMD Chip
Description:	SMD, MLCC, Ultra-Stable, Low Loss, Class I
Features:	Ultra-Stable, Low Loss, Class I
RoHS:	Yes
Termination:	Tin
Marking:	No
Chip Size:	1808

Dimensions	
L	4.7mm +/-0.5mm
W	2mm +/-0.2mm
T	1.6mm +/-0.15mm
B	0.6mm +/-0.35mm

Specifications	
Capacitance:	33 pF
Capacitance Tolerance:	10%
Voltage DC:	3000 VDC
Dielectric Withstanding Voltage:	3,600 V
Temperature Range:	-55/+125C
Temperature Coefficient:	C0G
Dissipation Factor:	0.10% 1MHz 25C
Aging Rate:	0% Loss/Decade Hour
Insulation Resistance:	100 GOhms

Packaging Specifications	
Packaging:	T&R, 180mm, Plastic Tape
Packaging Quantity:	1000

Statements of suitability for certain applications are based on our knowledge of typical operating conditions for such applications, but are not intended to constitute - and we specifically disclaim - any warranty concerning suitability for a specific customer application or use. This Information is intended for use only by customers who have the requisite experience and capability to determine the correct products for their application. Any technical advice inferred from this Information or otherwise provided by us with reference to the use of our products is given gratis, and we assume no obligation or liability for the advice given or results obtained.

© 2006 - 2019 KEMET