PART NO.	REVISIONS								
2MJ-0401A110	ECN #	REV	DESCRIPTION	DRAWN	DATE	CHECKD	DATE	APPRVD	DATE
	-	1.1	RELEASED	AB	14/02/14	ER	14/02/14	ER	14/02/14

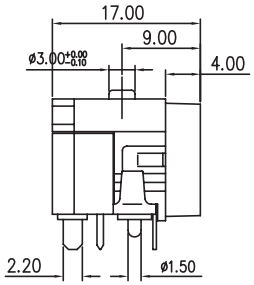

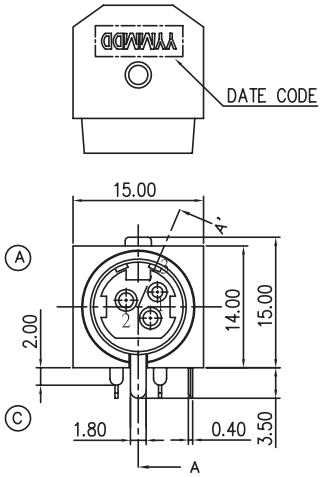

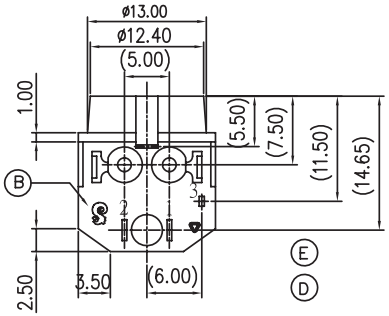

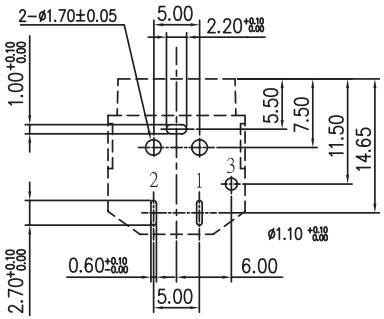

PCB LAYOUT
(SOLDER SIDE)
TOLERANCE: ±0.05

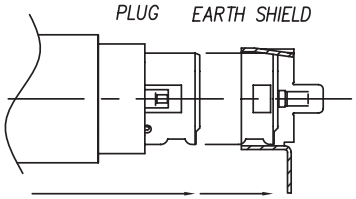

A–A' SECTION OF EARTH SHIELD

Dimensions : Millimetres

Specifications:

Gender	: Socket
Current Rating	: 7.5A
Connector Mounting	: PCB
Contact Termination	: PCB
Colour	: Black
Connector Body Material	: Metal
Connector Type	: Circular
Contact Material	: Brass
Contact Plating	: Tin
Insulation Resistance	: 50mΩ
Mounting Type	: PCB Through Hole
No. of Contacts	: 3
Solder Heat Resistance	: Wave Soldering 260°C 10 secs.

For Wave Soldering Lead-Free Process

No	Description	Qty	Material	Plating & Colour
A	Body	1	PBT+15% GF	Black Colour
B	Cover	1	PBT+15% GF	Black Colour
C	Earth Shield	1	C2680-H, T = 0.4mm	Nickel Plating
D	Contact Terminal	2	C5191-H, T = 0.3mm	Silver Plating
E	Contact Terminal	1	C5191-H, 0.2T	Silver Plating

Part Number Table

Description	Part Number
Jack, DC Power, PCB, R/A, 3 Way	2MJ-0401A110

www.element14.com
www.farnell.com
www.newark.com

Important Notice : This data sheet and its contents (the "Information") belong to the members of the Premier Farnell group of companies (the "Group") or are licensed to it. No licence is granted for the use of it other than for information purposes in connection with the products to which it relates. No licence of any intellectual property rights is granted. The Information is subject to change without notice and replaces all data sheets previously supplied. The Information supplied is believed to be accurate but the Group assumes no responsibility for its accuracy or completeness, any error in or omission from it or for any use made of it. Users of this data sheet should check for themselves the Information and the suitability of the products for their purpose and not make any assumptions based on information included or omitted. Liability for loss or damage resulting from any reliance on the Information or use of it (including liability resulting from negligence or where the Group was aware of the possibility of such loss or damage arising) is excluded. This will not operate to limit or restrict the Group's liability for death or personal injury resulting from its negligence. Multicomp is the registered trademark of the Group. © Premier Farnell plc 2012.

TOLERANCES:

UNLESS OTHERWISE SPECIFIED, DIMENSIONS ARE FOR REFERENCE PURPOSES ONLY.

DRAWN BY:	DATE:
AB	14/02/14
CHECKED BY:	DATE:
ER	14/02/14
APPROVED BY:	DATE:
ER	14/02/14

DRAWING TITLE: Jack, DC Power, PCB, R/A, 3 Way

SIZE	DWG NO.	ELECTRONIC FILE	REV
A4	1876290-01	0001	1.0

SCALE: NTS | U.O.M.: mm | SHEET: 1 of 1