CUSTOMER	NEWARK(MCM)	FILE NO.	22-530

THIS DRAWING AND SPECIFICATIONS,HEREIN ARE THE CONFIDENTIAL PROPERTY OF SAMAR AND SHALL NOT BE REPRODUCED OR COPIED OR DISCLOSED IN WHOLE OR IN PART WITHOUT WRITTEN PERMISSION.

REV.	DESCRIPTION	DRAWN / DATE	APPROVED / DATE
0	INITIAL RELEASE	LIN 05/17/2019	LISA 05/17/2019

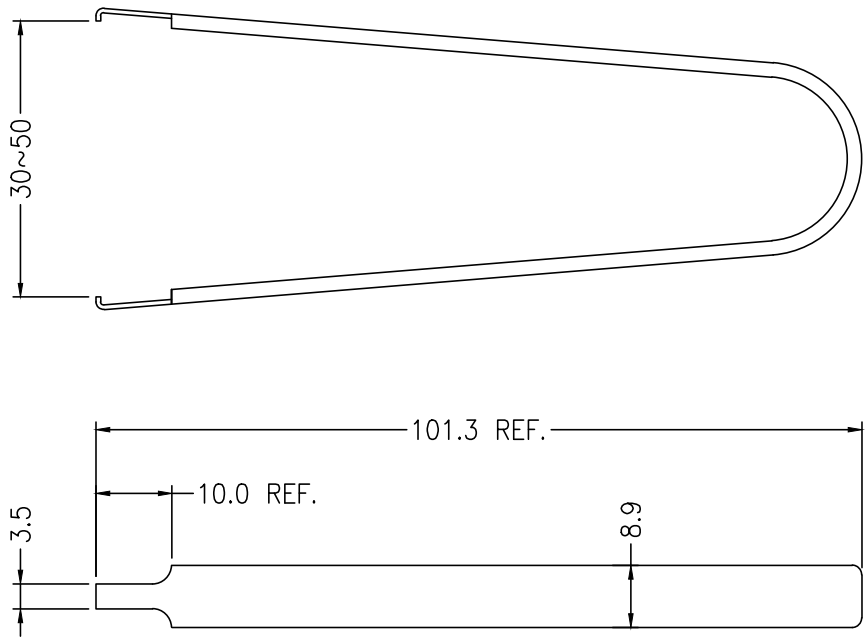

Material:
Steel, Nickel-Plated

RoHS

DIMENSIONS ARE IN mm [INCH]	TOLERANCES ARE FRACTIONS DECIMALS ANGLES	MATERIAL STEEL			P/N 22-530			DRAWN LIN	DATE 05/17/2019
MOLD NO.	.x ± 0.20 [0.008]	FINISH NICKEL-PLATED		05C3757,IC EXTRACTION TOOL	PROJECT NO.				
22-530	.xx ± 0.12 [0.005]	COLOR			SCALE 1/1	SIZE A4	SHEET 1 OF 1		MS081