Product Change Notification - SYST-14NZXM830

Date:
15 Oct 2019
Product Category:
8-bit Microcontrollers
Affected CPNs:

Notification subject:
Data Sheet - ATtiny416/816 Data Sheet
Notification text:
SYST-14NZXM830
Microchip has released a new Product Documents for the ATtiny416/816 Data Sheet of devices. If you are using one of these devices please read the document located at ATtiny416/816 Data Sheet.

Notification Status: Final

Description of Change:
1) Document: Reverted data sheet status from complete to preliminary
2) Electrical Characteristics: Removed max./min. characteristics for AC Hysteresis
5) ADC Characteristics: Added duty cycle note for clock frequencies above 1500 kHz
5) PTC Characteristics-Operating Ratings: Removed VDD and CLKPER characteristics and Added CLKADC characteristics

Impacts to Data Sheet: None

Reason for Change: To Improve Manufacturability

Change Implementation Status: Complete

Date Document Changes Effective: 15 Oct 2019

NOTE: Please be advised that this is a change to the document only the product has not been changed.

Markings to Distinguish Revised from Unrevised Devices: N/A
Attachment(s):
ATtiny416/816 Data Sheet

Please contact your local Microchip sales office with questions or concerns regarding this notification.

Terms and Conditions:

If you wish to receive Microchip PCNs via email please register for our PCN email service at our PCN home page select register then fill in the required fields. You will find instructions about registering for Microchips PCN email service in the PCN FAQ section.
If you wish to change your PCN profile, including opt out, please go to the PCN home page select login and sign into your myMicrochip account. Select a profile option from the left navigation bar and

make the applicable selections.

Affected Catalog Part Numbers (CPN)

ATTINY416-MBT-V01
ATTINY416-MBT-VAO
ATTINY416-MFR
ATTINY416-MNR
ATTINY416-MZT-V03
ATTINY416-MZT-VAO
ATTINY416-SF
ATTINY416-SFR
ATTINY416-SN
ATTINY416-SNR
ATTINY816-MBT-V02
ATTINY816-MBT-V06
ATTINY816-MBT-V07
ATTINY816-MBT-VAO
ATTINY816-MF
ATTINY816-MFR
ATTINY816-MN
ATTINY816-MNR
ATTINY816-MZT-VAO
ATTINY816-SF
ATTINY816-SFR
ATTINY816-SN
ATTINY816-SNR

ATtiny416/816

tinyAVR® 1-series

Introduction

The ATtiny416/816 are members of the tinyAVR® 1-series of microcontrollers, using the AVR® processor with hardware multiplier, running at up to 20 MHz, with 4/8 KB Flash, 256/512 bytes of SRAM, and 128 bytes of EEPROM in a 20-pin package. The tinyAVR® 1-series uses the latest technologies with a flexible, low-power architecture including Event System and SleepWalking, accurate analog features, and Core Independent Peripherals. Capacitive touch interfaces with driven shield are supported with the integrated QTouch® peripheral touch controller.(1)

Attention: Automotive products are documented in separate data sheets.

Features

- CPU
  - AVR® CPU
  - Running at up to 20 MHz
  - Single-cycle I/O access
  - Two-level interrupt controller
  - Two-cycle hardware multiplier
- Memories
  - 4/8 KB In-system self-programmable Flash memory
  - 128B EEPROM
  - 256/512B SRAM
  - Write/erase endurance:
    - Flash: 10,000 cycles
    - EEPROM: 100,000 cycles
  - Data retention: 40 years at 55°C
- System
  - Power-on Reset (POR)
  - Brown-out Detector (BOD)
  - Clock options:
    - 16/20 MHz low-power internal RC oscillator
    - 32.768 kHz Ultra Low-Power (ULP) internal RC oscillator
    - 32.768 kHz external crystal oscillator
    - External clock input
  - Single-pin Unified Program and Debug Interface (UPDI)
  - Three sleep modes:
    - Idle with all peripherals running for immediate wake-up
    - Standby

        - Configurable operation of selected peripherals
        - SleepWalking peripherals
    - Power-Down with full data retention
- Peripherals
    - One 16-bit Timer/Counter Type A (TCA) with a dedicated period register and three compare channels
    - One 16-bit Timer/Counter Type B (TCB) with input capture
    - One 12-bit Timer/Counter Type D (TCD) optimized for control applications
    - One 16-bit Real-Time Counter (RTC) running from external crystal or internal RC oscillator
    - Watchdog Timer (WDT) with Window mode, with a separate on-chip oscillator
    - One USART with fractional baud rate generator, auto-baud, and start-of-frame detection
    - One master/slave Serial Peripheral Interface (SPI)
    - One Two-Wire Interface (TWI) with dual address match
        - Philips I^2C compatible
        - Standard mode (Sm, 100 kHz)
        - Fast mode (Fm, 400 kHz)
        - Fast mode plus (Fm+, 1 MHz)
    - One Analog Comparator (AC) with a low propagation delay
    - One 10-bit 115 ksps Analog-to-Digital Converter (ADC)
    - One 8-bit Digital-to-Analog Converter (DAC)
    - Multiple voltage references (VREF):
        - 0.55V
        - 1.1V
        - 1.5V
        - 2.5V
        - 4.3V
    - Event System (EVSYS) for CPU independent and predictable inter-peripheral signaling
    - Configurable Custom Logic (CCL) with two programmable look-up tables
    - Automated CRC memory scan (CRCSCAN)
    - Peripheral Touch Controller (PTC)[(1)]
        - Capacitive touch buttons, sliders, wheels and 2D surfaces
        - Wake-up on touch
        - Driven shield for improved moisture and noise handling performance
        - Up to six self capacitance channels
        - Up to nine mutual capacitance channels
    - External interrupt on all general purpose pins
- I/O and Packages:
    - 18 programmable I/O lines
    - 20-pin VQFN 3x3 mm
    - 20-pin SOIC300
- Temperature Ranges:
    - -40°C to 105°C
    - -40°C to 125°C
- Speed Grades:
    - 0-5 MHz @ 1.8V – 5.5V
    - 0-10 MHz @ 2.7V – 5.5V
    - 0-20 MHz @ 4.5V – 5.5V

Note:

1. Only available in devices with 8 KB Flash.

Table of Contents

Introduction....1

Features....1

1. Silicon Errata and Data Sheet Clarification Document....10

2. tinyAVR® 1-series Overview....11
   2.1. Configuration Summary....11

3. Block Diagram....13

4. Pinout....15
   4.1. 20-pin SOIC....15
   4.2. 20-pin VQFN....16

5. I/O Multiplexing and Considerations....17
   5.1. Multiplexed Signals....17

6. Memories....18
   6.1. Overview....18
   6.2. Memory Map....19
   6.3. In-System Reprogrammable Flash Program Memory....19
   6.4. SRAM Data Memory....20
   6.5. EEPROM Data Memory....20
   6.6. User Row....20
   6.7. Signature Bytes....20
   6.8. I/O Memory....21
   6.9. FUSES - Configuration and User Fuses....23

7. Peripherals and Architecture....42
   7.1. Peripheral Module Address Map....42
   7.2. Interrupt Vector Mapping....43
   7.3. SYSCFG - System Configuration....44

8. AVR CPU....47
   8.1. Features....47
   8.2. Overview....47
   8.3. Architecture....47
   8.4. ALU - Arithmetic Logic Unit....49
   8.5. Functional Description....49
   8.6. Register Summary - CPU....54
   8.7. Register Description....54

9. NVMCTRL - Non Volatile Memory Controller....58
   9.1. Features....58
   9.2. Overview....58
   9.3. Functional Description....59
   9.4. Register Summary - NVMCTRL....65

9.5. Register Description....65

10. CLKCTRL - Clock Controller....73
10.1. Features....73
10.2. Overview....73
10.3. Functional Description....75
10.4. Register Summary - CLKCTRL....80
10.5. Register Description....80

11. SLPCTRL - Sleep Controller....90
11.1. Features....90
11.2. Overview....90
11.3. Functional Description....91
11.4. Register Summary - SLPCTRL....94
11.5. Register Description....94

12. RSTCTRL - Reset Controller....96
12.1. Features....96
12.2. Overview....96
12.3. Functional Description....96
12.4. Register Summary - RSTCTRL....99
12.5. Register Description....99

13. CPUINT - CPU Interrupt Controller....102
13.1. Features....102
13.2. Overview....102
13.3. Functional Description....104
13.4. Register Summary - CPUINT....109
13.5. Register Description....109

14. EVSYS - Event System....114
14.1. Features....114
14.2. Overview....114
14.3. Functional Description....117
14.4. Register Summary - EVSYS....119
14.5. Register Description....119

15. PORTMUX - Port Multiplexer....126
15.1. Overview....126
15.2. Register Summary - PORTMUX....127
15.3. Register Description....127

16. PORT - I/O Pin Configuration....132
16.1. Features....132
16.2. Overview....132
16.3. Functional Description....134
16.4. Register Summary - PORT....138
16.5. Register Description - Ports....138
16.6. Register Summary - VPORT....150

16.7. Register Description - Virtual Ports 150

17. BOD - Brownout Detector 155
17.1. Features 155
17.2. Overview 155
17.3. Functional Description 157
17.4. Register Summary - BOD 159
17.5. Register Description 159

18. VREF - Voltage Reference 166
18.1. Features 166
18.2. Overview 166
18.3. Functional Description 166
18.4. Register Summary - VREF 167
18.5. Register Description 167

19. WDT - Watchdog Timer 170
19.1. Features 170
19.2. Overview 170
19.3. Functional Description 172
19.4. Register Summary - WDT 175
19.5. Register Description 175

20. TCA - 16-bit Timer/Counter Type A 178
20.1. Features 178
20.2. Overview 178
20.3. Functional Description 182
20.4. Register Summary - TCA in Normal Mode (CTRLD.SPLITM=0) 191
20.5. Register Description - Normal Mode 191
20.6. Register Summary - TCA in Split Mode (CTRLD.SPLITM=1) 211
20.7. Register Description - Split Mode 211

21. TCB - 16-bit Timer/Counter Type B 227
21.1. Features 227
21.2. Overview 227
21.3. Functional Description 229
21.4. Register Summary - TCB 237
21.5. Register Description 237

22. TCD - 12-bit Timer/Counter Type D 248
22.1. Features 248
22.2. Overview 248
22.3. Functional Description 251
22.4. Register Summary - TCD 272
22.5. Register Description 272

23. RTC - Real Time Counter 292
23.1. Features 292
23.2. Overview 292

23.3. RTC Functional Description 294
23.4. PIT Functional Description 295
23.5. Events 295
23.6. Interrupts 296
23.7. Sleep Mode Operation 296
23.8. Synchronization 296
23.9. Configuration Change Protection 297
23.10. Register Summary - RTC 298
23.11. Register Description 298

24. USART - Universal Synchronous and Asynchronous Receiver and Transmitter 314
24.1. Features 314
24.2. Overview 314
24.3. Functional Description 317
24.4. Register Summary - USART 330
24.5. Register Description 330

25. SPI - Serial Peripheral Interface 346
25.1. Features 346
25.2. Overview 346
25.3. Functional Description 349
25.4. Register Summary - SPI 356
25.5. Register Description 356

26. TWI - Two Wire Interface 362
26.1. Features 362
26.2. Overview 362
26.3. Functional Description 364
26.4. Register Summary - TWI 376
26.5. Register Description 376

27. CRCSCAN - Cyclic Redundancy Check Memory Scan 393
27.1. Features 393
27.2. Overview 393
27.3. Functional Description 395
27.4. Register Summary - CRCSCAN 398
27.5. Register Description 398

28. CCL – Configurable Custom Logic 402
28.1. Features 402
28.2. Overview 402
28.3. Functional Description 404
28.4. Register Summary - CCL 413
28.5. Register Description 413

29. AC – Analog Comparator 420
29.1. Features 420
29.2. Overview 420
29.3. Functional Description 422

29.4. Register Summary - AC 424
29.5. Register Description 424

30. ADC - Analog to Digital Converter 429
30.1. Features 429
30.2. Overview 429
30.3. Functional Description 433
30.4. Register Summary - ADC 440
30.5. Register Description 440

31. DAC - Digital to Analog Converter 458
31.1. Features 458
31.2. Overview 458
31.3. Functional Description 459
31.4. Register Summary - DAC 461
31.5. Register Description 461

32. PTC - Peripheral Touch Controller 464
32.1. Features 464
32.2. Overview 464
32.3. Functional Description 467

33. UPDI - Unified Program and Debug Interface 468
33.1. Features 468
33.2. Overview 468
33.3. Functional Description 470
33.4. Register Summary - UPDI 488
33.5. Register Description 488

34. Electrical Characteristics 499
34.1. Disclaimer 499
34.2. Absolute Maximum Ratings 499
34.3. General Operating Ratings 499
34.4. Power Consumption for ATtiny416 501
34.5. Power Consumption for ATtiny816 502
34.6. Wake-Up Time 503
34.7. Peripherals Power Consumption 504
34.8. BOD and POR Characteristics 505
34.9. External Reset Characteristics 505
34.10. Oscillators and Clocks 506
34.11. I/O Pin Characteristics 507
34.12. USART 509
34.13. SPI 510
34.14. TWI 511
34.15. Bandgap and VREF 513
34.16. ADC 514
34.17. DAC 516
34.18. AC 517
34.19. PTC 517

34.20. UPDI Timing....518
34.21. Programming Time....519

35. Typical Characteristics....520
35.1. Power Consumption....520
35.2. GPIO....535
35.3. VREF Characteristics....543
35.4. BOD Characteristics....545
35.5. ADC Characteristics....548
35.6. AC Characteristics....553
35.7. OSC20M Characteristics....555
35.8. OSCULP32K Characteristics....557
35.9. TWI SDA Hold timing for ATtiny816....558
35.10. PTC Characteristics for ATtiny816....558

36. Ordering Information....561
36.1. Product Information....561
36.2. Product Identification System....561

37. Packaging Information....562
37.1. Package Drawings....562
37.2. Thermal Considerations....570

38. Instruction Set Summary....571

39. Conventions....576
39.1. Numerical Notation....576
39.2. Memory Size and Type....576
39.3. Frequency and Time....576
39.4. Registers and Bits....577

40. Acronyms and Abbreviations....578

41. Errata....580
41.1. Errata - ATtiny416/816....580

42. Datasheet Revision History....581
42.1. Rev. C - 10/2019....581
42.2. Rev. B - 07/2019....581
42.3. Rev. A - 01/2017....582

The Microchip Website....583

Product Change Notification Service....583

Customer Support....583

Microchip Devices Code Protection Feature....583

Legal Notice....583

Trademarks....584

Quality Management System..... 584

Worldwide Sales and Service.....585

1. Silicon Errata and Data Sheet Clarification Document

Our intention is to provide our customers with the best documentation possible to ensure successful use of Microchip products. Between data sheet updates, a Silicon Errata and Data Sheet Clarification Document will contain the most recent information for the data sheet. The ATtiny416/816 Silicon Errata and Data Sheet Clarification Document is available at the device product page on https://www.microchip.com.

2. tinyAVR® 1-series Overview

The figure below shows the tinyAVR® 1-series devices, laying out pin count variants and memory sizes:

- Vertical migration upwards is possible without code modification, as these devices are pin compatible and provide the same or more features. Downward migration may require code modification due to fewer available instances of some peripherals.
- Horizontal migration to the left reduces the pin count and therefore, the available features.

Figure 2-1. tinyAVR® 1-series Overview

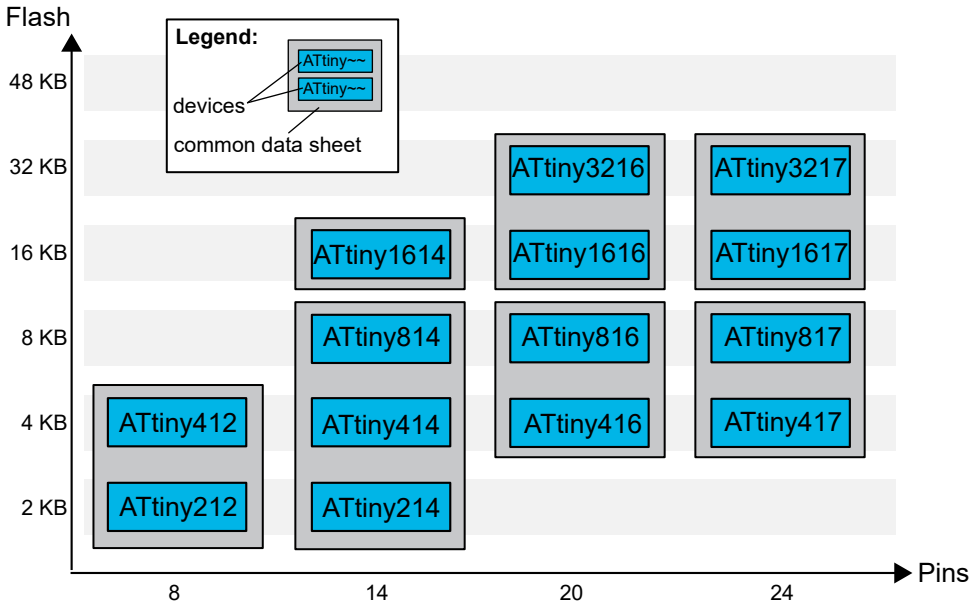

Devices with different Flash memory size typically also have different SRAM and EEPROM.

2.1 Configuration Summary

2.1.1 Peripheral Summary

Table 2-1. Peripheral Summary

	ATtiny416	ATtiny816
Pins	20	20
SRAM	256B	512B
Flash	4 KB	8 KB
EEPROM	128B	128B
Max. frequency (MHz)	20	20
16-bit Timer/Counter type A (TCA)	1	1
16-bit Timer/Counter type B (TCB)	1	1
12-bit Timer/Counter type D (TCD)	1	1
Real-Time Counter (RTC)	1	1
USART	1	1
SPI	1	1

.....continued

	ATtiny416	ATtiny816
TWI (I^2C)	1	1
ADC	1	1
ADC channels	12	12
DAC	1	1
AC	1	1
Peripheral Touch Controller (PTC)(1)	No	1
PTC number of self capacitance channels(1)	-	6
PTC number of mutual capacitance channels(1)	-	9
Configurable Custom Logic	1	1
Window Watchdog	1	1
Event System channels	6	6
General purpose I/O	18	18
External interrupts	18	18
CRCSCAN	1	1

Note:

1. The PTC takes control over the ADC while the PTC is used.

3. Block Diagram

Figure 3-1. ATtiny416 Block Diagram

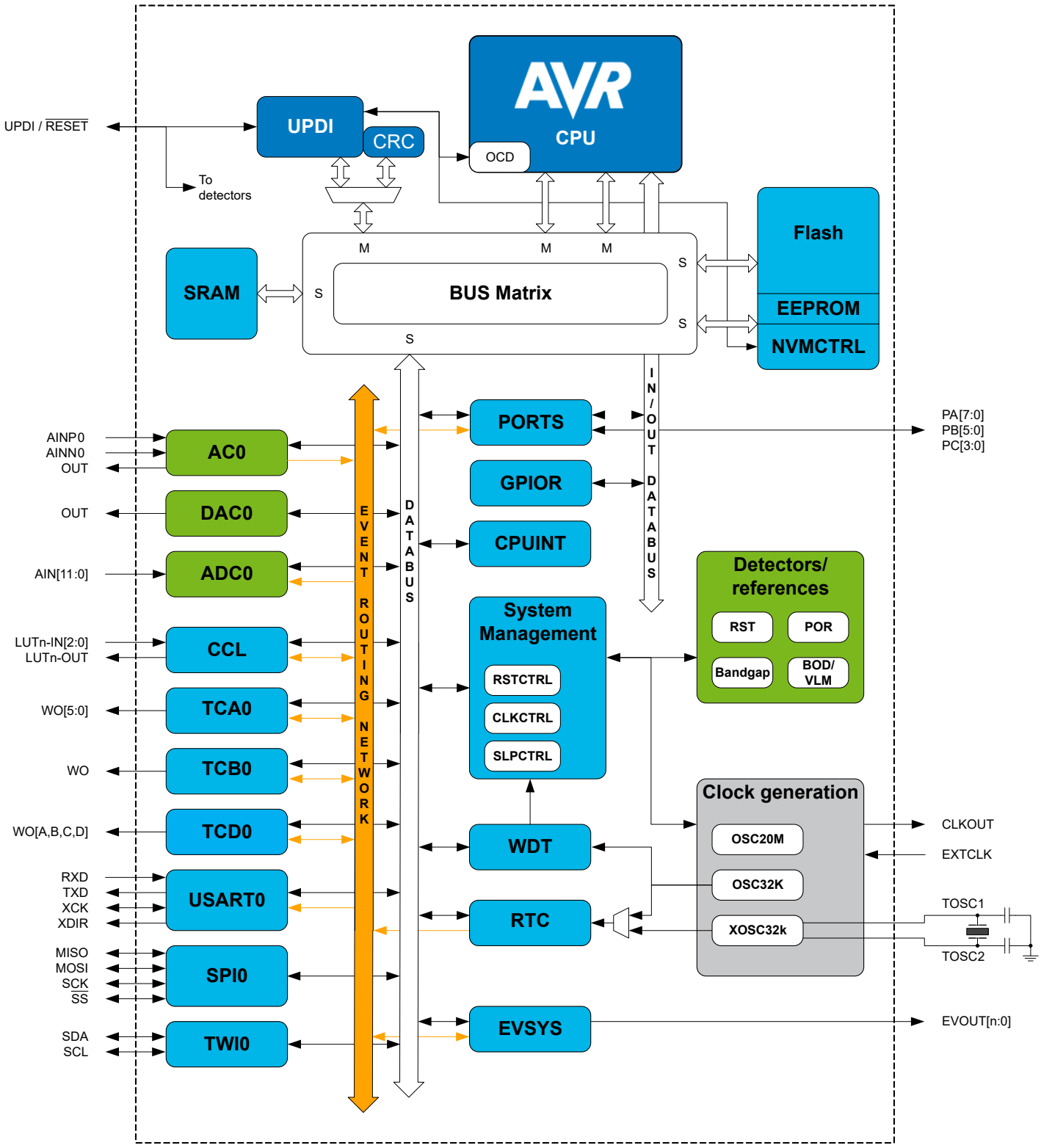

Figure 3-2. ATtiny816 Block Diagram

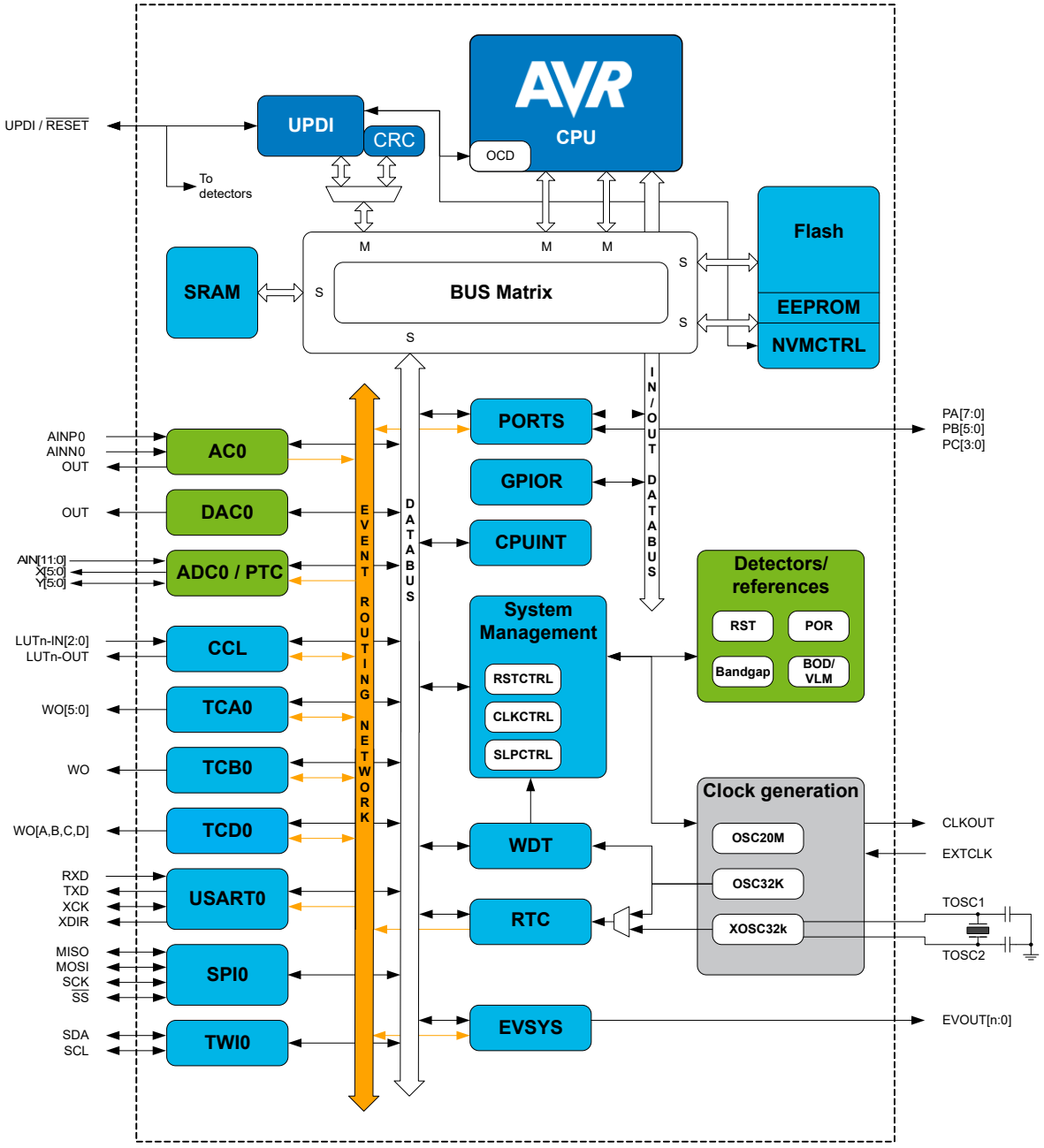

4. Pinout

4.1 20-pin SOIC

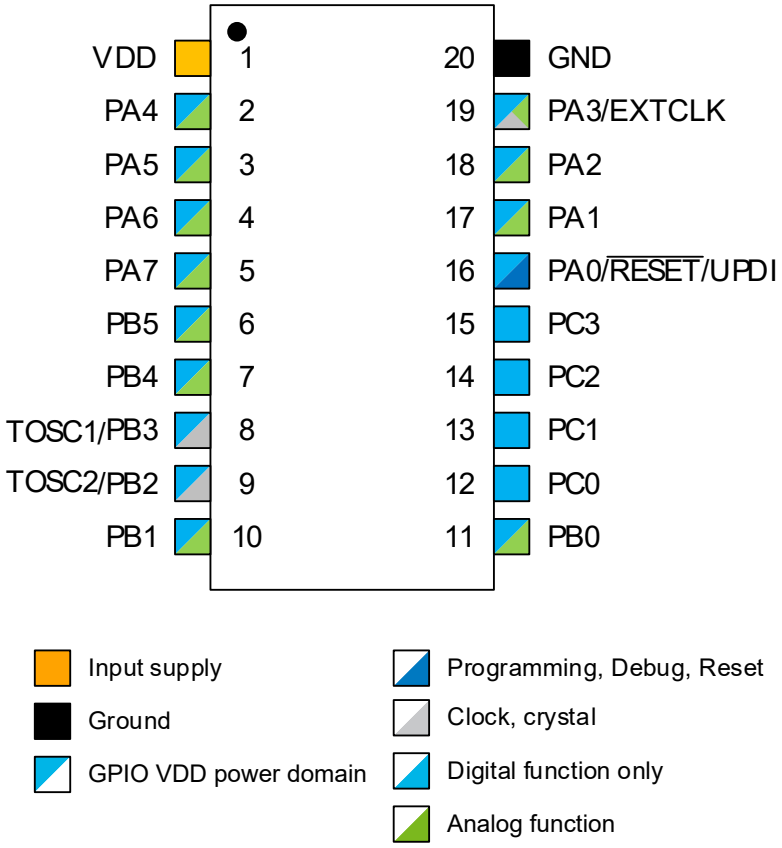

4.2 20-pin VQFN

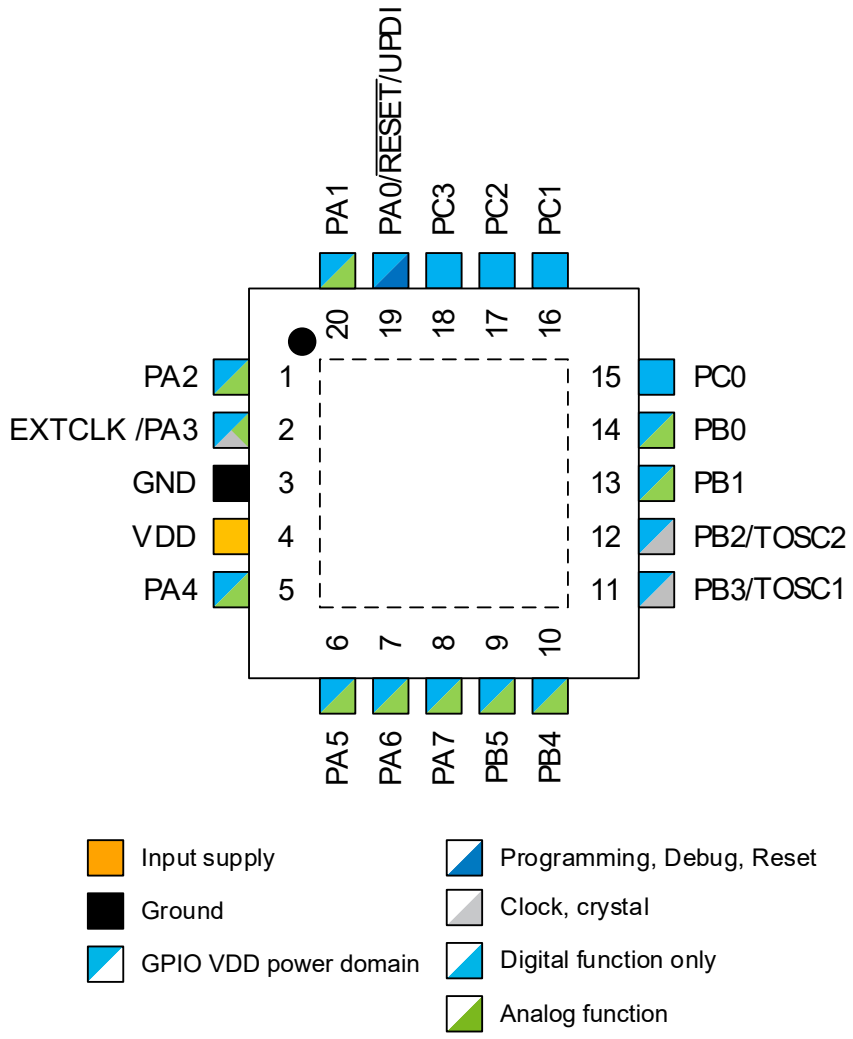

5. I/O Multiplexing and Considerations

5.1 Multiplexed Signals

Table 5-1. PORT Function Multiplexing

VQFN 20-Pin	SOIC 20-Pin	Pin Name (1,2)	Other/Special	ADC0	PTC(4)	AC0	DAC0	USART0	SPI0	TWI0	TCA0	TCB0	TCD0	CCL
19	16	PA0	$\overline{\text{RESET}}$/ UPDI	AIN0										LUT0-IN0
20	17	PA1		AIN1				TxD(3)	MOSI	SDA(3)				LUT0-IN1
1	18	PA2	EVOUT0	AIN2				RxD(3)	MISO	SCL(3)				LUT0-IN2
2	19	PA3	EXTCLK	AIN3				XCK(3)	SCK		WO3			
3	20	GND												
4	1	VDD												
5	2	PA4		AIN4	X0/Y0			XDIR(3)	$\overline{\text{SS}}$		WO4		WOA	LUT0-OUT
6	3	PA5		AIN5	X1/Y1	OUT					WO5	WO	WOB	
7	4	PA6		AIN6	X2/Y2	AINN0	OUT							
8	5	PA7		AIN7	X3/Y3	AINP0								LUT1-OUT
9	6	PB5	CLKOUT	AIN8		AINP1					WO2(3)			
10	7	PB4		AIN9		AINN1					WO1(3)			LUT0-OUT(3)
11	8	PB3	TOSC1					RxD			WO0(3)			
12	9	PB2	TOSC2, EVOUT1					TxD			WO2			
13	10	PB1		AIN10	X4/Y4			XCK		SDA	WO1			
14	11	PB0		AIN11	X5/Y5			XDIR		SCL	WO0			
15	12	PC0							SCK(3)			WO(3)	WOC	
16	13	PC1							MISO(3)				WOD	LUT1-OUT(3)
17	14	PC2	EVOUT2						MOSI(3)					
18	15	PC3							$\overline{\text{SS}}$(3)		WO3(3)			LUT1-IN0

Note:

1. Pin names are of type P*xn*, with *x* being the PORT instance (A, B) and *n* the pin number. Notation for signals is PORT*x*_PIN*n*. All pins can be used as event input.
2. All pins can be used for external interrupt, where pins P*x*2 and P*x*6 of each port have full asynchronous detection.
3. Alternate pin positions. For selecting the alternate positions, refer to the PORTMUX documentation.
4. PTC is only available in devices with 8 KB Flash (ATtiny816). Every PTC line can be configured as X- or Y-line.

6. Memories

6.1 Overview

The main memories are SRAM data memory, EEPROM data memory, and Flash program memory. In addition, the peripheral registers are located in the I/O memory space.

Table 6-1. Physical Properties of Flash Memory

Property	ATtiny416	ATtiny816
Size	4KB	8KB
Page size	64B	64B
Number of pages	64	128
Start address	0x8000	0x8000

Table 6-2. Physical Properties of SRAM

Property	ATtiny416	ATtiny816
Size	256B	512B
Start address	0x3F00	0x3E00

Table 6-3. Physical Properties of EEPROM

Property	ATtiny416	ATtiny816
Size	128B	128B
Page size	32B	32B
Number of pages	4	4
Start address	0x1400	0x1400

Related Links

6.8 I/O Memory

6.2 Memory Map

Figure 6-1. Memory Map: Flash 4/8KB, Internal SRAM 256/512B, EEPROM 128B

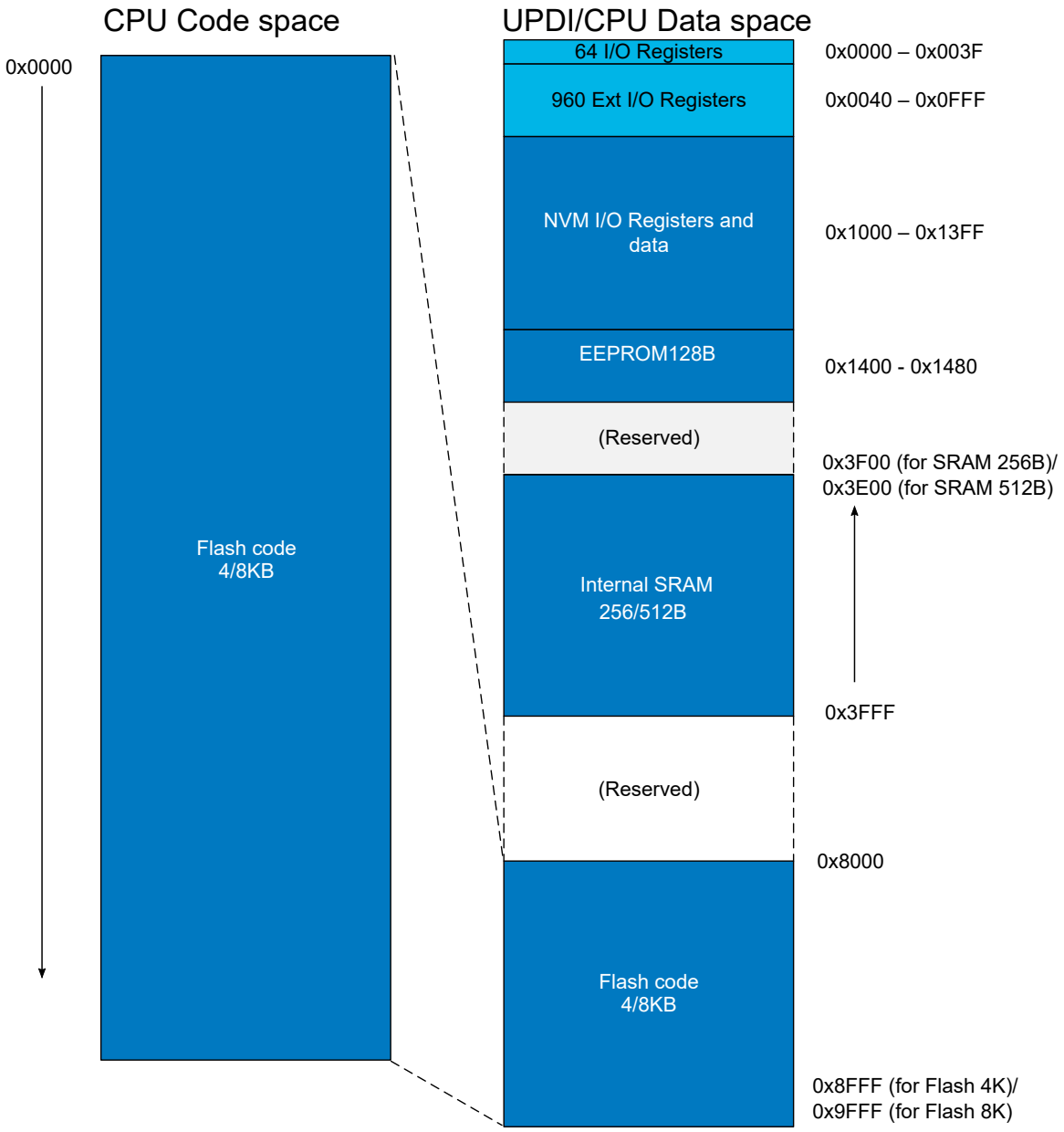

6.3 In-System Reprogrammable Flash Program Memory

The ATtiny416/816 contains 4/8KB On-Chip In-System Reprogrammable Flash memory for program storage. Since all AVR instructions are 16 or 32 bits wide, the Flash is organized as 4K x 16. For write protection, the Flash Program memory space can be divided into three sections: Boot Loader section, Application code section and Application data section, with restricted access rights among them.

The program counter is 11/12 bits wide to address the whole program memory. The procedure for writing Flash memory is described in detail in the documentation of the Non-Volatile Memory Controller (NVMCTRL) peripheral.

The entire Flash memory is mapped in the memory space and is accessible with normal LD/ST instructions as well as the LPM instruction. For LD/ST instructions, the Flash is mapped from address 0x8000. For the LPM instruction, the Flash start address is 0x0000.

The ATtiny416/816 also has a CRC module that is a master on the bus. If the CRC is configured to run in the background it will read the Flash memory and can affect the program timing.

Related Links

2.1 Configuration Summary

9. NVMCTRL - Non Volatile Memory Controller

6.4 SRAM Data Memory

The 256B/512B SRAM is used for data storage and stack.

Related Links

8. AVR CPU

8.5.4 Stack and Stack Pointer

6.5 EEPROM Data Memory

The ATtiny416/816 has 128 bytes of EEPROM data memory, see Memory Map. The EEPROM memory supports single byte read and write. The EEPROM is controlled by the Non-Volatile Memory Controller (NVMCTRL).

Related Links

6.2 Memory Map

9. NVMCTRL - Non Volatile Memory Controller

6.6 User Row

In addition to the EEPROM, the ATtiny416/816 has one extra page of EEPROM memory that can be used for firmware settings, the User Row (USERROW). This memory supports single byte read and write as the normal EEPROM. The CPU can write and read this memory as normal EEPROM and the UPDI can write and read it as a normal EEPROM memory if the part is unlocked. The User Row can also be written by the UPDI when the part is locked. USERROW is not affected by a chip erase.

Related Links

6.2 Memory Map

9. NVMCTRL - Non Volatile Memory Controller

33. UPDI - Unified Program and Debug Interface

6.7 Signature Bytes

All Atmel microcontrollers have a three-byte signature code which identifies the device. This code can be read in both serial and parallel mode, also when the device is locked. The three bytes reside in a separate address space. For the device the signature bytes are given in the following table.

Table 6-4. Device ID

Device Name	Signature Bytes Address		
	0x00	0x01	0x02
ATtiny416	0x1E	0x92	0x21
ATtiny816	0x1E	0x93	0x21

6.8 I/O Memory

All ATtiny416/816 I/Os and peripherals are located in the I/O space. The I/O address range from 0x00 to 0x3F can be accessed in a single cycle using IN and OUT instructions. The Extended I/O space from 0x0040 - 0x0FFF can be accessed by the LD/LDS/LDD and ST/STS/STD instructions, transferring data between the 32 general purpose working registers and the I/O space.

I/O Registers within the address range 0x00 - 0x1F are directly bit-accessible using the SBI and CBI instructions. In these registers, the value of single bits can be checked by using the SBIS and SBIC instructions. Refer to the Instruction Set section for more details.

For compatibility with future devices, reserved bits should be written to zero if accessed. Reserved I/O memory addresses should never be written.

Some of the interrupt flags are cleared by writing a '1' to them. On ATtiny416/816 devices, the CBI and SBI instructions will only operate on the specified bit, and can therefore be used on registers containing such interrupt flags. The CBI and SBI instructions work with registers 0x00 - 0x1F only.

General Purpose I/O Registers

The ATtiny416/816 devices provide four General Purpose I/O Registers. These registers can be used for storing any information, and they are particularly useful for storing global variables and interrupt flags. General Purpose I/O Registers, which recide in the address range 0x1C - 0x1F, are directly bit-accessible using the SBI, CBI, SBIS, and SBIC instructions.

Related Links

6.2 Memory Map
7.1 Peripheral Module Address Map
38. Instruction Set Summary

6.8.1 Register Summary - GPIOR

Offset	Name	Bit Pos.								
0x00	GPIOR0	7:0	GPIOR[7:0]							
0x01	GPIOR1	7:0	GPIOR[7:0]							
0x02	GPIOR2	7:0	GPIOR[7:0]							
0x03	GPIOR3	7:0	GPIOR[7:0]							

6.8.2 Register Description - GPIOR

6.8.2.1 General Purpose I/O register n

Name: GPIOR
Offset: 0x00 + n*0x01 [n=0..3]
Reset: 0x00
Property: -

These are general purpose registers that can be used to store data, such as global variables and flags, in the bitaccessible I/O memory space.

Bit	7	6	5	4	3	2	1	0
	GPIOR[7:0]							
Access	R/W	R/W	R/W	R/W	R/W	R/W	R/W	R/W
Reset	0	0	0	0	0	0	0	0

Bits 7:0 – GPIOR[7:0] GPIO Register byte

6.9 FUSES - Configuration and User Fuses

Fuses are part of the non-volatile memory and holds factory calibration data and device configuration. The fuses are available from device power-up. The fuses can be read by the CPU or the UPDI, but can only be programmed or cleared by the UPDI. The configuration and calibration values stored in the fuses are written to their respective target registers at the end of the start-up sequence.

The content of the Signature Row fuses (SIGROW) is pre-programmed, and cannot be altered. SIGROW holds information such as device ID, serial number, and calibration values.

The fuses for peripheral configuration (FUSE) are pre-programmed, but can be altered by the user. Altered values in the configuration fuses will be effective only after a Reset.

This device also provides a User Row fuse area (USERROW) that can hold application data. The USERROW can be programmed on a locked device by the UPDI. This can be used for final configuration without having programming or debugging capabilities enabled.

Related Links

6.9.2 Signature Row Description
6.9.4 Fuse Description

6.9.1 Signature Row Summary - SIGROW

Offset	Name	Bit Pos.									
0x00	DEVICEID0	7:0	DEVICEID[7:0]								
0x01	DEVICEID1	7:0	DEVICEID[7:0]								
0x02	DEVICEID2	7:0	DEVICEID[7:0]								
0x03	SERNUM0	7:0	SERNUM[7:0]								
0x04	SERNUM1	7:0	SERNUM[7:0]								
0x05	SERNUM2	7:0	SERNUM[7:0]								
0x06	SERNUM3	7:0	SERNUM[7:0]								
0x07	SERNUM4	7:0	SERNUM[7:0]								
0x08	SERNUM5	7:0	SERNUM[7:0]								
0x09	SERNUM6	7:0	SERNUM[7:0]								
0x0A	SERNUM7	7:0	SERNUM[7:0]								
0x0B	SERNUM8	7:0	SERNUM[7:0]								
0x0C	SERNUM9	7:0	SERNUM[7:0]								
0x0D ... 0x1F	Reserved										
0x20	TEMPSENSE0	7:0	TEMPSENSE[7:0]								
0x21	TEMPSENSE1	7:0	TEMPSENSE[7:0]								
0x22	OSC16ERR3V	7:0	OSC16ERR3V[7:0]								
0x23	OSC16ERR5V	7:0	OSC16ERR5V[7:0]								
0x24	OSC20ERR3V	7:0	OSC20ERR3V[7:0]								
0x25	OSC20ERR5V	7:0	OSC20ERR5V[7:0]								

6.9.2 Signature Row Description

6.9.2.1 Device ID n

Name: DEVICEIDn
Offset: 0x00 + n*0x01 [n=0..2]
Reset: [Device ID]
Property: -

Each device has a Device ID, identifying the device and its properties, such as memory sizes, pin count, and die revision. This can be used to identify a device and hence, the available features by software. The Device ID consists of three bytes: SIGROW.DEVICEID[2:0].

Bit	7	6	5	4	3	2	1	0
	DEVICEID[7:0]							
Access	R	R	R	R	R	R	R	R
Reset	x	x	x	x	x	x	x	x

Bits 7:0 – DEVICEID[7:0] Byte n of the Device ID

6.9.2.2 Serial Number Byte n

Name: SERNUMn
Offset: 0x03 + n*0x01 [n=0..9]
Reset: [device serial number]
Property: -

Each device has an individual serial number, representing a unique ID. This can be used to identify a specific device in the field. The serial number consists of ten bytes: SIGROW.SERNUM[9:0].

Bit	7	6	5	4	3	2	1	0
	SERNUM[7:0]							
Access	R	R	R	R	R	R	R	R
Reset	x	x	x	x	x	x	x	x

Bits 7:0 – SERNUM[7:0] Serial Number Byte n

6.9.2.3 Temperature Sensor Calibration n

Name: TEMPSENSEn
Offset: 0x20 + n*0x01 [n=0..1]
Reset: [Temperature sensor calibration value]
Property: -

These registers contain correction factors for temperature measurements by the ADC. SIGROW.TEMPSENSE0 is a correction factor for the gain/slope (unsigned), SIGROW.TEMPSENSE1 is a correction factor for the offset (signed).

Bit	7	6	5	4	3	2	1	0
	TEMPSENSE[7:0]							
Access	R	R	R	R	R	R	R	R
Reset	0	0	0	0	0	0	0	0

Bits 7:0 – TEMPSENSE[7:0] Temperature Sensor Calibration Byte n
Refer to 30.3.2.6 Temperature Measurement for how to use the values; 6.9.2 Signature Row Description section for location of values.

6.9.2.4 OSC16 error at 3V

Name: OSC16ERR3V
Offset: 0x22
Reset: [Oscillator frequency error value]
Property: -

Bit	7	6	5	4	3	2	1	0
	OSC16ERR3V[7:0]							
Access	R	R	R	R	R	R	R	R
Reset	0	0	0	0	0	0	0	0

Bits 7:0 – OSC16ERR3V[7:0] OSC16 error at 3V
This registers contain the signed oscillator frequency error value when running at internal 16MHz at 3V, as measured during production.

6.9.2.5 OSC16 error at 5V

Name: OSC16ERR5V
Offset: 0x23
Reset: [Oscillator frequency error value]
Property: -

Bit	7	6	5	4	3	2	1	0
	OSC16ERR5V[7:0]							
Access	R	R	R	R	R	R	R	R
Reset	0	0	0	0	0	0	0	0

Bits 7:0 – OSC16ERR5V[7:0] OSC16 error at 5V
This registers contain the signed oscillator frequency error value when running at internal 16MHz at 5V, as measured during production.

6.9.2.6 OSC20 error at 3V

Name: OSC20ERR3V
Offset: 0x24
Reset: [Oscillator frequency error value]
Property: -

Bit	7	6	5	4	3	2	1	0
	OSC20ERR3V[7:0]							
Access	R	R	R	R	R	R	R	R
Reset	0	0	0	0	0	0	0	0

Bits 7:0 – OSC20ERR3V[7:0] OSC20 error at 3V
This registers contain the signed oscillator frequency error value when running at internal 20MHz at 3V, as measured during production.

6.9.2.7 OSC20 error at 5V

Name: OSC20ERR5V
Offset: 0x25
Reset: [Oscillator frequency error value]
Property: -

Bit	7	6	5	4	3	2	1	0
	OSC20ERR5V[7:0]							
Access	R	R	R	R	R	R	R	R
Reset	0	0	0	0	0	0	0	0

Bits 7:0 – OSC20ERR5V[7:0] OSC20 error at 5V
This registers contain the signed oscillator frequency error value when running at internal 20MHz at 5V, as measured during production.

6.9.3 Fuse Summary - FUSE

Offset	Name	Bit Pos.								
0x00	WDTCFG	7:0	WINDOW[3:0]				PERIOD[3:0]			
0x01	BODCFG	7:0	LVL[2:0]			SAMPFREQ	ACTIVE[1:0]		SLEEP[1:0]	
0x02	OSCCFG	7:0	OSCLOCK						FREQSEL[1:0]	
0x03	Reserved									
0x04	TCD0CFG	7:0	CMPDEN	CMPCEN	CMPBEN	CMPAEN	CMPD	CMPC	CMPB	CMPA
0x05	SYSCFG0	7:0	CRCSRC[1:0]				RSTPINCFG[1:0]			EESAVE
0x06	SYSCFG1	7:0						SUT[2:0]		
0x07	APPEND	7:0	APPEND[7:0]							
0x08	BOOTEND	7:0	BOOTEND[7:0]							
0x09	Reserved									
0x0A	LOCKBIT	7:0	LOCKBIT[7:0]							

6.9.4 Fuse Description

6.9.4.1 Watchdog Configuration

Name: WDTCFG
Offset: 0x00
Reset: -
Property: -

Bit	7	6	5	4	3	2	1	0
	WINDOW[3:0]				PERIOD[3:0]			
Access	R	R	R	R	R	R	R	R
Reset	0	0	0	0	0	0	0	0

Bits 7:4 – WINDOW[3:0] Watchdog Window Timeout Period
This value is loaded into the WINDOW bit field of the Watchdog Control A register (WDT.CTRLA) during Reset.

Bits 3:0 – PERIOD[3:0] Watchdog Timeout Period
This value is loaded into the PERIOD bit field of the Watchdog Control A register (WDT.CTRLA) during Reset.

Related Links

19.4 Register Summary - WDT
12. RSTCTRL - Reset Controller

6.9.4.2 BOD Configuration

Name: BODCFG
Offset: 0x01
Reset: -
Property: -

The settings of the BOD will be reloaded from this Fuse after a Power-on Reset. For all other Resets, the BOD configuration remains unchanged.

Bit	7	6	5	4	3	2	1	0
	LVL[2:0]			SAMPFREQ	ACTIVE[1:0]		SLEEP[1:0]	
Access	R	R	R	R	R	R	R	R
Reset	0	0	0	0	0	0	0	0

Bits 7:5 – LVL[2:0] BOD Level
This value is loaded into the LVL bit field of the BOD Control B register (BOD.CTRLB) during Reset.

Value	Name	Description
0x0	BODLEVEL0	1.8V
0x2	BODLEVEL2	2.6V
0x7	BODLEVEL7	4.2V

Note:
- Values in the description are typical values.
- Refer to the *BOD and POR Characteristics* in *Electrical Characteristics* for maximum and minimum values.

Bit 4 – SAMPFREQ BOD Sample Frequency
This value is loaded into the SAMPFREQ bit of the BOD Control A register (BOD.CTRLA) during Reset.

Value	Description
0x0	Sample frequency is 1 kHz
0x1	Sample frequency is 125 Hz

Bits 3:2 – ACTIVE[1:0] BOD Operation Mode in Active and Idle
This value is loaded into the ACTIVE bit field of the BOD Control A register (BOD.CTRLA) during Reset.

Value	Description
0x0	Disabled
0x1	Enabled
0x2	Sampled
0x3	Enabled with wake-up halted until BOD is ready

Bits 1:0 – SLEEP[1:0] BOD Operation Mode in Sleep
This value is loaded into the SLEEP bit field of the BOD Control A register (BOD.CTRLA) during Reset.

Value	Description
0x0	Disabled
0x1	Enabled
0x2	Sampled
0x3	Reserved

Related Links
17.4 Register Summary - BOD
12. RSTCTRL - Reset Controller

6.9.4.3 Oscillator Configuration

Name: OSCCFG
Offset: 0x02
Reset: -
Property: -

Bit	7	6	5	4	3	2	1	0
	OSCLOCK						FREQSEL[1:0]	
Access	R						R	R
Reset	0						1	0

Bit 7 – OSCLOCK Oscillator Lock
This fuse bit is loaded to LOCK in CLKCTRL.OSC20MCALIBB during reset.

Value	Description
0	Calibration registers of the 20 MHz oscillator are accessible
1	Calibration registers of the 20 MHz oscillator are locked

Bits 1:0 – FREQSEL[1:0] Frequency Select
These bits selects the operation frequency of the 16/20MHz internal oscillator (OSC20M), and determine the respective factory calibration values to be written to CAL20M in CLKCTRL.OSC20MCALIBA and TEMPCAL20M in CLKCTRL.OSC20MCALIBB.

Value	Description
0x1	Run at 16MHz with corresponding factory calibration
0x2	Run at 20MHz with corresponding factory calibration
Other	Reserved

Related Links

10.4 Register Summary - CLKCTRL
12. RSTCTRL - Reset Controller

6.9.4.4 Timer Counter Type D Configuration

Name: TCD0CFG
Offset: 0x04
Reset: -
Property: -

The bit values of this fuse register are written to the corresponding bits in the TCD.FAULTCTRL register of TCD0 at start-up.
The CMPEN and CMP settings of the TCD will only be reloaded from the FUSE values after a Power-On Reset. For all other resets the corresponding TCD settings of the device will remain unchanged.

Bit	7	6	5	4	3	2	1	0
	CMPDEN	CMPCEN	CMPBEN	CMPAEN	CMPD	CMPC	CMPB	CMPA
Access	R	R	R	R	R	R	R	R
Reset	0	0	0	0	0	0	0	0

Bits 4, 5, 6, 7 – CMPEN Compare x Enable

Value	Description
0	Compare x output on Pin is disabled
1	Compare x output on Pin is enabled

Bits 0, 1, 2, 3 – CMP Compare x
This bit selects the default state of Compare x after Reset, or when entering debug if FAULTDET is '1'.

Value	Description
0	Compare x default state is 0
1	Compare x default state is 1

Related Links
22.4 Register Summary - TCD
12. RSTCTRL - Reset Controller

6.9.4.5 System Configuration 0

Name: SYSCFG0
Offset: 0x05
Reset: 0xC4
Property: -

Bit	7	6	5	4	3	2	1	0
	CRCSRC[1:0]				RSTPINCFG[1:0]			EESAVE
Access	R	R			R	R		R
Reset	1	1			0	1		0

Bits 7:6 – CRCSRC[1:0] CRC Source
See the CRC description for more information about the functionality.

Value	Name	Description
00	FLASH	CRC of full Flash (boot, application code and application data)
01	BOOT	CRC of the boot section
10	BOOTAPP	CRC of application code and boot sections
11	NOCRC	No CRC

Bits 3:2 – RSTPINCFG[1:0] Reset Pin Configuration
These bits select the Reset/UPDI pin configuration.

Value	Description
0x0	GPIO
0x1	UPDI
0x2	RESET
0x3	Reserved

Note: When configuring the Reset Pin as GPIO, there is a potential conflict between the GPIO actively driving the output, and a 12V UPDI enable sequence initiation. To avoid this, the GPIO output driver is disabled for 768 OSC32K cycles after a System Reset. Enable any interrupts for this pin only after this period.

Bit 0 – EESAVE EEPROM Save During Chip Erase
If the device is locked, the EEPROM is always erased by a chip erase, regardless of this bit.

Value	Description
0	EEPROM erased during chip erase
1	EEPROM not erased under chip erase

6.9.4.6 System Configuration 1

Name: SYSCFG1
Offset: 0x06
Reset: -
Property: -

Bit	7	6	5	4	3	2	1	0
						SUT[2:0]		
Access						R	R	R
Reset						1	1	1

Bits 2:0 – SUT[2:0] Start Up Time Setting
These bits selects the start-up time between power-on and code execution.

Value	Description
0x0	0ms
0x1	1ms
0x2	2ms
0x3	4ms
0x4	8ms
0x5	16ms
0x6	32ms
0x7	64ms

6.9.4.7 Application Code End

Name: APPEND
Offset: 0x07
Reset: -
Property: -

Bit	7	6	5	4	3	2	1	0
	APPEND[7:0]							
Access	R	R	R	R	R	R	R	R
Reset	0	0	0	0	0	0	0	0

Bits 7:0 – APPEND[7:0] Application Code Section End
These bits set the end of the application code section in blocks of 256 bytes. The end of the application code section should be set as BOOT size + application code size. The remaining Flash will be application data. A value of 0x00 defines the Flash from BOOTEND*256 to end of Flash as application code. When both FUSE.APPEND and FUSE.BOOTEND are 0x00, the entire Flash is BOOT section.

Related Links

9. NVMCTRL - Non Volatile Memory Controller

9.3.1.1 Flash

6.9.4.8 Boot End

Name: BOOTEND
Offset: 0x08
Reset: -
Property: -

Bit	7	6	5	4	3	2	1	0
	BOOTEND[7:0]							
Access	R	R	R	R	R	R	R	R
Reset	0	0	0	0	0	0	0	0

Bits 7:0 – BOOTEND[7:0] Boot Section End
These bits set the end of the boot section in blocks of 256 bytes. A value of 0x00 defines the whole Flash as BOOT section. When both FUSE.APPEND and FUSE.BOOTEND are 0x00, the entire Flash is BOOT section.

Related Links

9. NVMCTRL - Non Volatile Memory Controller

9.3.1.1 Flash

6.9.4.9 Lock Bits

Name: LOCKBIT
Offset: 0x0A
Reset: -
Property: -

Bit	7	6	5	4	3	2	1	0
	LOCKBIT[7:0]							
Access	R/W	R/W	R/W	R/W	R/W	R/W	R/W	R/W
Reset	0	0	0	0	0	0	0	0

Bits 7:0 – LOCKBIT[7:0] Lock Bits
When the part is locked, UPDI cannot access the system bus, so it cannot read out anything but CS-space.

Value	Description
0xC5	The device is open
other	The device is locked

7. Peripherals and Architecture

7.1 Peripheral Module Address Map

The address map show the base address for each peripheral. For complete register description and summary for each peripheral module, refer to the respective module chapters.

Table 7-1. Peripheral Module Address Map

Base Address	Name	Description
0x0000	VPORTA	Virtual Port A
0x0004	VPORTB	Virtual Port B
0x0008	VPORTC	Virtual Port C
0x001C	GPIO	General Purpose IO registers
0x0030	CPU	CPU
0x0040	RSTCTRL	Reset Controller
0x0050	SLPCTRL	Sleep Controller
0x0060	CLKCTRL	Clock Controller
0x0080	BOD	Brown-Out Detector
0x00A0	VREF	Voltage Reference
0x0100	WDT	Watchdog Timer
0x0110	CPUINT	Interrupt Controller
0x0120	CRCSCAN	Cyclic Redundancy Check Memory Scan
0x0140	RTC	Real Time Counter
0x0180	EVSYS	Event System
0x01C0	CCL	Configurable Custom Logic
0x0200	PORTMUX	Port Multiplexer
0x0400	PORTA	Port A Configuration
0x0420	PORTB	Port B Configuration
0x0440	PORTC	Port C Configuration
0x0600	ADC0	Analog to Digital Converter/Peripheral Touch Controller
0x06A0	DAC0	Digital to Analog Converter 0
0x0670	AC0	Analog Comparator
0x0680	DAC0	Digital to Analog Converter
0x0800	USART0	Universal Synchronous Asynchronous Receiver Transmitter
0x0810	TWI0	Two Wire Interface
0x0820	SPI0	Serial Peripheral Interface
0x0A00	TCA0	Timer/Counter Type A instance 0
0x0A40	TCB0	Timer/Counter Type B instance 0

.....continued		
Base Address	**Name**	**Description**
0x0A80	TCD0	Timer/Counter Type D instance 0
0x0F00	SYSCFG	System Configuration
0x1000	NVMCTRL	Non Volatile Memory Controller
0x1100	SIGROW	Signature Row
0x1280	FUSES	Device specific fuses
0x1300	USERROW	User Row

7.2 Interrupt Vector Mapping

Each of the 26 interrupt vectors is connected to one peripheral instance, as shown in the table below. A peripheral can have one or more interrupt sources, see the 'Interrupt' section in the 'Functional Description' of the respective peripheral for more details on the available interrupt sources.

When the interrupt condition occurs, an Interrupt Flag (*name*IF) is set in the Interrupt Flags register of the peripheral (*peripheral*.INTFLAGS).

An interrupt is enabled or disabled by writing to the corresponding Interrupt Enable bit (*name*IE) in the peripheral's Interrupt Control register (*peripheral*.INTCTRL).

The naming of the registers may vary slightly in some peripherals.

An interrupt request is generated when the corresponding interrupt is enabled and the Interrupt Flag is set. The interrupt request remains active until the Interrupt Flag is cleared. See the peripheral's INTFLAGS register for details on how to clear Interrupt Flags.

Interrupts must be enabled globally for interrupt requests to be generated.

Table 7-2. Interrupt Vector Mapping

Vector Number	Peripheral Source	Definition
0	RESET	RESET
1	CRCSCAN_NMI	NMI - Non-Maskable Interrupt from CRC
2	BOD_VLM	VLM - Voltage Level Monitor
3	PORTA_PORT	PORTA - Port A
4	PORTB_PORT	PORTB - Port B
5	PORTC_PORT	PORTC - Port C
6	RTC_CNT	RTC - Real Time Counter
7	RTC_PIT	PIT - Periodic Interrupt Timer (in RTC peripheral)
8	TCA0_LUNF / TCA0_OVF	TCA0 - Timer Counter Type A, LUNF / OVF
9	TCA0_HUNF	TCA0, HUNF
10	TCA0_LCMP0 / TCA0_CMP0	TCA0, LCMP0 / CMP0
11	TCA0_LCMP1 / TCA0_CMP1	TCA0, LCMP1 / CMP1
12	TCA0_CMP2 / TCA0_LCMP2	TCA0, LCMP2 / CMP2
13	TCB0_INT	TCB0 - Timer Counter Type B
14	TCD0_OVF	TCD0 - Timer Counter Type D, OVF

.....continued

Vector Number	Peripheral Source	Definition
15	TCD0_TRIG	TCD0, TRIG
16	AC0_AC	AC0 – Analog Comparator
17	ADC0_RESRDY	ADC0 – Analog-to-Digital Converter, RESRDY
18	ADC0_WCOMP	ADC0, WCOMP
19	TWI0_TWIS	TWI0 - Two Wire Interface / I2C, TWIS
20	TWI0_TWIM	TWI0, TWIM
21	SPI0_INT	SPI0 - Serial Peripheral Interface
22	USART0_RXC	USART0 - Universal Asynchronous Receiver-Transmitter, RXC
23	USART0_DRE	USART0, DRE
24	USART0_TXC	USART0, TXC
25	NVMCTRL_EE	NVM - Non Volatile Memory

Related Links

9. NVMCTRL - Non Volatile Memory Controller
16. PORT - I/O Pin Configuration
23. RTC - Real Time Counter
25. SPI - Serial Peripheral Interface
24. USART - Universal Synchronous and Asynchronous Receiver and Transmitter
26. TWI - Two Wire Interface
27. CRCSCAN - Cyclic Redundancy Check Memory Scan
20. TCA - 16-bit Timer/Counter Type A
21. TCB - 16-bit Timer/Counter Type B
22. TCD - 12-bit Timer/Counter Type D
29. AC – Analog Comparator
30. ADC - Analog to Digital Converter

7.3 SYSCFG - System Configuration

The System Configuration contains the revision ID of the part. The Revision ID is readable from the CPU, making it useful for implementing application changes between part revisions.

7.3.1 Register Summary - SYSCFG

Offset	Name	Bit Pos.								
0x00	Reserved									
0x01	REVID	7:0	REVID[7:0]							

7.3.2 Register Description - SYSCFG

7.3.2.1 Device Revision ID Register

Name: REVID
Offset: 0x01
Reset: [revision ID]
Property: -

This register is read only and give the device revision ID.

Bit	7	6	5	4	3	2	1	0
	REVID[7:0]							
Access	R	R	R	R	R	R	R	R
Reset								

Bits 7:0 – REVID[7:0] Revision ID
These bits contain the device revision. 0x00 = A, 0x01 = B, and so on.

8. AVR CPU

8.1 Features

- 8-bit, high-performance AVR RISC CPU
  - 135 instructions
  - Hardware multiplier
- 32 8-bit registers directly connected to the ALU
- Stack in RAM
- Stack pointer accessible in I/O memory space
- Direct addressing of up to 64KB of unified memory
  - Entire Flash accessible with all LD/ST instructions
- True 16-bit access to 16-bit I/O registers
- Efficient support for 8-, 16-, and 32-bit arithmetic
- Configuration Change Protection for system-critical features

8.2 Overview

All AVR devices use the 8-bit AVR CPU. The CPU is able to access memories, perform calculations, control peripherals, and execute instructions in the program memory. Interrupt handling is described in a separate section.

Related Links

6. Memories
9. NVMCTRL - Non Volatile Memory Controller
13. CPUINT - CPU Interrupt Controller

8.3 Architecture

In order to maximize performance and parallelism, the AVR CPU uses a Harvard architecture with separate buses for program and data. Instructions in the program memory are executed with single-level pipelining. While one instruction is being executed, the next instruction is pre-fetched from the program memory. This enables instructions to be executed on every clock cycle.

Figure 8-1. AVR CPU Architecture

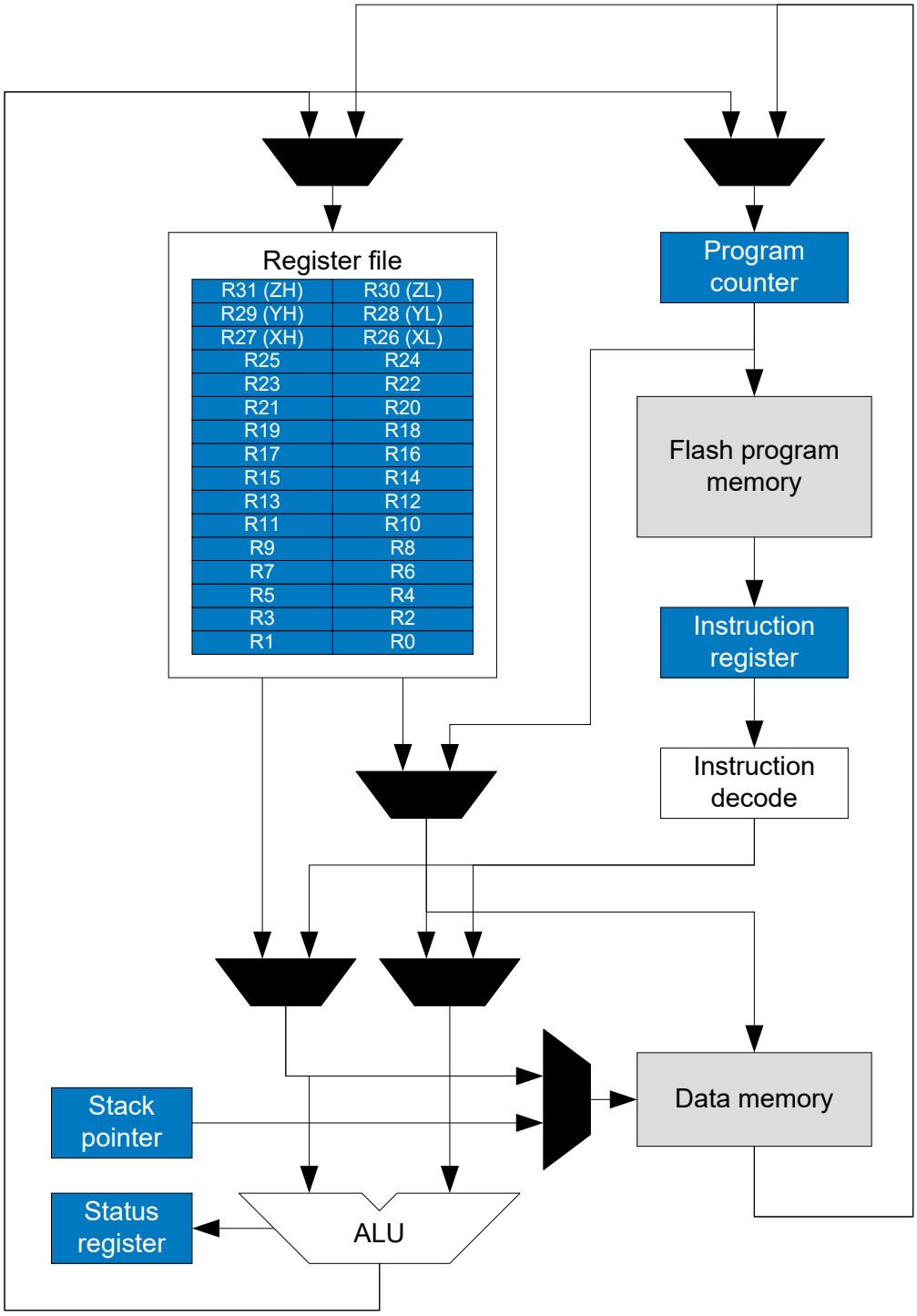

The Arithmetic Logic Unit (ALU) supports arithmetic and logic operations between registers or between a constant and a register. Single-register operations can also be executed in the ALU. After an arithmetic operation, the status register is updated to reflect information about the result of the operation.

The ALU is directly connected to the fast-access register file. The 32 8-bit general purpose working registers all have single clock cycle access time allowing single-cycle arithmetic logic unit operation between registers or between a register and an immediate. Six of the 32 registers can be used as three 16-bit address pointers for program and data space addressing, enabling efficient address calculations.

The program memory bus is connected to Flash, and the first program memory Flash address is 0x0000.

The data memory space is divided into I/O registers, SRAM, EEPROM and Flash.

All I/O status and control registers reside in the lowest 4KB addresses of the data memory. This is referred to as the I/O memory space. The lowest 64 addresses are accessed directly with single cycle IN/OUT instructions, or as the data space locations from 0x00 to 0x3F. These addresses can also be accessed using load (LD/LDS/LDD) and store (ST/STS/STD) instructions. The lowest 32 addresses can even be accessed with single cycle SBI/CBI instructions and SBIS/SBIC instructions. The rest is the extended I/O memory space, ranging from 0x0040 to 0x0FFF. I/O registers here must be accessed as data space locations using load and store instructions.

Data addresses 0x1000 to 0x1800 are reserved for memory mapping of fuses, the NVM controller and EEPROM. The addresses from 0x1800 to 0x7FFF are reserved for other memories, such as SRAM.

The Flash is mapped in the data space from 0x8000 and above. The Flash can be accessed with all load and store instructions by using addresses above 0x8000. The LPM instruction accesses the Flash as in the code space, where the Flash starts at address 0x0000.

For a summary of all AVR instructions, refer to the *Instruction Set Summary*. For details of all AVR instructions, refer to http://www.microchip.com/design-centers/8-bit.

Related Links

9. NVMCTRL - Non Volatile Memory Controller
6. Memories
38. Instruction Set Summary

8.4 ALU - Arithmetic Logic Unit

The Arithmetic Logic Unit supports arithmetic and logic operations between registers, or between a constant and a register. Single-register operations can also be executed.

The ALU operates in direct connection with all 32 general purpose registers. Arithmetic operations between general purpose registers or between a register and an immediate are executed in a single clock cycle, and the result is stored in the register file. After an arithmetic or logic operation, the Status register (CPU.SREG) is updated to reflect information about the result of the operation.

ALU operations are divided into three main categories – arithmetic, logical, and bit functions. Both 8- and 16-bit arithmetic is supported, and the instruction set allows for efficient implementation of 32-bit arithmetic. The hardware multiplier supports signed and unsigned multiplication and fractional format.

8.4.1 Hardware Multiplier

The multiplier is capable of multiplying two 8-bit numbers into a 16-bit result. The hardware multiplier supports different variations of signed and unsigned integer and fractional numbers:

- Multiplication of signed/unsigned integers
- Multiplication of signed/unsigned fractional numbers
- Multiplication of a signed integer with an unsigned integer
- Multiplication of a signed fractional number with an unsigned one

A multiplication takes two CPU clock cycles.

8.5 Functional Description

8.5.1 Program Flow

After Reset, the CPU will execute instructions from the lowest address in the Flash program memory, 0x0000. The program counter (PC) address the next instruction to be fetched.

Program flow is supported by conditional and unconditional jump and call instructions, capable of addressing the whole address space directly. Most AVR instructions use a 16-bit word format, and a limited number uses a 32-bit format.

During interrupts and subroutine calls, the return address PC is stored on the stack as a word pointer. The stack is allocated in the general data SRAM, and consequently the stack size is only limited by the total SRAM size and the usage of the SRAM. After Reset, the stack pointer (SP) points to the highest address in the internal SRAM. The SP is read/write accessible in the I/O memory space, enabling easy implementation of multiple stacks or stack areas. The data SRAM can easily be accessed through the five different addressing modes supported by the AVR CPU.

8.5.2 Instruction Execution Timing

The AVR CPU is clocked by the CPU clock, CLK_CPU. No internal clock division is applied. The Figure below shows the parallel instruction fetches and instruction executions enabled by the Harvard architecture and the fast-access register file concept. This is the basic pipelining concept enabling up to 1MIPS/MHz performance with high efficiency.

Figure 8-2. The Parallel Instruction Fetches and Instruction Executions

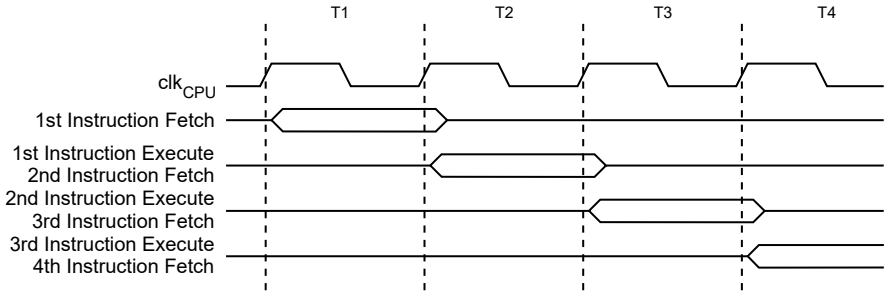

The following Figure shows the internal timing concept for the register file. In a single clock cycle, an ALU operation using two register operands is executed, and the result is stored in the destination register.

Figure 8-3. Single Cycle ALU Operation

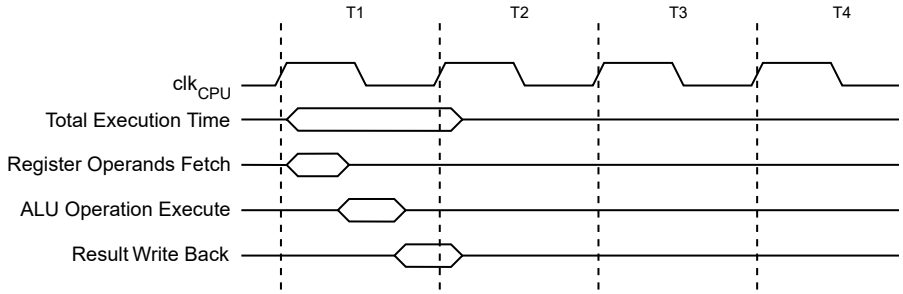

8.5.3 Status Register

The Status register (CPU.SREG) contains information about the result of the most recently executed arithmetic or logic instruction. This information can be used for altering program flow in order to perform conditional operations.

CPU.SREG is updated after all ALU operations, as specified in the Instruction Set Summary. This will in many cases remove the need for using the dedicated compare instructions, resulting in faster and more compact code. CPU.SREG is not automatically stored/restored when entering/returning from an interrupt service routine. Maintaining the status register between context switches must therefore be handled by user defined software. CPU.SREG is accessible in the I/O memory space.

Related Links

38. Instruction Set Summary

8.5.4 Stack and Stack Pointer

The Stack is used for storing return addresses after interrupts and subroutine calls. It can also be used for storing temporary data. The Stack Pointer (SP) always point to the top of the Stack. The SP is defined by the Stack Pointer bits (SP) in the Stack Pointer register (CPU.SP). CPU.SP is implemented as two 8-bit registers that are accessible in the I/O memory space.

Data is pushed and popped from the Stack using the PUSH and POP instructions. The Stack grows from higher to lower memory locations. This implies that pushing data onto the Stack decreases the SP, and popping data off the Stack increases the SP. The Stack Pointer is automatically set to the highest address of the internal SRAM after

Reset. If the Stack is changed, it must be set to point above address 0x2000, and it must be defined before both any subroutine calls are executed and before interrupts are enabled.

During interrupts or subroutine calls, the return address is automatically pushed on the Stack as a word pointer and the SP is decremented by '2'. The return address consists of two bytes and the least significant byte is pushed on the Stack first (at the higher address). As an example, a byte pointer return address of 0x0006 is saved on the Stack as 0x0003 (shifted one bit to the right), pointing to the fourth 16-bit instruction word in the program memory. The return address is popped off the Stack with RETI (when returning from interrupts) and RET (when returning from subroutine calls) and the SP is incremented by '2'.

The SP is decremented by '1' when data is pushed on the Stack with the PUSH instruction, and incremented by '1' when data is popped off the Stack using the POP instruction.

To prevent corruption when updating the Stack pointer from software, a write to SPL will automatically disable interrupts for up to four instructions or until the next I/O memory write.

8.5.5 Register File

The register file consists of 32 8-bit general purpose working registers with single clock cycle access time. The register file supports the following input/output schemes:

- One 8-bit output operand and one 8-bit result input
- Two 8-bit output operands and one 8-bit result input
- Two 8-bit output operands and one 16-bit result input
- One 16-bit output operand and one 16-bit result input

Six of the 32 registers can be used as three 16-bit address register pointers for data space addressing, enabling efficient address calculations.

Figure 8-4. AVR CPU General Purpose Working Registers

7 0	Addr.	
R0	0x00	
R1	0x01	
R2	0x02	
...		
R13	0x0D	
R14	0x0E	
R15	0x0F	
R16	0x10	
R17	0x11	
...		
R26	0x1A	X-register Low Byte
R27	0x1B	X-register High Byte
R28	0x1C	Y-register Low Byte
R29	0x1D	Y-register High Byte
R30	0x1E	Z-register Low Byte
R31	0x1F	Z-register High Byte

The register file is located in a separate address space and is therefore not accessible trough instructions operation on data memory.

8.5.5.1 The X-, Y-, and Z- Registers

Registers R26...R31 have added functions besides their general-purpose usage.

These registers can form 16-bit address pointers for addressing data memory. These three address registers are called the X-register, Y-register, and Z-register. Load and store instructions can use all X-, Y- and Z-registers, while the LPM instructions can only use the Z-register. Indirect calls and jumps (ICALL and IJMP) also use the Z-register.

Refer to the instruction set or Instruction Set Summary for more information about how the X-, Y- and Z-registers are used.

Figure 8-5. The X-, Y- and Z-registers

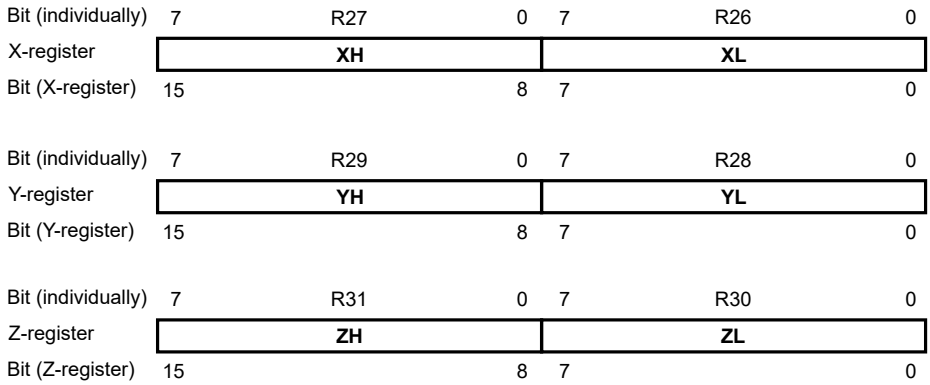

The lowest register address holds the least-significant byte (LSB), and the highest register address holds the most-significant byte (MSB). In the different addressing modes, these address registers function as fixed displacement, automatic increment, and automatic decrement.

Related Links

38. Instruction Set Summary

8.5.6 Accessing 16-bit Registers

The AVR data bus is 8 bits wide, and so accessing 16-bit registers requires atomic operations. These registers must be byte-accessed using two read or write operations. 16-bit registers are connected to the 8-bit bus and a temporary register using a 16-bit bus.

For a write operation, the low byte of the 16-bit register must be written before the high byte. The low byte is then written into the temporary register. When the high byte of the 16-bit register is written, the temporary register is copied into the low byte of the 16-bit register in the same clock cycle.

For a read operation, the low byte of the 16-bit register must be read before the high byte. When the low byte register is read by the CPU, the high byte of the 16-bit register is copied into the temporary register in the same clock cycle as the low byte is read. When the high byte is read, it is then read from the temporary register.

This ensures that the low and high bytes of 16-bit registers are always accessed simultaneously when reading or writing the register.

Interrupts can corrupt the timed sequence if an interrupt is triggered and accesses the same 16-bit register during an atomic 16-bit read/write operation. To prevent this, interrupts can be disabled when writing or reading 16-bit registers.

The temporary registers can also be read and written directly from user software.

8.5.7 CCP - Configuration Change Protection

System critical I/O register settings are protected from accidental modification. Flash self-programming (via store to NVM controller) is protected from accidental execution. This is handled globally by the configuration change protection (CCP) register.

Changes to the protected I/O registers or bits, or execution of protected instructions, are only possible after the CPU writes a signature to the CCP register. The different signatures are listed in the description of the CCP register (CPU.CCP).

There are two modes of operation: one for protected I/O registers, and one for the protected self-programming.

Related Links

8.7.1 CCP

8.5.7.1 Sequence for Write Operation to Configuration Change Protected I/O Registers

In order to write to registers protected by CCP, these steps are required:

1. The software writes the signature that enables change of protected I/O registers to the CCP bit field in the CPU.CCP register.
2. Within four instructions, the software must write the appropriate data to the protected register.

Most protected registers also contain a write enable/change enable/lock bit. This bit must be written to '1' in the same operation as the data are written.

The protected change is immediately disabled if the CPU performs write operations to the I/O register or data memory, if load or store accesses to Flash, NVMCTRL, EEPROM are conducted, or if the SLEEP instruction is executed.

8.5.7.2 Sequence for Execution of Self-Programming

In order to execute self-programming (the execution of writes to the NVM controller's command register), these steps are required:

1. The software temporary enables self-programming by writing the SPM signature to the CCP register (CPU.CCP).
2. Within four instructions, the software must execute the appropriate instruction. The protected change is immediately disabled if the CPU performs accesses to the Flash, NVMCTRL, or EEPROM, or if the SLEEP instruction is executed.

Once the correct signature is written by the CPU, interrupts will be ignored for the duration of the configuration change enable period. Any interrupt request (including non-maskable interrupts) during the CCP period will set the corresponding interrupt flag as normal, and the request is kept pending. After the CCP period is completed, any pending interrupts are executed according to their level and priority.

8.6 Register Summary - CPU

Offset	Name	Bit Pos.								
0x00 ... 0x03	Reserved									
0x04	CCP	7:0	CCP[7:0]							
0x05 ... 0x0C	Reserved									
0x0D	SP	7:0	SP[7:0]							
		15:8	SP[15:8]							
0x0F	SREG	7:0	I	T	H	S	V	N	Z	C

8.7 Register Description

8.7.1 Configuration Change Protection

Name: CCP
Offset: 0x04
Reset: 0x00
Property: -

Bit	7	6	5	4	3	2	1	0
	CCP[7:0]							
Access	R/W	R/W	R/W	R/W	R/W	R/W	R/W	R/W
Reset	0	0	0	0	0	0	0	0

Bits 7:0 – CCP[7:0] Configuration Change Protection
Writing the correct signature to this bit field allows changing protected I/O registers or executing protected instructions within the next four CPU instructions executed.
All interrupts are ignored during these cycles. After these cycles, interrupts will automatically be handled again by the CPU, and any pending interrupts will be executed according to their level and priority.
When the protected I/O register signature is written, CCP[0] will read as '1' as long as the CCP feature is enabled.
When the protected self-programming signature is written, CCP[1] will read as '1' as long as the CCP feature is enabled.
CCP[7:2] will always read as zero.

Value	Name	Description
0x9D	SPM	Allow Self-Programming
0xD8	IOREG	Un-protect protected I/O registers

8.7.2 Stack Pointer

Name: SP
Offset: 0x0D
Reset: 0xxxxx
Property: -

The CPU.SP holds the Stack Pointer (SP) that points to the top of the Stack. After Reset, the Stack Pointer points to the highest internal SRAM address.

Only the number of bits required to address the available data memory including external memory (up to 64KB) is implemented for each device. Unused bits will always read as zero.

The CPU.SPL and CPU.SPH register pair represents the 16-bit value, CPU.SP. The low byte [7:0] (suffix L) is accessible at the original offset. The high byte [15:8] (suffix H) can be accessed at offset + 0x01. For more details on reading and writing 16-bit registers, refer to 8.5.6 Accessing 16-bit Registers.

To prevent corruption when updating the Stack Pointer from software, a write to CPU.SPL will automatically disable interrupts for the next four instructions or until the next I/O memory write.

Bit	15	14	13	12	11	10	9	8
	SP[15:8]							
Access	R/W	R/W	R/W	R/W	R/W	R/W	R/W	R/W
Reset	x	x	x	x	x	x	x	x

Bit	7	6	5	4	3	2	1	0
	SP[7:0]							
Access	R/W	R/W	R/W	R/W	R/W	R/W	R/W	R/W
Reset	x	x	x	x	x	x	x	x

Bits 15:8 – SP[15:8] Stack Pointer high byte
These bits hold the MSB of the 16-bit register.

Bits 7:0 – SP[7:0] Stack Pointer low byte
These bits hold the LSB of the 16-bit register.

8.7.3 Status Register

Name: SREG
Offset: 0x0F
Reset: 0x00
Property: -

The Status register contains information about the result of the most recently executed arithmetic or logic instruction. For details about the bits in this register and how they are affected by the different instructions, see the *Instruction Set Summary*.

Bit	7	6	5	4	3	2	1	0
	I	T	H	S	V	N	Z	C
Access	R/W	R/W	R/W	R/W	R/W	R/W	R/W	R/W
Reset	0	0	0	0	0	0	0	0

Bit 7 – I Global Interrupt Enable
Writing a '1' to this bit enable interrupts on the device.
Writing a '0' to this bit disables interrupts on the device, independent of the individual interrupt enable settings of the peripherals.
This bit is not cleared by hardware after an interrupt has occurred.
This bit can be set and cleared by software with the SEI and CLI instructions.
Changing the I flag through the I/O-register result in a one-cycle wait state on the access.

Bit 6 – T Bit Copy Storage
The bit copy instructions bit load (`BLD`) and bit store (`BST`) use the T bit as source or destination for the operated bit. A bit from a register in the register file can be copied into this bit by the `BST` instruction, and this bit can be copied into a bit in a register in the register file by the `BLD` instruction.

Bit 5 – H Half Carry Flag
This bit indicates a half carry in some arithmetic operations. Half carry is useful in BCD arithmetic.

Bit 4 – S Sign Bit, S = N ⊕ V
The sign bit (S) is always an exclusive or (*xor*) between the negative flag (N) and the two's complement overflow flag (V).

Bit 3 – V Two's Complement Overflow Flag
The two's complement overflow flag (V) supports two's complement arithmetic.

Bit 2 – N Negative Flag
The negative flag (N) indicates a negative result in an arithmetic or logic operation.

Bit 1 – Z Zero Flag
The zero flag (Z) indicates a zero result in an arithmetic or logic operation.

Bit 0 – C Carry Flag
The carry flag (C) indicates a carry in an arithmetic or logic operation.

9. NVMCTRL - Non Volatile Memory Controller

9.1 Features

- Unified memory
- In-system programmable
- Self-programming and boot loader support
- Configurable sections for write protection:
  - Boot section for boot loader code or application code
  - Application code section for application code
  - Application data section for application code or data storage
- Signature Row for factory-programmed data:
  - ID for each device type
  - Serial number for each device
  - Calibration bytes for factory calibrated peripherals
- User Row for application data:
  - 32 bytes in size
  - Can be read and written from software
  - Can be written from UPDI on locked device
  - Content is kept after chip erase

9.2 Overview

The NVM Controller (NVMCTRL) is the interface between the device, the Flash, and the EEPROM. The Flash and EEPROM are reprogrammable memory blocks that retain their values even when not powered. The Flash is mainly used for program storage, but can also be used for data storage. The EEPROM is used for data storage and can be programmed while the CPU is running the program from the Flash.

9.2.1 Block Diagram

Figure 9-1. NVMCTRL Block Diagram

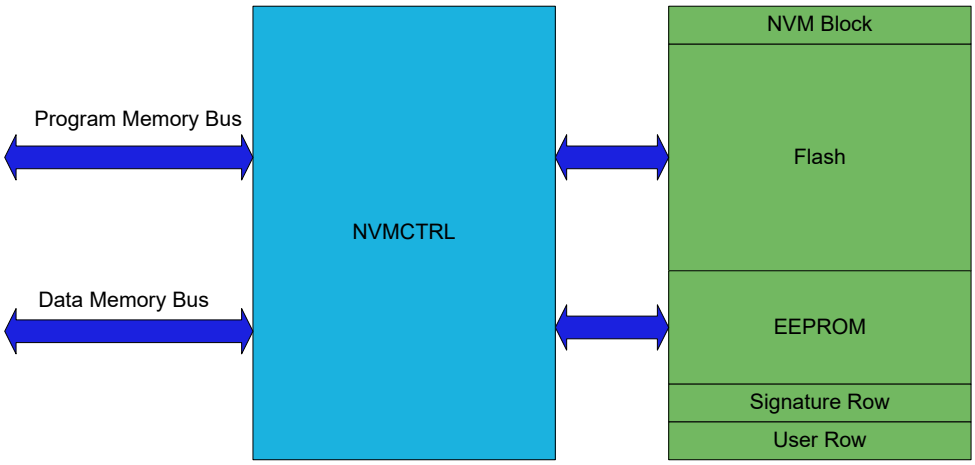

9.2.2 System Dependencies

In order to use this peripheral, other parts of the system must be configured correctly, as described below.

Table 9-1. NVMCTRL System Dependencies

Dependency	Applicable	Peripheral
Clocks	Yes	CLKCTRL
I/O Lines and Connections	No	-
Interrupts	Yes	CPUINT
Events	No	-
Debug	Yes	UPDI

Related Links

9.2.2.1 Clocks
9.2.2.5 Debug Operation
9.2.2.3 Interrupts

9.2.2.1 Clocks

This peripheral always runs on the CPU clock (CLK_CPU). It will request this clock also in sleep modes if a write/erase is ongoing.

Related Links

10. CLKCTRL - Clock Controller

9.2.2.2 I/O Lines and Connections

Not applicable.

9.2.2.3 Interrupts

Using the interrupts of this peripheral requires the Interrupt Controller to be configured first.

9.2.2.4 Events

Not applicable.

9.2.2.5 Debug Operation

When run-time debugging, this peripheral will continue normal operation. Halting the CPU in debugging mode will halt normal operation of the peripheral.

If the peripheral is configured to require periodical service by the CPU through interrupts or similar, improper operation or data loss may result during halted debugging.

Related Links

33. UPDI - Unified Program and Debug Interface

9.3 Functional Description

9.3.1 Memory Organization

9.3.1.1 Flash

The Flash is divided into a set of pages. A page is the basic unit addressed when programming the Flash. It is only possible to write or erase a whole page at a time. One page consists of several words.

The Flash can be divided into three sections in blocks of 256 bytes for different security. The three different sections are BOOT, application code (APPCODE) and application data (APPDATA).

Figure 9-2. Flash Sections

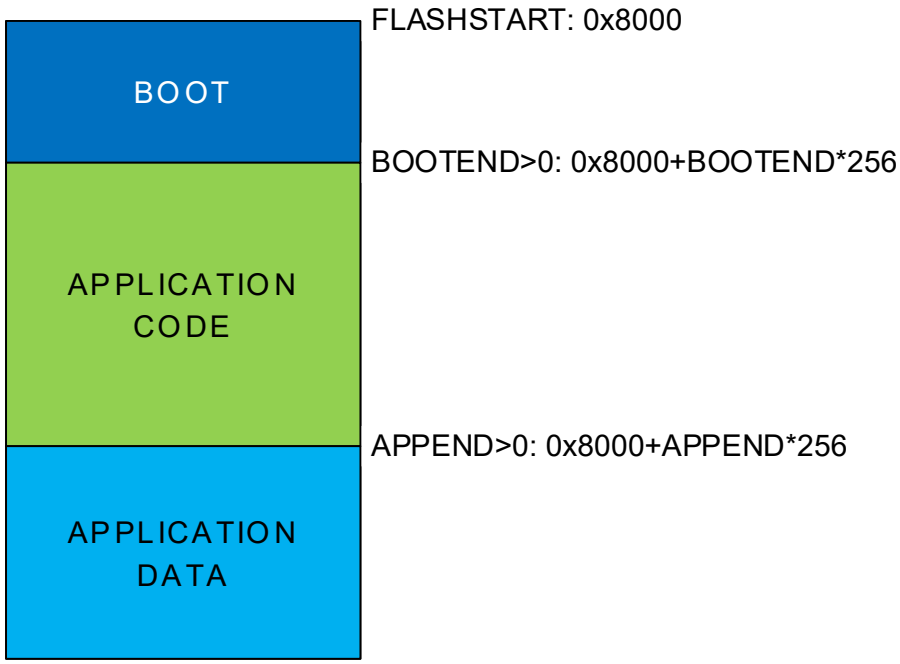

Section Sizes

The sizes of these sections are set by the Boot Section End fuse (FUSE.BOOTEND) and Application Code Section End fuse (FUSE.APPEND).

The fuses select the section sizes in blocks of 256 bytes. As shown in Figure 9-2, the BOOT section stretches from the start of the Flash until BOOTEND. The APPCODE section runs from BOOTEND until APPEND. The remaining area is the APPDATA section. If APPEND is written to 0, the APPCODE section runs from BOOTEND to the end of Flash (removing the APPDATA section). If BOOTEND and APPEND are written to 0, the entire Flash is regarded as BOOT section. APPEND should either be set to 0 or a value greater or equal than BOOTEND.

Table 9-2. Setting up Flash sections

BOOTEND	APPEND	BOOT section	APPCODE section	APPDATA section
0	0	0 to FLASHEND	-	-
> 0	0	0 to 256*BOOTEND	256*BOOTEND to FLASHEND	-
> 0	== BOOTEND	0 to 256*BOOTEND	-	256*BOOTEND to FLASHEND
> 0	> BOOTEND	0 to 256*BOOTEND	256*BOOTEND to 256*APPEND	256*APPEND to FLASHEND

Note:

- Also see 6.9.4.8 BOOTEND and 6.9.4.7 APPEND descriptions.
- Interrupt vectors are by default located after the BOOT section. This can be changed in the interrupt controller. Refer to 13.3.2.2 Interrupt Vector Locations

If FUSE.BOOTEND is written to 0x04 and FUSE.APPEND is written to 0x08, the first 4*256 bytes will be BOOT, the next 4*256 bytes will be APPCODE, and the remaining Flash will be APPDATA.

Inter-Section Write Protection
Between the three Flash sections, a directional write protection is implemented:

- Code in the BOOT section can write to APPCODE and APPDATA.
- Code in APPCODE can write to APPDATA
- Code in APPDATA cannot write to Flash or EEPROM.

Boot Section Lock and Application Code Section Write Protection
The two lock bits (APCWP and BOOTLOCK in NVMCTRL.CTRLB) can be set to lock further updates of the respective APPCODE or BOOT section until the next Reset.

The CPU can never write to the BOOT section. NVMCTRL_CTRLB.BOOTLOCK prevents reads and execution of code from the BOOT section.

9.3.1.2 EEPROM

The EEPROM is divided into a set of pages where one page consists of multiple bytes. The EEPROM has byte granularity on erase write. Within one page, only the bytes marked to be updated will be erased/written. The byte is marked by writing a new value to the page buffer for that address location.

9.3.1.3 User Row

The User Row is one extra page of EEPROM. This page can be used to store various data, such as calibration/ configuration data and serial numbers. This page is not erased by a chip erase. The User Row is written as normal EEPROM, but in addition it can be written through UPDI on a locked device.

9.3.2 Memory Access

9.3.2.1 Read

Reading of the Flash and EEPROM is done by using a load instructions with address according to the memory map. Reading any of the arrays while a write or erase is in progress will result in a bus wait, and the instruction will be suspended until the ongoing operation is complete.

9.3.2.2 Page Buffer Load

The page buffer is loaded by writing directly to the memories as defined in the memory map. Flash, EEPROM and User Row share the same page buffer so only one section can be programmed at one time. The least significant bits of the address are used to select where in the page buffer the data is written. The resulting data will be a binary AND operation between the new and the previous content of the page buffer. The page buffer will automatically be erased (all bits set) after:

- a device reset
- any page write or erase operation
- a clear page buffer command
- the device wakes up from any sleep mode

9.3.2.3 Programming

For page programming, filling the page buffer and writing the page buffer into Flash, User Row and EEPROM are two separate operations.

Before programming a flash page with the data in the page buffer, the flash page must be erased. The page buffer is also erased when the device enter sleep mode. Programming an un-erased flash page will corrupt its content.

The flash can either be written with the erase and write separately or one command handling both:

Alternative 1:

- Fill the page buffer
- Write the page buffer to flash with the `erase-write` page command

Alternative 2:

- Write to a location in the page to set up the address
- Perform a `erase` page command
- Fill the page buffer
- Perform a `write` page command

The NVM command set supports both a single erase and write operation, and split page erase and page write commands. This split commands enable shorter programming time for each command, and the erase operations can be done during non-time-critical programming execution.

The EEPROM programming is similar, but only the bytes updated in the page buffer will be written or erased in the EEPROM.

9.3.2.4 Commands

Reading of the Flash/EEPROM and writing of the page buffer is handled with normal load/store instructions. Other operations, such as writing and erasing the memory arrays, are handled by commands in the NVM.

To execute a command in the NVM:

1. Write the NVM command unlock to the Configuration Change Protection register in the CPU (CPU.CCP).
2. Write the desired command value to the CMD bits in the Control A register (NVMCTRL.CTRLA) within the next 4 instructions.

9.3.2.4.1 Write Command

The `write` command of the Flash controller writes the content of the page buffer to the Flash or EEPROM.

If the write is to the Flash, the CPU will stop executing code as long as the Flash is busy with the write operation. If the write is to the EEPROM, the CPU can continue executing code while the operation is ongoing.

The page buffer will be automatically cleared after the operation is finished.

9.3.2.4.2 Erase Command

The `erase` command erases the current page. There must be one byte written in the page buffer for the `erase` command to take effect.

For erasing the Flash, first write to one address in the desired page, then execute the command. The whole page in the Flash will then be erased. The CPU will be halted while the erase is ongoing.

For the EEPROM, only the bytes written in the page buffer will be erased when the command is executed. To erase a specific byte, write to its corresponding address before executing the command. To erase a whole page all the bytes in the page buffer has to be updated before executing the command. The CPU can continue running code while the operation is ongoing.

The page buffer will be automatically cleared after the operation is finished.

9.3.2.4.3 Erase-Write Operation

The `erase-write` command is a combination of the `erase` and `write` command, but without clearing the page buffer after the erase command: The `erase-write` operation first erases the selected page, then it writes the content of the page buffer to the same page.

When executed on the Flash, the CPU will be halted when the operations are ongoing. When executed on EEPROM, the CPU can continue executing code.

The page buffer will be automatically cleared after the operation is finished.

9.3.2.4.4 Page Buffer Clear Command

The `page buffer clear` command clears the page buffer. The contents of the page buffer will be all-ones after the operation. The CPU will be halted when the operation executes (7 CPU cycles).

9.3.2.4.5 Chip Erase Command

The `chip erase` command erases the Flash and the EEPROM. The EEPROM is unaltered if the EEPROM Save During Chip Erase (EESAVE) fuse in FUSE.SYSCFG0 is set. The memory will be all-ones after the operation.

9.3.2.4.6 EEPROM Erase Command

The `EEPROM erase` command erases the EEPROM. The EEPROM will be all-ones after the operation. The CPU will be halted while the EEPROM is being erased.

9.3.2.4.7 Fuse Write Command

The `fuse write` command writes the fuses. It can only be used by the UPDI, the CPU cannot start this command.

Follow this procedure to use this command:

- Write the address of the fuse to the Address register (NVMCTRL.ADDR)

- Write the data to be written to the fuse to the Data register (NVMCTRL.DATA)
- Execute the `fuse write` command.
- After the fuse is written, a Reset is required for the updated value to take effect.

For reading fuses, use a regular read on the memory location.

9.3.3 Preventing Flash/EEPROM Corruption

During periods of low V_{DD}, the Flash program or EEPROM data can be corrupted if the supply voltage is too low for the CPU and the Flash/EEPROM to operate properly. These issues are the same as for board level systems using Flash/EEPROM, and the same design solutions should be applied.

A Flash/EEPROM corruption can be caused by two situations when the voltage is too low: First, a regular write sequence to the Flash requires a minimum voltage to operate correctly. Also, the CPU itself can execute instructions incorrectly when the supply voltage is too low. See the Electrical Characteristics chapter for Maximum Frequency vs. VDD.

Flash/EEPROM corruption can be avoided by these measures:

Keep the device in reset during periods of insufficient power supply voltage. This can be done by enabling the internal Brown-Out Detector (BOD).

The voltage level monitor in the BOD can be used to prevent starting a write to the EEPROM close to the BOD level.

If the detection levels of the internal BOD does not match the required detection level, an external low- VDD-reset protection circuit can be used. If a Reset occurs while a write operation is ongoing, the write operation will be aborted.

Related Links

34.3 General Operating Ratings

17. BOD - Brownout Detector

9.3.4 Interrupts

Table 9-3. Available Interrupt Vectors and Sources

Offset	Name	Vector Description	Conditions
0x00	EEREADY	NVM	The EEPROM is ready for new write/erase operations.

When an interrupt condition occurs, the corresponding Interrupt Flag is set in the Interrupt Flags register of the peripheral (*NVMCTRL*.INTFLAGS).

An interrupt source is enabled or disabled by writing to the corresponding bit in the peripheral's Interrupt Enable register (*NVMCTRL*.INTEN).

An interrupt request is generated when the corresponding interrupt source is enabled and the Interrupt Flag is set. The interrupt request remains active until the Interrupt Flag is cleared. See the peripheral's INTFLAGS register for details on how to clear Interrupt Flags.

9.3.5 Sleep Mode Operation

If there is no ongoing write operation, the NVMCTRL will enter sleep mode when the system enters sleep mode.

If a write operation is ongoing when the system enters a sleep mode, the NVM block, the NVM Controller and the system clock will remain on until the write is finished. This is valid for all sleep modes, including Power Down sleep mode.

The EEPROM Ready interrupt will wake up the device only from Idle sleep mode.

The page buffer is cleared when waking up from sleep.

9.3.6 Configuration Change Protection

This peripheral has registers that are under Configuration Change Protection (CCP). In order to write to these, a certain key must be written to the CPU.CCP register first, followed by a write access to the protected bits within four CPU instructions.

It is possible to try writing to these registers any time, but the values are not altered.

The following registers are under CCP:

Table 9-4. NVMCTRL - Registers under Configuration Change Protection

Register	Key
NVMCTRL.CTRLA	SPM

Related Links

8.5.7.2 Sequence for Execution of Self-Programming

9.4 Register Summary - NVMCTRL

Offset	Name	Bit Pos.								
0x00	CTRLA	7:0						CMD[2:0]		
0x01	CTRLB	7:0							BOOTLOCK	APCWP
0x02	STATUS	7:0						WRERROR	EEBUSY	FBUSY
0x03	INTCTRL	7:0								EEREADY
0x04	INTFLAGS	7:0								EEREADY
0x05	Reserved									
0x06	DATA	7:0	DATA[7:0]							
		15:8	DATA[15:8]							
0x08	ADDR	7:0	ADDR[7:0]							
		15:8	ADDR[15:8]							

9.5 Register Description

9.5.1 Control A

Name: CTRLA
Offset: 0x00
Reset: 0x00
Property: Configuration Change Protection

Bit	7	6	5	4	3	2	1	0
						CMD[2:0]		
Access						R/W	R/W	R/W
Reset						0	0	0

Bits 2:0 – CMD[2:0] Command
Write this bit field to issue a command. The Configuration Change Protection key for self-programming (SPM) has to be written within four instructions before this write.

Value	Name	Description
0x0	-	No command
0x1	WP	Write page buffer to memory (NVMCTRL.ADDR selects which memory)
0x2	ER	Erase page (NVMCTRL.ADDR selects which memory)
0x3	ERWP	Erase and write page (NVMCTRL.ADDR selects which memory)
0x4	PBC	Page buffer clear
0x5	CHER	Chip erase: erase Flash and EEPROM (unless EESAVE in FUSE.SYSCFG is '1')
0x6	EEER	EEPROM Erase
0x7	WFU	Write fuse (only accessible through UPDI)

9.5.2 Control B

Name: CTRLB
Offset: 0x01
Reset: 0x00
Property: -

Bit	7	6	5	4	3	2	1	0
							BOOTLOCK	APCWP
Access							R/W	R/W
Reset							0	0

Bit 1 – BOOTLOCK Boot Section Lock
Writing a '1' to this bit locks the boot section from read and instruction fetch.
If this bit is '1', a read from the boot section will return '0'. A fetch from the boot section will also return 0 as instruction.
This bit can only be written from the boot section. It can only be cleared to '0' by a Reset.
This bit will only take effect when the boot section is left the first time after the bit is written.

Bit 0 – APCWP Application Code Section Write Protection
Writing a '1' to this bit protects the application code section from further writes.
This bit can only be written to '1', it is cleared to '0' only by Reset.

9.5.3 Status

Name: STATUS
Offset: 0x02
Reset: 0x00
Property: -

Bit	7	6	5	4	3	2	1	0
						WRERROR	EEBUSY	FBUSY
Access						R	R	R
Reset						0	0	0

Bit 2 – WRERROR Write Error
This bit will read '1' when a write error has happened. A write error could be writing to different sections before doing a page write or writing to a protected area. This bit is valid for the last operation.

Bit 1 – EEBUSY EEPROM Busy
This bit will read '1' when the EEPROM is busy with a command.

Bit 0 – FBUSY Flash Busy
This bit will read '1' when the Flash is busy with a command.

9.5.4 Interrupt Control

Name: INTCTRL
Offset: 0x03
Reset: 0x00
Property: -

Bit	7	6	5	4	3	2	1	0
								EEREADY
Access								R/W
Reset								0

Bit 0 – EEREADY EEPROM Ready Interrupt
Writing a '1' to this bit enables the interrupt which indicates that the EEPROM is ready for new write/erase operations. This is a level interrupt that will be triggered only when the EEREADY flag in the INTFLAGS register is set to zero. Thus, the interrupt should not be enabled before triggering an NVM command, as the EEREADY flag will not be set before the NVM command issued. The interrupt should be disabled in the interrupt handler.

9.5.5 Interrupt Flags

Name: INTFLAGS
Offset: 0x04
Reset: 0x00
Property: -

Bit	7	6	5	4	3	2	1	0
								EEREADY
Access								R/W
Reset								0

Bit 0 – EEREADY EEREADY Interrupt Flag
Interrupt flag for the EEPROM interrupt. This bit is cleared by writing a '1' to it. When this interrupt is enabled, it will immediately request an interrupt, and it will continue to request interrupts continuously - even if no EEPROM writes are initiated.

9.5.6 Data

Name: DATA
Offset: 0x06
Reset: 0x00
Property: -

The NVMCTRL.DATAL and NVMCTRL.DATAH register pair represents the 16-bit value, NVMCTRL.DATA. The low byte [7:0] (suffix L) is accessible at the original offset. The high byte [15:8] (suffix H) can be accessed at offset + 0x01. For more details on reading and writing 16-bit registers, refer to 8.5.6 Accessing 16-bit Registers.

Bit	15	14	13	12	11	10	9	8
	DATA[15:8]							
Access	R/W	R/W	R/W	R/W	R/W	R/W	R/W	R/W
Reset	0	0	0	0	0	0	0	0

Bit	7	6	5	4	3	2	1	0
	DATA[7:0]							
Access	R/W	R/W	R/W	R/W	R/W	R/W	R/W	R/W
Reset	0	0	0	0	0	0	0	0

Bits 15:0 – DATA[15:0] Data Register
This register is used by the UPDI for fuse write operations.

9.5.7 Address

Name: ADDR
Offset: 0x08
Reset: 0x00
Property: -

The NVMCTRL.ADDRL and NVMCTRL.ADDRH register pair represents the 16-bit value, NVMCTRL.ADDR. The low byte [7:0] (suffix L) is accessible at the original offset. The high byte [15:8] (suffix H) can be accessed at offset + 0x01. For more details on reading and writing 16-bit registers, refer to 8.5.6 Accessing 16-bit Registers.

Bit	15	14	13	12	11	10	9	8
	ADDR[15:8]							
Access	R/W	R/W	R/W	R/W	R/W	R/W	R/W	R/W
Reset	0	0	0	0	0	0	0	0

Bit	7	6	5	4	3	2	1	0
	ADDR[7:0]							
Access	R/W	R/W	R/W	R/W	R/W	R/W	R/W	R/W
Reset	0	0	0	0	0	0	0	0

Bits 15:0 – ADDR[15:0] Address
The Address register contains the address to the last memory location that has been updated.

10. CLKCTRL - Clock Controller

10.1 Features

- All clocks and clock sources are automatically enabled when requested by peripherals
- Internal oscillators:
  - 16/20MHz oscillator (OSC20M)
  - 32KHz Ultra Low Power oscillator (OSCULP32K)
- External clock options:
  - 32.768kHz crystal oscillator (XOSC32K)
  - External clock
- Main clock features:
  - Safe run-time switching
  - Prescaler with 1x to 64x division in 12 different settings

10.2 Overview

The Clock Controller peripheral (CLKCTRL) controls, distributes, and prescales the clock signals from the available oscillators. The CLKCTRL supports internal and external clock sources.

The CLKCTRL is based on an automatic clock request system, implemented in all peripherals on the device. The peripherals will automatically request the clocks needed. If multiple clock sources are available, the request is routed to the correct clock source.

The Main Clock (CLK_MAIN) is used by the CPU, RAM, and the IO bus. The Main Clock source can be selected and prescaled. Some peripherals can share the same clock source as the Main Clock, or run asynchronously to the Main Clock domain.

10.2.1 Block Diagram - CLKCTRL

Figure 10-1. CLKCTRL Block Diagram

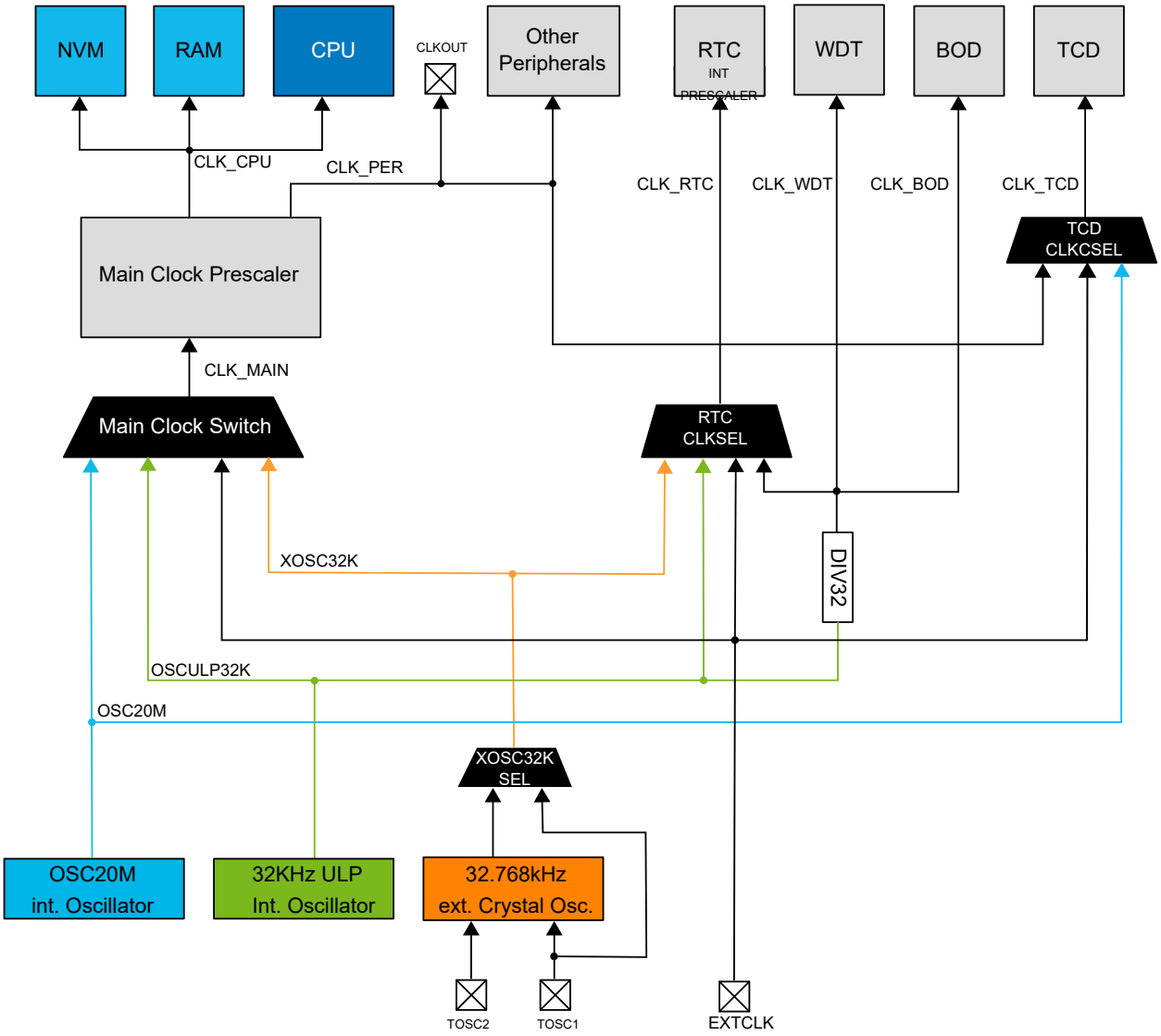

The clock system consists of the Main Clock and other asynchronous clocks:

- Main Clock
  This clock is used by the CPU, RAM, Flash, the IO bus and all peripherals connected to the IO bus. It is always running in Active and Idle sleep mode, and can be running in Standby sleep mode if requested.

  The main clock CLK_MAIN is prescaled and distributed by the Clock Controller:
  - CLK_CPU is used by the CPU, SRAM and the NVMCTRL peripheral to access the non-volatile memory
  - CLK_PER is used by all peripherals that are not listed under asynchronous clocks.
- Clocks running asynchronously to the Main Clock domain:
  - CLK_RTC is used by the RTC/PIT. It will be requested when the RTC/PIT is enabled. The clock source for CLK_RTC should only be changed if the peripheral is disabled.
  - CLK_WDT is used by the WDT. It will be requested when the WDT is enabled.
  - CLK_BOD is used by the BOD. It will be requested when the BOD is enabled in Sampled Mode.
  - CLK_TCD is used by the TCD. It will be requested when the TCD is enabled. The clock source can only be changed if the peripheral is disabled.

The clock source for the for the Main Clock domain is configured by writing to the Clock Select bits (CLKSEL) in the Main Clock Control A register (CLKCTRL.MCLKCTRLA). The asynchronous clock sources are configured by registers in the respective peripheral.

10.2.2 Signal Description

Signal	Type	Description
CLKOUT	Digital output	CLK_PER output

Related Links

5. I/O Multiplexing and Considerations

10.3 Functional Description

10.3.1 Sleep Mode Operation

When a clock source is not used/requested it will turn off. It is possible to request an clock source directly by writing a '1' to the Run Standby bit (RUNSTDBY) in the respective oscillator's Control A register (CLKCTRL.[osc]CTRLA). This will cause the oscillator to run constantly, except for Power Down sleep mode. Additionally, when this bit is written to '1' the oscillator start-up time is eliminated when the clock source is requested by a peripheral.

The Main Clock will always run in Active and Idle sleep mode. In Standby sleep mode, the Main Clock will only run if any peripheral is requesting it, or the Run in Standby bit (RUNSTDBY) in the respective oscillator's Control A register (CLKCTRL.[osc]CTRLA) is written to '1'.

In Power Down sleep mode, the Main Clock will stop after all NVM operations are completed.

10.3.2 Main Clock Selection and Prescaler

All internal oscillators can be used as the Main Clock source for CLK_MAIN. The Main Clock source is selectable from software, and can be safely changed during normal operation.

Built-in hardware protection prevents unsafe clock switching:

Upon selection of an external clock source, a switch to the chosen clock source will only occur if edges are detected, indicating it is stable. Until a sufficient number of clock edges are detected, the switch will not occur and it will not be possible to change to another clock source again without executing a Reset.

An ongoing clock source switch is indicated by the System Oscillator Changing flag (SOSC) in the Main Clock Status register (CLKCTRL.MCLKSTATUS). The stability of the external clock sources is indicated by the respective status flags (EXTS and XOSC32KS in CLKCTRL.MCLKSTATUS).

⚠ CAUTION If an external clock source fails while used as CLK_MAIN source, only the WDT can provide a mechanism to switch back via System Reset.

CLK_MAIN is fed into a prescaler before it is used by the peripherals (CLK_PER) in the device. The prescaler divide CLK_MAIN by a factor from 1 to 64.

Figure 10-2. Main Clock and Prescaler

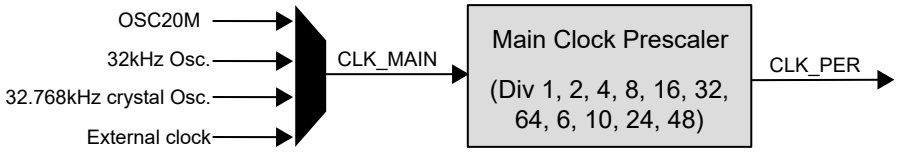

The Main Clock and Prescaler configuration registers (CLKCTRL.MCLKCTRLA, CLKCTRL.MCLKCTRLB) are protected by the Configuration Change Protection Mechanism, employing a timed write procedure for changing these registers.

Related Links

8.5.7 CCP - Configuration Change Protection

10.3.3 Main Clock after Reset

After any Reset, CLK_MAIN is provided by the 16/20MHz oscillator (OSC20M) and with a Prescaler division factor of 6. Since the actual frequency of the OSC20M is determined by the Frequency Select bits (FREQSEL) of the Oscillator Configuration fuse (FUSE.OSCCFG), these frequencies are possible after Reset:

Table 10-1. Peripheral Clock Frequencies after Reset

CLK_MAIN as per FREQSEL in FUSE.OSCCFG	Resulting CLK_PER
16MHz	2.66MHz
20MHz	3.33MHz

See the OSC20M description for further details.

Related Links

10.3.4.1.1 16/20MHz Oscillator (OSC20M)

10.3.4 Clock Sources

All internal clock sources are enabled automatically when they are requested by a peripheral. The crystal oscillator, based on an external crystal, must be enabled by writing a '1' to the ENABLE bit in the 32KHz Crystal Oscillator Control A register (CLKCTRL.XOSC32KCTRLA) before it can serve as clock source.

The respective Oscillator Status bits in the Main Clock Status register (CLKCTRL.MCLKSTATUS) indicate whether the clock source is running and stable.

Related Links

6.9 FUSES - Configuration and User Fuses
8.5.7 CCP - Configuration Change Protection

10.3.4.1 Internal Oscillators

The internal oscillators do not require any external components to run. See the related links for accuracy and electrical characteristics.

Related Links

34. Electrical Characteristics

10.3.4.1.1 16/20MHz Oscillator (OSC20M)

This oscillator can operate at multiple frequencies, selected by the value of the Frequency Select bits (FREQSEL) in the Oscillator Configuration fuse (FUSE.OSCCFG). The center frequencies are:

- 16MHz
- 20MHz

After a System Reset, FUSE.OSCCFG determines the initial frequency of CLK_MAIN.

During Reset the calibration values for the OSC20M are loaded from fuses . There are two different calibration bit fields. The Calibration bit field (CAL20M) in the Calibration A register (CLKCTRL.OSC20MCALIBA) enables calibration around the current center frequency. The Oscillator Temperature Coefficient Calibration bit field (TEMPCAL20M) in the Calibration B register (CLKCTRL.OSC20MCALIBB) enables adjustment of the slope of the temperature drift compensation.

For applications requiring more fine-tuned frequency setting than the oscillator calibration provides, factory stored frequency error after calibrations are available.

The oscillator calibration can be locked by the Oscillator Lock (OSCLOCK) fuse (FUSE.OSCCFG). When this fuse is '1', it is not possible to change the calibration. The calibration is also locked if this oscillator is used as Main Clock source and the Lock Enable bit (LOCKEN) in the Control B register (CLKCTRL.OSC20MCALIBB) is '1'.

The calibration bits are also protected by the Configuration Change Protection Mechanism, requiring a timed write procedure for changing the Main Clock and Prescaler settings.

The start-up time of this oscillator is analog start-up time plus 4 oscillator cycles. Refer to Electrical Characteristics chapter for the start-up time.

When changing oscillator calibration value, the frequency may overshoot. If the oscillator is used as the main clock (CLK_MAIN) it is recommended to change the main clock prescaler so that the main clock frequency does not exceed ¼ of the maximum operation main clock frequency as described in the General Operating Ratings. The system clock prescaler can be changed back after the oscillator calibration value has been updated.

Related Links

34. Electrical Characteristics
6.9 FUSES - Configuration and User Fuses
10.3.5 Configuration Change Protection
34.3 General Operating Ratings
10.3.3 Main Clock after Reset
10.3.3 Main Clock after Reset
34.10 Oscillators and Clocks

OSC20M Stored Frequency Error Compensation

This oscillator can operate at multiple frequencies, selected by the value of the Frequency Select bits (FREQSEL) in the Oscillator Configuration fuse (FUSE.OSCCFG) at Reset. As previously mentioned appropriate calibration values are loaded to adjust to center frequency (OSC20M), and temperature drift compensation (TEMPCAL20M), meeting the specifications defined in the Internal Oscillator Characteristics. For applications requiring wider operating range, the relative factory stored frequency error after calibrations can be used. The 4 errors are measured at different setting and are available in Signature Row as signed byte values.

- SIGROW.OSC16ERR3V is the frequency error from 16MHz measured at 3V
- SIGROW.OSC16ERR5V is the frequency error from 16MHz measured at 5V
- SIGROW.OSC20ERR3V is the frequency error from 20MHz measured at 3V
- SIGROW.OSC20ERR5V is the frequency error from 20MHz measured at 5V

The Error is stored as a compressed ***Q1.10*** fixed point 8 bit value, in order not to lose resolution, where the MSB is the sign bit and the 7 LSBs the lower bits of the ***Q.10***.

$$\mathrm{BAUD}_{actual} = \left(\mathrm{BAUD}_{ideal} + \frac{\mathrm{BAUD}_{ideal} * SigRowError}{1024}\right)$$

The minimum legal BAUD register value is 0x40, the target BAUD register value should therefor not be lower than 0x4A to ensure that the compensated BAUD value stays within the legal range, even for parts with negative compensation values. The example code below, demonstrates how to apply this value for more accurate USART baud rate:

```
  #include <assert.h>
  /* Baud rate compensated with factory stored frequency error */
  /* Asynchronous communication without Auto-baud (Sync Field) */
  /* 16MHz Clock, 3V and 600 BAUD                              */

  int8_t  sigrow_val    = SIGROW.OSC16ERR3V;   // read signed error
  int32_t baud_reg_val  = 600;                 // ideal BAUD register value

  assert (baud >= 0x4A);                       // Verify legal min BAUD register value with
max neg comp
  baud_reg_val *= (1024 + sigrow_value);       // sum resolution + error
  baud_reg_val /=  1024;                       // divide by resolution
  USART0.BAUD = (int16_t) baud_reg_val;        // set adjusted baud rate
```

Related Links

34.10 Oscillators and Clocks

10.3.4.1.2 32KHz Oscillator (OSCULP32K)

The 32KHz oscillator is optimized for Ultra Low Power (ULP) operation. Power consumption is decreased at the cost of decreased accuracy compared to an external crystal oscillator.

This oscillator also provides the 1KHz signal for the Real Time Counter (RTC), the Watchdog Timer (WDT), and the Brownout Detector (BOD).

The start-up time of this oscillator is the oscillator start-up time plus 4 oscillator cycles. Refer to Electrical Characteristics chapter for the start-up time.

Related Links

34. Electrical Characteristics
17. BOD - Brownout Detector
19. WDT - Watchdog Timer
23. RTC - Real Time Counter

10.3.4.2 External Clock Sources

These external clock sources are available:

- External clock from pin. (EXTCLK).
- The TOSC1 and TOSC2 pins are dedicated to driving a 32.768kHz crystal oscillator (XOSC32K).
- Instead of a crystal oscillator, TOSC1 can be configured to accept an external clock source.

10.3.4.2.1 32.768kHz Crystal Oscillator (XOSC32K)

This oscillator supports two input options: Either a crystal is connected to the pins TOSC1 and TOSC2, or an external clock running at 32KHz is connected to TOSC1. The input option must be configured by writing the Source Select bit (SEL) in the XOSC32K Control A register (CLKCTRL.XOSC32KCTRLA).

The XOSC32K is enabled by writing a '1' to its ENABLE bit in CLKCTRL.XOSC32KCTRLA. When enabled, the configuration of the GPIO pins used by the XOSC32K is overridden as TOSC1, TOSC2 pins. The Enable bit needs to be set for the oscillator to start running when requested.

The start-up time of a given crystal oscillator can be accommodated by writing to the Crystal Start-up Time bits (CSUT) in CLKCTRL.XOSC32KCTRLA.

When XOSC32K is configured to use an external clock on TOSC1, the start-up time is fixed to 2 cycles.

10.3.4.2.2 External Clock (EXTCLK)

The External Clock is taken directly from the pin. This GPIO pin is automatically configured for EXTCLK if any peripheral is requesting this clock.

This clock source has a start-up time of 2 cycles when first requested.

10.3.5 Configuration Change Protection

This peripheral has registers that are under Configuration Change Protection (CCP). In order to write to these, a certain key must be written to the CPU.CCP register first, followed by a write access to the protected bits within four CPU instructions.

It is possible to try writing to these registers any time, but the values are not altered.

The following registers are under CCP:

Table 10-2. CLKCTRL - Registers under Configuration Change Protection

Register	Key
CLKCTRL.MCLKCTRLB	IOREG
CLKCTRL.MCLKLOCK	IOREG
CLKCTRL.XOSC32KCTRLA	IOREG
CLKCTRL.MCLKCTRLA	IOREG
CLKCTRL.OSC20MCTRLA	IOREG

.....continued	
Register	**Key**
CLKCTRL.OSC20MCALIBA	IOREG
CLKCTRL.OSC20MCALIBB	IOREG
CLKCTRL.OSC32KCTRLA	IOREG

Related Links

8.5.7.1 Sequence for Write Operation to Configuration Change Protected I/O Registers

10.4 Register Summary - CLKCTRL

Offset	Name	Bit Pos.								
0x00	MCLKCTRLA	7:0	CLKOUT						CLKSEL[1:0]	
0x01	MCLKCTRLB	7:0				PDIV[3:0]				PEN
0x02	MCLKLOCK	7:0								LOCKEN
0x03	MCLKSTATUS	7:0	EXTS	XOSC32KS	OSC32KS	OSC20MS				SOSC
0x04 ... 0x0F	Reserved									
0x10	OSC20MCTRLA	7:0							RUNSTDBY	
0x11	OSC20MCALIBA	7:0			CAL20M[5:0]					
0x12	OSC20MCALIBB	7:0	LOCK				TEMPCAL20M[3:0]			
0x13 ... 0x17	Reserved									
0x18	OSC32KCTRLA	7:0							RUNSTDBY	
0x19 ... 0x1B	Reserved									
0x1C	XOSC32KCTRLA	7:0			CSUT[1:0]			SEL	RUNSTDBY	ENABLE

10.5 Register Description

10.5.1 Main Clock Control A

Name: MCLKCTRLA
Offset: 0x00
Reset: 0x00
Property: Configuration Change Protection

Bit	7	6	5	4	3	2	1	0
	CLKOUT						CLKSEL[1:0]	
Access	R/W	R	R	R	R	R	R/W	R/W
Reset	0	0	0	0	0	0	0	0

Bit 7 – CLKOUT System Clock Out
When this bit is written to '1', the system clock is output to CLKOUT pin.
When the device is in a sleep mode, there is no clock output unless a peripheral is using the system clock.

Bits 1:0 – CLKSEL[1:0] Clock Select
This bit field selects the source for the Main Clock (CLK_MAIN).

Value	Name	Description
0x0	OSC20M	16/20MHz internal oscillator
0x1	OSCULP32K	32KHz internal Ultra Low Power oscillator
0x2	XOSC32K	32.768kHz external crystal oscillator
0x3	EXTCLK	External clock

10.5.2 Main Clock Control B

Name: MCLKCTRLB
Offset: 0x01
Reset: 0x11
Property: Configuration Change Protection

Bit	7	6	5	4	3	2	1	0
				PDIV[3:0]				PEN
Access	R	R	R	R/W	R/W	R/W	R/W	R/W
Reset	0	0	0	1	0	0	0	1

Bits 4:1 – PDIV[3:0] Prescaler Division
If the Prescaler Enable (PEN) bit is written to '1', these bits define the division ratio of the Main Clock prescaler. These bits can be written during run-time to vary the clock frequency of the system to suit the application requirements.
User software must ensure a correct configuration of input frequency (CLK_MAIN) and Prescaler settings, such that the resulting frequency of CLK_PER never exceeds the allowed maximum (see Electrical Characteristics).

Value	Description
Value	Division
0x0	2
0x1	4
0x2	8
0x3	16
0x4	32
0x5	64
0x8	6
0x9	10
0xA	12
0xB	24
0xC	48
other	Reserved

Bit 0 – PEN Prescaler Enable
This bit must be written '1' to enable the prescaler. When enabled, the division ratio is selected by the PDIV bit field. When this bit is written to '0', the Main Clock will pass through undivided (CLK_PER=CLK_MAIN), regardless of the value of PDIV.

10.5.3 Main Clock Lock

Name: MCLKLOCK
Offset: 0x02
Reset: 0x00
Property: Configuration Change Protection

Bit	7	6	5	4	3	2	1	0
								LOCKEN
Access	R	R	R	R	R	R	R	R/W
Reset	0	0	0	0	0	0	0	x

Bit 0 – LOCKEN Lock Enable
Writing this bit to '1' will lock the CLKCTRL.MCLKCTRLA and CLKCTRL.MCLKCTRLB registers, and, if applicable, the calibration settings for the current Main Clock source from further software updates. Once locked, the CLKCTRL.MCLKLOCK registers cannot be accessed until the next hardware Reset.
This provides protection for the CLKCTRL.MCLKCTRLA and CLKCTRL.MCLKCTRLB registers and calibration settings for the Main Clock source from unintentional modification by software.

Related Links
6.9 FUSES - Configuration and User Fuses

10.5.4 Main Clock Status

Name: MCLKSTATUS
Offset: 0x03
Reset: 0x00
Property: -

Bit	7	6	5	4	3	2	1	0
	EXTS	XOSC32KS	OSC32KS	OSC20MS				SOSC
Access	R	R	R	R	R	R	R	R
Reset	0	0	0	0	0	0	0	0

Bit 7 – EXTS External Clock Status

Value	Description
0	EXTCLK has not started
1	EXTCLK has started

Bit 6 – XOSC32KS XOSC32K Status
The status bit will only be available if the source is requested as the main clock or by another module. If the oscillators RUNSTDBY bit is set but the oscillator is unused/not requested this bit will be 0.

Value	Description
0	XOSC32K is not stable
1	XOSC32K is stable

Bit 5 – OSC32KS OSCULP32K Status
The status bit will only be available if the source is requested as the main clock or by another module. If the oscillators RUNSTDBY bit is set but the oscillator is unused/not requested this bit will be 0.

Value	Description
0	OSCULP32K is not stable
1	OSCULP32K is stable

Bit 4 – OSC20MS OSC20M Status
The status bit will only be available if the source is requested as the main clock or by another module. If the oscillators RUNSTDBY bit is set but the oscillator is unused/not requested this bit will be 0.

Value	Description
0	OSC20M is not stable
1	OSC20M is stable

Bit 0 – SOSC Main Clock Oscillator Changing

Value	Description
0	The clock source for CLK_MAIN is not undergoing a switch.
1	The clock source for CLK_MAIN is undergoing a switch, and will change as soon as the new source is stable.

10.5.5 16/20MHz Oscillator Control A

Name: OSC20MCTRLA
Offset: 0x10
Reset: 0x00
Property: Configuration Change Protection

Bit	7	6	5	4	3	2	1	0
							RUNSTDBY	
Access	R	R	R	R	R	R	R/W	R
Reset	0	0	0	0	0	0	0	0

Bit 1 – RUNSTDBY Run Standby
This bit force the oscillator on in all modes, even when unused by the system. In standby sleep mode this can be used to ensure immediate wake-up and not waiting for oscillator start-up time.
When not requested by peripherals, no oscillator output is provided.
It takes 4 oscillator cycles to open the clock gate after a request but the oscillator analog start-up time will be removed when this bit is set.

10.5.6 16/20MHz Oscillator Calibration A

Name: OSC20MCALIBA
Offset: 0x11
Reset: Based on FREQSEL in FUSE.OSCCFG
Property: Configuration Change Protection

Bit	7	6	5	4	3	2	1	0
			CAL20M[5:0]					
Access			R/W	R/W	R/W	R/W	R/W	R/W
Reset			x	x	x	x	x	x

Bits 5:0 – CAL20M[5:0] Calibration
These bits change the frequency around the current center frequency of the OSC20M for fine tuning.
At Reset factory calibrated values are loaded based on FREQSEL bits in FUSE.OSCCFG.

10.5.7 16/20MHz Oscillator Calibration B

Name: OSC20MCALIBB
Offset: 0x12
Reset: Based on FUSE.OSCCFG
Property: Configuration Change Protection

Bit	7	6	5	4	3	2	1	0
	LOCK				TEMPCAL20M[3:0]			
Access	R				R/W	R/W	R/W	R/W
Reset	x				x	x	x	x

Bit 7 – LOCK Oscillator Calibration Locked by Fuse
When this bit is set, the calibration settings in CLKCTRL.OSC20MCALIBA and CLKCTRL.OSC20MCALIBB cannot be changed.
The Reset value is loaded from the OSCLOCK bit in the Oscillator Configuration fuse (FUSE.OSCCFG).

Bits 3:0 – TEMPCAL20M[3:0] Oscillator Temperature Coefficient Calibration
These bits tune the slope of the temperature compensation.
At Reset factory calibrated values are loaded based on FREQSEL bits in FUSE.OSCCFG.

10.5.8 32KHz Oscillator Control A

Name: OSC32KCTRLA
Offset: 0x18
Reset: 0x00
Property: Configuration Change Protection

Bit	7	6	5	4	3	2	1	0
							RUNSTDBY	
Access	R	R	R	R	R	R	R/W	R
Reset	0	0	0	0	0	0	0	0

Bit 1 – RUNSTDBY Run Standby
This bit force the oscillator on in all modes, even when unused by the system. In standby sleep mode this can be used to ensure immediate wake-up and not waiting for oscillator start-up time.
When not requested by peripherals, no oscillator output is provided.
It takes 4 oscillator cycles to open the clock gate after a request but the oscillator analog start-up time will be removed when this bit is set.

10.5.9 32.768kHz Crystal Oscillator Control A

Name: XOSC32KCTRLA
Offset: 0x1C
Reset: 0x00
Property: Configuration Change Protection

The SEL and CSUT bits cannot be changed as long as the ENABLE bit is set or the XOSC32K Stable bit (XOSC32KS) in CLKCTRL.MCLKSTATUS is high.
To change settings in a safe way: write a '0' to the ENABLE bit and wait until XOSC32KS is '0' before re-enabling the XOSC32K with new settings.

Bit	7	6	5	4	3	2	1	0
			CSUT[1:0]			SEL	RUNSTDBY	ENABLE
Access	R	R	R/W	R/W	R	R/W	R/W	R/W
Reset	0	0	0	0	0	0	0	0

Bits 5:4 – CSUT[1:0] Crystal Start-Up Time
These bits select the start-up time for the XOSC32K. It is write protected when the oscillator is enabled (ENABLE=1). If SEL=1, the start-up time will not be applied.

Value	Name	Description
0x0	1K	1k cycles
0x1	16K	16k cycles
0x2	32K	32k cycles
0x3	64K	64k cycles

Bit 2 – SEL Source Select
This bit select the external source type. It is write protected when the oscillator is enabled (ENABLE=1).

Value	Description
0	External crystal
1	External clock on TOSC1 pin

Bit 1 – RUNSTDBY Run Standby
Writing this bit to '1' starts the crystal oscillator and forces the oscillator on in all modes, even when unused by the system if the ENABLE bit is set. In standby sleep mode this can be used to ensure immediate wake-up and not waiting for oscillator start-up time. When this bit is '0', the crystal oscillator is only running when requested and the ENABLE bit is set.
The output of XOSC32K is not sent to other peripherals unless it is requested by one or more peripherals.
When the RUNSTDBY bit is set there will only be a delay of two to three crystal oscillator cycles after a request until the oscillator output is received, if the initial crystal start-up time already has completed.
According to RUNSTBY bit, the oscillator will be turned on all the time if the device is in Active, Idle or Standby sleep mode, or only be enabled when requested.
This bit is I/O protected to prevent unintentional enabling of the oscillator.

Bit 0 – ENABLE Enable
When this bit is written to '1', the configuration of the respective input pins is overridden to TOSC1 and TOSC2. Also, the Source Select bit (SEL) and Crystal Start-Up Time (CSUT) become read-only.
This bit is I/O protected to prevent unintentional enabling of the oscillator.

11. SLPCTRL - Sleep Controller

11.1 Features

- Three sleep modes:
  - Idle
  - Standby
  - Power Down
- Configurable Standby sleep mode where peripherals can be configured as on or off.
- SleepWalking in Standby sleep mode, where the PTC can start running on an Event without waking up the device.

11.2 Overview

Sleep modes are used to shut down peripherals and clock domains in the device in order to save power. The Sleep Controller (SLPCTRL) controls and handles the transitions between active mode and sleep mode.

There are in total four modes available, one active mode in which software is executed, and three sleep modes. The available sleep modes are: Idle, Standby and Power Down.

When the device enters a sleep mode, program execution is stopped, and depending on the entered sleep mode, different peripherals and clock domains are turned off.

To enter a sleep mode, the SLPCTRL must be enabled and the desired sleep mode must be stated. The software decides when to enter that sleep mode by using a dedicated sleep instruction (`SLEEP`).

Interrupts are used to wake up the device from sleep. The available Interrupt wake-up sources depend on the configured sleep mode. When an interrupt occurs, the device will wake up and execute the interrupt service routine before continuing normal program execution from the first instruction after the sleep instruction. Any Reset will also take the device out of a sleep mode.

11.2.1 Block Diagram

Figure 11-1. Sleep Controller in System

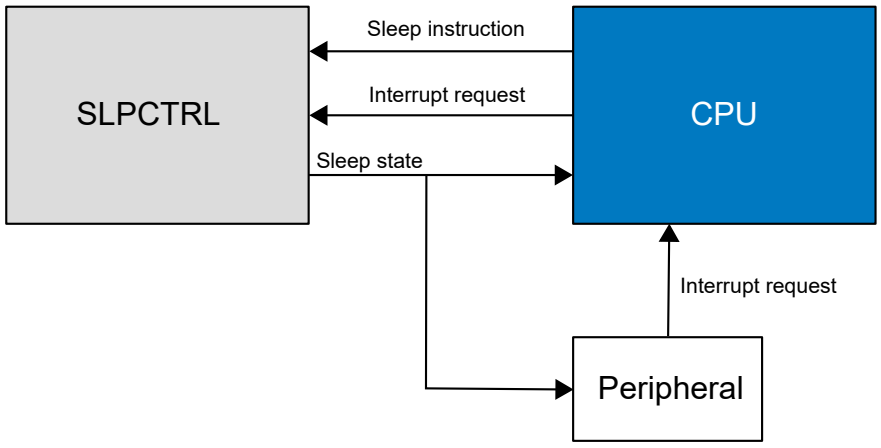

11.2.2 System Dependencies

In order to use this peripheral, other parts of the system must be configured correctly, as described below.

Table 11-1. SLPCTRL System Dependencies

Dependency	Applicable	Peripheral
Clocks	Yes	CLKCTRL
I/O Lines and Connections	No	-
Interrupts	no	-
Events	No	-
Debug	Yes	UPDI

11.2.2.1 Clocks

This peripheral depends on the peripheral clock.

Related Links

10. CLKCTRL - Clock Controller

11.2.2.2 I/O Lines and Connections

Not applicable.

11.2.2.3 Interrupts

Not applicable.

11.2.2.4 Events

Not applicable.

11.2.2.5 Debug Operation

When run-time debugging, this peripheral will continue normal operation. The SLPCTRL is only affected by a break in debug operation: If the SLPCTRL is in a sleep mode when a break occurs, the device will wake up and the SLPCTRL will go to active mode, even if there are no pending interrupt requests.

If the peripheral is configured to require periodical service by the CPU through interrupts or similar, improper operation or data loss may result during halted debugging.

11.3 Functional Description

11.3.1 Initialization

To put the device into a sleep mode, follow these steps:

- Configure and enable the interrupts that should wake up the device from sleep. Also enable global interrupts.

  WARNING If there are no interrupts enabled when going to sleep, the device cannot wake up again. Only a reset will allow the device to continue operation.

- Select the sleep mode to be entered and enable the Sleep Controller by writing to the Sleep Mode bits (SMODE) and the Enable bit (SEN) in the Control A register (SLPCTRL.CTRLA). A SLEEP instruction must be run to make the device actually go to sleep.

11.3.2 Operation

11.3.2.1 Sleep Modes

In addition to Active mode, there are three different sleep modes, with decreasing power consumption and functionality.

Idle The CPU stops executing code, no peripherals are disabled.
All interrupt sources can wake up the device.

Standby	The user can configure peripherals to be enabled or not, using the respective RUNSTBY bit. This means that the power consumption is highly dependent on what functionality is enabled, and thus may vary between the Idle and Power Down levels. SleepWalking is available for the ADC module. The wake-up sources are Pin interrupts, TWI address match, UART Start-of-Frame interrupt (if USART is enabled to run in Standby), ADC window interrupt (if PTC enabled to run in Standby), RTC interrupt (if RTC enabled to run in Standby), and TCB interrupt.
Power Down	Only the WDT and the PIT (component of the RTC) are active. The only wake-up sources are the pin change interrupt and TWI address match.

Table 11-2. Sleep Mode Activity Overview

Group	Peripheral		Active in Sleep Mode		
		Clock	Idle	Standby	Power Down
Active Clock Domain	CPU	CLK_CPU			
	Peripherals	CLK_PER	X		
	RTC	CLK_RTC	X	X*	
	ADC/PTC	CLK_PER	X	X*	
	PIT (RTC)	CLK_RTC	X	X	X
	WDT	CLK_WDT	X	X	X
	Oscillators	Main Clock Source	X	X*	
		RTC Clock Source	X	X*	
WDT Oscillator		X	X	X	
Wake-Up Sources	INTn and pin change		X	X	X
	TWI address match		X	X	X
	Periodic Interrupt Timer		X	X	X
	UART start of frame		X	X*	
	ADC/PTC window		X	X*	
	RTC interrupt		X	X*	
	All other interrupts		X		

Note:

- X means active. X* indicates that the RUNSTBY bit of the corresponding peripheral must be set to enter active state.
- PTC is only available in devices with 8KB Flash (ATtiny816).

11.3.2.2 Wake-Up Time

The normal wake-up time for the device is 6 Main Clock cycles (CLK_PER), plus the time it takes to start up the Main Clock source:

- In Idle sleep mode the Main Clock source is kept running so it will not be any extra wake-up time.
- In Standby sleep mode the Main Clock might be running, so it depends on the peripheral configuration.
- In Power Down sleep mode only the ULP 32KHz oscillator and RTC clock may be running, if it is used by the BOD or WDT. All other clock sources will be off.

Table 11-3. Sleep modes and Start-up time

Sleep mode	Start-up time
IDLE	6 CLK
Standby	6 CLK + OSC start-up
Power Down	6 CLK + OSC start-up

The start-up time for the different clock sources is described in the Clock Controller (CLKCTRL) section.

In addition to the normal wake-up time it is possible to make the device wait until the BOD is ready before executing code. This is done by writing 0x3 to the BOD Operation Mode in Active and Idle bits (ACTIVE) in the BOD Configuration fuse (FUSE.BODCFG). If the BOD is ready before the normal wake-up time, the net wake-up time will be the same. If the BOD takes longer than the normal wake-up time, the wake-up time will be extended until the BOD is ready. This is ensures correct supply voltage whenever code is executed.

11.3.3 Configuration Change Protection

Not applicable.

11.4 Register Summary - SLPCTRL

Offset	Name	Bit Pos.								
0x00	CTRLA	7:0						SMODE[1:0]		SEN

11.5 Register Description

11.5.1 Control A

Name: CTRLA
Offset: 0x00
Reset: 0x00
Property: -

Bit	7	6	5	4	3	2	1	0
						SMODE[1:0]		SEN
Access	R	R	R	R	R	R/W	R/W	R/W
Reset	0	0	0	0	0	0	0	0

Bits 2:1 – SMODE[1:0] Sleep Mode
Writing these bits selects the sleep mode entered when the Sleep Enable bit (SEN) is written to '1' and the SLEEP instruction is executed.

Value	Name	Description
0x0	IDLE	Idle sleep mode enabled
0x1	STANDBY	Standby sleep mode enabled
0x2	PDOWN	Power Down sleep mode enabled
other	-	Reserved

Bit 0 – SEN Sleep Enable
This bit must be written to '1' before the SLEEP instruction is executed to make the MCU enter the selected sleep mode.

12. RSTCTRL - Reset Controller

12.1 Features

- Reset the device and set it to an initial state.
- Reset Flag register for identifying the Reset source in software.
- Multiple Reset sources:
  - Power supply Reset sources: Brownout Detect (BOD), Power On Reset (POR)
  - User Reset sources: External Reset pin ($\overline{\text{RESET}}$), Watchdog Reset (WDT), Software Reset (SW) and UPDI Reset.

12.2 Overview

The Reset Controller (RSTCTRL) manages the Reset of the device. It issues a device Reset, sets the device to its initial state, and allows the Reset source to be identified by software.

12.2.1 Block Diagram

Figure 12-1. Reset System Overview

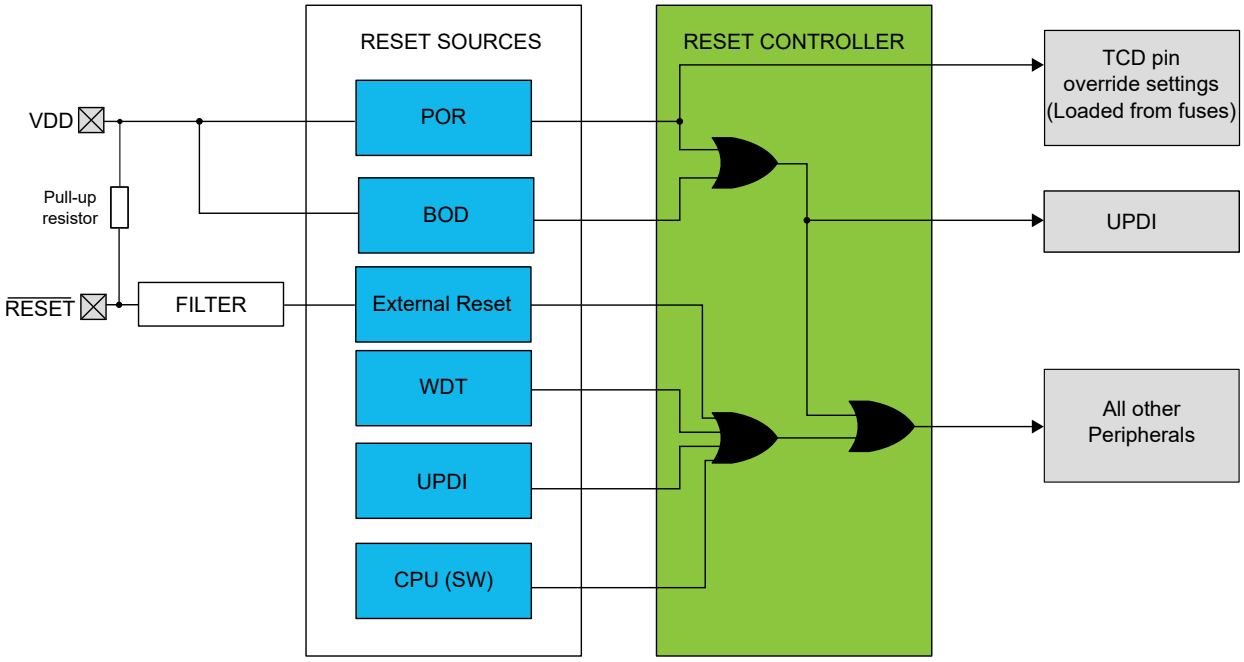

12.2.2 Signal Description

Signal	Description	Type
$\overline{\text{RESET}}$	External Reset (active low)	Digital input

12.3 Functional Description

12.3.1 Initialization

The Reset Controller (RSTCTRL) is always enabled, but some of the Reset sources must be enabled (either by fuses or by software) before they can request a Reset.

After any Reset, the Reset source that caused the Reset is found in the Reset Flag register (RSTCTRL.RSTFR).

After a Power-On Reset, only the POR flag will be set.

The flags are kept until they are cleared by writing a '1' to them.

After reset from any source, all registers that are loaded from fuses are reloaded.

12.3.2 Operation

12.3.2.1 Reset Sources

There are two kind of sources for Resets:

- Power supply Resets, which are caused by changes in the power supply voltage: Power-on Reset (POR) and Brownout Detector (BOD).
- User Resets, which are issued by the application, by debug operation or by pin changes (Software Reset, Watchdog Reset, UPDI Reset and external Reset pin $\overline{\text{RESET}}$).

12.3.2.1.1 Power-On Reset (POR)

A power-on-reset (POR) is generated by an on-chip detection circuit. The POR is activated when the V_{DD} rises until it reach the POR treshold voltage. The POR is always enabled and will also detect when the V_{DD} falls below the treshold voltage.

All logic is reset on POR. All fuses are reloaded after the reset is released. While POR is active, TCD pin override functionality is not available.

12.3.2.1.2 Brown-Out Detector (BOD) Reset Source

The on-chip Brown-out Detection circuit will monitor the V_{DD} level during operation by comparing it to a fixed trigger level. The trigger level for the BOD can be selected by fuses. If BOD is unused in the application, it is forced to a configured level in order to ensure safe operation during chip erase.

All logic is reset on BOD Reset, except the BOD configuration. All fuses are reloaded after the Reset is released.

Related Links

17. BOD - Brownout Detector

12.3.2.1.3 Software Reset

The software reset makes it possible to issue a system reset from software. The reset is generated by writing a '1' to the Software Reset Enable bit (SWRE) in the Software Reset register (RSTCTRL.SWRR).

The reset will take place immediately after the bit is written and the device will be kept in reset until the reset sequence is completed. All logic is reset on software reset, except UPDI, TCD pin override settings and BOD configuration. All fuses are reloaded after the reset is released.

12.3.2.1.4 External Reset

The External Reset is enabled by fuse (see fuse map).

When enabled, the External Reset requests a Reset as long as the $\overline{\text{RESET}}$ pin is low. The device will stay in Reset until $\overline{\text{RESET}}$ is high again. All logic is reset on external reset, except UPDI, TCD pin override settings and BOD configuration. All fuses are reloaded after the reset is released.

Related Links

6.9 FUSES - Configuration and User Fuses

12.3.2.1.5 Watchdog Reset

The watchdog timer (WDT) is a system function for monitoring correct program operation. If the WDT is not reset from software according to the programmed timeout period, a watchdog reset will be issued. See the WDT documentation for further details.

All logic is reset on WDT reset, except UPDI, TCD pin override settings and BOD configuration. All fuses are reloaded after the reset is released.

Related Links

19. WDT - Watchdog Timer

12.3.2.1.6 Universal Program Debug Interface (UPDI) Reset

The UPDI contains a separate reset source that is used to reset the device during external programming and debugging. The reset source is accessible only from external debuggers and programmers. All logic is reset on UPDI reset, except the UPDI itself, TCD pin override settings and BOD configuration. All fuses are reloaded after the reset is released. See UPDI chapter on how to generate a UPDI reset request.

Related Links

33. UPDI - Unified Program and Debug Interface

12.3.2.2 Reset time

The reset time can be split in two.

The first part is when any of the Reset sources are active. This part depends on the input to the Reset sources. The external reset is active as long as the $\overline{\text{RESET}}$ pin is low, the power-on-reset (POR) and Brownout detector (BOD) is active as long as the supply voltage is below reset source threshold.

When all the Reset sources are released an Internal reset initialization of the device is done. The time it take to do the Internal reset initialization is typical 250 µs. This time will be increased with the Start Up time given by the Start Up time fuse setting (SYSCFG1.SUT). The Internal reset initialization time will also increase if the CRC source is setup to run (SYSCFG0.CRCSRC). The additional Internal reset time will increase by 500 µs for each KB of memory that is checked.

12.3.3 Sleep Mode Operation

The Reset Controller continues to operate in all active and sleep modes.

12.3.4 Configuration Change Protection

This peripheral has registers that are under Configuration Change Protection (CCP). In order to write to these, a certain key must be written to the CPU.CCP register first, followed by a write access to the protected bits within four CPU instructions.

It is possible to try writing to these registers any time, but the values are not altered.

The following registers are under CCP:

Table 12-1. RSTCTRL - Registers under Configuration Change Protection

Register	Key
RSTCTRL.SWRR	IOREG

Related Links

8.5.7.1 Sequence for Write Operation to Configuration Change Protected I/O Registers

12.4 Register Summary - RSTCTRL

Offset	Name	Bit Pos.								
0x00	RSTFR	7:0			UPDIRF	SWRF	WDRF	EXTRF	BORF	PORF
0x01	SWRR	7:0								SWRE

12.5 Register Description

12.5.1 Reset Flag Register

Name: RSTFR
Offset: 0x00
Reset: 0xXX
Property: -

All flags are cleared by writing a '1' to them. They are also cleared by a Power-on Reset, with the exception of the Power-On Reset Flag (PORF).

Bit	7	6	5	4	3	2	1	0
			UPDIRF	SWRF	WDRF	EXTRF	BORF	PORF
Access	R	R	R/W	R/W	R/W	R/W	R/W	R/W
Reset	0	0	x	x	x	x	x	x

Bit 5 – UPDIRF UPDI Reset Flag
This bit is set if a UPDI Reset occurs.

Bit 4 – SWRF Software Reset Flag
This bit is set if a Software Reset occurs.

Bit 3 – WDRF Watchdog Reset Flag
This bit is set if a Watchdog Reset occurs.

Bit 2 – EXTRF External Reset Flag
This bit is set if an External reset occurs.

Bit 1 – BORF Brownout Reset Flag
This bit is set if a Brownout Reset occurs.

Bit 0 – PORF Power-On Reset Flag
This bit is set if a Power-on Reset occurs.
This flag is only cleared by writing a '1' it.
After a POR, only the POR flag is set and all other flags are cleared. No other flag can be set before a full system boot is run after the POR.

12.5.2 Software Reset Register

Name: SWRR
Offset: 0x01
Reset: 0x00
Property: Configuration Change Protection

Bit	7	6	5	4	3	2	1	0
								SWRE
Access	R	R	R	R	R	R	R	R/W
Reset	0	0	0	0	0	0	0	0

Bit 0 – SWRE Software Reset Enable
When this bit is written to '1', a software reset will occur.
This bit will always read as '0'.

13. CPUINT - CPU Interrupt Controller

13.1 Features

- Short and predictable interrupt response time
- Separate interrupt configuration and vector address for each interrupt
- Interrupt prioritizing by level and vector address
- Two interrupt priority levels: 0 (normal) and 1 (high)
- Higher priority for one interrupt
- Optional round-robin priority scheme for priority level 0 interrupts
- Non-maskable interrupts (NMI) for critical functions
- Interrupt vectors optionally placed in the application section or the boot loader section
- Selectable compact vector table

13.2 Overview

An interrupt request signals a change of state inside a peripheral, and can be used to alter program execution. Peripherals can have one or more interrupts, and all are individually enabled and configured.

When an interrupt is enabled and configured, it will generate an interrupt request when the interrupt condition occurs.

The CPU Interrupt Controller (CPUINT) handles and prioritizes interrupt requests. When an interrupt is enabled and the interrupt condition occurs, the CPUINT will receive the interrupt request. Based on the interrupt's priority level and the priority level of any ongoing interrupts, the interrupt request is either acknowledged or kept pending until it has priority. When an interrupt request is acknowledged by the CPUINT, the program counter is set to point to the interrupt vector. The interrupt vector is normally a jump to the interrupt handler (i.e., the software routine that handles the interrupt). After returning from the interrupt handler, program execution continues from where it was before the interrupt occurred. One instruction is always executed before any pending interrupt is served.

The CPUINT Status register (CPUINT.STATUS) contains state information that ensures that the CPUINT returns to the correct interrupt level when the `RETI` (interrupt return) instruction is executed at the end of an interrupt handler. Returning from an interrupt will return the CPUINT to the state it had before entering the interrupt. CPUINT.STATUS is not saved automatically upon an interrupt request.

By default, all peripherals are priority level 0. It is possible to set one single interrupt vector to the higher priority level 1. Interrupts are prioritized according to their priority level and their interrupt vector address. Priority level 1 interrupts will interrupt level 0 interrupt handlers. Among priority level 0 interrupts, the priority is determined from the interrupt vector address, where the lowest interrupt vector address has the highest interrupt priority.

Optionally, a round-robin scheduling scheme can be enabled for priority level 0 interrupts. This ensures that all interrupts are serviced within a certain amount of time.

Interrupt generation must be globally enabled by writing a '1' to the Global Interrupt Enable bit (I) in the CPU Status register (CPU.SREG). This bit is not cleared when an interrupt is acknowledged.

13.2.1 Block Diagram

Figure 13-1. CPUINT Block Diagram

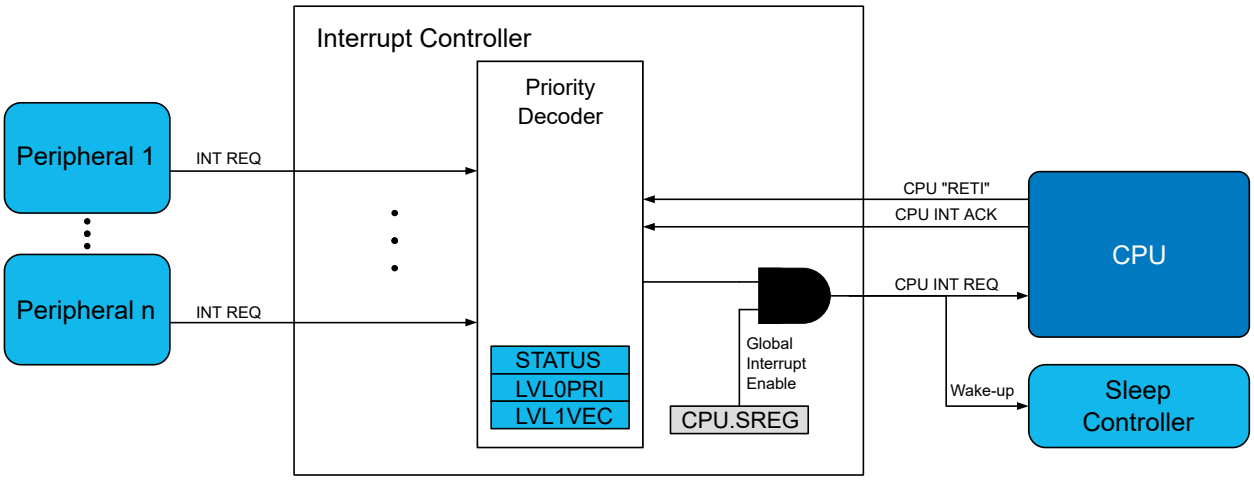

13.2.2 Signal Description

Not applicable.

13.2.3 System Dependencies

In order to use this peripheral, other parts of the system must be configured correctly, as described below.

Table 13-1. CPUINT System Dependencies

Dependency	Applicable	Peripheral
Clocks	Yes	CLKCTRL
I/O Lines and Connections	No	-
Interrupts	No	-
Events	No	-
Debug	Yes	UPDI

Related Links

13.2.3.5 Debug Operation
13.2.3.1 Clocks

13.2.3.1 Clocks

This peripheral depends on the peripheral clock.

Related Links

10. CLKCTRL - Clock Controller

13.2.3.2 I/O Lines and Connections

Not applicable.

13.2.3.3 Interrupts

Not applicable.

13.2.3.4 Events

Not applicable.

13.2.3.5 Debug Operation

When run-time debugging, this peripheral will continue normal operation. Halting the CPU in debugging mode will halt normal operation of the peripheral.

If the peripheral is configured to require periodical service by the CPU through interrupts or similar, improper operation or data loss may result during halted debugging.

Related Links

33. UPDI - Unified Program and Debug Interface

13.3 Functional Description

13.3.1 Initialization

An interrupt must be initialized in the following order:

1. Configure the CPUINT if the default configuration is not adequate (optional):
   - Vector handling is configured by writing to the respective bits (IVSEL and CVT) in the Control A register (CPUINT.CTRLA).
   - Vector prioritizing by round-robin is enabled by writing a '1' to the Round-Robin Priority Enable bit (LVL0RR) in CPUINT.CTRLA.
   - Select the priority level 1 vector by writing its address to the Interrupt Vector (LVL1VEC) in the Level 1 Priority register (CPUINT.LVL1VEC).
2. Configure the interrupt conditions within the peripheral, and enable the peripheral's interrupt.
3. Enable interrupts globally by writing a '1' to the Global Interrupt Enable bit (I) in the CPU Status register (CPU.SREG).

13.3.2 Operation

13.3.2.1 Enabling, Disabling, and Resetting

Global enabling of interrupts is done by writing a '1' to the Global Interrupt Enable bit (I) in the CPU Status register (CPU.SREG). To disable interrupts globally, write a '0' to the I bit in CPU.SREG.

The desired interrupt lines must also be enabled in the respective peripheral, by writing to the peripheral's Interrupt Control register ([peripheral].INTCTRL).

Interrupt flags are not automatically cleared after the interrupt is executed. The respective INTFLAGS register descriptions provide information on how to clear specific flags.

13.3.2.2 Interrupt Vector Locations

The table below shows Reset addresses and Interrupt vector placement, dependent on the value of Interrupt Vector Select bit (IVSEL) in the Control A register (CPUINT.CTRLA).

If the program never enables an interrupt source, the Interrupt Vectors are not used, and regular program code can be placed at these locations.

Table 13-2. Reset and Interrupt Vector Placement

IVSEL	Reset address	Interrupt vectors start address
0	0x0000	Application start address + Interrupt vector offset address
1	0x0000	Interrupt vector offset address

13.3.2.3 Interrupt Response Time

The minimum interrupt response time for all enabled interrupts is three CPU clock cycles: one cycle to finish the ongoing instruction, and two cycles to store the program counter to the stack. After the program counter is pushed on the stack, the program vector for the interrupt is executed. See also figure below, first diagram.

The jump to the interrupt handler takes three clock cycles. If an interrupt occurs during execution of a multicycle instruction, this instruction is completed before the interrupt is served. See also figure below, second diagram.

Figure 13-2. Interrupt Execution of a Single Cycle Instruction, Multicycle Instruction and from Sleep

Single Cycle Instruction

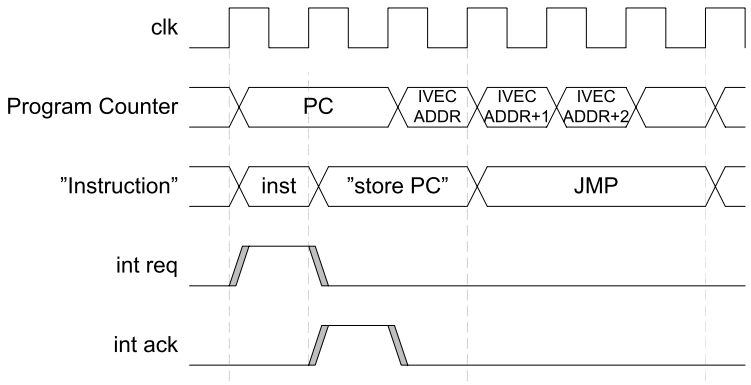

Multicycle Instruction

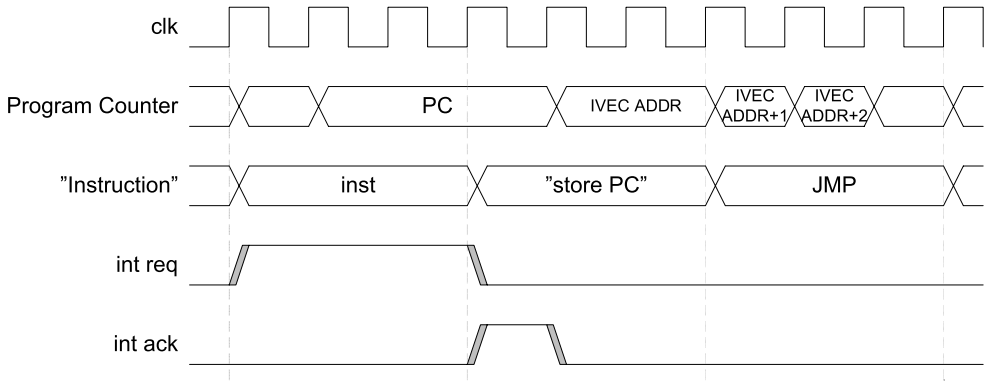

Sleep

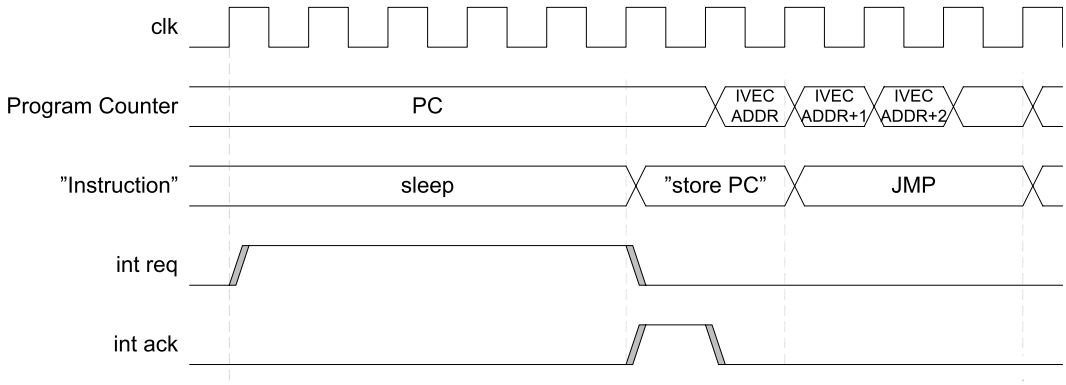

If an interrupt occurs when the device is in sleep mode, the interrupt execution response time is increased by five clock cycles. In addition, the response time is increased by the start-up time from the selected sleep mode.

A return from an interrupt handling routine takes four to five clock cycles, depending on the size of the program counter. During these clock cycles, the program counter is popped from the stack and the stack pointer is incremented. See also figure above, bottom diagram.

13.3.2.4 Interrupt Level

The interrupt level is default on level 0 (normal) for all interrupt sources. It is possible to select one interrupt source to level 1 (high) by writing interrupt address to CPUINT.LVL1VEC register. This source will have higher priority than normal level interrupts.

An interrupt request from a level 1 source will interrupt any ongoing interrupt handler from a level 0 interrupt. When returning from the level 1 interrupt handler, the execution of the level 0 interrupt handler will continue.

13.3.2.5 Interrupt Priority

13.3.2.5.1 NMI - Non-Maskable Interrupts

An NMI will be executed regardless of the setting of the I bit in CPU.SREG, and it will never change the I bit. No other interrupt can interrupt a NMI handler. If more than one NMI is requested at the same time, priority is static according to the interrupt vector address, where the lowest address has highest priority.

Which interrupts are non-maskable is device-dependent and not subject to configuration. Non-maskable interrupts must be enabled before they can be used. Refer to the Interrupt Vector Mapping of the device for available NMI lines.

Related Links

7.2 Interrupt Vector Mapping

13.3.2.5.2 Static Priority

Interrupt vectors (IVEC) are located at fixed addresses. For static priority, the interrupt vector address decides the priority within normal interrupt level, where the lowest interrupt vector address has the highest priority. Refer to the Interrupt Vector Mapping of the device for available interrupt lines and their base address offset.

Figure 13-3. Static Priority

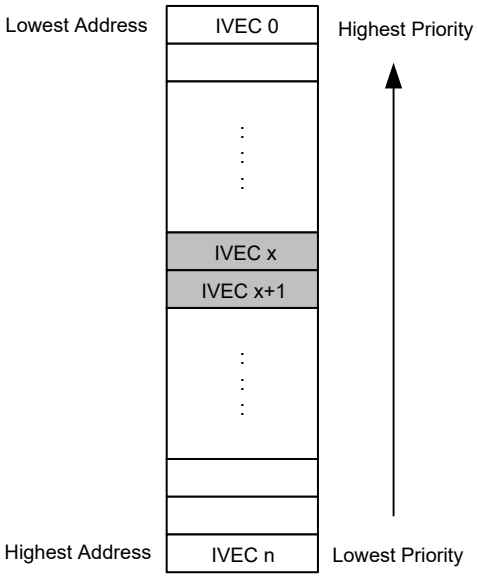

Related Links

7.2 Interrupt Vector Mapping

13.3.2.5.3 Round-Robin Scheduling

To avoid "starvation" for priority level 0 (LVL0) interrupt requests with static priority, i.e. some interrupts might never be served, the CPUINT offers round-robin scheduling for LVL0 interrupts.

Round-robin scheduling for LVL0 interrupt requests is enabled by writing a '1' to the Round-Robin Priority Enable bit (LVL0RR) in the Control A register (CPUINT.CTRLA).

When round-robin scheduling is enabled, the interrupt vector address for the last acknowledged LVL0 interrupt will have the lowest priority the next time one or more LVL0 interrupts are requested, as illustrated in the figure below.

Figure 13-4. Round-Robin Scheduling

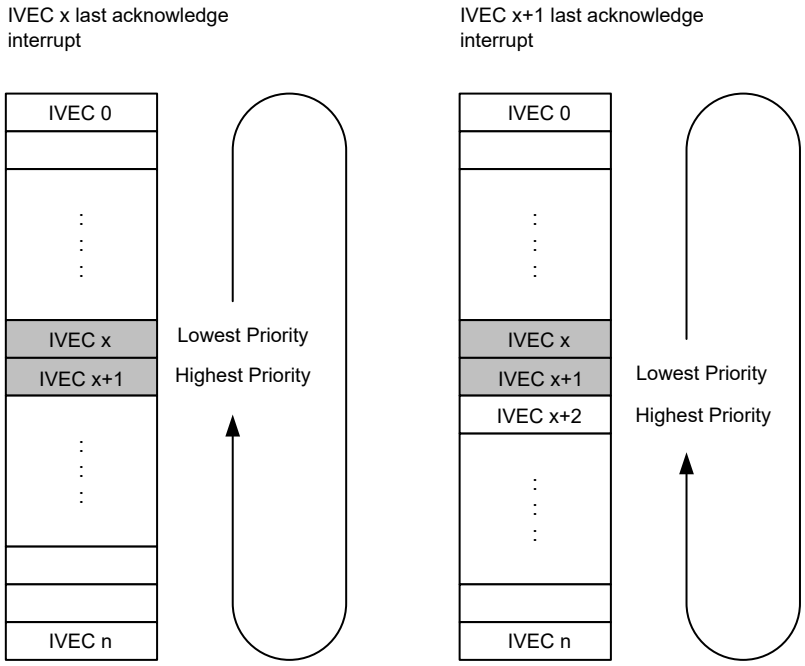

13.3.2.5.4 Compact Vector Table

The Compact Vector Table (CVT) is a feature to allow for writing of compact code.

When CVT is enabled by writing a '1' to the CVT bit in the Control A register (CPUINT.CTRLA), the vector table contains these three interrupt vectors:

1. The non-maskable interrupts (NMI) at vector address 1
2. The priority level 1 (LVL1) interrupt at vector address 2
3. All priority level 0 (LVL0) interrupts share vector address 3.

This feature is most suitable for applications using a small number of interrupt generators.

13.3.3 Events

Not applicable.

13.3.4 Sleep Mode Operation

Not applicable.

13.3.5 Configuration Change Protection

This peripheral has registers that are under Configuration Change Protection (CCP). In order to write to these, a certain key must be written to the CPU.CCP register first, followed by a write access to the protected bits within four CPU instructions.

It is possible to try writing to these registers any time, but the values are not altered.

The following registers are under CCP:

Table 13-3. INTCTRL - Registers under Configuration Change Protection

Register	Key
IVSEL in CPUINT.CTRLA	IOREG
CVT in CPUINT.CTRLA	IOREG

Related Links

8.5.7.1 Sequence for Write Operation to Configuration Change Protected I/O Registers

13.4 Register Summary - CPUINT

Offset	Name	Bit Pos.								
0x00	CTRLA	7:0		IVSEL	CVT					LVL0RR
0x01	STATUS	7:0	NMIEX						LVL1EX	LVL0EX
0x02	LVL0PRI	7:0	LVL0PRI[7:0]							
0x03	LVL1VEC	7:0	LVL1VEC[7:0]							

13.5 Register Description

13.5.1 Control A

Name: CTRLA
Offset: 0x00
Reset: 0x00
Property: Configuration Change Protection

Bit	7	6	5	4	3	2	1	0
		IVSEL	CVT					LVL0RR
Access		R/W	R/W					R/W
Reset		0	0					0

Bit 6 – IVSEL Interrupt Vector Select
If boot section is defined, it will be placed before application section. The actual start address of the application section is determined by the BOOTEND Fuse.
This bit is protected by the Configuration Change Protection mechanism.

Value	Description
0	Interrupt vectors are placed at the start of the application section of the Flash.
1	Interrupt vectors are placed at the start of the boot section of the Flash.

Bit 5 – CVT Compact Vector Table
This bit is protected by the Configuration Change Protection mechanism.

Value	Description
0	Compact Vector Table function is disabled
1	Compact Vector Table function is enabled

Bit 0 – LVL0RR Round-Robin Priority Enable
This bit is not protected by the Configuration Change Protection mechanism.

Value	Description
0	Priority is fixed for priority level 0 interrupt requests: The lowest interrupt vector address has highest priority.
1	Round Robin priority scheme is enabled for priority level 0 interrupt requests.

13.5.2 Status

Name: STATUS
Offset: 0x01
Reset: 0x00
Property: -

Bit	7	6	5	4	3	2	1	0
	NMIEX						LVL1EX	LVL0EX
Access	R						R	R
Reset	0						0	0

Bit 7 – NMIEX Non-Maskable Interrupt Executing
This flag is set if a non-maskable interrupt is executing. The flag is cleared when returning (RETI) from the interrupt handler.

Bit 1 – LVL1EX Level 1 Interrupt Executing
This flag is set when a priority level 1 interrupt is executing, or when the interrupt handler has been interrupted by an NMI. The flag is cleared when returning (RETI) from the interrupt handler.

Bit 0 – LVL0EX Level 0 Interrupt Executing
This flag is set when a priority level 0 interrupt is executing, or when the interrupt handler has been interrupted by a priority level 1 interrupt or an NMI. The flag is cleared when returning (RETI) from the interrupt handler.

13.5.3 Interrupt Priority Level 0

Name: LVL0PRI
Offset: 0x02
Reset: 0x00
Property: -

Bit	7	6	5	4	3	2	1	0
	LVL0PRI[7:0]							
Access	R/W	R/W	R/W	R/W	R/W	R/W	R/W	R/W
Reset	0	0	0	0	0	0	0	0

Bits 7:0 – LVL0PRI[7:0] Interrupt Priority Level 0
When Round Robin is enabled (LVL0RR bit in CPUINT.CTRLA is '1'), this bit field stores the vector of the last acknowledged priority level 0 (LVL0) interrupt. The stored vector will have the lowest priority next time one or more LVL0 interrupts are pending.
If Round Robin is disabled (LVL0RR in CPUINT.CTRLA is '0'), the vector address based priority scheme (lowest address has highest priority) is governing the priorities of LVL0 interrupt requests.
If a system Reset is asserted, the lowest interrupt vector address will have highest priority within the LVL0.

13.5.4 Interrupt Vector with Priority Level 1

Name: LVL1VEC
Offset: 0x03
Reset: 0x00
Property: -

Bit	7	6	5	4	3	2	1	0
	LVL1VEC[7:0]							
Access	R/W	R/W	R/W	R/W	R/W	R/W	R/W	R/W
Reset	0	0	0	0	0	0	0	0

Bits 7:0 – LVL1VEC[7:0] Interrupt Vector with Priority Level 1
This bit field contains the address of the single vector with increased priority level 1 (LVL1).
If this bit field has the value 0x00, no vector has LVL1. Consequently, the LVL1 interrupt is disabled.

14. EVSYS - Event System

14.1 Features

- System for direct peripheral-to-peripheral signaling
- Peripherals can directly produce, use, and react to peripheral events
- Short and guaranteed response time
- Up to six parallel Event channels available; 4 asynchronous- and 2 synchronous
- Channels can be configured to have one triggering peripheral action and multiple peripheral users
- Peripherals can directly trigger and react to Events from other peripherals
- Events can be sent and/or received by most peripherals, and by software
- Works in active mode and standby sleep mode

14.2 Overview

The Event System (EVSYS) enables direct peripheral-to-peripheral signaling. It allows a change in one peripheral (the Event Generator) to trigger actions in other peripherals (the Event Users) through Event channels, without using the CPU. It is designed to provide short and predictable response times between peripherals, allowing for autonomous peripheral control and interaction, and also for synchronized timing of actions in several peripheral modules. It is thus a powerful tool for reducing the complexity, size, and execution time of the software.

A change of the Event Generator's state is referred to as an Event, and usually corresponds to one of the peripheral's interrupt conditions. Events can be directly forwarded to other peripherals using the dedicated Event routing network. The routing of each channel is configured in software, including event generation and use.

Only one trigger from an Event generator peripheral can be routed on each channel, but multiple channels can use the same generator source. Multiple peripherals can use events from the same channel.

A channel path can be either asynchronous or synchronous to the main clock. The mode must be selected based on the requirements of the application.

The Event System can directly connect analog and digital converters, analog comparators, I/O port pins, the real-time counter, timer/counters, and the configurable custom logic peripheral. Events can also be generated from software and the peripheral clock.

14.2.1 Block Diagram

Figure 14-1. Block Diagram

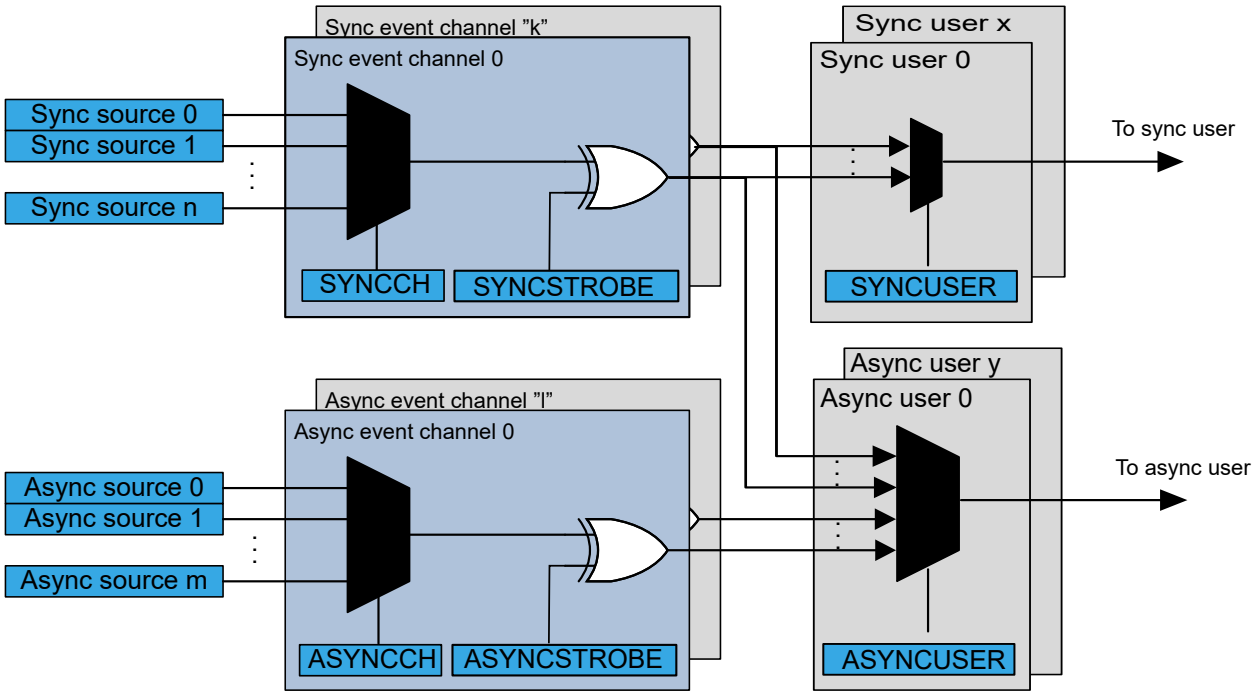

Figure 14-2. Example of Event Source, Generator, User, and Action

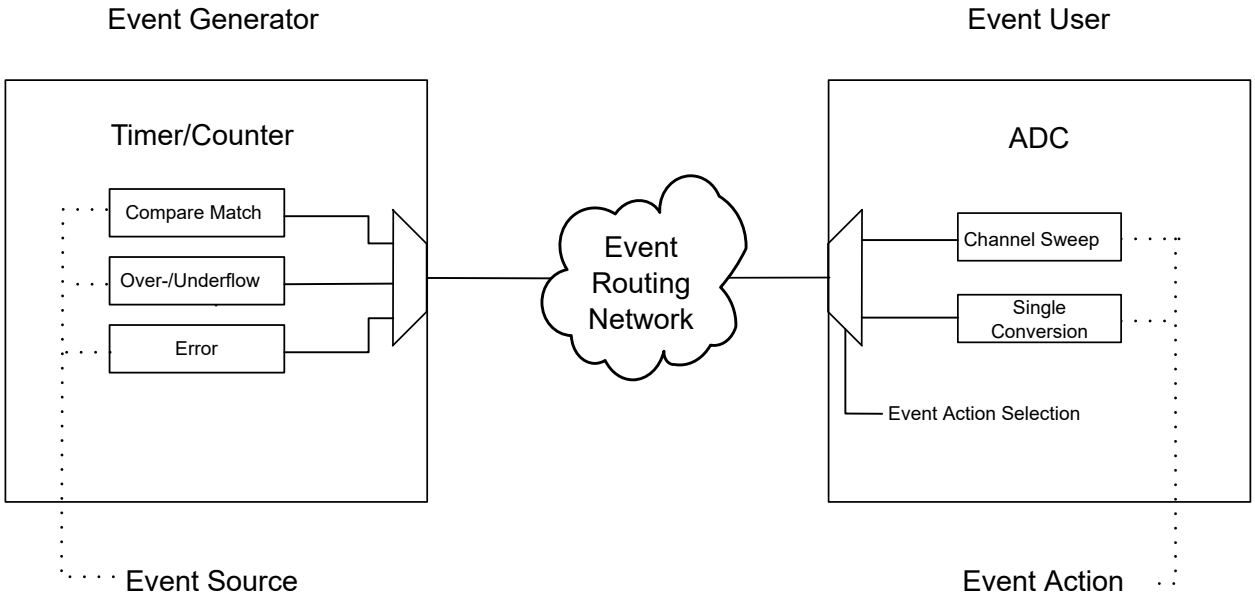

Note:

1. For an overview of peripherals supporting Events, refer the Block Diagram of the device.
2. For a list of Event Generators, refer to the Channel n Generator Selection registers (EVSYS.SYNCCH and EVSYS.ASYNCCH).
3. For a list of Event Users, refer to the User Channel n Input Selection registers (EVSYS.SYNCUSER and EVSYS.ASYNCUSER).

Related Links

3. Block Diagram
14.5.4 SYNCCH

14.5.3 ASYNCCH
14.5.6 SYNCUSER
14.5.5 ASYNCUSER

14.2.2 Signal Description

Internal Event Signaling
The Event signaling can either happen synchronously to the main clock (CLK_MAIN), or asynchronously to it.

Depending on the underlying event, the Event signal can be a pulse with a duration of 1 clock cycle, or a level signal (similar to a status flag).

Event Output to Pin

Signal	Type	Description
EVOUT[2:0]	Digital output	Event output

Related Links
14.2.3.2 I/O Lines
10.2.1 Block Diagram - CLKCTRL

14.2.3 System Dependencies

In order to use this peripheral, other parts of the system must be configured correctly, as described below.

Table 14-1. EVSYS System Dependencies

Dependency	Applicable	Peripheral
Clocks	Yes	CLKCTRL
I/O Lines and Connections	Yes	PORTMUX
Interrupts	No	-
Events	Yes	EVSYS
Debug	Yes	UPDI

Related Links
14.2.3.1 Clocks
14.3.5 Debug Operation

14.2.3.1 Clocks

The EVSYS uses the peripheral clock for I/O registers and software events. When set up correctly, the routing network can be used also in sleep modes without any clock. Software Events will not work in sleep modes where the peripheral clock is halted.

Related Links
10. CLKCTRL - Clock Controller

14.2.3.2 I/O Lines

The EVSYS can output three event channels asynchronously on pins. The output signals are called EVOUT[2:0].

1. Configure which event channel (one of SYNCCH[1:0] or ASYNCCH[3:0]) is output on which the EVOUTn by writing to EVSYS.ASYNCUSER10, EVSYS.ASYNCUSER9 or EVSYS.ASYNCUSER8 respectively.
2. Optional: configure the pin properties using the PORT peripheral.
3. Enable the pin output by writing '1' to the respective EVOUTn bit in the Control A register of the PORTMUX peripheral (PORTMUX.CTRLA).

Related Links

15. PORTMUX - Port Multiplexer
16. PORT - I/O Pin Configuration
14.5.5 ASYNCUSER

14.3 Functional Description

14.3.1 Initialization

Before enabling Events within the device, the Event Users Multiplexer and Event Channels must be configured.

Related Links
14.3.2.1 Event User Multiplexer Setup
14.3.2.2 Event System Channel

14.3.2 Operation

14.3.2.1 Event User Multiplexer Setup

The Event User multiplexer selects the channel for an Event User. Each Event User has one dedicated Event User multiplexer. Each multiplexer is connected to the supported Event channel outputs, and can be configured to select one of these channels.

Event Users which support asynchronous Events also support synchronous Events. There are also Event Users that support only synchronous Events.

The Event User multiplexers are configured by writing to the corresponding registers:

- Event Users supporting both synchronous and asynchronous Events are configured by writing to the respective asynchronous User Channel Input Selection n register (EVSYS.ASYNCUSERn).
- The users of synchronous-only Events are configured by writing to the respective Synchronous User Channel Input Selection n register (EVSYS.SYNCUSERn).

Default setup of all user multiplexers is Off.

14.3.2.2 Event System Channel

An Event channel can be connected to one of the Event generators. Event channels either support asynchronous generators or synchronous generators.

The source for each asynchronous Event channel is configured by writing to the respective Asynchronous Channel n Input Selection register (EVSYS.ASYNCCHn).

The source for each synchronous Event channel is configured by writing to the respective Synchronous Channel n Input Selection register (EVSYS.SYNCCHn).

14.3.2.3 Event Generators

Each Event channel can receive the Events from several Event generators. For details on Event generation, refer to the documentation of the corresponding peripheral.

For each Event channel, there are several possible Event generators, only one of which can be selected at a time. The Event generator trigger is selected for each channel by writing to the respective channel registers (EVSYS.ASYNCCHn, EVSYS.SYNCCHn). By default, the channels are not connected to any Event generator.

14.3.2.4 Software Event

In a Software Event, the CPU will “strobe” an Event channel by inverting the current value for one system clock cycle.

A Software Event is triggered on a channel by writing a '1' to the respective Strobe bit in the appropriate Channel Strobe register:

- Software Events on asynchronous channel *l* are initiated by writing a '1' to the ASYNCSTROBE[*l*] bit in the Asynchronous Channel Strobe register (EVSYS.ASYNCSTROBE).
- Software Events on synchronous channel *k* are initiated by writing a '1' to the SYNCSTROBE[*k*] bit in the Synchronous Channel Strobe register (EVSYS.SYNCSTROBE).

Software Events are no different to those produced by Event generator peripherals with respect to Event users: when the bit is written to '1', an Event will be generated on the respective channel, and received and processed by the Event User.

14.3.3 Interrupts

Not applicable.

14.3.4 Sleep Mode Operation

When configured, the Event System will work in all sleep modes. One exception are software Events which require a system clock.

14.3.5 Debug Operation

This peripheral is unaffected by entering debug mode.

Related Links

33. UPDI - Unified Program and Debug Interface

14.3.6 Synchronization

Asynchronous Events are synchronized and handled by the compatible Event users. Event User peripherals not compatible with asynchronous Events can only be configured to listen to synchronous Event channels.

14.3.7 Configuration Change Protection

Not applicable.

Related Links

8.5.7.1 Sequence for Write Operation to Configuration Change Protected I/O Registers

14.4 Register Summary - EVSYS

Offset	Name	Bit Pos.									
0x00	ASYNCSTROBE	7:0	ASYNCSTROBE[7:0]								
0x01	SYNCSTROBE	7:0	SYNCSTROBE[7:0]								
0x02	ASYNCCH0	7:0	ASYNCCH[7:0]								
0x03	ASYNCCH1	7:0	ASYNCCH[7:0]								
0x04	ASYNCCH2	7:0	ASYNCCH[7:0]								
0x05	ASYNCCH3	7:0	ASYNCCH[7:0]								
0x06 ... 0x09	Reserved										
0x0A	SYNCCH0	7:0	SYNCCH[7:0]								
0x0B	SYNCCH1	7:0	SYNCCH[7:0]								
0x0C ... 0x11	Reserved										
0x12	ASYNCUSER0	7:0	ASYNCUSER[7:0]								
...											
0x1C	ASYNCUSER10	7:0	ASYNCUSER[7:0]								
0x1D ... 0x21	Reserved										
0x22	SYNCUSER0	7:0	SYNCUSER[7:0]								
0x23	SYNCUSER1	7:0	SYNCUSER[7:0]								

14.5 Register Description

14.5.1 Asynchronous Channel Strobe

Name: ASYNCSTROBE
Offset: 0x00
Reset: 0x00
Property: -

Bit	7	6	5	4	3	2	1	0
	ASYNCSTROBE[7:0]							
Access	R/W	R/W	R/W	R/W	R/W	R/W	R/W	R/W
Reset	0	0	0	0	0	0	0	0

Bits 7:0 – ASYNCSTROBE[7:0] Asynchronous Channel Strobe
If the strobe register location is written, each Event channel will be inverted for one system clock cycle, i.e. a single Event is generated.

14.5.2 Synchronous Channel Strobe

Name: SYNCSTROBE
Offset: 0x01
Reset: 0x00
Property: -

Bit	7	6	5	4	3	2	1	0
	SYNCSTROBE[7:0]							
Access	R/W	R/W	R/W	R/W	R/W	R/W	R/W	R/W
Reset	0	0	0	0	0	0	0	0

Bits 7:0 – SYNCSTROBE[7:0] Synchronous Channel Strobe
If the strobe register location is written, each Event channel will be inverted for one system clock cycle, i.e. a single event is generated.

14.5.3 Asynchronous Channel n Generator Selection

Name: ASYNCCH
Offset: 0x02 + n*0x01 [n=0..3]
Reset: 0x00
Property: -

Bit	7	6	5	4	3	2	1	0
	ASYNCCH[7:0]							
Access	R/W	R/W	R/W	R/W	R/W	R/W	R/W	R/W
Reset	0	0	0	0	0	0	0	0

Bits 7:0 – ASYNCCH[7:0] Asynchronous Channel Generator Selection

Table 14-2. Asynchronous Channel Generator selection

Value	ASYNCCH0	ASYNCCH1	ASYNCCH2	ASYNCCH3
0x00	OFF	OFF	OFF	OFF
0x01	CCL_LUT0			
0x02	CCL_LUT1			
0x03	AC0_OUT			
0x04	TCD0_CMPBCLR			
0x05	TCD0_CMPASET			
0x06	TCD0_CMPBSET			
0x07	TCD0_PROGEV			
0x08	RTC_OVF			
0x09	RTC_CMP			
0x0A	PORTA_PIN0	PORTB_PIN0	PORTC_PIN0	PIT_DIV8192
0x0B	PORTA_PIN1	PORTB_PIN1	PORTC_PIN1	PIT_DIV4096
0x0C	PORTA_PIN2	PORTB_PIN2	PORTC_PIN2	PIT_DIV2048
0x0D	PORTA_PIN3	PORTB_PIN3	PORTC_PIN3	PIT_DIV1024
0x0E	PORTA_PIN4	PORTB_PIN4	PORTC_PIN4	PIT_DIV512
0x0F	PORTA_PIN5	PORTB_PIN5	PORTC_PIN5	PIT_DIV256
0x10	PORTA_PIN6	PORTB_PIN6		PIT_DIV128
0x11	PORTA_PIN7	PORTB_PIN7		PIT_DIV64
0x12	UPDI		-	
Other	-	-	-	-

14.5.4 Synchronous Channel n Generator Selection

Name: SYNCCH
Offset: 0x0A + n*0x01 [n=0..1]
Reset: 0x00
Property: -

Bit	7	6	5	4	3	2	1	0
	SYNCCH[7:0]							
Access	R/W	R/W	R/W	R/W	R/W	R/W	R/W	R/W
Reset	0	0	0	0	0	0	0	0

Bits 7:0 – SYNCCH[7:0] Synchronous Channel Generator Selection

Table 14-3. Synchronous Channel Generator selection

Value	SYNCCH0	SYNCCH1
0x00	OFF	
0x01	TCB0	
0x02	TCA0_OVF_LUNF	
0x03	TCA0_HUNF	
0x04	TCA0_CMP0	
0x05	TCA0_CMP1	
0x06	TCA0_CMP2	
0x07	PORTC_PIN0	-
0x08	PORTC_PIN1	PORTB_PIN0
0x09	PORTC_PIN2	PORTB_PIN1
0x0A	PORTC_PIN3	PORTB_PIN2
0x0B	PORTC_PIN4	PORTB_PIN3
0x0C	PORTC_PIN5	PORTB_PIN4
0x0D	PORTA_PIN0	PORTB_PIN5
0x0E	PORTA_PIN1	PORTB_PIN6
0x0F	PORTA_PIN2	PORTB_PIN7
0x10	PORTA_PIN3	
0x11	PORTA_PIN4	-
0x12	PORTA_PIN5	-
0x13	PORTA_PIN6	-
0x14	PORTA_PIN7	-
Other	-	-

© 2019 Microchip Technology Inc.

14.5.5 Asynchronous User Channel n Input Selection

Name: ASYNCUSER
Offset: 0x12 + n*0x01 [n=0..10]
Reset: 0x00
Property: -

Bit	7	6	5	4	3	2	1	0
	ASYNCUSER[7:0]							
Access	R/W	R/W	R/W	R/W	R/W	R/W	R/W	R/W
Reset	0	0	0	0	0	0	0	0

Bits 7:0 – ASYNCUSER[7:0] Asynchronous User Channel Selection

Table 14-4. User Multiplexer Numbers

USERn	User Multiplexer	Description
n=0	TCB0	Timer/Counter B 0
n=1	ADC0	ADC 0
n=2	CCL_LUT0EV0	CCL LUT0 Event 0
n=3	CCL_LUT1EV0	CCL LUT1 Event 0
n=4	CCL_LUT0EV1	CCL LUT0 Event 1
n=5	CCL_LUT1EV1	CCL LUT1 Event 1
n=6	TCD0_EV0	Timer Counter D 0 Event 0
n=7	TCD0_EV1	Timer Counter D 0 Event 1
n=8	EVOUT0	Event OUT 0
n=9	EVOUT1	Event OUT 1
n=10	EVOUT2	Event OUT 2

Value	Description
0x0	OFF
0x1	SYNCCH0
0x2	SYNCCH1
0x3	ASYNCCH0
0x4	ASYNCCH1
0x5	ASYNCCH2
0x6	ASYNCCH3

14.5.6 Synchronous User Channel n Input Selection

Name: SYNCUSER
Offset: 0x22 + n*0x01 [n=0..1]
Reset: 0x00
Property: -

Bit	7	6	5	4	3	2	1	0
	SYNCUSER[7:0]							
Access	R/W	R/W	R/W	R/W	R/W	R/W	R/W	R/W
Reset	0	0	0	0	0	0	0	0

Bits 7:0 – SYNCUSER[7:0] Synchronous User Channel Selection

Table 14-5. User Multiplexer Numbers

USERn	User Multiplexer	Description
n=0	TCA0	Timer/Counter A
n=1	USART0	USART

Value	Name
0x0	OFF
0x1	SYNCCH0
0x2	SYNCCH1

15. PORTMUX - Port Multiplexer

15.1 Overview

The Port Multiplexer (PORTMUX) can either enable or disable functionality of pins, or change between default and alternative pin positions. This depends on the actual pin and property, and is described in detail in the PORTMUX register map.

For available pins and functionalities, refer to the Multiplexed Signals table.

Related Links

5. I/O Multiplexing and Considerations

15.2 Register Summary - PORTMUX

Offset	Name	Bit Pos.								
0x00	CTRLA	7:0			LUT1	LUT0		EVOUT2	EVOUT1	EVOUT0
0x01	CTRLB	7:0				TWI0		SPI0		USART0
0x02	CTRLC	7:0			TCA05	TCA04	TCA03	TCA02	TCA01	TCA00
0x03	CTRLD	7:0								TCB0

15.3 Register Description

15.3.1 Control A

Name: CTRLA
Offset: 0x00
Reset: 0x00
Property: -

Bit	7	6	5	4	3	2	1	0
			LUT1	LUT0		EVOUT2	EVOUT1	EVOUT0
Access			R/W	R/W		R/W	R/W	R/W
Reset			0	0		0	0	0

Bit 5 – LUT1 CCL LUT 1 output
Write this bit to '1' to select alternative pin location for CCL LUT 1.

Bit 4 – LUT0 CCL LUT 0 output
Write this bit to '1' to select alternative pin location for CCL LUT 0.

Bit 2 – EVOUT2 Event Output 2
Write this bit to '1' to enable event output 2.

Bit 1 – EVOUT1 Event Output 1
Write this bit to '1' to enable event output 1.

Bit 0 – EVOUT0 Event Output 0
Write this bit to '1' to enable event output 0.

15.3.2 Control B

Name: CTRLB
Offset: 0x01
Reset: 0x00
Property: -

Bit	7	6	5	4	3	2	1	0
				TWI0		SPI0		USART0
Access				R/W		R/W		R/W
Reset				0		0		0

Bit 4 – TWI0 TWI 0 communication
Write this bit to '1' to select alternative communication pins for TWI 0.

Bit 2 – SPI0 SPI 0 communication
Write this bit to '1' to select alternative communication pins for SPI 0.

Bit 0 – USART0 USART 0 communication
Write this bit to '1' to select alternative communication pins for USART 0.

15.3.3 Control C

Name: CTRLC
Offset: 0x02
Reset: 0x00
Property: -

Bit	7	6	5	4	3	2	1	0
			TCA05	TCA04	TCA03	TCA02	TCA01	TCA00
Access			R/W	R/W	R/W	R/W	R/W	R/W
Reset			0	0	0	0	0	0

Bit 5 – TCA05 TCA0 Waveform output 5
Write this bit to '1' to select alternative output pin for TCA0 waveform output 5 in split mode.
Not applicable when TCA in normal mode.

Bit 4 – TCA04 TCA0 Waveform output 4
Write this bit to '1' to select alternative output pin for TCA0 waveform output 4 in split mode.
Not applicable when TCA in normal mode.

Bit 3 – TCA03 TCA0 Waveform output 3
Write this bit to '1' to select alternative output pin for TCA0 waveform output 3 in split mode.
Not applicable when TCA in normal mode.

Bit 2 – TCA02 TCA0 Waveform output 2
Write this bit to '1' to select alternative output pin for TCA0 waveform output 2.
In Split Mode, this bit controls output from low-byte compare channel 2.

Bit 1 – TCA01 TCA0 Waveform output 1
Write this bit to '1' to select alternative output pin for TCA0 waveform output 1.
In Split Mode, this bit controls output from low-byte compare channel 1.

Bit 0 – TCA00 TCA0 Waveform output 0
Write this bit to '1' to select alternative output pin for TCA0 waveform output 0.
In Split Mode, this bit controls output from low-byte compare channel 0.

15.3.4 Control D

Name: CTRLD
Offset: 0x03
Reset: 0x00
Property: -

Bit	7	6	5	4	3	2	1	0
								TCB0
Access								R/W
Reset								0

Bit 0 – TCB0 TCB0 output
Write this bit to '1' to select alternative output pin for 16-bit timer/counter B 0.

16. PORT - I/O Pin Configuration

16.1 Features

- General purpose input and output pins with individual configuration
- Output driver with configurable inverted I/O and pullup.
- Input with interrupts and events:
  - Sense both edges
  - Sense rising edges
  - Sense falling edges
  - Sense low level
- Asynchronous pin change sensing that can wake the device from all sleep modes
- Efficient and safe access to PORT pins
  - Hardware read-modify-write through dedicated toggle/clear/set registers
  - Mapping of often-used PORT registers into bit-accessible I/O memory space (Virtual Ports)

16.2 Overview

The I/O pins of the device are controlled by instances of the PORT peripheral registers. This device has the following instances of the I/O Pin Configuration (PORT): PORTA, PORTB, and PORTC.

Refer to the I/O Multiplexing table to see which pins are controlled by what instance of PORT. The offsets of the PORT instances and of the corresponding Virtual PORT instances are listed in the Peripherals and Architecture section.

Each of the port pins has a corresponding bit in the Data Direction (PORT.DIR) and Data Output Value (PORT.OUT) registers to enable that pin as an output and to define the output state. For example, pin PA3 is controlled by DIR[3] and OUT[3] of the PORTA instance.

The Data Input Value (PORT.IN) is set as the input value of a PORT pin with resynchronization to the Main Clock. To reduce power consumption, these input synchronizers are not clocked if the Input Sense Configuration bit field (ISC) in PORT.PINnCTRL is INPUT_DISABLE. The value of the pin can always be read, whether the pin is configured as input or output.

The PORT also supports synchronous and asynchronous input sensing with interrupts for selectable pin change conditions. Asynchronous pin-change sensing means that a pin change can wake the device from all sleep modes, including the modes where no clocks are running.

All pin functions are configurable individually per pin. The pins have hardware read-modify-write (RMW) functionality for safe and correct change of drive value and/or pull resistor configuration. The direction of one port pin can be changed without unintentionally changing the direction of any other pin.

The PORT pin configuration also controls input and output selection of other device functions.

Related Links

5. I/O Multiplexing and Considerations
7. Peripherals and Architecture

16.2.1 Block Diagram

Figure 16-1. PORT Block Diagram

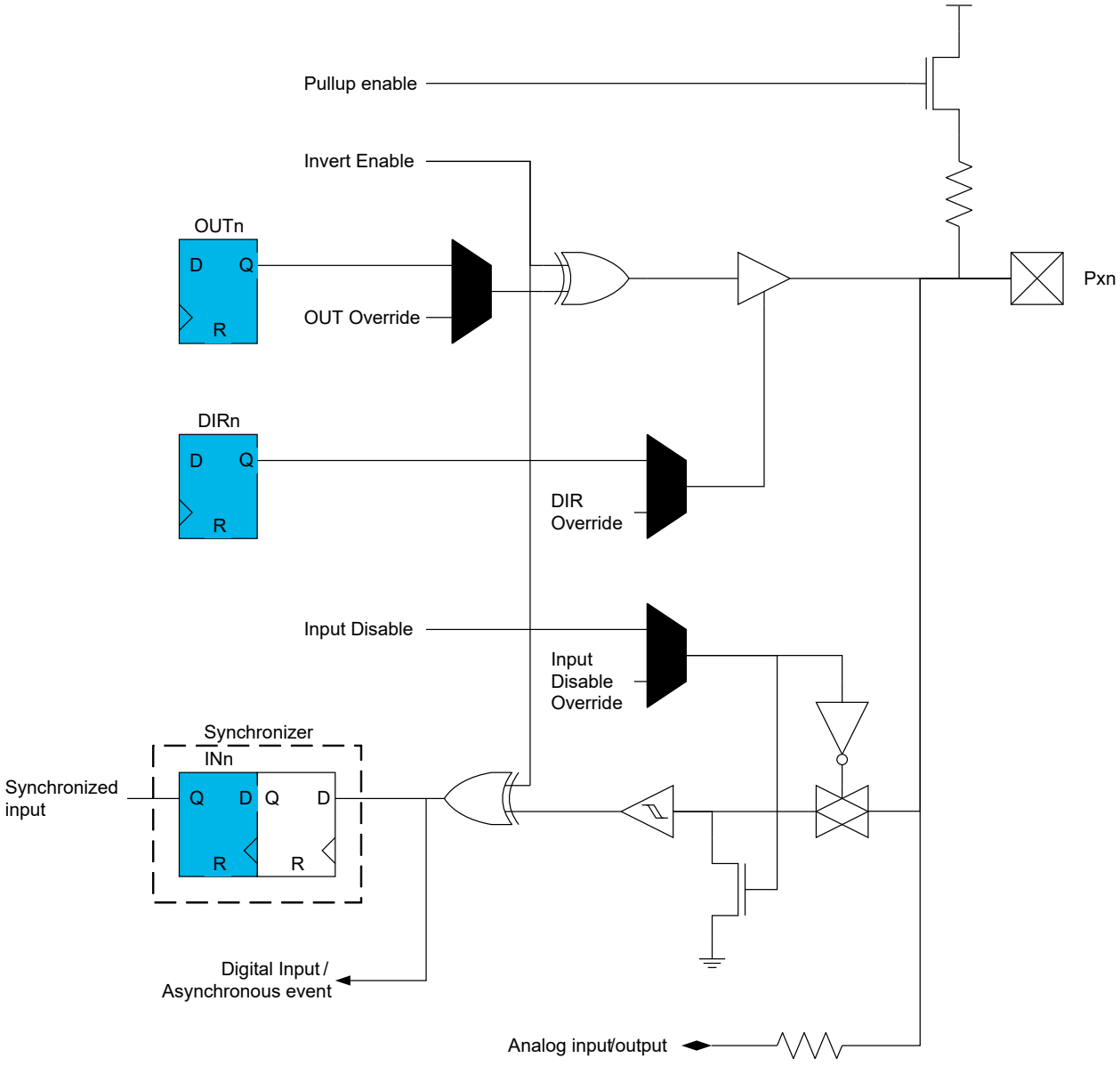

16.2.2 Signal Description

Signal	Type	Description
EXTINT	Digital input	External interrupt - available on all I/O pins

Related Links

5. I/O Multiplexing and Considerations

16.2.3 System Dependencies

In order to use this peripheral, other parts of the system must be configured correctly, as described below.

Table 16-1. PORT System Dependencies

Dependency	Applicable	Peripheral
Clocks	Yes	CLKCTRL
I/O Lines and Connections	No	-
Interrupts	Yes	CPUINT
Events	Yes	EVSYS
Debug	No	-

Related Links
16.2.3.4 Events
16.2.3.1 Clocks
16.2.3.3 Interrupts

16.2.3.1 Clocks
This peripheral depends on the peripheral clock.

16.2.3.2 I/O Lines and Connections
Not applicable.

16.2.3.3 Interrupts
Using the interrupts of this peripheral requires the Interrupt Controller to be configured first.

Related Links
13. CPUINT - CPU Interrupt Controller
16.3.3 Interrupts
8.7.3 SREG

16.2.3.4 Events
The events of this peripheral are connected to the Event System.

Related Links
14. EVSYS - Event System

16.2.3.5 Debug Operation
This peripheral is unaffected by entering debug mode.

16.3 Functional Description

16.3.1 Initialization
After Reset, all standard function device I/O pads are connected to the PORT with outputs tri-stated and input buffers enabled, even if there is no clock running.

For best power consumption, disable the input of unused pins and pins that are used as analog inputs or outputs.

Specific pins, such as those used for connecting a debugger, may be configured differently, as required by their special function.

16.3.2 Operation

16.3.2.1 Basic Functions
Each I/O pin Pxn can be controlled by the registers in PORT x. Each pin group x has its own set of PORT registers, the base address of the register set for pin n is at the byte address $\mathrm{PORT} + 0\mathrm{x}10 + n$. The index within that register set is n.

To use pin number n as an output only, write bit n of the PORT.DIR register to '1'. This can also be done by writing bit n in the PORT.DIRSET register to '1' - this will avoid disturbing the configuration of other pins in that group. The nth bit in the PORT.OUT register must be written to the desired output value.

Similarly, writing a PORT.OUTSET bit to '1' will set the corresponding bit in the PORT.OUT register to '1'. Writing a bit in PORT.OUTCLR to '1' will clear that bit in PORT.OUT to zero. Writing a bit in PORT.OUTTGL or PORT.IN to '1' will toggle that bit in PORT.OUT.

To use pin n as an input, bit n in the PORT.DIR register must be written to '0' to disable the output driver. This can also be done by writing bit n in the PORT.DIRCLR register to '1' - this will avoid disturbing the configuration of other pins in that group. The input value can be read from bit n in register PORT.IN as long as the ISC bit is not set to INPUT_DISABLE.

Writing a bit to '1' in PORT.DIRTGL will toggle that bit in PORT.DIR, and toggle the direction of the corresponding pin.

16.3.2.2 Virtual Ports

The Virtual Port registers map the most frequently used regular Port registers into the bit-accessible I/O space. Writing to the Virtual Port registers has the same effect as writing to the regular registers, but allows for memory-specific instructions, such as bit-manipulation instructions, which are not valid for the extended I/O memory space where the regular Port registers reside.

Table 16-2. Virtual Port Mapping

Regular Port Register	Mapped to Virtual Port Register
PORT.DIR	VPORT.DIR
PORT.OUT	VPORT.OUT
PORT.IN	VPORT.IN
PORT.INTFLAG	VPORT.INTFLAG

Related Links

16.6 Register Summary - VPORT
5. I/O Multiplexing and Considerations
7. Peripherals and Architecture

16.3.2.3 Pin Configuration

The Pin n Configuration register (PORT.PINnCTRL) is used to configure inverted I/O, pullup, and input sensing of a pin.

All input and output on the respective pin n can be inverted by writing a '1' to the Inverted I/O Enable bit (INVEN) in PORT.PINnCTRL.

Toggling the INVEN bit causes an edge on the pin, which can be detected by all peripherals using this pin, and is seen by interrupts or Events if enabled.

Pullup of pin n is enabled by writing a '1' to the Pullup Enable bit (PULLUPEN) in PORT.PINnCTRL.

Changes of the signal on a pin can trigger an interrupt. The exact conditions are defined by writing to the Input/Sense bit field (ISC) in PORT.PINnCTRL.

When setting or changing interrupt settings, take these points into account:

- If an INVEN bit is toggled in the same cycle as the interrupt setting, the edge caused by the inversion toggling may not cause an interrupt request.
- If an input is disabled while synchronizing an interrupt, that interrupt may be requested on re-enabling the input, even if it is re-enabled with a different interrupt setting.
- If the interrupt setting is changed while synchronizing an interrupt, that interrupt may not be accepted.
- Only few pins support full asynchronous interrupt detection, see I/O Multiplexing and Considerations. These limitations apply for waking the system from sleep:

Interrupt Type	Fully Asynchronous Pins	Other Pins
BOTHEDGES	will wake system	will wake system
RISING	will wake system	will not wake system
FALLING	will wake system	will not wake system
LEVEL	will wake system	will wake system

Related Links

5. I/O Multiplexing and Considerations

16.3.3 Interrupts

Table 16-3. Available Interrupt Vectors and Sources

Offset	Name	Vector Description	Conditions
0x00	PORTx	PORT A, B, C interrupt	INTn in PORT.INTFLAGS is raised as configured by ISC bit in PORT.PINnCTRL.

Each PORT pin n can be configured as an interrupt source. Each interrupt can be individually enabled or disabled by writing to ISC in PORT.PINCTRL.

When an interrupt condition occurs, the corresponding Interrupt Flag is set in the Interrupt Flags register of the peripheral (*peripheral*.INTFLAGS).

An interrupt request is generated when the corresponding interrupt is enabled and the Interrupt Flag is set. The interrupt request remains active until the Interrupt Flag is cleared. See the peripheral's INTFLAGS register for details on how to clear Interrupt Flags.

Asynchronous Sensing Pin Properties

Table 16-4. Behavior Comparison of Fully/Partly Asynchronous Sense Pin

Property	Synchronous or Partly Asynchronous Sense Support	Full Asynchronous Sense Support
Minimum pulse width to trigger interrupt	Minimum one system clock cycle	Less than a system clock cycle
Waking the device from sleep	From all interrupt sense configurations from sleep modes with Main Clock running. Only from BOTHEDGES or LEVEL interrupt sense configuration from sleep modes with Main Clock stopped.	From all interrupt sense configurations from all sleep modes
Interrupt "dead time"	No new interrupt for three cycles after the previous	No limitation
Minimum Wakeup pulse length	Value on pad must be kept until the system clock has restarted	No limitation

Related Links

8. AVR CPU
8.7.3 SREG

16.3.4 Sleep Mode Operation

With the exception of interrupts and input synchronization, all pin configurations are independent of sleep mode. Peripherals connected to the Ports can be affected by sleep modes, described in the respective peripherals' documentation.

The PORT peripheral will always use the Main Clock. Input synchronization will halt when this clock stops.

16.3.5 Synchronization

Not applicable.

16.3.6 Configuration Change Protection

Not applicable.

16.4 Register Summary - PORT

Offset	Name	Bit Pos.								
0x00	DIR	7:0	DIR[7:0]							
0x01	DIRSET	7:0	DIRSET[7:0]							
0x02	DIRCLR	7:0	DIRCLR[7:0]							
0x03	DIRTGL	7:0	DIRTGL[7:0]							
0x04	OUT	7:0	OUT[7:0]							
0x05	OUTSET	7:0	OUTSET[7:0]							
0x06	OUTCLR	7:0	OUTCLR[7:0]							
0x07	OUTTGL	7:0	OUTTGL[7:0]							
0x08	IN	7:0	IN[7:0]							
0x09	INTFLAGS	7:0	INT[7:0]							
0x0A ... 0x0F	Reserved									
0x10	PIN0CTRL	7:0	INVEN				PULLUPEN	ISC[2:0]		
0x11	PIN1CTRL	7:0	INVEN				PULLUPEN	ISC[2:0]		
0x12	PIN2CTRL	7:0	INVEN				PULLUPEN	ISC[2:0]		
0x13	PIN3CTRL	7:0	INVEN				PULLUPEN	ISC[2:0]		
0x14	PIN4CTRL	7:0	INVEN				PULLUPEN	ISC[2:0]		
0x15	PIN5CTRL	7:0	INVEN				PULLUPEN	ISC[2:0]		
0x16	PIN6CTRL	7:0	INVEN				PULLUPEN	ISC[2:0]		
0x17	PIN7CTRL	7:0	INVEN				PULLUPEN	ISC[2:0]		

16.5 Register Description - Ports

16.5.1 Data Direction

Name: DIR
Offset: 0x00
Reset: 0x00
Property: -

Bit	7	6	5	4	3	2	1	0
	DIR[7:0]							
Access	R/W	R/W	R/W	R/W	R/W	R/W	R/W	R/W
Reset	0	0	0	0	0	0	0	0

Bits 7:0 – DIR[7:0] Data Direction
This bit field selects the data direction for the individual pins n of the Port.
Writing a '1' to PORT.DIR[n] configures and enables pin n as output pin.
Writing a '0' to PORT.DIR[n] configures pin n as input pin. It can be configured by writing to the ISC bit in PORT.PINnCTRL.

16.5.2 Data Direction Set

Name: DIRSET
Offset: 0x01
Reset: 0x00
Property: -

Bit	7	6	5	4	3	2	1	0
	DIRSET[7:0]							
Access	R/W	R/W	R/W	R/W	R/W	R/W	R/W	R/W
Reset	0	0	0	0	0	0	0	0

Bits 7:0 – DIRSET[7:0] Data Direction Set
This bit field can be used instead of a read-modify-write to set individual pins as output.
Writing a '1' to DIRSET[n] will set the corresponding PORT.DIR[n] bit.
Reading this bit field will always return the value of PORT.DIR.

16.5.3 Data Direction Clear

Name: DIRCLR
Offset: 0x02
Reset: 0x00
Property: -

Bit	7	6	5	4	3	2	1	0
	DIRCLR[7:0]							
Access	R/W	R/W	R/W	R/W	R/W	R/W	R/W	R/W
Reset	0	0	0	0	0	0	0	0

Bits 7:0 – DIRCLR[7:0] Data Direction Clear
This register can be used instead of a read-modify-write to configure individual pins as input.
Writing a '1' to DIRCLR[n] will clear the corresponding bit in PORT.DIR.
Reading this bit field will always return the value of PORT.DIR.

16.5.4 Data Direction Toggle

Name: DIRTGL
Offset: 0x03
Reset: 0x00
Property: -

Bit	7	6	5	4	3	2	1	0
	DIRTGL[7:0]							
Access	R/W	R/W	R/W	R/W	R/W	R/W	R/W	R/W
Reset	0	0	0	0	0	0	0	0

Bits 7:0 – DIRTGL[7:0] Data Direction Toggle
This bit field can be used instead of a read-modify-write to toggle the direction of individual pins.
Writing a '1' to DIRTGL[n] will toggle the corresponding bit in PORT.DIR.
Reading this bit field will always return the value of PORT.DIR.

16.5.5 Output Value

Name: OUT
Offset: 0x04
Reset: 0x00
Property: -

Bit	7	6	5	4	3	2	1	0
	OUT[7:0]							
Access	R/W	R/W	R/W	R/W	R/W	R/W	R/W	R/W
Reset	0	0	0	0	0	0	0	0

Bits 7:0 – OUT[7:0] Output Value
This bit field defines the data output value for the individual pins n of the port.
If OUT[n] is written to '1', pin n is driven high.
If OUT[n] is written to '0', pin n is driven low.
In order to have any effect, the pin direction must be configured as output.

16.5.6 Output Value Set

Name: OUTSET
Offset: 0x05
Reset: 0x00
Property: -

Bit	7	6	5	4	3	2	1	0
	OUTSET[7:0]							
Access	R/W	R/W	R/W	R/W	R/W	R/W	R/W	R/W
Reset	0	0	0	0	0	0	0	0

Bits 7:0 – OUTSET[7:0] Output Value Set
This bit field can be used instead of a read-modify-write to set the output value of individual pins to '1'.
Writing a '1' to OUTSET[n] will set the corresponding bit in PORT.OUT.
Reading this bit field will always return the value of PORT.OUT.

16.5.7 Output Value Clear

Name: OUTCLR
Offset: 0x06
Reset: 0x00
Property: -

Bit	7	6	5	4	3	2	1	0
	OUTCLR[7:0]							
Access	R/W	R/W	R/W	R/W	R/W	R/W	R/W	R/W
Reset	0	0	0	0	0	0	0	0

Bits 7:0 – OUTCLR[7:0] Output Value Clear
This register can be used instead of a read-modify-write to clear the output value of individual pins to '0'.
Writing a '1' to OUTCLR[n] will clear the corresponding bit in PORT.OUT.
Reading this bit field will always return the value of PORT.OUT.

16.5.8 Output Value Toggle

Name: OUTTGL
Offset: 0x07
Reset: 0x00
Property: -

Bit	7	6	5	4	3	2	1	0
	OUTTGL[7:0]							
Access	R/W	R/W	R/W	R/W	R/W	R/W	R/W	R/W
Reset	0	0	0	0	0	0	0	0

Bits 7:0 – OUTTGL[7:0] Output Value Toggle
This register can be used instead of a read-modify-write to toggle the output value of individual pins.
Writing a '1' to OUTTGL[n] will toggle the corresponding bit in PORT.OUT.
Reading this bit field will always return the value of PORT.OUT.

16.5.9 Input Value

Name: IN
Offset: 0x08
Reset: 0x00
Property: -

Bit	7	6	5	4	3	2	1	0
	IN[7:0]							
Access	R/W	R/W	R/W	R/W	R/W	R/W	R/W	R/W
Reset	0	0	0	0	0	0	0	0

Bits 7:0 – IN[7:0] Input Value
This register shows the value present on the pins if the digital input driver is enabled. IN[n] shows the value of pin n of the Port. The input is not sampled and cannot be read if the digital input buffers are disabled.
Writing to a bit of PORT.IN will toggle the corresponding bit in PORT.OUT.

16.5.10 Interrupt Flags

Name: INTFLAGS
Offset: 0x09
Reset: 0x00
Property: -

Bit	7	6	5	4	3	2	1	0
	INT[7:0]							
Access	R/W	R/W	R/W	R/W	R/W	R/W	R/W	R/W
Reset	0	0	0	0	0	0	0	0

Bits 7:0 – INT[7:0] Interrupt Pin Flag
The INT Flag is set when a pin change/state matches the pin's input sense configuration.
Writing a '1' to a flag's bit location will clear the flag.
For enabling and executing the interrupt, refer to ISC bit description in PORT.PINnCTRL.

16.5.11 Pin n Control

Name: PINCTRL
Offset: 0x10 + n*0x01 [n=0..7]
Reset: 0x00
Property: -

Bit	7	6	5	4	3	2	1	0
	INVEN				PULLUPEN	ISC[2:0]		
Access	R/W				R/W	R/W	R/W	R/W
Reset	0				0	0	0	0

Bit 7 – INVEN Inverted I/O Enable

Value	Description
0	I/O on pin n not inverted
1	I/O on pin n inverted

Bit 3 – PULLUPEN Pullup Enable

Value	Description
0	Pullup disabled for pin n
1	Pullup enabled for pin n

Bits 2:0 – ISC[2:0] Input/Sense Configuration
These bits configure the input and sense configuration of pin n. The sense configuration determines how a port interrupt can be triggered. If the input buffer is disabled, the input cannot be read in the IN register.

Value	Name	Description
0x0	INTDISABLE	Interrupt disabled but input buffer enabled
0x1	BOTHEDGES	Sense both edges
0x2	RISING	Sense rising edge
0x3	FALLING	Sense falling edge
0x4	INPUT_DISABLE	Digital input buffer disabled
0x5	LEVEL	Sense low level
other	-	Reserved

16.6 Register Summary - VPORT

Offset	Name	Bit Pos.								
0x00	DIR	7:0	DIR[7:0]							
0x01	OUT	7:0	OUT[7:0]							
0x02	IN	7:0	IN[7:0]							
0x03	INTFLAGS	7:0	INT[7:0]							

16.7 Register Description - Virtual Ports

16.7.1 Data Direction

Name: DIR
Offset: 0x00
Reset: 0x00
Property: -

Writing to the Virtual Port registers has the same effect as writing to the regular registers, but allows for memory-specific instructions, such as bit-manipulation instructions, which are not valid for the extended I/O memory space where the regular Port registers reside.

Bit	7	6	5	4	3	2	1	0
	DIR[7:0]							
Access	R/W	R/W	R/W	R/W	R/W	R/W	R/W	R/W
Reset	0	0	0	0	0	0	0	0

Bits 7:0 – DIR[7:0] Data Direction
This bit field selects the data direction for the individual pins in the Port.

16.7.2 Output Value

Name: OUT
Offset: 0x01
Reset: 0x00
Property: -

Writing to the Virtual Port registers has the same effect as writing to the regular registers, but allows for memory-specific instructions, such as bit-manipulation instructions, which are not valid for the extended I/O memory space where the regular Port registers reside.

Bit	7	6	5	4	3	2	1	0
	OUT[7:0]							
Access	R/W	R/W	R/W	R/W	R/W	R/W	R/W	R/W
Reset	0	0	0	0	0	0	0	0

Bits 7:0 – OUT[7:0] Output Value
This bit field selects the data output value for the individual pins in the Port.

16.7.3 Input Value

Name: IN
Offset: 0x02
Reset: 0x00
Property: -

Writing to the Virtual Port registers has the same effect as writing to the regular registers, but allows for memory-specific instructions, such as bit-manipulation instructions, which are not valid for the extended I/O memory space where the regular Port registers reside.

Bit	7	6	5	4	3	2	1	0
	IN[7:0]							
Access	R/W	R/W	R/W	R/W	R/W	R/W	R/W	R/W
Reset	0	0	0	0	0	0	0	0

Bits 7:0 – IN[7:0] Input Value
This bit field holds the value present on the pins if the digital input buffer is enabled.
Writing to a bit of VPORT.IN will toggle the corresponding bit in VPORT.OUT.

16.7.4 Interrupt Flag

Name: INTFLAGS
Offset: 0x03
Reset: 0x00
Property: -

Writing to the Virtual Port registers has the same effect as writing to the regular registers, but allows for memory-specific instructions, such as bit-manipulation instructions, which are not valid for the extended I/O memory space where the regular Port registers reside.w

Bit	7	6	5	4	3	2	1	0
	INT[7:0]							
Access	R	R	R	R	R	R	R	R
Reset	0	0	0	0	0	0	0	0

Bits 7:0 – INT[7:0] Interrupt Pin Flag
The INT flag is set when a pin change/state matches the pin's input sense configuration, and the pin is configured as source for port interrupt.
Writing a '1' to this flag's bit location will clear the flag.
For enabling and executing the interrupt, refer to PORT_PINnCTRL.ISC.

17. BOD - Brownout Detector

17.1 Features

- Brownout detection - monitors the power supply to avoid operation below a programmable level
- Three modes:
  - Enabled
  - Sampled
  - Disabled
- Separate selection of mode for Active mode and sleep modes
- Voltage level monitor (VLM) with interrupt
- Programmable VLM level relative to the BOD level

17.2 Overview

The Brownout Detector (BOD) monitors the power supply and compares the voltage with two programmable brownout threshold levels: the brownout threshold level defines when to generate a Reset. A voltage level monitor (VLM) monitors the power supply and compares it to a threshold higher than the BOD threshold. The VLM can then generate an interrupt request as an "early warning" when the supply voltage is about to drop below the VLM threshold. The VLM threshold level is expressed in percentage above the BOD threshold level.

The BOD is mainly controlled by fuses. The mode used in Standby sleep mode and Power Down sleep mode can be altered in normal program execution. The VLM part of the BOD is controlled by I/O registers as well.

When activated, The BOD can operate in Enabled mode, where the BOD is continuously active, and in Sampled mode, where the BOD is activated briefly at a given period to check the supply voltage level.

17.2.1 Block Diagram

Figure 17-1. BOD Block Diagram

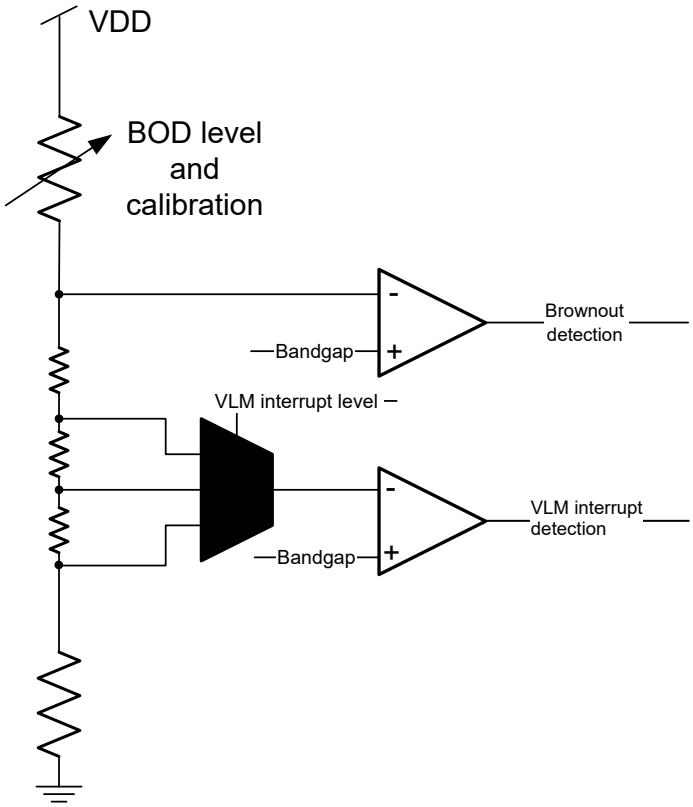

17.2.2 System Dependencies

In order to use this peripheral, other parts of the system must be configured correctly, as described below.

Table 17-1. BOD System Dependencies

Dependency	Applicable	Peripheral
Clocks	Yes	CLKCTRL
I/O Lines and Connections	No	-
Interrupts	Yes	CPUINT
Events	Yes	EVSYS
Debug	Yes	UPDI

Related Links

17.2.2.1 Clocks
17.2.2.5 Debug Operation
17.2.2.3 Interrupts
17.2.2.4 Events

17.2.2.1 Clocks

The BOD uses the 32KHz oscillator (OSCULP32K) as clock source for CLK_BOD.

17.2.2.2 I/O Lines and Connections

Not applicable.

17.2.2.3 Interrupts

Using the interrupts of this peripheral requires the Interrupt Controller to be configured first.

Related Links

13. CPUINT - CPU Interrupt Controller
8.7.3 SREG
17.3.2 Interrupts

17.2.2.4 Events

Not applicable.

17.2.2.5 Debug Operation

This peripheral is unaffected by entering debug mode.

The VLM interrupt will not be executed if the CPU is halted in debug mode.

If the peripheral is configured to require periodical service by the CPU through interrupts or similar, improper operation or data loss may result during halted debugging.

17.3 Functional Description

17.3.1 Initialization

The BOD settings are loaded from fuses during reset. The BOD level and operating mode in Active and Idle sleep mode are set by fuses and cannot be changed by the CPU. The operating mode in Standby and Power Down sleep mode is loaded from fuses and can be changed by software.

The Voltage Level Monitor function can be enabled by writing a '1' to the VLM Interrupt Enable bit (VLMIE) in the Interrupt Control register (BOD.INTCTRL). The VLM interrupt is configured by writing the VLM Configuration bits (VLMCFG) in BOD.INTCTRL. An interrupt is requested when the supply voltage crosses the VLM threshold either from above, from below, or from any direction.

The VLM functionality will follow the BOD mode. If the BOD is turned off, the VLM will not be enabled, even if the VLMIE is '1'. If the BOD is using sampled mode, the VLM will also be sampled. When enabling VLM interrupt, the interrupt flag will always be set if VLMCFG equals 0x2 and may be set if VLMCFG is configured to 0x0 or 0x1.

The VLM threshold is defined by writing the VLM Level bits (VLMLVL) in the Control A register (BOD.VLMCTRLA).

If the BOD/VLM is enabled in sampled mode, only VLMCFG=0x1 (crossing threshold from above) in BOD.INTCTRL will trigger an interrupt.

17.3.2 Interrupts

Table 17-2. Available Interrupt Vectors and Sources

Offset	Name	Vector Description	Conditions
0x00	VLM	Voltage Level Monitor	Supply voltage crossing the VLM threshold as configured by VLMCFG in BOD.INTCTRL

When an interrupt condition occurs, the corresponding Interrupt Flag is set in the Interrupt Flags register of the peripheral (*peripheral*.INTFLAGS).

An interrupt source is enabled or disabled by writing to the corresponding enable bit in the peripheral's Interrupt Control register (*peripheral*.INTCTRL).

An interrupt request is generated when the corresponding interrupt source is enabled and the Interrupt Flag is set. The interrupt request remains active until the Interrupt Flag is cleared. See the peripheral's INTFLAGS register for details on how to clear Interrupt Flags.

Related Links

8. AVR CPU
8.7.3 SREG

17.3.3 Sleep Mode Operation

There are two separate fuses defining the BOD configuration in different sleep modes: One fuse defines the mode used in Active mode and Idle sleep mode (ACTIVE in FUSE.BODCFG), and is written to the ACTIVE bits in the Control A register (BOD.CTRLA). The second fuse (SLEEP in FUSE.BODCFG) selects the mode used in Standby sleep mode and Power Down sleep mode, and is loaded into the SLEEP bits in the Control A register (BOD.CTRLA).

The operating mode in Active mode and Idle sleep mode (i.e. ACTIVE in BOD.CTRLA) cannot be altered by software. The operating mode in Standby sleep mode and Power Down sleep mode can be altered by writing to the SLEEP bits in the Control A register (BOD.CTRLA).

When the device is going into Standby sleep mode or Power Down sleep mode, the BOD will change operation mode as defined by SLEEP in BOD.CTRLA. When the device is waking up from Standby or Power Down sleep mode, the BOD will operate in the mode defined by the ACTIVE bit field in BOD.CTRLA.

17.3.4 Synchronization

Not applicable.

17.3.5 Configuration Change Protection

This peripheral has registers that are under Configuration Change Protection (CCP). In order to write to these, a certain key must be written to the CPU.CCP register first, followed by a write access to the protected bits within four CPU instructions.

It is possible to try writing to these registers any time, but the values are not altered.

The following registers are under CCP:

Table 17-3. Registers under Configuration Change Protection

Register	Key
SLEEP in BOD.CTRLA	IOREG

Related Links

8.5.7.1 Sequence for Write Operation to Configuration Change Protected I/O Registers

17.4 Register Summary - BOD

Offset	Name	Bit Pos.								
0x00	CTRLA	7:0				SAMPFREQ	ACTIVE[1:0]		SLEEP[1:0]	
0x01	CTRLB	7:0						LVL[2:0]		
0x02 ... 0x07	Reserved									
0x08	VLMCTRLA	7:0							VLMLVL[1:0]	
0x09	INTCTRL	7:0						VLMCFG[1:0]		VLMIE
0x0A	INTFLAGS	7:0								VLMIF
0x0B	STATUS	7:0								VLMS

17.5 Register Description

17.5.1 Control A

Name: CTRLA
Offset: 0x00
Reset: Loaded from fuse
Property: Configuration Change Protection

Bit	7	6	5	4	3	2	1	0
				SAMPFREQ	ACTIVE[1:0]		SLEEP[1:0]	
Access	R	R	R	R	R	R	R/W	R/W
Reset	0	0	0	x	x	x	x	x

Bit 4 – SAMPFREQ Sample Frequency
This bit selects the BOD sample frequency.
The Reset value is loaded from the SAMPFREQ bit in FUSE.BODCFG.This bit is under Configuration Change Protection (CCP).

Value	Description
0x0	Sample frequency is 1kHz
0x1	Sample frequency is 125Hz

Bits 3:2 – ACTIVE[1:0] Active
These bits selects the BOD operation mode when the device is in active or idle mode.
The Reset value is loaded from the ACTIVE bits in FUSE.BODCFG.These bits are not under Configuration Change Protection (CCP).

Value	Description
0x0	Disabled
0x1	Enabled
0x2	Sampled
0x3	Enabled with wake-up halted until BOD is ready

Bits 1:0 – SLEEP[1:0] Sleep
These bits select the BOD operation mode when the device is in standby or power-down sleep mode.
These bits are under Configuration Change Protection (CCP).
The Reset value is loaded from the SLEEP bits in FUSE.BODCFG.

Value	Description
0x0	Disabled
0x1	Enabled
0x2	Sampled
0x3	Reserved

17.5.2 Control B

Name: CTRLB
Offset: 0x01
Reset: Loaded from fuse
Property: -

Bit	7	6	5	4	3	2	1	0
						LVL[2:0]		
Access	R	R	R	R	R	R	R	R
Reset	0	0	0	0	0	x	x	x

Bits 2:0 – LVL[2:0] BOD Level
These bits select the BOD threshold level.
The Reset value is loaded from the BOD Level bits (LVL) in the BOD Configuration Fuse (FUSE.BODCFG).

Value	Name	Description
0x0	BODLEVEL0	1.8V
0x2	BODLEVEL2	2.6V
0x7	BODLEVEL7	4.2V

Note:

- Values in the description are typical values.
- Refer to the *BOD and POR Characteristics* in *Electrical Characteristics* for maximum and minimum values.

17.5.3 VLM Control A

Name: VLMCTRLA
Offset: 0x08
Reset: 0x00
Property: -

Bit	7	6	5	4	3	2	1	0
							VLMLVL[1:0]	
Access	R	R	R	R	R	R	R/W	R/W
Reset	0	0	0	0	0	0	0	0

Bits 1:0 – VLMLVL[1:0] VLM Level
These bit select the Voltage Level Monitor threshold relative to the BOD threshold (LVL in BOD.CTRLB).

Value	Description
0x0	VLM threshold 5% above BOD threshold
0x1	VLM threshold 15% above BOD threshold
0x2	VLM threshold 25% above BOD threshold
other	Reserved

17.5.4 Interrupt Control

Name: INTCTRL
Offset: 0x09
Reset: 0x00
Property: -

Bit	7	6	5	4	3	2	1	0
						VLMCFG[1:0]		VLMIE
Access	R	R	R	R	R	R/W	R/W	R/W
Reset	0	0	0	0	0	0	0	0

Bits 2:1 – VLMCFG[1:0] VLM Configuration
These bits select which incidents will trigger a VLM interrupt.

Value	Description
0x0	Voltage crosses VLM threshold from above
0x1	Voltage crosses VLM threshold from below
0x2	Either direction is triggering an interrupt request
Other	Reserved

Bit 0 – VLMIE VLM Interrupt Enable
Writing a '1' to this bit enables the Voltage Level Monitor (VLM) interrupt.

17.5.5 VLM Interrupt Flags

Name: INTFLAGS
Offset: 0x0A
Reset: 0x00
Property: -

Bit	7	6	5	4	3	2	1	0
								VLMIF
Access	R	R	R	R	R	R	R	R/W
Reset	0	0	0	0	0	0	0	0

Bit 0 – VLMIF VLM Interrupt Flag
This flag is set when a trigger from the VLM is given, as configured by the VLMCFG bit in the BOD.INTCTRL register. The flag is only updated when the BOD is enabled.

17.5.6 VLM Status

Name: STATUS
Offset: 0x0B
Reset: 0x00
Property: -

Bit	7	6	5	4	3	2	1	0
								VLMS
Access	R	R	R	R	R	R	R	R
Reset	0	0	0	0	0	0	0	0

Bit 0 – VLMS VLM Status
This bit is only valid when the bod is enabled.

Value	Description
0	The voltage is above the VLM threshold level
1	The voltage is below the VLM threshold level

18. VREF - Voltage Reference

18.1 Features

- programmable voltage reference sources
  - One for each ADC peripheral
  - One for each AC and DAC peripheral
- Each reference source supports five different voltages:
  - 0.55V
  - 1.1V
  - 1.5V
  - 2.5V
  - 4.3V

18.2 Overview

The Voltage Reference peripheral (VREF) provides control registers for the voltage reference sources used by several peripherals. The user can select the reference voltages for the ADC0 by writing to the ADC0 Reference Select bit field (ADC0REFSEL) in the Control A register (VREF.CTRLA), and for both AC0 and DAC0 by writing to the DAC0 and AC0 Reference Select bit field DAC0REFSEL in VREF.CTRLA.

A voltage reference source is enabled automatically when requested by a peripheral. The user can enable the reference voltage sources (and thus, override the automatic disabling of unused sources) by writing to the respective Force Enable bit (ADC0REFEN, DAC0REFEN) in the Control B register (VREF.CTRLB). This may be desirable to decrease start-up time, at the cost of increased power consumption.

18.2.1 Block Diagram

Figure 18-1. Block Diagram VREF

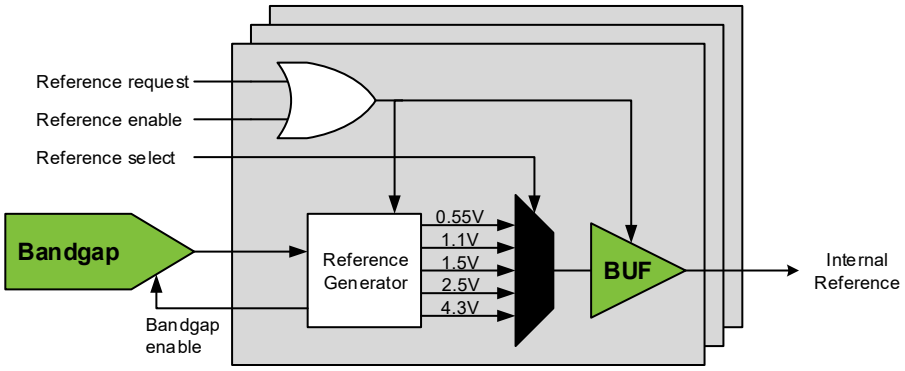

18.3 Functional Description

18.3.1 Initialization

The default configuration will enable the respective source when the ADC0, AC0 or DAC0 is requesting a reference voltage. The default reference voltages are 0.55V, but can be configured by writing to the respective Reference Select bit field (ADC0REFSEL, DAC0REFSEL) in the Control A register (VREF.CTRLA).

18.4 Register Summary - VREF

Offset	Name	Bit Pos.								
0x00	CTRLA	7:0		ADC0REFSEL[2:0]				DAC0REFSEL[2:0]		
0x01	CTRLB	7:0							ADC0REFEN	DAC0REFEN

18.5 Register Description

18.5.1 Control A

Name: CTRLA
Offset: 0x00
Reset: 0x00
Property: -

Bit	7	6	5	4	3	2	1	0
		ADC0REFSEL[2:0]				DAC0REFSEL[2:0]		
Access		R/W	R/W	R/W		R/W	R/W	R/W
Reset		0	0	0		0	0	0

Bits 6:4 – ADC0REFSEL[2:0] ADC0 Reference Select
These bits select the reference voltage for the ADC0.

Value	Description
0x0	0.55V
0x1	1.1V
0x2	2.5V
0x3	4.3V
0x4	1.5V
other	Reserved

Bits 2:0 – DAC0REFSEL[2:0] DAC0 and AC0 Reference Select
These bits select reference voltage for the DAC0 and AC0.

Value	Description
0x0	0.55V
0x1	1.1V
0x2	2.5V
0x3	4.3V
0x4	1.5V
other	Reserved

18.5.2 Control B

Name: CTRLB
Offset: 0x01
Reset: 0x00
Property: -

Bit	7	6	5	4	3	2	1	0
							ADC0REFEN	DAC0REFEN
Access							R/W	R/W
Reset							0	0

Bit 1 – ADC0REFEN ADC0 Reference Force Enable
Writing a '1' to this bit forces the voltage reference for the ADC0 to be running, even if it not requested.
Writing a '0' to this bit allows to automatic enable/disable of the reference source by the peripheral.

Bit 0 – DAC0REFEN DAC0 and AC0 Reference Force Enable
Writing a '1' to this bit forces the voltage reference for the DAC0 and AC0 to be running, even if it not requested.
Writing a '0' to this bit allows to automatic enable/disable of the reference source by the peripheral.

19. WDT - Watchdog Timer

19.1 Features

- Issues a System Reset if the Watchdog Timer is not cleared before its timeout period
- Operating asynchronously from system clock using an independent oscillator
- Using the 1KHz output of the 32KHz Ultra Low Power oscillator (OSCULP32K)
- 11 selectable timeout periods, from 8ms to 8s
- Two operation modes:
  - Normal Mode
  - Window Mode
- Configuration lock to prevent unwanted changes
- Closed period timer activation after first WDT instruction for easy setup

19.2 Overview

The Watchdog Timer (WDT) is a system function for monitoring correct program operation. It allows to recover from situations such as runaway or deadlocked code, by issuing a Reset. When enabled, the WDT is a constantly running timer configured to a predefined timeout period. If the WDT is not reset within the timeout period, it will issue a System Reset. The WDT is reset by executing the `WDR` (Watchdog Timer Reset) instruction from software.

The WDT has two modes of operation, Normal mode and Window mode. The settings in the Control A register (WDT.CTRLA) determine the mode of operation.

A window mode allows to define a time slot or "window" inside the timeout period during which the WDT must be reset. If the WDT is reset outside this window, either too early or too late, a System Reset will be issued. Compared to the normal mode, the window mode can also catch situations where a code error causes constant `WDR` execution.

When enabled, the WDT will run in active mode and all sleep modes. It is asynchronous, i.e. running from a CPU-independent clock source. For this reason it will continue to operate and be able to issue a System Reset even if the main clock fails.

The Configuration Change Protection mechanism ensures that the WDT settings cannot be changed by accident. For increased safety, a configuration for locking the WDT settings is also available.

Related Links

8.5.7 CCP - Configuration Change Protection

19.2.1 Block Diagram

Figure 19-1. WDT Block Diagram

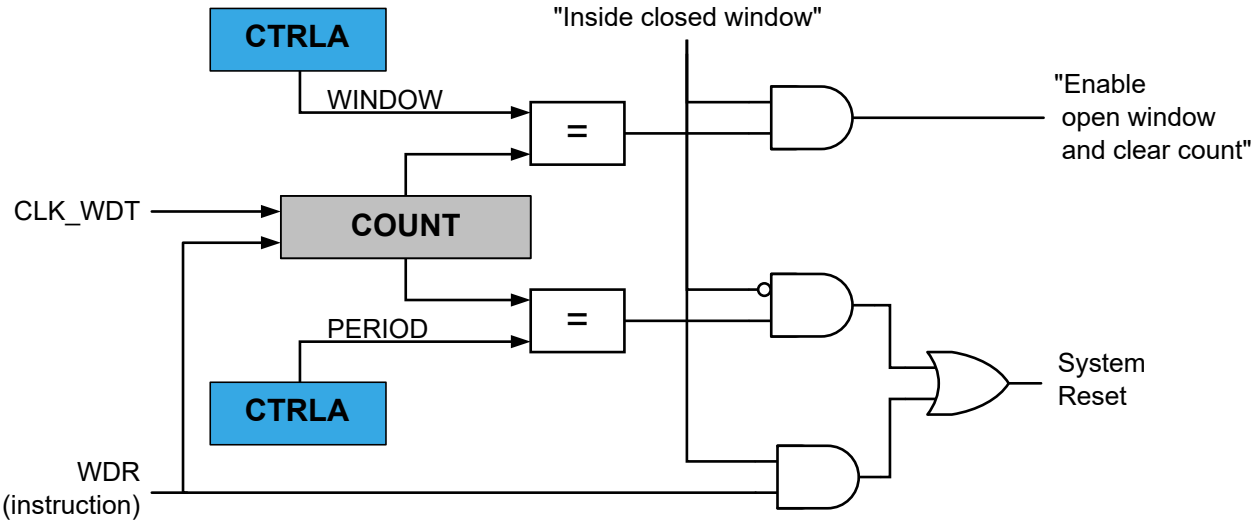

19.2.2 Signal Description

Not applicable.

19.2.3 System Dependencies

In order to use this peripheral, other parts of the system must be configured correctly, as described below.

Table 19-1. WDT System Dependencies

Dependency	Applicable	Peripheral
Clocks	Yes	CLKCTRL
I/O Lines and Connections	No	-
Interrupts	No	-
Events	No	-
Debug	Yes	UPDI

Related Links

19.2.3.1 Clocks
19.2.3.5 Debug Operation

19.2.3.1 Clocks

A 1KHz oscillator clock (CLK_WDT_OSC) is sourced from the internal ultra-low-power oscillator, OSCULP32K. Due to the ultra-low-power design, the oscillator is not very accurate, and so the exact time-out period may vary from device to device. This variation must be kept in mind when designing software that uses the WDT to ensure that the time-out periods used are valid for all devices.

The counter clock CLK_WDT_OSC is asynchronous to the system clock. Due to this asynchronicity, writing to WDT control register will require synchronization between the clock domains.

Related Links

34. Electrical Characteristics

19.2.3.2 I/O Lines and Connections

Not applicable.

19.2.3.3 Interrupts

Not applicable.

19.2.3.4 Events

Not applicable.

19.2.3.5 Debug Operation

When run-time debugging, this peripheral will continue normal operation. Halting the CPU in debugging mode will halt normal operation of the peripheral.

When halting the CPU in debug mode, the WDT counter is reset.

when starting the CPU again and the WDT was operating in window mode, the first closed window timeout period will be disabled, and a normal mode timeout period is executed.

Related Links

19.3.2.2 Window Mode

19.3 Functional Description

19.3.1 Initialization

- The WDT is enabled when a non-zero value is written to the Period bits (PERIOD) in the Control A register (WDT.CTRLA).
- Optional: Write a non-zero value to the Window bits (WINDOW) in WDT.CTRLA to enable window mode operation.

All bits in the Control A register and the Lock bit (LOCK) in the Status register (WDT.STATUS) are write protected by the Configuration Change Protection mechanism.

The Reset value of WDT.CTRLA is defined by a fuse (FUSE.WDTCFG), so the WDT can be enabled at boot time. If this is the case, the LOCK bit in WDT.STATUS is set at boot time.

Related Links

19.4 Register Summary - WDT

19.3.2 Operation

19.3.2.1 Normal Mode

In normal mode operation, a single timeout period is set for the WDT. If the WDT is not reset from software using the `WDR` any time before the timeout occurs, the WDT will issue a System Reset.

A new WDT timeout period will be started each time the WDT is reset by `WDR`.

There are 11 possible WDT timeout periods (TO_{WDT}), selectable from 8ms to 8s by writing to the Period bit field (PERIOD) in the Control A register (WDT.CTRLA).

Figure 19-2. Normal Mode Operation

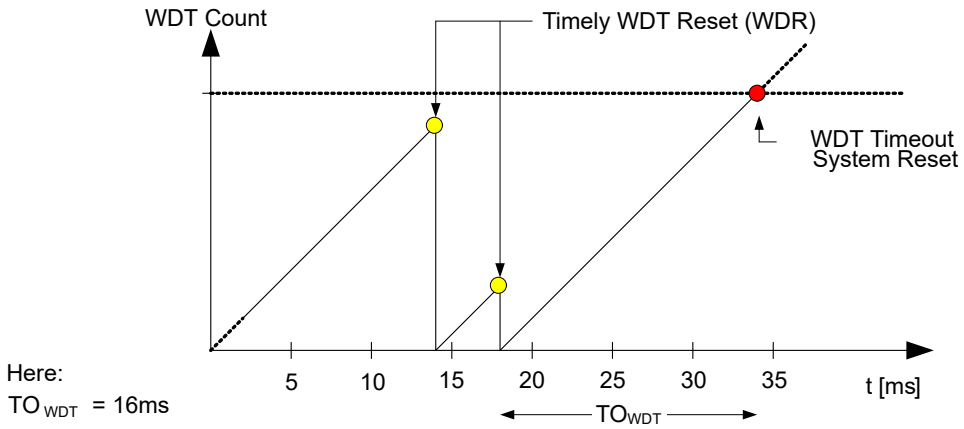

Normal mode is enabled as long as the WINDOW bit field in the Control A register (WDT.CTRLA) is 0x0.

Related Links

19.4 Register Summary - WDT

19.3.2.2 Window Mode

In window mode operation, the WDT uses two different timeout periods, a "closed" window timeout period (TOWDTW) and the normal timeout period (TOWDT):

The closed window timeout period defines a duration from 8ms to 8s where the WDT cannot be reset. If the WDT is reset during this period, the WDT will issue a System Reset.

The normal WDT timeout period, which is also 8ms to 8s, defines the duration of the "open" period during which the WDT can (and should) be reset. The open period will always follow the closed period, so the total duration of the timeout period is the sum of the closed window and the open window timeout periods.

When enabling window mode or when going out of debug mode, the first closed period is activated after the first `WDR` instruction.

If a second `WDR` is issued while a previous `WDR` is being synchronized, the second one will be ignored.

Figure 19-3. Window Mode Operation

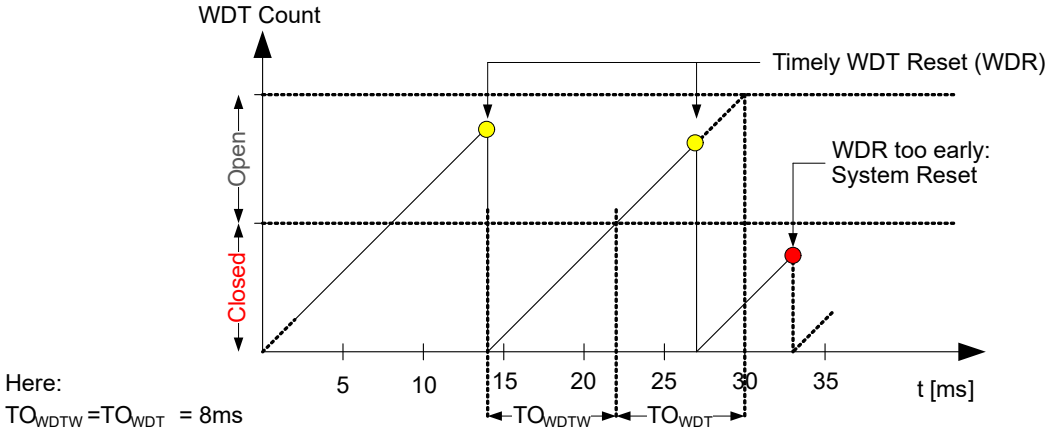

The window mode is enabled by writing a non-zero value to the WINDOW bit field in the Control A register (WDT.CTRLA), and disabled by writing WINDOW=0x0.

19.3.2.3 Configuration Protection and Lock

The WDT provides two security mechanisms to avoid unintentional changes to the WDT settings:

The first mechanism is the Configuration Change Protection mechanism, employing a timed write procedure for changing the WDT control registers.

The second mechanism locks the configuration by writing a '1' to the LOCK bit in the Status register (WDT.STATUS). When this bit is '1', the Control A register (WDT.CTRLA) cannot be changed. Consequently, the WDT cannot be disabled from software.

LOCK in WDT.STATUS can only be written to '1'. It can only be cleared in debug mode.

If the WDT configuration is loaded from fuses, LOCK is automatically set in WDT.STATUS.

Related Links

8.5.7 CCP - Configuration Change Protection

19.3.3 Events

Not applicable.

19.3.4 Interrupts

Not applicable.

19.3.5 Sleep Mode Operation

The WDT will continue to operate in any sleep mode where the source clock is active.

19.3.6 Synchronization

Due to asynchronicity between the main clock domain and the peripheral clock domain, the Control A register (WDT.CTRLA) is synchronized when written. The Synchronization Busy flag (SYNCBUSY) in the Status register (WDT.STATUS) indicates if there is an ongoing synchronization.

Writing to WDT.CTRLA while SYNCBUSY=1 is not allowed.

The following registers are synchronized when written:

- PERIOD bits in Control A register (WDT.CTRLA)
- Window Period bits (WINDOW) in WDT.CTRLA.

The WDR instruction will need 2 to 3 cycles of the WDT clock in order to be synchronized. Issuing a new WDR instruction while a WDR instruction is being synchronized will be ignored

19.3.7 Configuration Change Protection

This peripheral has registers that are under Configuration Change Protection (CCP). In order to write to these, a certain key must be written to the CPU.CCP register first, followed by a write access to the protected bits within four CPU instructions.

It is possible to try writing to these registers any time, but the values are not altered.

The following registers are under CCP:

Table 19-2. WDT - Registers under Configuration Change Protection

Register	Key
WDT.CTRLA	IOREG
LOCK bit in WDT.STATUS	IOREG

List of bits/registers protected by CCP.

- Period bits in Control A register (CTRLA.PERIOD)
- Window Period bits in Control A register (CTRLA.WINDOW)
- Lock bit in Status register (STATUS.LOCK)

Related Links

8.5.7 CCP - Configuration Change Protection
8.5.7.1 Sequence for Write Operation to Configuration Change Protected I/O Registers
8.7.1 CCP

19.4 Register Summary - WDT

Offset	Name	Bit Pos.								
0x00	CTRLA	7:0	WINDOW[3:0]				PERIOD[3:0]			
0x01	STATUS	7:0	LOCK							SYNCBUSY

19.5 Register Description

19.5.1 Control A

Name: CTRLA
Offset: 0x00
Reset: From FUSE.WDTCFG
Property: Configuration Change Protection

Bit	7	6	5	4	3	2	1	0
	WINDOW[3:0]				PERIOD[3:0]			
Access	R/W	R/W	R/W	R/W	R/W	R/W	R/W	R/W
Reset	x	x	x	x	x	x	x	x

Bits 7:4 – WINDOW[3:0] Window
Writing a non-zero value to these bits enables the window mode, and selects the according duration of the closed period.
The bits are optionally lock protected:

- If LOCK bit in WDT.STATUS is '1', all bits are change protected (Access = R)
- If LOCK bit in WDT.STATUS is '0', all bits can be changed (Access = R/W)

Value	Name	Description
0x0	OFF	-
0x1	8CLK	0.008s
0x2	16CLK	0.016s
0x3	32CLK	0.032s
0x4	64CLK	0.064s
0x5	128CLK	0.128s
0x6	256CLK	0.256s
0x7	512CLK	0.512s
0x8	1KCLK	1.024s
0x9	2KCLK	2.048s
0xA	4KCLK	4.096s
0xB	8KCLK	8.192s
other	-	Reserved

Bits 3:0 – PERIOD[3:0] Period
Writing a non-zero value to this bit enables the WDT, and selects the according timeout period in normal mode. In window mode, these bits select the duration of the open window.
The bits are optionally lock protected:

- If LOCK in WDT.STATUS is '1', all bits are change protected (Access = R)
- If LOCK in WDT.STATUS is '0', all bits can be changed (Access = R/W)

Value	Name	Description
0x0	OFF	-
0x1	8CLK	0.008s
0x2	16CLK	0.016s
0x3	32CLK	0.032s
0x4	64CLK	0.064s
0x5	128CLK	0.128s
0x6	256CLK	0.256s
0x7	512CLK	0.512s
0x8	1KCLK	1.0s
0x9	2KCLK	2.0s
0xA	4KCLK	4.1s
0xB	8KCLK	8.2s
other	-	Reserved

19.5.2 Status

Name: STATUS
Offset: 0x01
Reset: 0x00
Property: Configuration Change Protection

Bit	7	6	5	4	3	2	1	0
	LOCK							SYNCBUSY
Access	R/W							R
Reset	0							0

Bit 7 – LOCK Lock
Writing this bit to '1' write protects the WDT.CTRLA register.
It is only possible to write this bit to '1'. This bit can only be cleared in debug.
If the PERIOD bits in WDT.CTRLA are different from zero after boot code, Lock will automatically be set.
This bit is under Configuration Change Protection (CCP).

Bit 0 – SYNCBUSY Synchronization Busy
This bit is set after writing to the WDT.CTRLA register while the data is being synchronized from the system clock domain to the WDT clock domain.
This bit is cleared by system after the synchronization is finished.
This bit is not under Configuration Change Protection (CCP).

Related Links

19.3.6 Synchronization
19.3.7 Configuration Change Protection

20. TCA - 16-bit Timer/Counter Type A

20.1 Features

- 16-bit timer/counter
- Three compare channels
- Double buffered timer period setting
- Double buffered compare channels
- Waveform generation:
  - Frequency generation
  - Single-slope PWM (pulse width modulation)
  - Dual-slope PWM
- Count on event
- Timer overflow interrupts/events
- One compare match per compare channel
- Two 8-bit timer/counters in Split Mode

20.2 Overview

The flexible 16-bit PWM Timer/Counter type A (TCA) provides accurate program execution timing, frequency and waveform generation, and command execution.

A TCA consists of a base counter and a set of compare channels. The base counter can be used to count clock cycles or events, or let events control how it counts clock cycles. It has direction control and period setting that can be used for timing. The compare channels can be used together with the base counter to do compare match control, frequency generation, and pulse width waveform modulation.

Depending on the mode of operation, the counter is cleared, reloaded, incremented, or decremented at each timer/counter clock or event input.

A timer/counter can be clocked and timed from the peripheral clock with optional prescaling or from the event system. The event system can also be used for direction control or to synchronize operations.

By default, the TCA is a 16-bit timer/counter. The timer/Counter has a Split mode feature that splits it into two 8-bit timer/counters with three compare channels each.

A block diagram of the 16-bit timer/counter with closely related peripheral modules (in grey) is shown below.

Figure 20-1. 16-bit Timer/counter and Closely Related Peripherals

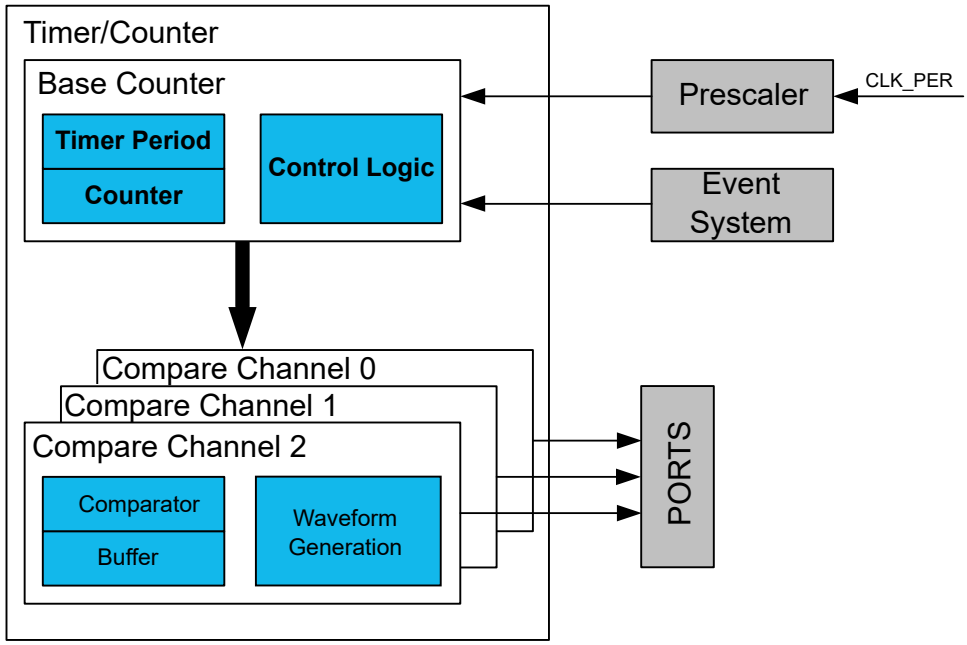

This device provides one instance of the TCA peripheral, TCA0.

20.2.1 Block Diagram

The below figure shows a detailed block diagram of the timer/counter.

Figure 20-2. Timer/Counter Block Diagram

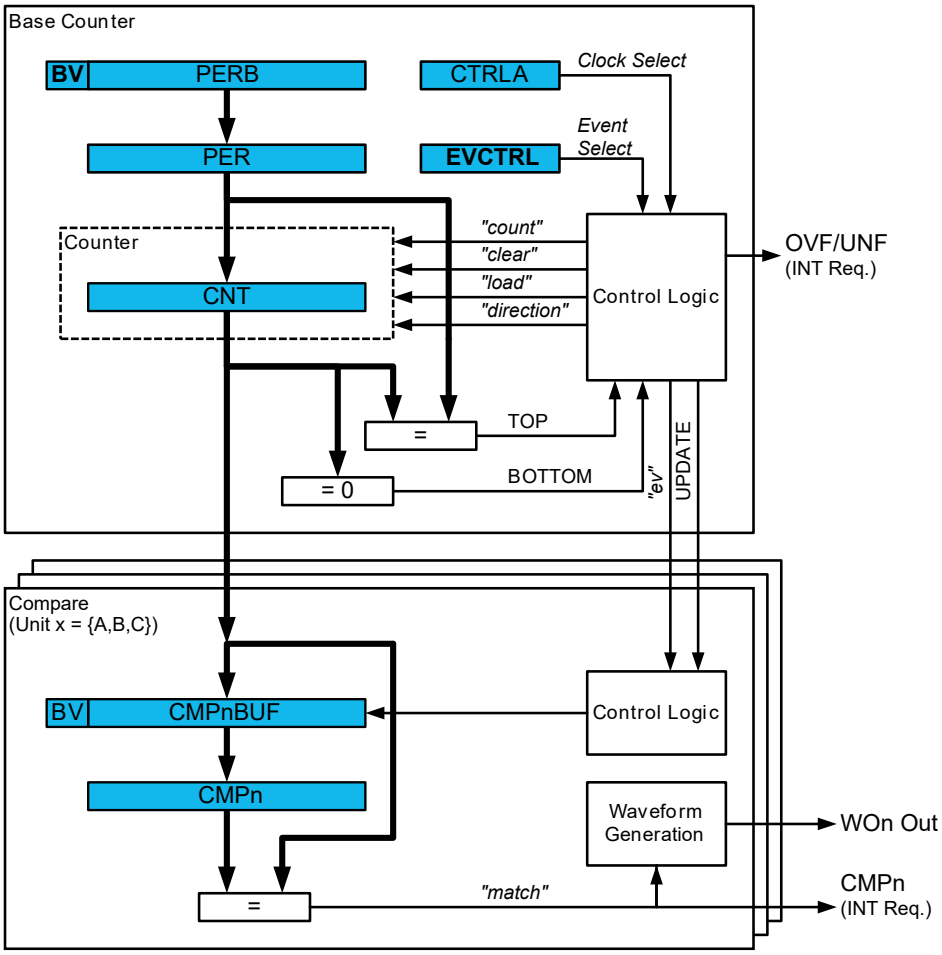

The counter register (CNT), period registers with buffer (PER and PERBUF), and compare registers with buffers (CMPx and CMPBUFx) are 16-bit registers. All buffer registers have a buffer valid (BV) flag that indicates when the buffer contains a new value.

During normal operation, the counter value is continuously compared to zero and the period (PER) value to determine whether the counter has reached TOP or BOTTOM.

The counter value is also compared to the CMPx registers. These comparisons can be used to generate interrupt requests. The waveform generator modes use these comparisons to set the waveform period or pulse width.

A prescaled peripheral clock and events from the event system can be used to control the counter.

Figure 20-3. Timer/Counter Clock Logic

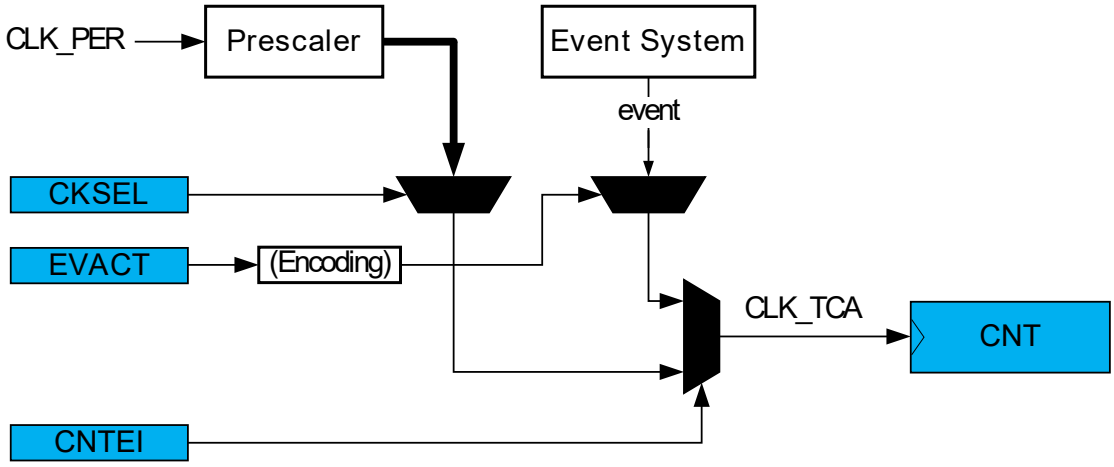

20.2.2 Signal Description

Signal	Description[1]	Type
WO[2:0]	Digital output	Waveform output
WO[5:3]	Digital output	Waveform output - Split mode only

Note:

1. Refer to the I/O Multiplexing and Considerations section to see the availability of WOn on pins.

20.2.3 System Dependencies

In order to use this peripheral, other parts of the system must be configured correctly, as described below.

Table 20-1. TCA System Dependencies

Dependency	Applicable	Peripheral
Clocks	Yes	CLKCTRL
I/O Lines and Connections	Yes	WO[5:0]
Interrupts	Yes	CPUINT
Events	Yes	EVSYS
Debug	Yes	UPDI

Related Links

20.2.3.1 Clocks
20.2.3.5 Debug Operation
20.2.3.3 Interrupts
20.2.3.4 Events

20.2.3.1 Clocks

This peripheral uses the system clock CLK_PER, and has its own prescaler.

Related Links

10. CLKCTRL - Clock Controller

20.2.3.2 I/O Lines and Connections

Using the I/O lines of the peripheral requires configuration of the I/O pins.

Related Links

5. I/O Multiplexing and Considerations
16. PORT - I/O Pin Configuration

20.2.3.3 Interrupts

Using the interrupts of this peripheral requires the Interrupt Controller to be configured first.

Related Links

13. CPUINT - CPU Interrupt Controller
8.7.3 SREG
20.3.5 Interrupts

20.2.3.4 Events

The events of this peripheral are connected to the Event System.

Related Links

14. EVSYS - Event System

20.2.3.5 Debug Operation

When run-time debugging, this peripheral will continue normal operation. Halting the CPU in debugging mode will halt normal operation of the peripheral.

This peripheral can be forced to operate with halted CPU by writing a '1' to the Debug Run bit (DBGRUN) in the Debug Control register of the peripheral (*peripheral*.DBGCTRL).

Related Links

33. UPDI - Unified Program and Debug Interface

20.3 Functional Description

20.3.1 Definitions

The following definitions are used throughout the documentation:

Table 20-2. Timer/Counter Definitions

Name	Description
BOTTOM	The counter reaches BOTTOM when it becomes zero.
MAX	The counter reaches MAXimum when it becomes all ones.
TOP	The counter reaches TOP when it becomes equal to the highest value in the count sequence.
UPDATE	The update condition is met when the timer/counter reaches BOTTOM or TOP, depending on the waveform generator mode.
CNT	Counter register value
CMP	Compare register value

In general, the term “timer” is used when the timer/counter is counting periodic clock ticks. The term “counter” is used when the input signal has sporadic or irregular ticks.

20.3.2 Initialization

To start using the timer/counter in a basic mode, follow these steps:

- Write a TOP value to the Period register (TCA.PER)
- Enable the peripheral by writing a '1' to the ENABLE bit in the Control A register (TCA.CTRLA).
  The counter will start counting clock ticks according to the prescaler setting in the Clock Select bit field (CLKSEL) in TCA.CTRLA.

- Optional: By writing a '1' to the Enable Count on Event Input bit (CNTEI) in the Event Control register (TCA.EVCTRL), Event inputs are counted instead of clock ticks.
- The counter value can be read from the Counter bit field (CNT) in the Counter register (TCA.CNT).

20.3.3 Operation

20.3.3.1 Normal Operation

In normal operation, the counter is counting clock ticks in the direction selected by the Direction bit (DIR) in the Control E register (TCA.CTRLE), until it reaches TOP or BOTTOM. The clock ticks are from the peripheral clock CLK_PER, optionally prescaled, depending on the Clock Select bit field (CLKSEL) in the Control A register (TCA.CTRLA).

When up-counting and TOP is reached, the counter will wrap to zero at the next clock tick. When down-counting, the counter is reloaded with the Period register value (TCA.PER) when BOTTOM is reached.

Figure 20-4. Normal Operation

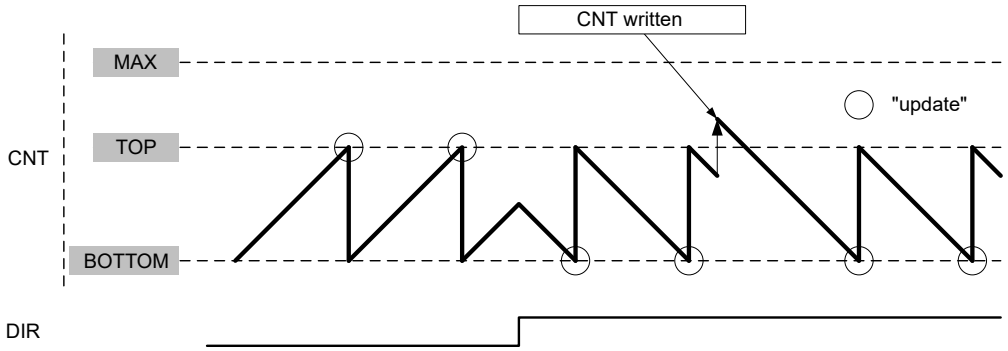

It is possible to change the Counter value in the Counter register (TCA.CNT) when the counter is running. The write access to TCA.CNT has higher priority than count, clear, or reload, and will be immediate. The direction of the counter can also be changed during normal operation by writing to DIR in TCA.CTRLE.

20.3.3.2 Double Buffering

The Period register value (TCA.PER) and the Compare n register values (TCA.CMPn) are all double buffered (TCA.PERBUF and TCA.CMPnBUF).

Each buffer register has a Buffer Valid flag (PERBV, CMPnBV) in the Control F register (TCA.CTRLF), which indicates that the buffer register contains a valid, i.e. new, value that can be copied into the corresponding Period or Compare register. When the Period register and Compare n registers are used for a Compare operation, the BV flag is set when data is written to the buffer register, and cleared on an UPDATE condition. This is shown for a Compare register in below.

Figure 20-5. Period and Compare Double Buffering

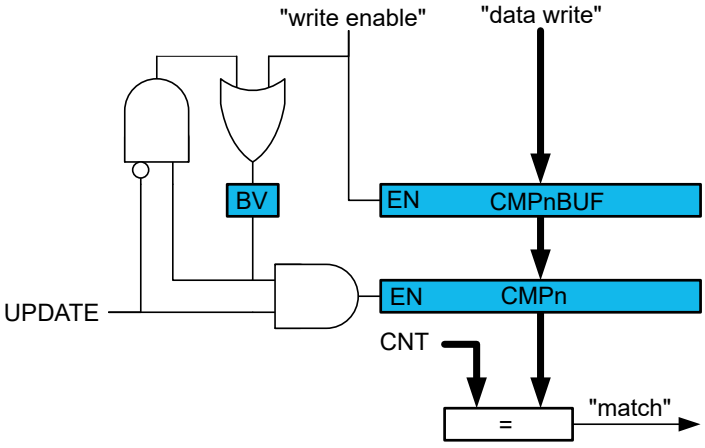

Both the TCA.CMPn and TCA.CMPnBUF registers are available as I/O registers. This allows initialization and bypassing of the buffer register and the double buffering function.

20.3.3.3 Changing the Period

The Counter period is changed by writing a new TOP value to the Period register (TCA.PER).

No Buffering: If double buffering is not used, any period update is immediate.

Figure 20-6. Changing the Period without Buffering

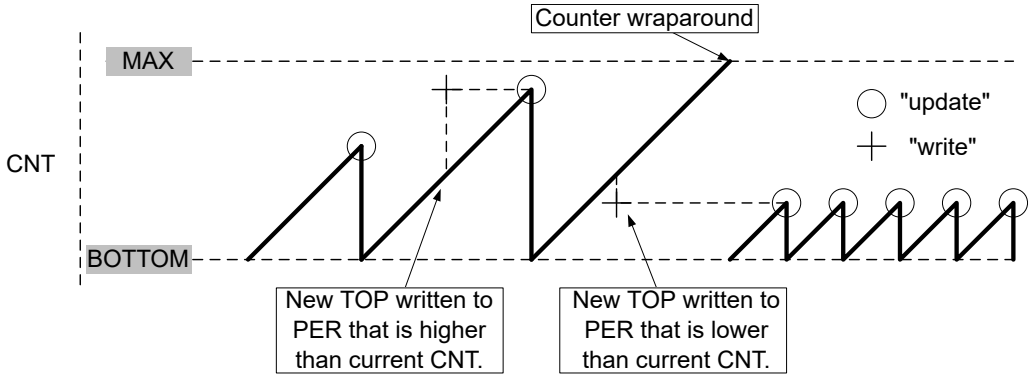

A counter wraparound can occur in any mode of operation when up-counting without buffering. This is due to the fact that the registers TCA.CNT and TCA.PER are continuously compared: if a new TOP value is written to TCA.PER that is lower than current TCA.CNT, the counter will wrap first before a compare match happened.

Figure 20-7. Unbuffered Dual-slope Operation

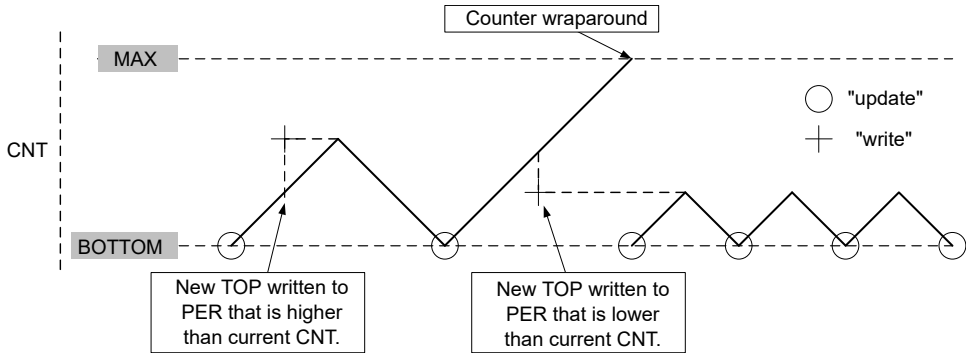

With Buffering: When double buffering is used, the buffer can be written at any time and still maintain correct operation. The TCA.PER is always updated on the UPDATE condition, as shown for dual-slope operation in the figure below. This prevents wraparound and the generation of odd waveforms.

Figure 20-8. Changing the Period Using Buffering

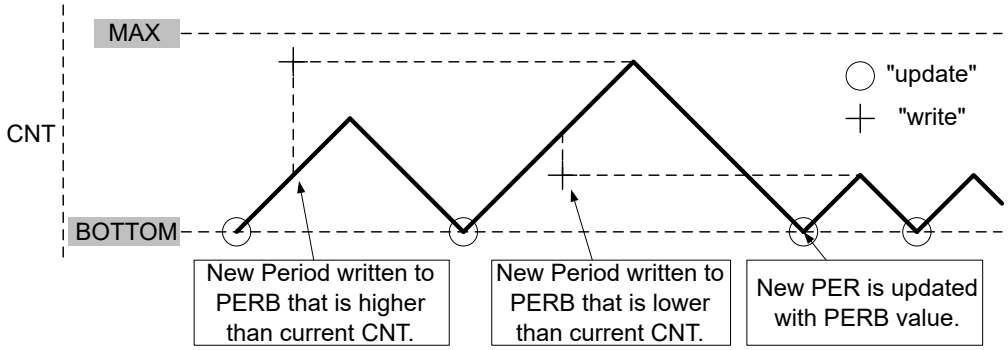

20.3.3.4 Compare Channel

Each Compare Channel n continuously compares the counter value (TCA.CNT) with the Compare n register (TCA.CMPn). If TCA.CNT equals TCA.CMPn, the comparator n signals a match. The match will set the Compare Channel's interrupt flag at the next timer clock cycle, and the optional interrupt is generated.

The Compare n Buffer register (TCA.CMPnBUF) provides double buffer capability equivalent to that for the period buffer. The double buffering synchronizes the update of the TCA.CMPn register with the buffer value to either the TOP or BOTTOM of the counting sequence, according to the UPDATE condition. The synchronization prevents the occurrence of odd-length, non-symmetrical pulses for glitch-free output.

20.3.3.4.1 Waveform Generation

The compare channels can be used for waveform generation on the corresponding port pins. To make the waveform visible on the connected port pin, the following requirements must be fulfilled:

1. A waveform generation mode must be selected by writing the WGMODE bit field in TCA.CTRLB.
2. The TCA is counting clock tick, not Events (CNTEI=0 in TCA.EVCTRL)
3. The compare channels used must be enabled (CMPnEN=1 in TCA.CTRLB). This will override the corresponding PORT pin output register. An alternative pin can be selected by writing to the respective TCA Waveform Output n bit (TCA0n) in the Control C register of the Port Multiplexer (PORTMUX.CTRLC).
4. The direction for the associated Port pin n must be configured as output (PORT.DIR[n]=1).
5. Optional: Enable inverted waveform output for the associated Port pin n (INVEN=1 in PORT.PINn).

20.3.3.4.2 Frequency (FRQ) Waveform Generation

For frequency generation, the period time (T) is controlled by a TCA.CMPn register instead of the Period register (TCA.PER). The waveform generation output WG is toggled on each compare match between the TCA.CNT and TCA.CMPn registers.

Figure 20-9. Frequency Waveform Generation

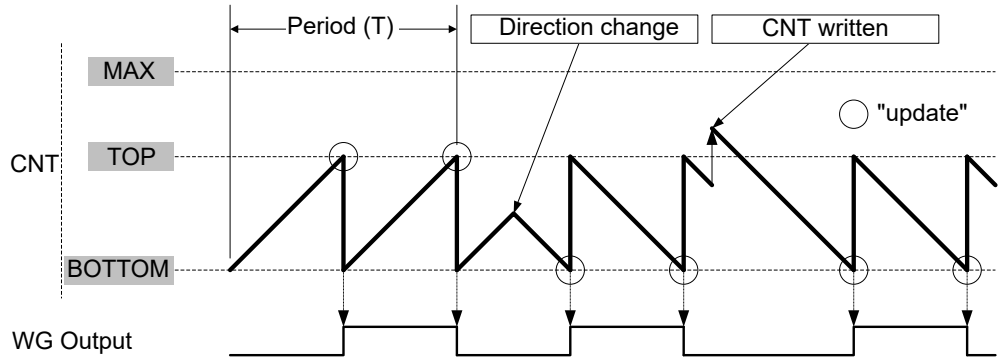

The waveform frequency (f_{FRQ}) is defined by the following equation:

$$f_{\mathrm{FRQ}} = \frac{\mathrm{f_{CLK_PER}}}{2N(\mathrm{CMPn}+1)}$$

where *N* represents the prescaler divider used (CLKSEL in TCA.CTRLA), and f_{CLK_PER} is the system clock for the peripherals.

The maximum frequency of the waveform generated is half of the peripheral clock frequency ($f_{CLK_PER}/2$) when TCA.CMPn is written to zero (0x0000) and no prescaling is used (*N*=1, CLKSEL=0x0 in TCA.CTRLA).

20.3.3.4.3 Single-Slope PWM Generation

For single-slope Pulse Width Modulation (PWM) generation, the period (T) is controlled by TCA.PER, while the values of TCA.CMPn control the duty cycle of the WG output. The figure below shows how the counter counts from BOTTOM to TOP and then restarts from BOTTOM. The waveform generator (WO) output is set at TOP, and cleared on the compare match between the TCA.CNT and TCA.CMPn registers.

Figure 20-10. Single-Slope Pulse Width Modulation

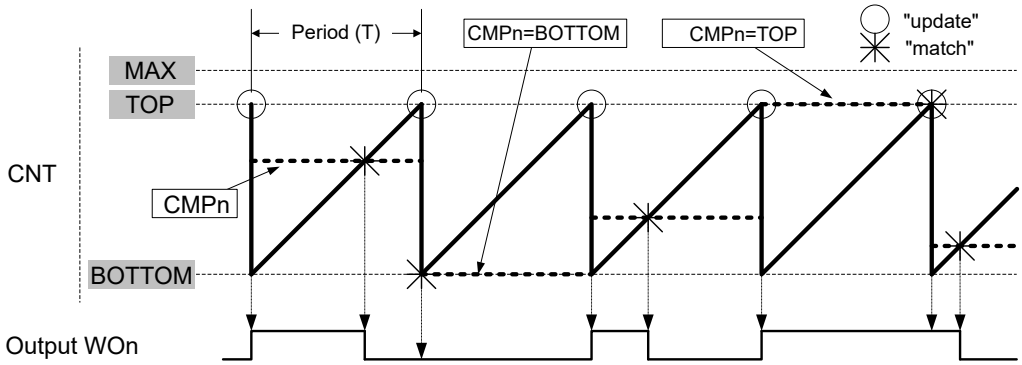

The TCA.PER register defines the PWM resolution. The minimum resolution is 2 bits (TCA.PER=0x0003), and the maximum resolution is 16 bits (TCA.PER=MAX).

The following equation calculates the exact resolution for single-slope PWM (R_{PWM_SS}):

$$R_{\mathrm{PWM_SS}} = \frac{\log(\mathrm{PER}+1)}{\log(2)}$$

The single-slope PWM frequency (f_{PWM_SS}) depends on the period setting (TCA_PER), the system's peripheral clock frequency f_{CLK_PER}, the TCA prescaler (CLKSEL in TCA.CTRLA). It is calculated by the following equation:

$$f_{\mathrm{PWM_SS}} = \frac{f_{\mathrm{CLK_PER}}}{N(\mathrm{PER}+1)}$$

where *N* represents the prescaler divider used.

20.3.3.4.4 Dual-slope PWM

For dual-slope PWM generation, the period (T) is controlled by TCA.PER, while the values of TCA.CMPn control the duty cycle of the WG output.

The figure below shows how for dual-slope PWM the counter counts repeatedly from BOTTOM to TOP and then from TOP to BOTTOM. The waveform generator output is set on BOTTOM, cleared on compare match when up-counting, and set on compare match when down-counting.

Figure 20-11. Dual-slope Pulse Width Modulation

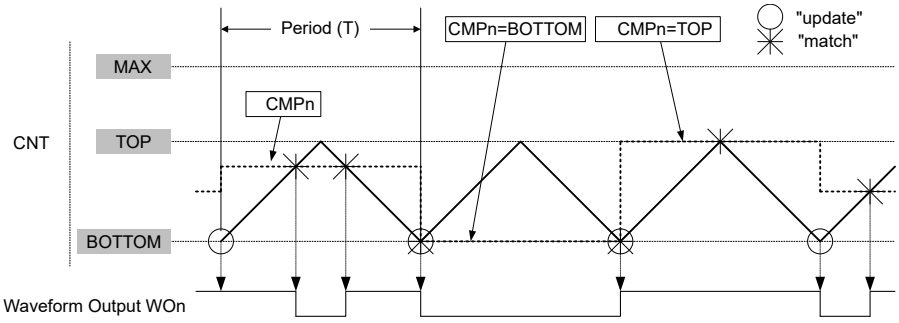

Using dual-slope PWM results in a lower maximum operation frequency compared to the single-slope PWM operation.

The period register (TCA.PER) defines the PWM resolution. The minimum resolution is 2 bits (TCA.PER=0x0003), and the maximum resolution is 16 bits (TCA.PER=MAX).

The following equation calculate the exact resolution for dual-slope PWM (R_{PWM_DS}):

$$R_{\mathrm{PWM_DS}} = \frac{\log(\mathrm{PER}+1)}{\log(2)}$$

The PWM frequency depends on the period setting (TCA.PER), the peripheral clock frequency (f_{CLK_PER}), and the prescaler divider used (CLKSEL in TCA.CTRLA). It is calculated by the following equation:

$$f_{PWM_DS} = \frac{f_{CLK_PER}}{2N \cdot PER}$$

N represents the prescaler divider used.

20.3.3.4.5 Port Override for Waveform Generation

To make the waveform generation available on the Port pins, the corresponding Port pin direction must be set as output (PORT.DIR[n]=1). The TCA will override the port pin values when the compare channel is enabled (CMPnEN=1 in TCA.CTRLB) and a waveform generation mode is selected.

The figure below shows the port override for TCA. The timer/counter compare channel will override the port pin output value (OUT) on the corresponding port pin. Enabling inverted I/O on the port pin (INVEN=1 in PORT.PINn) inverts the corresponding WG output.

Figure 20-12. Port Override for Timer/Counter Type A

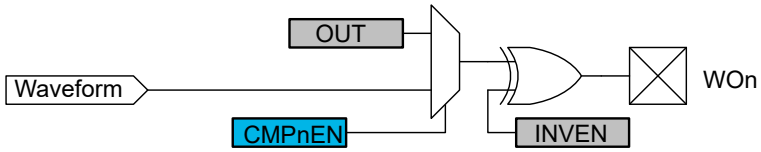

20.3.3.5 Timer/Counter Commands

A set of commands can be issued by software to immediately change the state of the peripheral. These commands give direct control of the UPDATE, RESTART, and RESET signals. A command is issued by writing the respective value to the Command bit field (CMD) in the Control E register (TCA.CTRLESET).

An `UPDATE` command has the same effect as when an update condition occurs, except that the `UPDATE` command is not affected by the state of the Lock Update bit (LUPD) in the Control E register (TCA.CTRLE).

The software can force a restart of the current waveform period by issuing a `RESTART` command. In this case the counter, direction, and all compare outputs are set to zero.

A `RESET` command will set all timer/counter registers to their initial values. A `RESET` can be issued only when the timer/counter is not running (ENABLE=0 in TCA.CTRLA).

20.3.3.6 Split Mode - Two 8-Bit Timer/Counters

Split Mode Overview

To double the number of timers and PWM channels in the TCA, a Split Mode is provided. In this Split Mode, the 16-bit timer/counter acts as two separate 8-bit timers, which each have three compare channels for PWM generation. The split mode will only work with single slope down count. Split Mode does not support Event action controlled operation.

Split Mode Differences to Normal Mode

- Count
  - Down-count only
  - Timer/Counter counter high and low byte are independent (TCA.LCNT, TCA.HCNT)
- Waveform generation
  - Single Slope PWM only (WGMODE=SINGLESLOPE in TCA.CTRLB)
- Interrupt
  - No change for low byte Timer/Counter (TCA.LCNT)
  - Underflow interrupt for high byte Timer/Counter (TCA.HCNT)
  - No compare interrupt or flag for High-byte Compare n registers (TCA.HCMPn)
- Event actions: Not compatible
- Buffer registers and Buffer Valid flags: Unused
- Register access: Byte access to all registers.
- Temp register: Unused, 16-bit register of the Normal Mode are accessed as 8-bit 'TCA_H' and 'TCA_L', respectively.

Block Diagram

Figure 20-13. Timer/Counter Block Diagram Split Mode

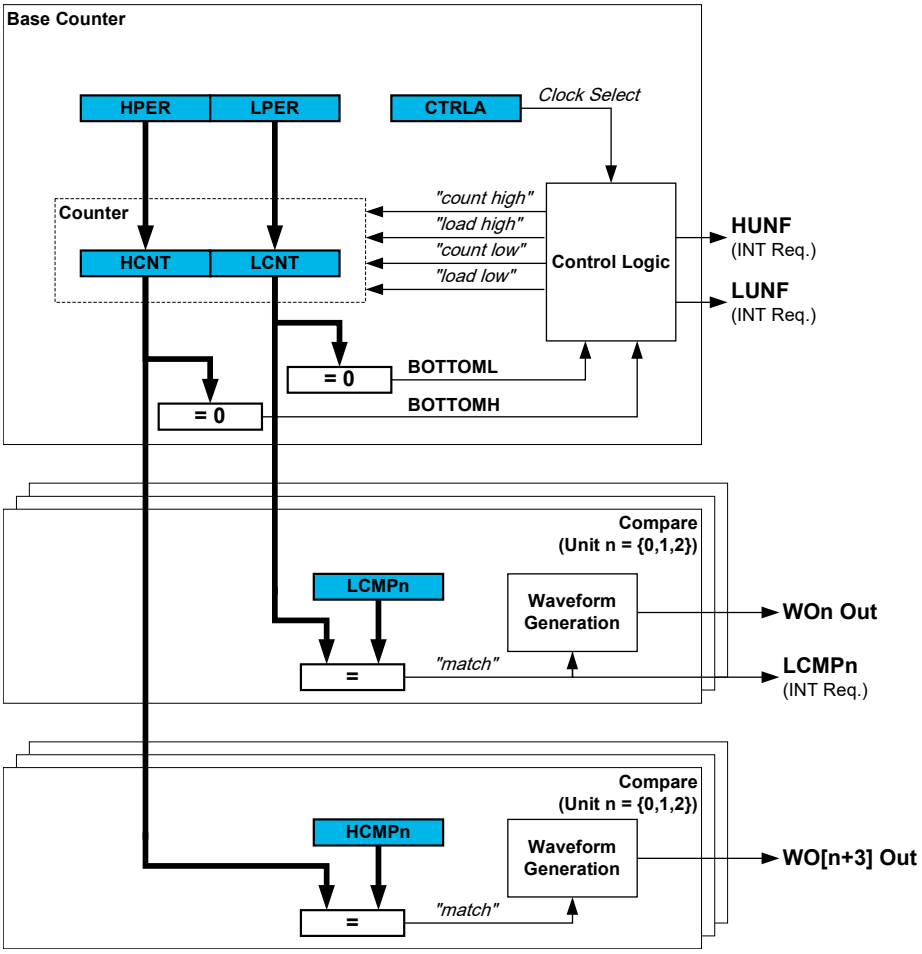

Split Mode Initialization

When shifting between Normal Mode and Split Mode, the functionality of some registers and bits change, but their values do not. For this reason, disabling the peripheral (ENABLE=0 in TCA.CTRLA) and doing a Hard Reset (CMD=RESET in TCA.CTRLESET) is recommended when changing the mode to avoid unexpected behavior.

To start using the timer/counter in basic Split Mode after a Hard Reset, follow these steps:

- Enable Split Mode by writing a '1' to the Split Mode Enable bit in the Control D register (SPLITM in TCA.CTRLD).
- Write a TOP value to the Period registers (TCA.PER)
- Enable the peripheral by writing a '1' to the ENABLE bit in the Control A register (TCA.CTRLA).
  The counter will start counting clock ticks according to the prescaler setting in the Clock Select bit field (CLKSEL) in TCA.CTRLA.
- The counter values can be read from the Counter bit field in the Counter registers (TCA.CNT).

Activating Split Mode results in changes to the functionality of some registers and register bits. The modifications are described in a separate register map.

Related Links

20.6 Register Summary - TCA in Split Mode (CTRLD.SPLITM=1)

20.3.4 Events

The peripheral can take the following actions on an input Event:

- The counter counts positive edges of the Event signal.
- The counter counts both positive and negative edges of the Event signal.
- The counter counts prescaled clock cycles as long as the Event signal is high.
- The counter counts prescaled clock cycles. Event signal controls the direction of counting. Up-count when Event signal is low, down-count when Event signal is high.

The specific action is selected by writing to the Event Action bits (EVACT) in the Event Control register (TCA.EVCTRL). Events as input are enabled by writing a '1' to the Enable Count on Event Input bit (CNTEI in TCA.EVCTRL).

Event controlled operation is not available in Split Mode.

20.3.5 Interrupts

Table 20-3. Available Interrupt Vectors and Sources in Normal Mode

Offset	Name	Vector Description	Conditions
0x00	OVF	Overflow and Compare match interrupt	The counter has reached its top value and wrapped to zero.
0x04	CMP0	Compare channel 0 interrupt	Match between the counter value and the Compare 0 register.
0x06	CMP1	Compare channel 1 interrupt	Match between the counter value and the Compare 1 register.
0x08	CMP2	Compare channel 2 interrupt	Match between the counter value and the Compare 2 register.

Table 20-4. Available Interrupt Vectors and Sources in Split Mode

Offset	Name	Vector Description	Conditions
0x00	LUNF	Low-byte Underflow interrupt	Low-byte timer reaches BOTTOM.
0x02	HUNF	High-byte Underflow interrupt	High-byte timer reaches BOTTOM.
0x04	LCMP0	Compare channel 0 interrupt	Match between the counter value and the low-byte of Compare 0 register.
0x06	LCMP1	Compare channel 1 interrupt	Match between the counter value and the low-byte of Compare 1 register.
0x08	LCMP2	Compare channel 2 interrupt	Match between the counter value and the low-byte of the Compare 2 register.

When an interrupt condition occurs, the corresponding Interrupt Flag is set in the Interrupt Flags register of the peripheral (*peripheral*.INTFLAGS).

An interrupt source is enabled or disabled by writing to the corresponding enable bit in the peripheral's Interrupt Control register (*peripheral*.INTCTRL).

An interrupt request is generated when the corresponding interrupt source is enabled and the Interrupt Flag is set. The interrupt request remains active until the Interrupt Flag is cleared. See the peripheral's INTFLAGS register for details on how to clear Interrupt Flags.

Related Links

8. AVR CPU

8.7.3 SREG

20.3.6 Sleep Mode Operation

The timer/counter will halt operation in all sleep modes.

20.3.7 Configuration Change Protection

Not applicable.

20.4 Register Summary - TCA in Normal Mode (CTRLD.SPLITM=0)

Offset	Name	Bit Pos.								
0x00	CTRLA	7:0					CLKSEL[2:0]			ENABLE
0x01	CTRLB	7:0		CMPnEN2	CMPnEN1	CMPnEN0	ALUPD	WGMODE[2:0]		
0x02	CTRLC	7:0						CMP2OV	CMP1OV	CMP0OV
0x03	CTRLD	7:0								SPLITM
0x04	CTRLECLR	7:0					CMD[1:0]		LUPD	DIR
0x05	CTRLESET	7:0					CMD[1:0]		LUPD	DIR
0x06	CTRLFCLR	7:0					CMP2BV	CMP1BV	CMP0BV	PERBV
0x07	CTRLFSET	7:0					CMP2BV	CMP1BV	CMP0BV	PERBV
0x08	Reserved									
0x09	EVCTRL	7:0						EVACT[1:0]		CNTEI
0x0A	INTCTRL	7:0		CMP2	CMP1	CMP0				OVF
0x0B	INTFLAGS	7:0		CMP2	CMP1	CMP0				OVF
0x0C ... 0x0D	Reserved									
0x0E	DBGCTRL	7:0								DBGRUN
0x0F	TEMP	7:0	TEMP[7:0]							
0x10 ... 0x1F	Reserved									
0x20	CNT	7:0	CNT[7:0]							
		15:8	CNT[15:8]							
0x22 ... 0x25	Reserved									
0x26	PER	7:0	PER[7:0]							
		15:8	PER[15:8]							
0x28	CMP0	7:0	CMP[7:0]							
		15:8	CMP[15:8]							
0x2A	CMP1	7:0	CMP[7:0]							
		15:8	CMP[15:8]							
0x2C	CMP2	7:0	CMP[7:0]							
		15:8	CMP[15:8]							
0x2E ... 0x35	Reserved									
0x36	PERBUF	7:0	PERBUF[7:0]							
		15:8	PERBUF[15:8]							
0x38	CMP0BUF	7:0	CMPBUF[7:0]							
		15:8	CMPBUF[15:8]							
0x3A	CMP1BUF	7:0	CMPBUF[7:0]							
		15:8	CMPBUF[15:8]							
0x3C	CMP2BUF	7:0	CMPBUF[7:0]							
		15:8	CMPBUF[15:8]							

20.5 Register Description - Normal Mode

20.5.1 Control A

Name: CTRLA
Offset: 0x00
Reset: 0x00
Property: -

Bit	7	6	5	4	3	2	1	0
					CLKSEL[2:0]			ENABLE
Access					R/W	R/W	R/W	R/W
Reset					0	0	0	0

Bits 3:1 – CLKSEL[2:0] Clock Select
These bits select the clock frequency for the timer/counter.

Value	Name	Description
0x0	DIV1	$f_{TCA} = f_{CLK_PER}/1$
0x1	DIV2	$f_{TCA} = f_{CLK_PER}/2$
0x2	DIV4	$f_{TCA} = f_{CLK_PER}/4$
0x3	DIV8	$f_{TCA} = f_{CLK_PER}/8$
0x4	DIV16	$f_{TCA} = f_{CLK_PER}/16$
0x5	DIV64	$f_{TCA} = f_{CLK_PER}/64$
0x6	DIV256	$f_{TCA} = f_{CLK_PER}/256$
0x7	DIV1024	$f_{TCA} = f_{CLK_PER}/1024$

Bit 0 – ENABLE Enable

Value	Description
0	The peripheral is disabled
1	The peripheral is enabled

20.5.2 Control B - Normal Mode

Name: CTRLB
Offset: 0x01
Reset: 0x00
Property: -

Bit	7	6	5	4	3	2	1	0
		CMPnEN2	CMPnEN1	CMPnEN0	ALUPD	WGMODE[2:0]		
Access		R/W	R/W	R/W	R/W	R/W	R/W	R/W
Reset		0	0	0	0	0	0	0

Bits 4, 5, 6 – CMPnEN Compare n Enable
In the FRQ or PWM waveform generation mode, these bits will override the PORT output register for the corresponding pin.

Value	Description
0	PORT output settings for the pin with WOn output respected.
1	PORT output settings for pin with WOn output overridden in FRQ or PWM waveform generation mode.

Bit 3 – ALUPD Auto Lock Update
The Auto Lock Update feature controls the Lock Update (LUPD) bit in the TCA.CTRLE register. When ALUPD is written to '1', LUPD will be set to '1' until the Buffer Valid (CMPnBV) bits of all enabled compare channels are '1'. This condition will clear LUPD.
It will remain cleared until the next UPDATE condition, where the buffer values will be transferred to the CMPn registers and LUPD will be set to '1' again. This makes sure that CMPnBUF register values are not transferred to the CMPn registers until all enabled compare buffers are written.

Value	Description
0	LUPD in TCA.CTRLE not altered by system.
1	LUPD in TCA.CTRLE set and cleared automatically.

Bits 2:0 – WGMODE[2:0] Waveform Generation Mode
These bits select the waveform generation mode, and control the counting sequence of the counter, TOP value, UPDATE condition, interrupt condition, and type of waveform that is generated.
No waveform generation is performed in the normal mode of operation. For all other modes, the result from the waveform generator will only be directed to the PORT pins if the corresponding CMPnEN bit has been set to enable this. The port pin direction must be set as output.

Table 20-5. Timer Waveform Generation Mode

WGMODE[2:0]	Group Configuration	Mode of Operation	Top	Update	OVF
000	NORMAL	Normal	PER	TOP	TOP
001	FRQ	Frequency	CMP0	TOP	TOP
010	-	Reserved	-	-	-
011	SINGLESLOPE	Single-slope PWM	PER	BOTTOM	BOTTOM
100	-	Reserved	-	-	-
101	DSTOP	Dual-slope PWM	PER	BOTTOM	TOP
110	DSBOTH	Dual-slope PWM	PER	BOTTOM	TOP and BOTTOM
111	DSBOTTOM	Dual-slope PWM	PER	BOTTOM	BOTTOM

Value	Name	Description
0x0	NORMAL	Normal operation mode
0x1	FRQ	Frequency mode
0x3	SINGLESLOPE	Single-slope PWM mode

Value	Name	Description
0x5	DSTOP	Dual-slope PWM mode
0x6	DSBOTH	Dual-slope PWM mode
0x7	DSBOTTOM	Dual-slope PWM mode
Other	-	Reserved

20.5.3 Control C - Normal Mode

Name: CTRLC
Offset: 0x02
Reset: 0x00
Property: -

Bit	7	6	5	4	3	2	1	0
						CMP2OV	CMP1OV	CMP0OV
Access						R/W	R/W	R/W
Reset						0	0	0

Bit 2 – CMP2OV Compare Output Value 2
See CMP0OV.

Bit 1 – CMP1OV Compare Output Value 1
See CMP0OV.

Bit 0 – CMP0OV Compare Output Value 0
The CMPnOV bits allow direct access to the waveform generator's output compare value when the timer/counter is not enabled. This is used to set or clear the WG output value when the timer/counter is not running.

20.5.4 Control D

Name: CTRLD
Offset: 0x03
Reset: 0x00
Property: -

Bit	7	6	5	4	3	2	1	0
								SPLITM
Access								R/W
Reset								0

Bit 0 – SPLITM Enable Split Mode
This bit sets the timer/counter in split mode operation. It will then work as two 8-bit timer/counters. The register map will change compared to normal 16-bit mode.

20.5.5 Control Register E Clear - Normal Mode

Name: CTRLECLR
Offset: 0x04
Reset: 0x00
Property: -

The individual status bit can be cleared by writing a one to its bit location. This allows each bit to be cleared without use of a read-modify-write operation on a single register.
Each Status bit can be read out either by reading TCA.CTRLESET or TCA.CTRLECLR.

Bit	7	6	5	4	3	2	1	0
					CMD[1:0]		LUPD	DIR
Access					R/W	R/W	R/W	R/W
Reset					0	0	0	0

Bits 3:2 – CMD[1:0] Command
These bits are used for software control of update, restart, and reset of the timer/counter. The command bits are always read as zero.

Value	Name	Description
0x0	NONE	No command
0x1	UPDATE	Force update
0x2	RESTART	Force restart
0x3	RESET	Force hard Reset (ignored if TC is enabled)

Bit 1 – LUPD Lock Update
Lock update can be used to ensure that all buffers are valid before an update is performed.

Value	Description
0	The buffered registers are updated as soon as an UPDATE condition has occurred.
1	No update of the buffered registers is performed, even though an UPDATE condition has occurred.

Bit 0 – DIR Counter Direction
Normally this bit is controlled in hardware by the waveform generation mode or by event actions, but this bit can also be changed from software.

Value	Description
0	The counter is counting up (incrementing).
1	The counter is counting down (decrementing).

20.5.6 Control Register E Set - Normal Mode

Name: CTRLESET
Offset: 0x05
Reset: 0x00
Property: -

The individual status bit can be set by writing a '1' to its bit location. This allows each bit to be set without use of a read-modify-write operation on a single register.
Each Status bit can be read out either by reading TCA.CTRLESET or TCA.CTRLECLR.

Bit	7	6	5	4	3	2	1	0
					CMD[1:0]		LUPD	DIR
Access					R/W	R/W	R/W	R/W
Reset					0	0	0	0

Bits 3:2 – CMD[1:0] Command
These bits are used for software control of update, restart, and reset of the timer/counter. The command bits are always read as zero.

Value	Name	Description
0x0	NONE	No command
0x1	UPDATE	Force update
0x2	RESTART	Force restart
0x3	RESET	Force hard Reset (ignored if TC is enabled)

Bit 1 – LUPD Lock Update
Locking the update ensures that all buffers are valid before an update is performed.

Value	Description
0	The buffered registers are updated as soon as an UPDATE condition has occurred.
1	No update of the buffered registers is performed, even though an UPDATE condition has occurred.

Bit 0 – DIR Counter Direction
Normally this bit is controlled in hardware by the waveform generation mode or by event actions, but this bit can also be changed from software.

Value	Description
0	The counter is counting up (incrementing).
1	The counter is counting down (decrementing).

20.5.7 Control Register F Clear

Name: CTRLFCLR
Offset: 0x06
Reset: 0x00
Property: -

The individual status bit can be cleared by writing a one to its bit location. This allows each bit to be cleared without use of a read-modify-write operation on a single register.

Bit	7	6	5	4	3	2	1	0
					CMP2BV	CMP1BV	CMP0BV	PERBV
Access					R/W	R/W	R/W	R/W
Reset					0	0	0	0

Bit 3 – CMP2BV Compare 2 Buffer Valid
See CMP0BV.

Bit 2 – CMP1BV Compare 1 Buffer Valid
See CMP0BV.

Bit 1 – CMP0BV Compare 0 Buffer Valid
The CMPnBV bits are set when a new value is written to the corresponding CMPnBUF register. These bits are automatically cleared on an UPDATE condition.

Bit 0 – PERBV Period Buffer Valid
This bit is set when a new value is written to the PERB register. This bit is automatically cleared on an UPDATE condition.

20.5.8 Control Register F Set

Name: CTRLFSET
Offset: 0x07
Reset: 0x00
Property: -

The individual status bit can be set by writing a one to its bit location. This allows each bit to be set without use of a read-modify-write operation on a single register.

Bit	7	6	5	4	3	2	1	0
					CMP2BV	CMP1BV	CMP0BV	PERBV
Access					R/W	R/W	R/W	R/W
Reset					0	0	0	0

Bit 3 – CMP2BV Compare 2 Buffer Valid
See CMP0BV.

Bit 2 – CMP1BV Compare 1 Buffer Valid
See CMP0BV.

Bit 1 – CMP0BV Compare 0 Buffer Valid
The CMPnBV bits are set when a new value is written to the corresponding CMPnBUF register. These bits are automatically cleared on an UPDATE condition.

Bit 0 – PERBV Period Buffer Valid
This bit is set when a new value is written to the PERB register. This bit is automatically cleared on an UPDATE condition.

20.5.9 Event Control

Name: EVCTRL
Offset: 0x09
Reset: 0x00
Property: -

Bit	7	6	5	4	3	2	1	0
						EVACT[1:0]		CNTEI
Access						R/W	R/W	R/W
Reset						0	0	0

Bits 2:1 – EVACT[1:0] Event Action
These bits define on what type of event action the counter will increment or decrement.

Value	Name	Description
0x0	EVACT_POSEDGE	Count on positive edge event
0x1	EVACT_ANYEDGE	Count on any edge event
0x2	EVACT_HIGHLVL	Count on prescaled clock while event line is 1.
0x3	EVACT_UPDOWN	Count on prescaled clock. Event controls count direction. Up-count when event line is 0, down-count when event line is 1.

Bit 0 – CNTEI Enable Count on Event Input

Value	Description
0	Counting on Event input is disabled.
1	Counting on Event input is enabled according to EVACT bit field.

20.5.10 Interrupt Control Register - Normal Mode

Name: INTCTRL
Offset: 0x0A
Reset: 0x00
Property: -

Bit	7	6	5	4	3	2	1	0
		CMP2	CMP1	CMP0				OVF
Access		R/W	R/W	R/W				R/W
Reset		0	0	0				0

Bit 6 – CMP2 Compare Channel 2 Interrupt Enable
See CMP0.

Bit 5 – CMP1 Compare Channel 1 Interrupt Enable
See CMP0.

Bit 4 – CMP0 Compare Channel 0 Interrupt Enable
Writing CMPn bit to '1' enables compare interrupt from channel n.

Bit 0 – OVF Timer Overflow/Underflow Interrupt Enable
Writing OVF bit to '1' enables overflow interrupt.

20.5.11 Interrupt Flag Register - Normal Mode

Name: INTFLAGS
Offset: 0x0B
Reset: 0x00
Property: -

The individual status bit can be cleared by writing a '1'e to its bit location. This allows each bit to be set without use of a read-modify-write operation on a single register.

Bit	7	6	5	4	3	2	1	0
		CMP2	CMP1	CMP0				OVF
Access		R/W	R/W	R/W				R/W
Reset		0	0	0				0

Bit 6 – CMP2 Compare Channel 2 Interrupt Flag
See CMP0 flag description.

Bit 5 – CMP1 Compare Channel 1 Interrupt Flag
See CMP0 flag description.

Bit 4 – CMP0 Compare Channel 0 Interrupt Flag
The compare interrupt flag (CMPn) is set on a compare match on the corresponding compare channel.
For all modes of operation, the CMPn flag will be set when a compare match occurs between the count register (CNT) and the corresponding compare register (CMPn). The CMPn flag will not be cleared automatically and has to be cleared by software. This is done by writing a one to its bit location.

Bit 0 – OVF Overflow/Underflow Interrupt Flag
This flag is set either on a TOP (overflow) or BOTTOM (underflow) condition, depending on the WGMODE setting.
OVF is not automatically cleared and needs to be cleared by software. This is done by writing a one to its bit location.

20.5.12 Debug Control Register

Name: DBGCTRL
Offset: 0x0E
Reset: 0x00
Property: -

Bit	7	6	5	4	3	2	1	0
								DBGRUN
Access								R/W
Reset								0

Bit 0 – DBGRUN Run in Debug

Value	Description
0	The peripheral is halted in break debug mode and ignores events.
1	The peripheral will continue to run in break debug mode when the CPU is halted.

20.5.13 Temporary bits for 16-bit Access

Name: TEMP
Offset: 0x0F
Reset: 0x00
Property: -

The Temporary register is used by the CPU for single-cycle, 16-bit access to the 16-bit registers of this peripheral. It can also be read and written by software. See also 8.5.6 Accessing 16-bit Registers. There is one common Temporary register for all the 16-bit registers of this peripheral.

Bit	7	6	5	4	3	2	1	0
	TEMP[7:0]							
Access	R/W	R/W	R/W	R/W	R/W	R/W	R/W	R/W
Reset	0	0	0	0	0	0	0	0

Bits 7:0 – TEMP[7:0] Temporary Bits for 16-bit Access

20.5.14 Counter Register - Normal Mode

Name: CNT
Offset: 0x20
Reset: 0x00
Property: -

The TCA.CNTL and TCA.CNTH register pair represents the 16-bit value, TCA.CNT. The low byte [7:0] (suffix L) is accessible at the original offset. The high byte [15:8] (suffix H) can be accessed at offset + 0x01. For more details on reading and writing 16-bit registers, refer to 8.5.6 Accessing 16-bit Registers.

CPU and UPDI write access has priority over internal updates of the register.

Bit	15	14	13	12	11	10	9	8
	CNT[15:8]							
Access	R/W	R/W	R/W	R/W	R/W	R/W	R/W	R/W
Reset	0	0	0	0	0	0	0	0

Bit	7	6	5	4	3	2	1	0
	CNT[7:0]							
Access	R/W	R/W	R/W	R/W	R/W	R/W	R/W	R/W
Reset	0	0	0	0	0	0	0	0

Bits 15:8 – CNT[15:8] Counter high byte
These bits hold the MSB of the 16-bit counter register.

Bits 7:0 – CNT[7:0] Counter low byte
These bits hold the LSB of the 16-bit counter register.

20.5.15 Period Register - Normal Mode

Name: PER
Offset: 0x26
Reset: 0xFFFF
Property: -

TCA.PER contains the 16-bit TOP value in the timer/counter.

The TCA.PERL and TCA.PERH register pair represents the 16-bit value, TCA.PER. The low byte [7:0] (suffix L) is accessible at the original offset. The high byte [15:8] (suffix H) can be accessed at offset + 0x01. For more details on reading and writing 16-bit registers, refer to 8.5.6 Accessing 16-bit Registers.

Bit	15	14	13	12	11	10	9	8
	PER[15:8]							
Access	R/W	R/W	R/W	R/W	R/W	R/W	R/W	R/W
Reset	1	1	1	1	1	1	1	1

Bit	7	6	5	4	3	2	1	0
	PER[7:0]							
Access	R/W	R/W	R/W	R/W	R/W	R/W	R/W	R/W
Reset	1	1	1	1	1	1	1	1

Bits 15:8 – PER[15:8] Periodic high byte
These bits hold the MSB of the 16-bit period register.

Bits 7:0 – PER[7:0] Periodic low byte
These bits hold the LSB of the 16-bit period register.

20.5.16 Compare n Register - Normal Mode

Name: CMPn
Offset: 0x28 + n*0x02 [n=0..2]
Reset: 0x00
Property: -

This register is continuously compared to the counter value. Normally, the outputs from the comparators are then used for generating waveforms.

TCA.CMPn registers are updated with the buffer value from their corresponding CMPnBUF register when an UPDATE condition occurs.

The TCA.CMPnL and TCA.CMPnH register pair represents the 16-bit value, TCA.CMPn. The low byte [7:0] (suffix L) is accessible at the original offset. The high byte [15:8] (suffix H) can be accessed at offset + 0x01. For more details on reading and writing 16-bit registers, refer to 8.5.6 Accessing 16-bit Registers.

Bit	15	14	13	12	11	10	9	8
	CMP[15:8]							
Access	R/W	R/W	R/W	R/W	R/W	R/W	R/W	R/W
Reset	0	0	0	0	0	0	0	0

Bit	7	6	5	4	3	2	1	0
	CMP[7:0]							
Access	R/W	R/W	R/W	R/W	R/W	R/W	R/W	R/W
Reset	0	0	0	0	0	0	0	0

Bits 15:8 – CMP[15:8] Compare high byte
These bits hold the MSB of the 16-bit compare register.

Bits 7:0 – CMP[7:0] Compare low byte
These bits hold the LSB of the 16-bit compare register.

20.5.17 Period Buffer Register

Name: PERBUF
Offset: 0x36
Reset: 0xFFFF
Property: -

This register serves as the buffer for the period register (TCA.PER). Accessing this register using the CPU or UPDI will affect the PERBV flag.

The TCA.PERBUFL and TCA.PERBUFH register pair represents the 16-bit value, TCA.PERBUF. The low byte [7:0] (suffix L) is accessible at the original offset. The high byte [15:8] (suffix H) can be accessed at offset + 0x01. For more details on reading and writing 16-bit registers, refer to 8.5.6 Accessing 16-bit Registers.

Bit	15	14	13	12	11	10	9	8
	PERBUF[15:8]							
Access	R/W	R/W	R/W	R/W	R/W	R/W	R/W	R/W
Reset	1	1	1	1	1	1	1	1

Bit	7	6	5	4	3	2	1	0
	PERBUF[7:0]							
Access	R/W	R/W	R/W	R/W	R/W	R/W	R/W	R/W
Reset	1	1	1	1	1	1	1	1

Bits 15:8 – PERBUF[15:8] Period Buffer high byte
These bits hold the MSB of the 16-bit period buffer register.

Bits 7:0 – PERBUF[7:0] Period Buffer low byte
These bits hold the LSB of the 16-bit period buffer register.

20.5.18 Compare n Buffer Register

Name: CMPBUF
Offset: 0x38 + n*0x02 [n=0..2]
Reset: 0x00
Property: -

This register serves as the buffer for the associated compare registers (TCA.CMPn). Accessing any of these registers using the CPU or UPDI will affect the corresponding CMPnBV status bit.

The TCA.CMPnBUFL and TCA.CMPnBUFH register pair represents the 16-bit value, TCA.CMPnBUF. The low byte [7:0] (suffix L) is accessible at the original offset. The high byte [15:8] (suffix H) can be accessed at offset + 0x01. For more details on reading and writing 16-bit registers, refer to 8.5.6 Accessing 16-bit Registers.

Bit	15	14	13	12	11	10	9	8
	CMPBUF[15:8]							
Access	R/W	R/W	R/W	R/W	R/W	R/W	R/W	R/W
Reset	0	0	0	0	0	0	0	0

Bit	7	6	5	4	3	2	1	0
	CMPBUF[7:0]							
Access	R/W	R/W	R/W	R/W	R/W	R/W	R/W	R/W
Reset	0	0	0	0	0	0	0	0

Bits 15:8 – CMPBUF[15:8] Compare high byte
These bits hold the MSB of the 16-bit compare buffer register.

Bits 7:0 – CMPBUF[7:0] Compare low byte
These bits hold the LSB of the 16-bit compare buffer register.

20.6 Register Summary - TCA in Split Mode (CTRLD.SPLITM=1)

Offset	Name	Bit Pos.								
0x00	CTRLA	7:0					CLKSEL[2:0]			ENABLE
0x01	CTRLB	7:0		HCMP2EN	HCMP1EN	HCMP0EN		LCMP2EN	LCMP1EN	LCMP0EN
0x02	CTRLC	7:0		HCMP2OV	HCMP1OV	HCMP0OV		LCMP2OV	LCMP1OV	LCMP0OV
0x03	CTRLD	7:0								SPLITM
0x04	CTRLECLR	7:0					CMD[1:0]			
0x05	CTRLESET	7:0					CMD[1:0]			
0x06 ... 0x09	Reserved									
0x0A	INTCTRL	7:0		LCMP2	LCMP1	LCMP0			HUNF	LUNF
0x0B	INTFLAGS	7:0		LCMP2	LCMP1	LCMP0			HUNF	LUNF
0x0C ... 0x0D	Reserved									
0x0E	DBGCTRL	7:0								DBGRUN
0x0F ... 0x1F	Reserved									
0x20	LCNT	7:0	LCNT[7:0]							
0x21	HCNT	7:0	HCNT[7:0]							
0x22 ... 0x25	Reserved									
0x26	LPER	7:0	LPER[7:0]							
0x27	HPER	7:0	HPER[7:0]							
0x28	LCMP0	7:0	LCMP[7:0]							
0x29	HCMP0	7:0	HCMP[7:0]							
0x2A	LCMP1	7:0	LCMP[7:0]							
0x2B	HCMP1	7:0	HCMP[7:0]							
0x2C	LCMP2	7:0	LCMP[7:0]							
0x2D	HCMP2	7:0	HCMP[7:0]							

20.7 Register Description - Split Mode

20.7.1 Control A

Name: CTRLA
Offset: 0x00
Reset: 0x00
Property: -

Bit	7	6	5	4	3	2	1	0
					CLKSEL[2:0]			ENABLE
Access					R/W	R/W	R/W	R/W
Reset					0	0	0	0

Bits 3:1 – CLKSEL[2:0] Clock Select
These bits select the clock frequency for the timer/counter.

Value	Name	Description
0x0	DIV1	$f_{TCA} = f_{CLK_PER}/1$
0x1	DIV2	$f_{TCA} = f_{CLK_PER}/2$
0x2	DIV4	$f_{TCA} = f_{CLK_PER}/4$
0x3	DIV8	$f_{TCA} = f_{CLK_PER}/8$
0x4	DIV16	$f_{TCA} = f_{CLK_PER}/16$
0x5	DIV64	$f_{TCA} = f_{CLK_PER}/64$
0x6	DIV256	$f_{TCA} = f_{CLK_PER}/256$
0x7	DIV1024	$f_{TCA} = f_{CLK_PER}/1024$

Bit 0 – ENABLE Enable

Value	Description
0	The peripheral is disabled
1	The peripheral is enabled

20.7.2 Control B - Split Mode

Name: CTRLB
Offset: 0x01
Reset: 0x00
Property: -

Bit	7	6	5	4	3	2	1	0
		HCMP2EN	HCMP1EN	HCMP0EN		LCMP2EN	LCMP1EN	LCMP0EN
Access		R/W	R/W	R/W		R/W	R/W	R/W
Reset		0	0	0		0	0	0

Bit 6 – HCMP2EN High-byte Compare 2 Enable
See LCMP0EN.

Bit 5 – HCMP1EN High-byte Compare 1 Enable
See LCMP0EN.

Bit 4 – HCMP0EN High-byte Compare 0 Enable
See LCMP0EN.

Bit 2 – LCMP2EN Low-byte Compare 2 Enable
See LCMP0EN.

Bit 1 – LCMP1EN Low-byte Compare 1 Enable
See LCMP0EN.

Bit 0 – LCMP0EN Low-byte Compare 0 Enable
Setting the LCMPnEN/HCMPnEN bits in the FRQ or PWM waveform generation mode of operation will override the port output register for the corresponding WOn pin.

20.7.3 Control C - Split Mode

Name: CTRLC
Offset: 0x02
Reset: 0x00
Property: -

Bit	7	6	5	4	3	2	1	0
		HCMP2OV	HCMP1OV	HCMP0OV		LCMP2OV	LCMP1OV	LCMP0OV
Access		R/W	R/W	R/W		R/W	R/W	R/W
Reset		0	0	0		0	0	0

Bit 6 – HCMP2OV High-byte Compare 2 Output Value
See LCMP0OV.

Bit 5 – HCMP1OV High-byte Compare 1 Output Value
See LCMP0OV.

Bit 4 – HCMP0OV High-byte Compare 0 Output Value
See LCMP0OV.

Bit 2 – LCMP2OV Low-byte Compare 2 Output Value
See LCMP0OV.

Bit 1 – LCMP1OV Low-byte Compare 1 Output Value
See LCMP0OV.

Bit 0 – LCMP0OV Low-byte Compare 0 Output Value
The LCMPnOV/HCMPn bits allow direct access to the waveform generator's output compare value when the timer/counter is not enabled. This is used to set or clear the WOn output value when the timer/counter is not running.

20.7.4 Control D

Name: CTRLD
Offset: 0x03
Reset: 0x00
Property: -

Bit	7	6	5	4	3	2	1	0
								SPLITM
Access								R/W
Reset								0

Bit 0 – SPLITM Enable Split Mode
This bit sets the timer/counter in split mode operation. It will then work as two 8-bit timer/counters. The register map will change compared to normal 16-bit mode.

20.7.5 Control Register E Clear - Split Mode

Name: CTRLECLR
Offset: 0x04
Reset: 0x00
Property: -

The individual status bit can be cleared by writing a '1' to its bit location. This allows each bit to be cleared without use of a read-modify-write operation on a single register.
Each Status bit can be read out either by reading TCA.CTRLESET or TCA.CTRLECLR.

Bit	7	6	5	4	3	2	1	0
					CMD[1:0]			
Access					R/W	R/W		
Reset					0	0		

Bits 3:2 – CMD[1:0] Command
These bits are used for software control of update, restart, and reset of the timer/counter. The command bits are always read as zero.

Value	Name	Description
0x0	NONE	No command
0x1	UPDATE	Force update
0x2	RESTART	Force restart
0x3	RESET	Force hard Reset (ignored if TC is enabled)

20.7.6 Control Register E Set - Split Mode

Name: CTRLESET
Offset: 0x05
Reset: 0x00
Property: -

The individual status bit can be set by writing a '1' to its bit location. This allows each bit to be set without use of a read-modify-write operation on a single register.
Each Status bit can be read out either by reading TCA.CTRLESET or TCA.CTRLECLR.

Bit	7	6	5	4	3	2	1	0
					CMD[1:0]			
Access					R/W	R/W		
Reset					0	0		

Bits 3:2 – CMD[1:0] Command
These bits are used for software control of update, restart, and reset of the timer/counter. The command bits are always read as zero.

Value	Name	Description
0x0	NONE	No command
0x1	UPDATE	Force update
0x2	RESTART	Force restart
0x3	RESET	Force hard Reset (ignored if TC is enabled)

20.7.7 Interrupt Control Register - Split Mode

Name: INTCTRL
Offset: 0x0A
Reset: 0x00
Property: -

Bit	7	6	5	4	3	2	1	0
		LCMP2	LCMP1	LCMP0			HUNF	LUNF
Access		R/W	R/W	R/W			R/W	R/W
Reset		0	0	0			0	0

Bit 6 – LCMP2 Low-byte Compare Channel 0 Interrupt Enable
See LCMP0.

Bit 5 – LCMP1 Low-byte Compare Channel 1 Interrupt Enable
See LCMP0.

Bit 4 – LCMP0 Low-byte Compare Channel 0 Interrupt Enable
Writing LCMPn bit to '1' enables low-byte compare interrupt from channel n.

Bit 1 – HUNF High-byte Underflow Interrupt Enable
Writing HUNF bit to '1' enables high-byte underflow interrupt.

Bit 0 – LUNF Low-byte Underflow Interrupt Enable
Writing HUNF bit to '1' enables low-byte underflow interrupt.

20.7.8 Interrupt Flag Register - Split Mode

Name: INTFLAGS
Offset: 0x0B
Reset: 0x00
Property: -

The individual status bit can be cleared by writing a '1' to its bit location. This allows each bit to be set without use of a read-modify-write operation on a single register.

Bit	7	6	5	4	3	2	1	0
		LCMP2	LCMP1	LCMP0			HUNF	LUNF
Access		R/W	R/W	R/W			R/W	R/W
Reset		0	0	0			0	0

Bit 6 – LCMP2 Low-byte Compare Channel 0 Interrupt Flag
See LCMP0 flag description.

Bit 5 – LCMP1 Low-byte Compare Channel 0 Interrupt Flag
See LCMP0 flag description.

Bit 4 – LCMP0 Low-byte Compare Channel 0 Interrupt Flag
The compare interrupt flag (LCMPn) is set on a compare match on the corresponding compare channel.
For all modes of operation, the LCMPn flag will be set when a compare match occurs between the Low-byte count register (LCNT) and the corresponding compare register (LCMPn). The LCMPn flag will not be cleared automatically and has to be cleared by software. This is done by writing a '1' to its bit location.

Bit 1 – HUNF High-byte Underflow Interrupt Flag
This flag is set on a high-byte timer BOTTOM (underflow) condition. HUNF is not automatically cleared and needs to be cleared by software. This is done by writing a '1' to its bit location.

Bit 0 – LUNF Low-byte Underflow Interrupt Flag
This flag is set on a low-byte timer BOTTOM (underflow) condition. LUNF is not automatically cleared and needs to be cleared by software. This is done by writing a '1' to its bit location.

20.7.9 Debug Control Register

Name: DBGCTRL
Offset: 0x0E
Reset: 0x00
Property: -

Bit	7	6	5	4	3	2	1	0
								DBGRUN
Access								R/W
Reset								0

Bit 0 – DBGRUN Run in Debug

Value	Description
0	The peripheral is halted in break debug mode and ignores events.
1	The peripheral will continue to run in break debug mode when the CPU is halted.

20.7.10 Low-byte Timer Counter Register - Split Mode

Name: LCNT
Offset: 0x20
Reset: 0x00
Property: -

TCA.LCNT contains the counter value in low-byte timer. CPU and UPDI write access has priority over count, clear, or reload of the counter.

Bit	7	6	5	4	3	2	1	0
	LCNT[7:0]							
Access	R/W	R/W	R/W	R/W	R/W	R/W	R/W	R/W
Reset	0	0	0	0	0	0	0	0

Bits 7:0 – LCNT[7:0] Counter value for low-byte timer
These bits define the counter value of the low-byte timer.

20.7.11 High-byte Timer Counter Register - Split Mode

Name: HCNT
Offset: 0x21
Reset: 0x00
Property: -

TCA.HCNT contains the counter value in high-byte timer. CPU and UPDI write access has priority over count, clear, or reload of the counter.

Bit	7	6	5	4	3	2	1	0
	HCNT[7:0]							
Access	R/W	R/W	R/W	R/W	R/W	R/W	R/W	R/W
Reset	0	0	0	0	0	0	0	0

Bits 7:0 – HCNT[7:0] Counter value for high-byte timer
These bits define the counter value in high-byte timer.

20.7.12 Low-byte Timer Period Register - Split Mode

Name: LPER
Offset: 0x26
Reset: 0x00
Property: -

The TCA.LPER register contains the TOP value of low-byte timer.

Bit	7	6	5	4	3	2	1	0
	LPER[7:0]							
Access	R/W	R/W	R/W	R/W	R/W	R/W	R/W	R/W
Reset	1	1	1	1	1	1	1	1

Bits 7:0 – LPER[7:0] Period value low-byte timer
These bits hold the TOP value of low-byte timer.

20.7.13 High-byte Period Register - Split Mode

Name: HPER
Offset: 0x27
Reset: 0x00
Property: -

The TCA.HPER register contains the TOP value of high-byte timer.

Bit	7	6	5	4	3	2	1	0
	HPER[7:0]							
Access	R/W	R/W	R/W	R/W	R/W	R/W	R/W	R/W
Reset	1	1	1	1	1	1	1	1

Bits 7:0 – HPER[7:0] Period value high-byte timer
These bits hold the TOP value of high-byte timer.

20.7.14 Compare Register n for low-byte Timer - Split Mode

Name: LCMP
Offset: 0x28 + n*0x02 [n=0..2]
Reset: 0x00
Property: -

The TCA.LCMPn register represents the compare value of compare channel n for low-byte Timer. This register is continuously compared to the counter value of low-byte timer, LCNT. Normally, the outputs from the comparators are then used for generating waveforms.

Bit	7	6	5	4	3	2	1	0
	LCMP[7:0]							
Access	R/W	R/W	R/W	R/W	R/W	R/W	R/W	R/W
Reset	0	0	0	0	0	0	0	0

Bits 7:0 – LCMP[7:0] Compare value of channel n
These bits hold the compare value of channel n that is compared to LCNT.

20.7.15 High-byte Compare Register n - Split Mode

Name: HCMP
Offset: 0x29 + n*0x02 [n=0..2]
Reset: 0x00
Property: -

The TCA.HCMPn register represents the compare value of compare channel n for high-byte Timer. This register is continuously compared to the counter value of high-byte timer, HCNT. Normally, the outputs from the comparators are then used for generating waveforms.

Bit	7	6	5	4	3	2	1	0
	HCMP[7:0]							
Access	R/W	R/W	R/W	R/W	R/W	R/W	R/W	R/W
Reset	0	0	0	0	0	0	0	0

Bits 7:0 – HCMP[7:0] Compare value of channel n
These bits hold the compare value of channel n that is compared to HCNT.

21. TCB - 16-bit Timer/Counter Type B

21.1 Features

- 16-bit counter operation modes:
  - Periodic interrupt
  - Timeout check
  - Input capture
    - On event
    - Frequency measurement
    - Pulse width measurement
    - Frequency and pulse width measurement
  - Single shot
  - 8-bit Pulse Width Modulation (PWM)
- Noise canceler on event input
- Optional: Operation synchronous with TCA0

21.2 Overview

The capabilities of the 16-bit Timer/Counter type B (TCB) include frequency and waveform generation, and input capture on Event with time and frequency measurement of digital signals. The TCB consists of a base counter and control logic which can be set in one of eight different modes, each mode providing unique functionality. The base counter is clocked by the peripheral clock with optional prescaling.

21.2.1 Block Diagram

Figure 21-1. Timer/Counter Type B Block Diagram

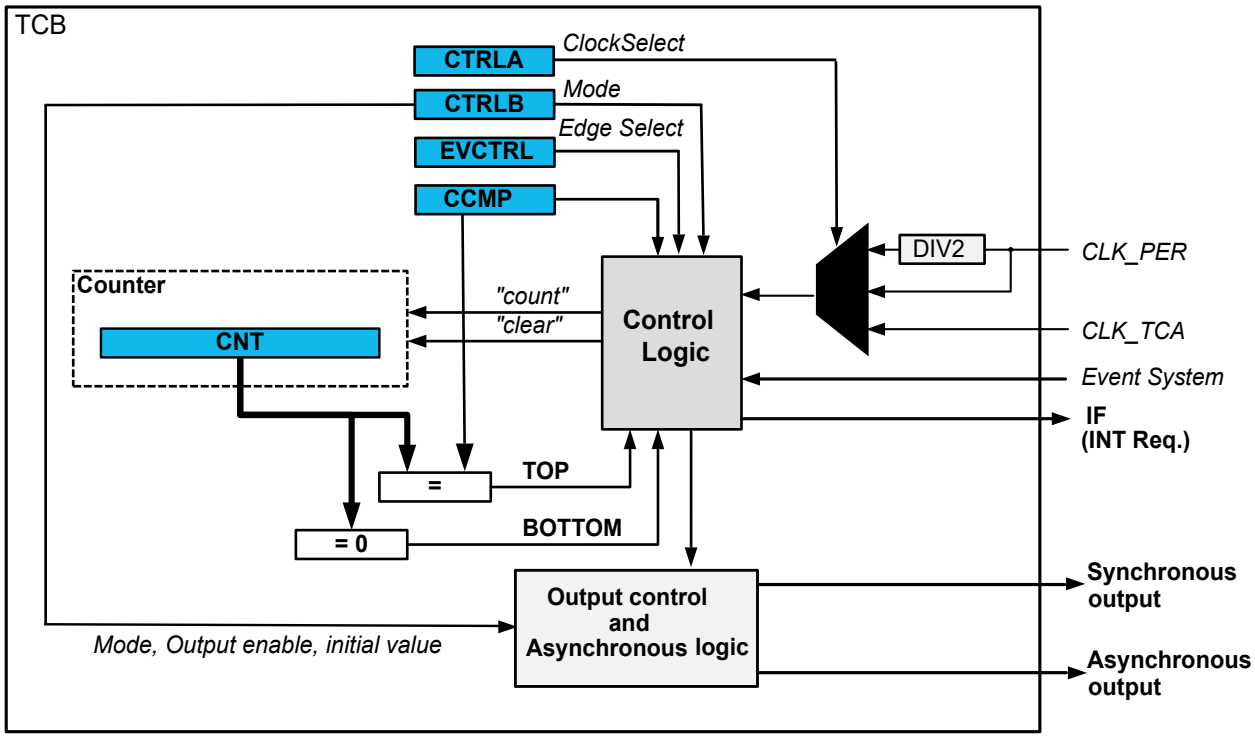

21.2.1.1 Noise Canceler

The noise canceler improves noise immunity by using a simple digital filter scheme. When the noise filter is enabled the peripheral monitors the event channel and keeps a record of the last four observed samples. If four consecutive samples are equal, the input is considered to be stable and the signal is fed to the edge detector.

When enabled, the noise canceler introduces an additional delay of four system clock cycles between a change applied to the input and the update of the input compare register.

The noise canceler uses the system clock and is therefore not affected by the prescaler.

21.2.2 Signal Description

Signal	Description	Type
WO	Digital asynchronous output	Waveform Output

Related Links

5. I/O Multiplexing and Considerations

21.2.3 System Dependencies

In order to use this peripheral, other parts of the system must be configured correctly, as described below.

Table 21-1. TCB System Dependencies

Dependency	Applicable	Peripheral
Clocks	Yes	CLKCTRL
I/O Lines and Connections	Yes	WO
Interrupts	Yes	CPUINT

.....continued		
Dependency	**Applicable**	**Peripheral**
Events	Yes	EVSYS
Debug	Yes	UPDI

Related Links
21.2.3.1 Clocks
21.2.3.5 Debug Operation
21.2.3.3 Interrupts
21.2.3.4 Events

21.2.3.1 Clocks

This peripheral uses the system's peripheral clock CLK_PER. The peripheral has its own local prescaler, or can be configured to run off the prescaled clock signal of the Timer Counter type A (TCA).

Related Links
10. CLKCTRL - Clock Controller

21.2.3.2 I/O Lines and Connections

Using the I/O lines of the peripheral requires configuration of the I/O pins.

Related Links
5. I/O Multiplexing and Considerations
16. PORT - I/O Pin Configuration

21.2.3.3 Interrupts

Using the interrupts of this peripheral requires the Interrupt Controller to be configured first.

Related Links
13. CPUINT - CPU Interrupt Controller
8.7.3 SREG
21.3.5 Interrupts

21.2.3.4 Events

The events of this peripheral are connected to the Event System.

Related Links
14. EVSYS - Event System

21.2.3.5 Debug Operation

When the CPU is halted in debug mode, this peripheral will halt normal operation. This peripheral can be forced to continue operation during debugging.

This peripheral can be forced to operate with halted CPU by writing a '1' to the Debug Run bit (DBGRUN) in the Debug Control register of the peripheral (*peripheral*.DBGCTRL).

Related Links
33. UPDI - Unified Program and Debug Interface

21.3 Functional Description

21.3.1 Definitions

The following definitions are used throughout the documentation:

Table 21-2. Timer/Counter Definitions

Name	Description
BOTTOM	The counter reaches BOTTOM when it becomes zero.
MAX	The counter reaches MAXimum when it becomes all ones.
TOP	The counter reaches TOP when it becomes equal to the highest value in the count sequence.
UPDATE	The update condition is met when the timer/counter reaches BOTTOM or TOP, depending on the waveform generator mode.
CNT	Counter register value
CCMP	Capture/Compare register value

In general, the term “timer” is used when the timer/counter is counting periodic clock ticks. The term “counter” is used when the input signal has sporadic or irregular ticks.

21.3.2 Initialization

By default the TCB is in Periodic Interrupt mode. Follow these steps to start using it:

- Write a TOP value to the Compare/Capture register (TCB.CCMP).
- Enable the counter by writing a '1' to the ENABLE bit in the Control A register (TCB.CTRLA).
  The counter will start counting clock ticks according to the prescaler setting in the Clock Select bit field (CLKSEL in TCB.CTRLA).
- The counter value can be read from the Count register (TCB.CNT). The peripheral will generate an interrupt when the CNT value reaches TOP.

21.3.3 Operation

21.3.3.1 Modes

The timer can be configured to run in one of the eight different modes listed below. The event pulse needs to be longer than one system clock cycle in order to guarantee edge detection.

21.3.3.1.1 Periodic Interrupt Mode

In the periodic interrupt mode the counter counts to the capture value and restarts from zero. Interrupt is generated when counter is equal to TOP. If TOP is updated to a value lower than count, the counter will continue until MAX and wrap around without generating an interrupt.

Figure 21-2. Periodic Interrupt Mode

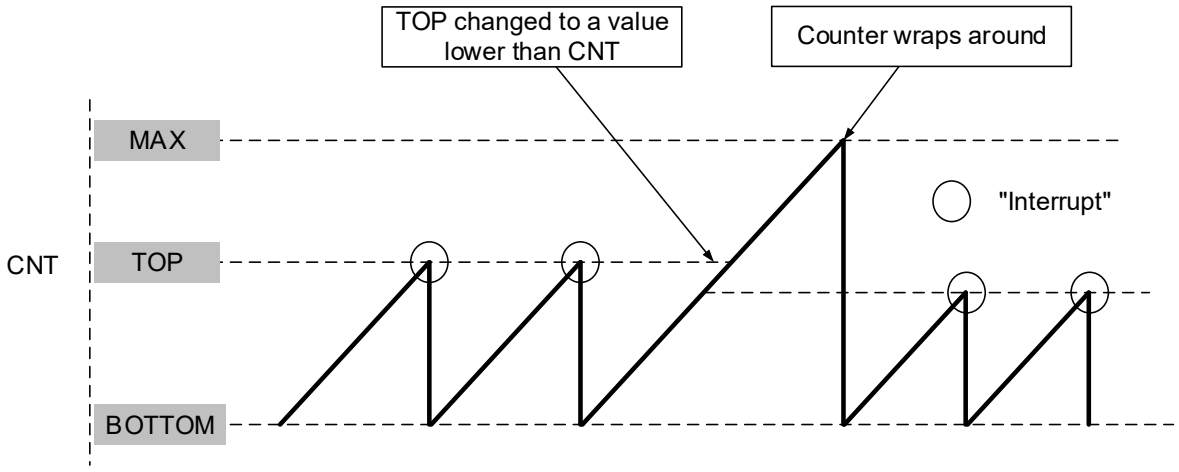

21.3.3.1.2 Timeout Check Mode

In this mode, the counter counts to MAX and wraps around. On the first edge the counter is restarted and on the second edge the counter is stopped. If the count register (TCB.CNT) reaches TOP before the second edge, an interrupt will be generated. In freeze state, the counter will restart on a new edge. Reading count (TCB.CNT) or compare/capture (TCB.CCMP) register, or writing run bit (RUN in TCB.STATUS) in freeze state will have no effect.

Figure 21-3. Timeout Check Mode

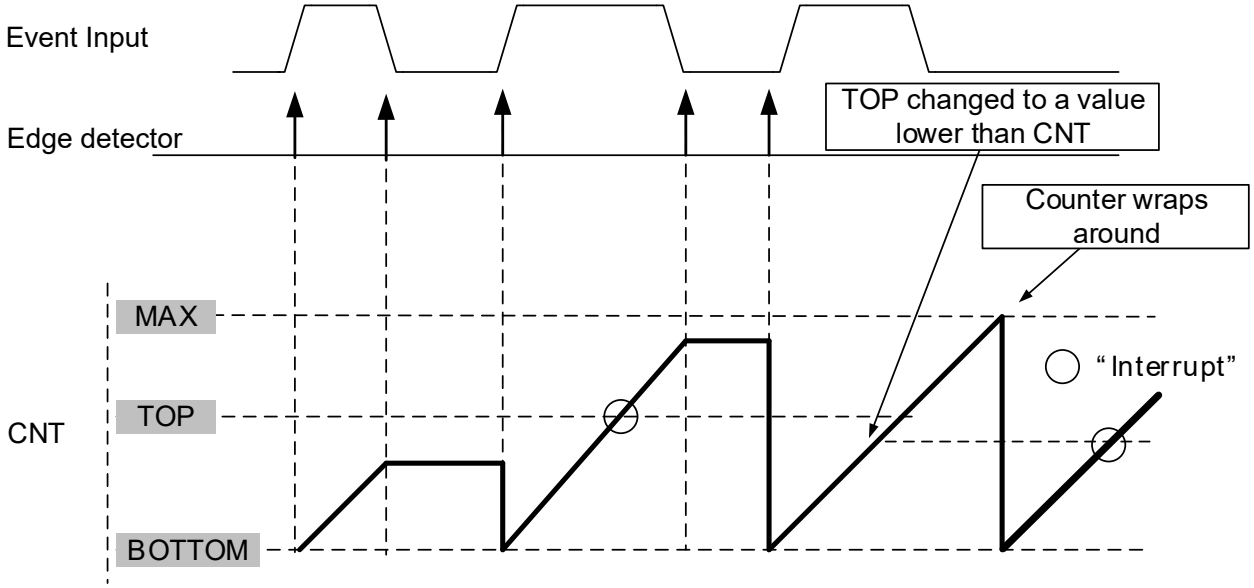

21.3.3.1.3 Input Capture on Event Mode

The counter will count from BOTTOM to MAX continuously. When an event is detected the counter value will be transferred to the Compare/Capture register (TCB.CCMP) and interrupt is generated. The module has an edge detector which can be configured to trigger count capture on either rising or falling edges.

The figure below shows the input capture unit configured to capture on falling edge on the event input signal. The interrupt flag is automatically cleared after the high byte of the capture register has been read.

Figure 21-4. Input Capture on Event

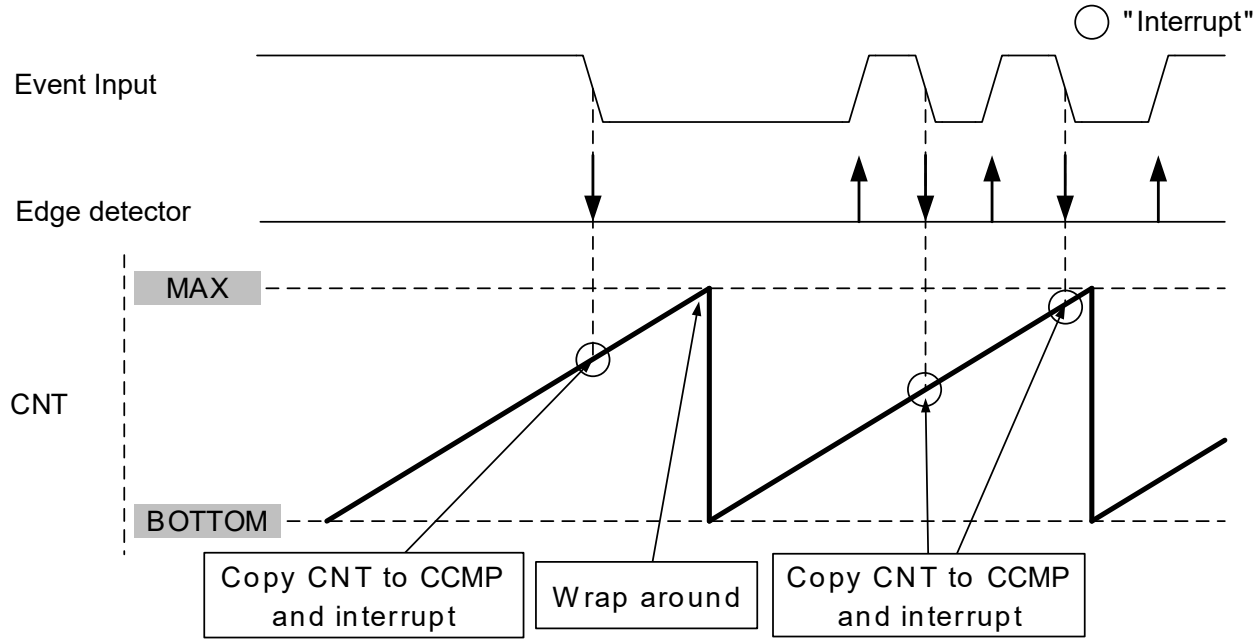

It is recommended to write zero to the TCB.CNT register when entering this mode from any other mode.

21.3.3.1.4 Input Capture Frequency Measurement Mode

In this mode, the TCB captures the counter value and restarts on either a positive or negative edge of the event input signal.

The interrupt flag is automatically cleared after the high byte of the Compare/Capture register (TCB.CCMP) has been read, and an interrupt request is generated.

The figure below illustrates this mode when configured to act on rising edge.

Figure 21-5. Input Capture Frequency Measurement

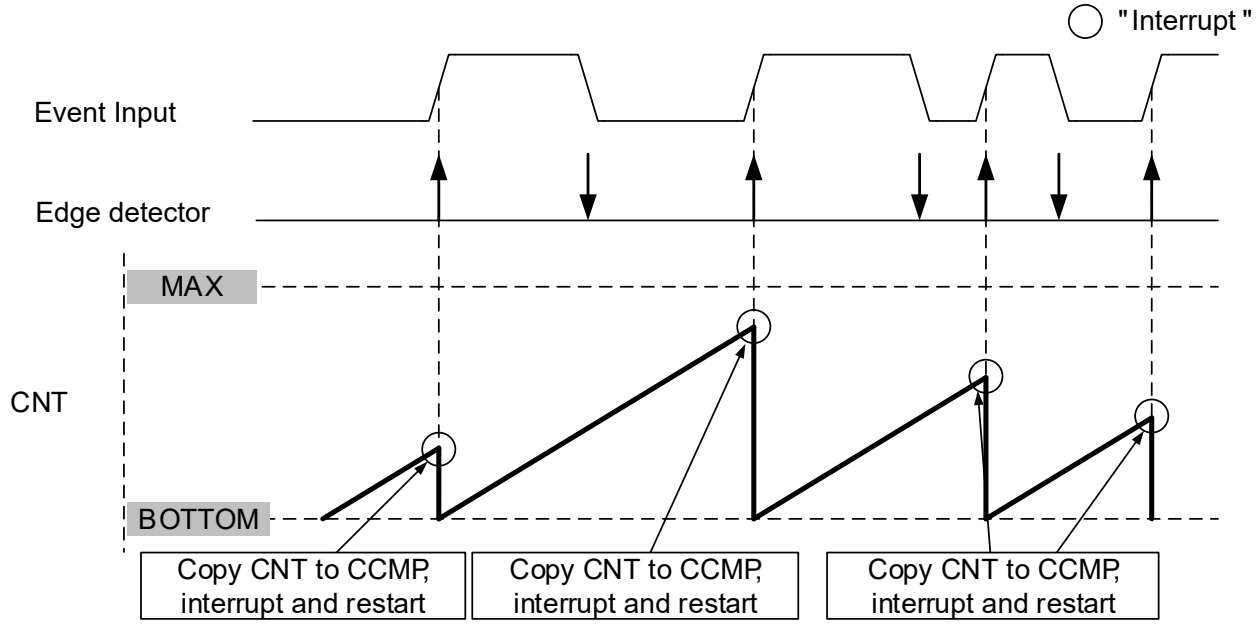

21.3.3.1.5 Input Capture Pulse Width Measurement Mode

The input capture pulse width measurement will restart the counter on a positive edge and capture on the next falling edge before an interrupt request is generated. The interrupt flag is automatically cleared when the high byte of the

capture register is read. The timer will automatically switch between rising and falling edge detection, but a minimum edge separation of two clock cycles is required for correct behavior.

Figure 21-6. Input Capture Pulse Width Measurement

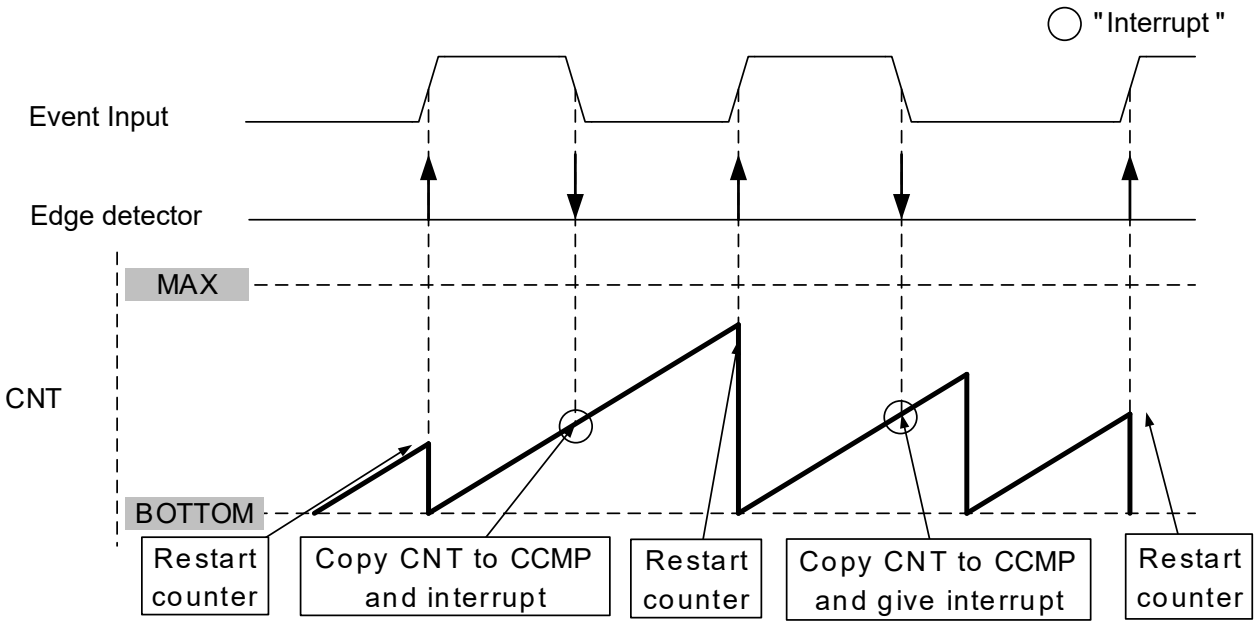

21.3.3.1.6 Input Capture Frequency and Pulse Width Measurement Mode

In this mode, the timer will start counting when a positive edge is detected on the even input signal. On the following falling edge, the count value is captured. The counter stops when the second rising edge of the event input signal is detected. This will also set the interrupt flag.

Reading the capture will clear the interrupt flag. When the capture register is read or the interrupt flag is cleared the TC is ready for a new capture sequence. The counter register should therefor be read before the capture register as this is reset to zero at the next positive edge.

Figure 21-7. Input Capture Frequency and Pulse Width Measurement

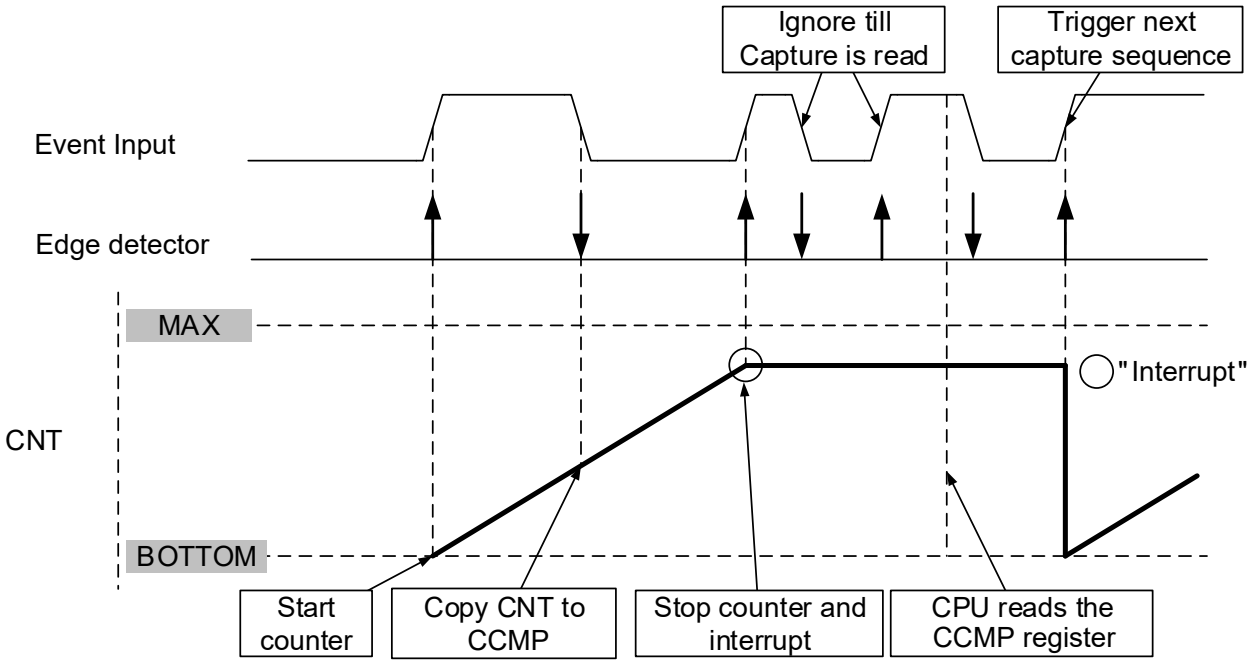

21.3.3.1.7 Single Shot Mode

This mode can be used to generate a pulse with a duration that is defined by the Compare register (TCB.CCMP), every time a rising or falling edge is observed on a connected event channel.

When the counter is stopped, the output pin is driven to low. If an event is detected on the connected event channel, the timer will reset and start counting from zero to TOP while driving its output high. The RUN bit in the Status register can be read to see if the counter is counting or not. When the counter register reaches the CCMP register value, counter will stop and the output pin will go low for at least one prescaler cycle. If a new event arrives during this time, that event will be ignored. The following figure shows an example waveform. There is a two clock cycle delay from when the event is received until the output is set high. If the ASYNC bit in TCB.CTRLB is written to '1', an asynchronous edge detector is used for input events to give immediate action. When the EDGE bit of the TCB.EVCTRL register is written to '1', any edge can trigger the start of counter. If the EDGE bit is '0', only positive edges will trigger the start.

The counter will start as soon as the module is enabled, even without triggering event. This is prevented by writing TOP to the counter register.

Similar behavior is seen if the EDGE bit in the TCB.EVCTRL register is '1' while the module is enabled. Writing TOP to the Counter register prevents this as well.

It is not recommended to change configuration while the module is enabled.

Figure 21-8. Single-Shot Mode

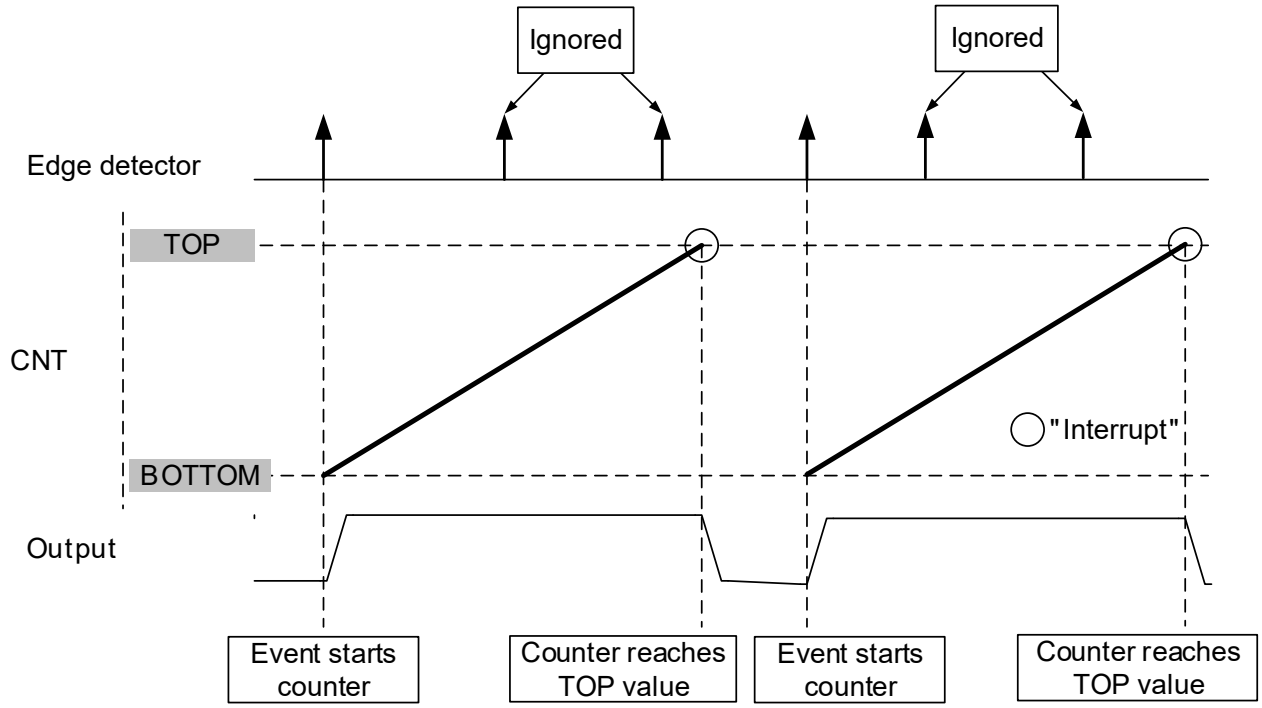

If the ASYNC bit in TCB.CTRLB is '0', the event pulse needs to be longer than one system clock cycle in order to guarantee edge detection.

21.3.3.1.8 8-bit PWM Mode

This timer can also be configured to run in 8-bit PWM mode where each of the register pairs in the 16-bit compare/capture register (TCB.CCMPH and TCB.CCMPL) are used as individual compare registers. The counter will continuously count from zero to CCMPL and the output will be set at BOTTOM and cleared when the counter reaches CCMPH.

When this peripheral is enabled and in PWM mode, changing the value of the compare/capture register will change the output, but the transition may output invalid values. It is hence recommended to

1. Disable the peripheral
2. Write compare/capture register to {CCMPH, CCMPL}
3. Write 0x0000 to count register

4. Re-enable the module.

CCMPH is the number of cycles for which the output will be driven high, CCMPL+1 is the period of the output pulse.

Output of the module for different capture register values are explained below.

- CCMPL = 0 ⇒ Output = 0
- CCMPL = 0xFF
  - CCMPH = 0 ⇒ Output = 0
  - 0 < CCMPH ≤ 0xFF ⇒ Output = 1 for CCMPH cycles, low for the rest of the period
- For 0 < CCMPL < 0xFF
  - CCMPH = 0 ⇒ Output = 0
  - If 0 < CCMPH ≤ CCL ⇒ Output = 1 for CCMPH cycles, low for the rest
  - CCMPH = CCMPL + 1 ⇒ Output = 1

Figure 21-9. 8-bit PWM Mode

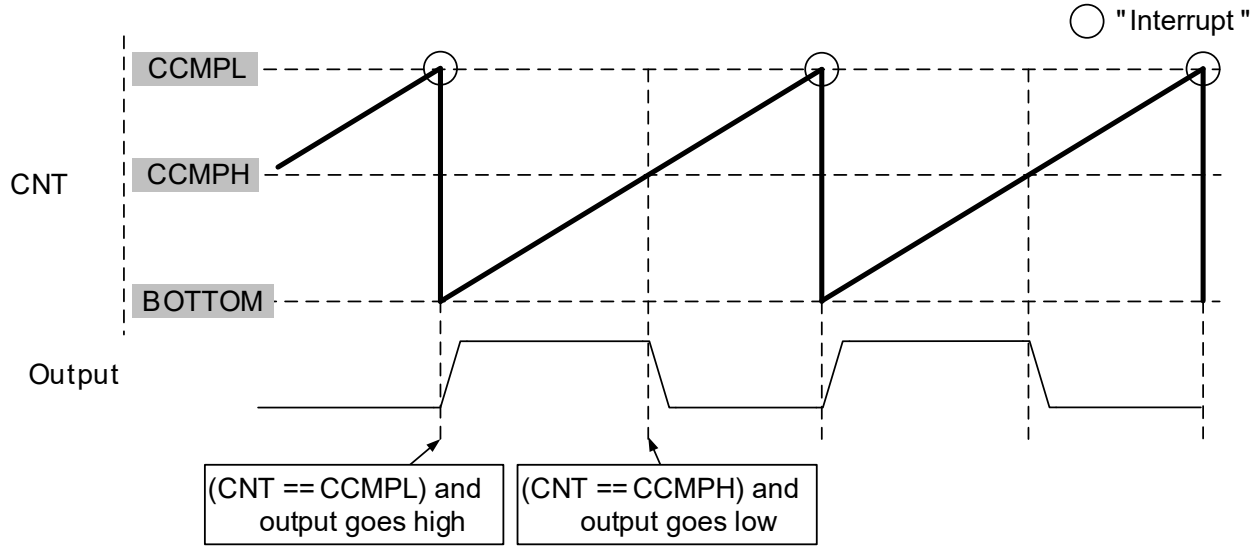

21.3.3.2 Output

If ASYNC in TCB.CTRLB is written to '0' ('1'), the output pin is driven synchronously (asynchronously) to the TCB clock. The bits CCMPINIT, CCMPEN, and CNTMODE in TCB.CTRLB control how the synchronous output is driven. The bits CCMPINIT, CCMPEN, and CNTMODE in TCB.CTRLB control how the synchronous output is driven. The different configurations and their impact on the output is listen in the table below.

Table 21-3. Synchronous Output

CNTMODE	Output, CTRLB='0', CCMPEN=1	Output, CTRLB='1', CCMPEN=1
Single shot mode	Output high when counter starts and output low when counter stops	Output high when event arrives and output low when counter stops
8-bit PWM mode	PWM mode output	PWM mode output
Modes except single shot and PWM	Bit CCMPINIT in TCB.CTRLB	Bit CCMPINIT in TCB.CTRLB

21.3.3.3 Noise Canceler

The noise canceler improves noise immunity by using a simple digital filter scheme. When the noise filter is enabled the peripheral monitors the event channel and keeps a record of the last four observed samples. If four consecutive samples are equal, the input is considered to be stable and the signal is fed to the edge detector.

When enabled, the noise canceler introduces an additional delay of four system clock cycles between a change applied to the input and the update of the input compare register.

The noise canceler uses the system clock and is therefore not affected by the prescaler.

21.3.3.4 Synchronized with TCA0

The TCB can be configured to use the clock (CLK_TCA) of the Timer/Counter type A (TCA0) by writing 0x2 to the Clock Select bit field (CLKSEL) in the Control A register (TCB.CTRLA). In this setting the TCB will count either on the prescaled clock signal from TCA0 which is configured by CLKSEL in TCA.CTRLA, or event clocking for TCA configured by EVACT in TCA.EVCTRL. Event clocking from TCA0 is only used if enable count on event (CNTEI) is set to '1' in TCA.EVCTRL.

When the Synchronize Update bit (SYNCUPD) in the Control A register (TCB.CTRLA) is written to '1', the TCB counter will restart when the TCA0 counter restarts.

Related Links

21.2.1 Block Diagram

21.3.4 Events

If TCB is connected to the Event System as an event generator, the TCB will generate a strobe on the connected event channel when the configured event condition is met.

The peripheral accepts one event input. If the Capture Event Input Enable bit (CAPTEI) in the Event Control register (TCB.EVCTRL) is written to '1', incoming events will result in an event action as defined by the Event Edge bit (EDGE) in TCB.EVCTRL. A change on event line needs to be held for at least on system clock cycle to guarantee action on event except single shot mode.

Related Links

21.5.3 EVCTRL

14. EVSYS - Event System

21.3.5 Interrupts

Table 21-4. Available Interrupt Vectors and Sources

Offset	Name	Vector Description	Conditions
0x00	CAPT	TCB interrupt	Depending on operating mode. See description of CAPT in TCB.INTFLAG.

When an interrupt condition occurs, the corresponding Interrupt Flag is set in the Interrupt Flags register of the peripheral (*peripheral*.INTFLAGS).

An interrupt source is enabled or disabled by writing to the corresponding enable bit in the peripheral's Interrupt Control register (*peripheral*.INTCTRL).

An interrupt request is generated when the corresponding interrupt source is enabled and the Interrupt Flag is set. The interrupt request remains active until the Interrupt Flag is cleared. See the peripheral's INTFLAGS register for details on how to clear Interrupt Flags.

Related Links

13. CPUINT - CPU Interrupt Controller

21.5.5 INTFLAGS

21.3.6 Sleep Mode Operation

TCB will halt operation in the Power Down Sleep mode. Standby sleep operation is dependent on the Run in Standby bit (RUNSTDBY) in the Control A register (TCB.CTRLA).

21.3.7 Synchronization

Not applicable.

21.3.8 Configuration Change Protection

Not applicable.

21.4 Register Summary - TCB

Offset	Name	Bit Pos.								
0x00	CTRLA	7:0		RUNSTDBY		SYNCUPD		CLKSEL[1:0]		ENABLE
0x01	CTRLB	7:0		ASYNC	CCMPINIT	CCMPEN		CNTMODE[2:0]		
0x02 ... 0x03	Reserved									
0x04	EVCTRL	7:0		FILTER		EDGE				CAPTEI
0x05	INTCTRL	7:0								CAPT
0x06	INTFLAGS	7:0								CAPT
0x07	STATUS	7:0								RUN
0x08	DBGCTRL	7:0								DBGRUN
0x09	TEMP	7:0	TEMP[7:0]							
0x0A	CNT	7:0	CNT[7:0]							
		15:8	CNT[15:8]							
0x0C	CCMP	7:0	CCMP[7:0]							
		15:8	CCMP[15:8]							

21.5 Register Description

21.5.1 Control A

Name: CTRLA
Offset: 0x00
Reset: 0x00
Property: -

Bit	7	6	5	4	3	2	1	0
		RUNSTDBY		SYNCUPD		CLKSEL[1:0]		ENABLE
Access		R/W		R/W		R/W	R/W	R/W
Reset		0		0		0	0	0

Bit 6 – RUNSTDBY Run Standby
Writing a '1' to this bit will enable the peripheral to run in Standby sleep mode. Not applicable when CLKSEL is set to 0x2 (CLK_TCA).

Bit 4 – SYNCUPD Synchronize Update
When this bit is written to '1', the TCB will restart whenever the TCA0 is restarted.

Bits 2:1 – CLKSEL[1:0] Clock Select
Writing these bits selects the clock source for this peripheral.

Value	Description
0x0	CLK_PER
0x1	CLK_PER / 2
0x2	Use CLK_TCA from TCA0
0x3	Reserved

Bit 0 – ENABLE Enable
Writing this bit to '1' enables the Timer/Counter type B peripheral.

21.5.2 Control B

Name: CTRLB
Offset: 0x01
Reset: 0x00
Property: -

Bit	7	6	5	4	3	2	1	0
		ASYNC	CCMPINIT	CCMPEN		CNTMODE[2:0]		
Access		R/W	R/W	R/W		R/W	R/W	R/W
Reset		0	0	0		0	0	0

Bit 6 – ASYNC Asynchronous Enable
Writing this bit to '1' will allow asynchronous updates of the TCB output signal in single shot mode

Value	Description
0	The output will go HIGH when the counter actually starts
1	The output will go HIGH when an Event arrives

Bit 5 – CCMPINIT Compare/Capture Pin Initial Value
This bit is used to set the initial output value of the pin when a pin output is used.

Value	Description
0	Initial pin state is LOW
1	Initial pin state is HIGH

Bit 4 – CCMPEN Compare/Capture Output Enable
This bit is used to set the output value of the Compare/Capture Output.

Value	Description
0	Compare/Capture Output is zero
1	Compare/Capture Output has a valid value

Bits 2:0 – CNTMODE[2:0] Timer Mode
Writing these bits selects the timer mode.

Value	Description
0x0	Periodic interrupt mode
0x1	Timeout check mode
0x2	Input capture on event mode
0x3	Input capture frequency measurement mode
0x4	Input capture pulse width measurement mode
0x5	Input capture frequency and pulse width measurement mode
0x6	Single shot mode
0x7	8-bit PWM mode

21.5.3 Event Control

Name: EVCTRL
Offset: 0x04
Reset: 0x00
Property: -

Bit	7	6	5	4	3	2	1	0
		FILTER		EDGE				CAPTEI
Access		R/W		R/W				R/W
Reset		0		0				0

Bit 6 – FILTER Input Capture Noise Cancellation Filter
Writing this bit to '1' enables the input capture noise cancellation unit.

Bit 4 – EDGE Event Edge
This bit is used to select the Event edge. The effect of this bit is dependent on the selected Count Mode (CNTMODE) in TCB.CTRLB.

Count Mode	EDGE	Positive Edge	Negative Edge
Periodic Interrupt Mode	0	Not Applicable	Not Applicable
	1	Not Applicable	Not Applicable
Timeout Check Mode	0	Start counter	Stop counter
	1	Stop counter	Start counter
Input Capture on Event Mode	0	Input capture frequency and pulse width measurement mode	Not Applicable
	1	Not Applicable	Capture = count
Input Capture Frequency Measurement Mode	0	Capture = count, initialize, interrupt	Not Applicable
	1	Not Applicable	Capture = count, initialize, interrupt
Input Capture Pulse Width Measurement Mode	0	Initialize	Capture = count, interrupt
	1	Capture = count, interrupt	Initialize
Input Capture Frequency and Pulse Width Measurement Mode	0	On 1st Positive: initialize On following Negative: capture 2nd Positive: stop, interrupt	
	1	On 1st Negative: initialize On following Positive: capture 2nd Negative: stop, interrupt	
Single Shot Mode	0	Start counter	Not Applicable
	1	Start counter	Start counter
8-bit PWM Mode	0	Not Applicable	Not Applicable
	1	Not Applicable	Not Applicable

Bit 0 – CAPTEI Capture Event Input Enable
Writing this bit to '1' enables the event input capture.

21.5.4 Interrupt Control

Name: INTCTRL
Offset: 0x05
Reset: 0x00
Property: -

Bit	7	6	5	4	3	2	1	0
								CAPT
Access								R/W
Reset								0

Bit 0 – CAPT Capture Interrupt Enable
Writing this bit to '1' enables the Capture interrupt.

21.5.5 Interrupt Flags

Name: INTFLAGS
Offset: 0x06
Reset: 0x00
Property: -

Bit	7	6	5	4	3	2	1	0
								CAPT
Access								R/W
Reset								0

Bit 0 – CAPT Interrupt Flag
This bit is set when an interrupt occurs. The interrupt conditions are dependent on the Counter mode (CNTMODE) in TCB.CTRLB.
This bit is cleared by writing a '1' to it or when the Capture register is read in capture mode.

Counter Mode	Interrupt Set Condition
Periodic Interrupt Mode	Set when the counter reaches TOP
Timeout Check Mode	Set when the counter reaches TOP
Input Capture on Event Mode	Set when an event occurs and the capture register is loaded, Flag clears when capture is read
Input Capture Frequency Measurement Mode	Set on edge when the capture register is loaded and count initialized, Flag clears when capture is read
Input Capture Pulse Width Measurement Mode	Set on a edge when the capture register is loaded, previous edge initialized the count, Flag clears when capture is read
Input Capture Frequency and Pulse Width Measurement Mode	Set on second (positive or negative) edge when the counter is stopped, Flag clears when capture is read
Single Shot Mode	Set when counter reaches TOP
8-bit PWM Mode	Set when the counter reaches CCH

21.5.6 Status

Name: STATUS
Offset: 0x07
Reset: 0x00
Property: -

Bit	7	6	5	4	3	2	1	0
								RUN
Access								R
Reset								0

Bit 0 – RUN Run
When the counter is running, this bit is set to '1'. When the counter is stopped, this bit is cleared '0'.
The bit it is read only and cannot be set by UPDI.

21.5.7 Debug Control

Name: DBGCTRL
Offset: 0x08
Reset: 0x00
Property: -

Bit	7	6	5	4	3	2	1	0
								DBGRUN
Access								R/W
Reset								0

Bit 0 – DBGRUN Debug Run

Value	Description
0	The peripheral is halted in break debug mode and ignores events.
1	The peripheral will continue to run in break debug mode when the CPU is halted.

21.5.8 Temporary Value

Name: TEMP
Offset: 0x09
Reset: 0x00
Property: -

The Temporary register is used by the CPU for single-cycle, 16-bit access to the 16-bit registers of this peripheral. It can also be read and written by software. See also 8.5.6 Accessing 16-bit Registers. There is one common Temporary register for all the 16-bit registers of this peripheral.

Bit	7	6	5	4	3	2	1	0
	TEMP[7:0]							
Access	R/W	R/W	R/W	R/W	R/W	R/W	R/W	R/W
Reset	0	0	0	0	0	0	0	0

Bits 7:0 – TEMP[7:0] Temporary Value

21.5.9 Count

Name: CNT
Offset: 0x0A
Reset: 0x00
Property: -

The TCB.CNTL and TCB.CNTH register pair represents the 16-bit value TCB.CNT. The low byte [7:0] (suffix L) is accessible at the original offset. The high byte [15:8] (suffix H) can be accessed at offset + 0x01. For more details on reading and writing 16-bit registers, refer to 8.5.6 Accessing 16-bit Registers.

CPU and UPDI write access has priority over internal updates of the register.

Bit	15	14	13	12	11	10	9	8
	CNT[15:8]							
Access	R/W	R/W	R/W	R/W	R/W	R/W	R/W	R/W
Reset	0	0	0	0	0	0	0	0

Bit	7	6	5	4	3	2	1	0
	CNT[7:0]							
Access	R/W	R/W	R/W	R/W	R/W	R/W	R/W	R/W
Reset	0	0	0	0	0	0	0	0

Bits 15:8 – CNT[15:8] Count Value high
These bits hold the MSB of the 16-bit counter register.

Bits 7:0 – CNT[7:0] Count Value low
These bits hold the LSB of the 16-bit counter register.

21.5.10 Capture/Compare

Name: CCMP
Offset: 0x0C
Reset: 0x00
Property: -

The TCB.CCMPL and TCB.CCMPH register pair represents the 16-bit value TCB.CCMP. The low byte [7:0] (suffix L) is accessible at the original offset. The high byte [15:8] (suffix H) can be accessed at offset + 0x01. For more details on reading and writing 16-bit registers, refer to 8.5.6 Accessing 16-bit Registers.

This register has different functions depending on the mode of operation:

- For capture operation, these registers contain the captured value of the counter at the time the capture occurs
- In periodic interrupt/timeout and single shot mode this register acts as the TOP value.
- In 8-bit PWM mode, TCB.CCMPL and TCB.CCMPH act as two independent registers.

Bit	15	14	13	12	11	10	9	8
	CCMP[15:8]							
Access	R/W	R/W	R/W	R/W	R/W	R/W	R/W	R/W
Reset	0	0	0	0	0	0	0	0

Bit	7	6	5	4	3	2	1	0
	CCMP[7:0]							
Access	R/W	R/W	R/W	R/W	R/W	R/W	R/W	R/W
Reset	0	0	0	0	0	0	0	0

Bits 15:8 – CCMP[15:8] Capture/Compare Value high byte
These bits hold the MSB of the 16-bit compare, capture and top value

Bits 7:0 – CCMP[7:0] Capture/Compare Value low byte
These bits hold the LSB of the 16-bit compare, capture and top value

22. TCD - 12-bit Timer/Counter Type D

22.1 Features

- 12-bit timer/counter
- Programmable prescaler
- Double buffered compare registers
- Waveform generation
  - One ramp mode
  - Two ramp mode
  - Four ramp mode
  - Dual-slope mode
- Two separate input capture, double buffered
- Connection to event system
  - Programmable filter
- Conditional waveform on external events
  - Fault handling
  - Input blanking
  - Overload protection function
  - Fast emergency stop by hardware
- Supports both half bridge and full bridge output

22.2 Overview

The Timer/Counter type D (TCD) is a high performance waveform controller that consists of an asynchronous counter, a prescaler, compare logic, capture logic, and control logic. The purpose of the TCD is to control power applications like LED, motor control, H-bridge and power converters.

The TCD contains an counter that can run on a clock which is asynchronous from the system clock. It contains compare logic that can generate two independent outputs with optional dead time. It is connected to the event system for capture and deterministic fault control. The timer/counter can generate interrupts and events on compare match and overflow.

This device provides one instance of the TCD peripheral, TCD0.

22.2.1 Block Diagram

Figure 22-1. Timer/Counter Block Diagram

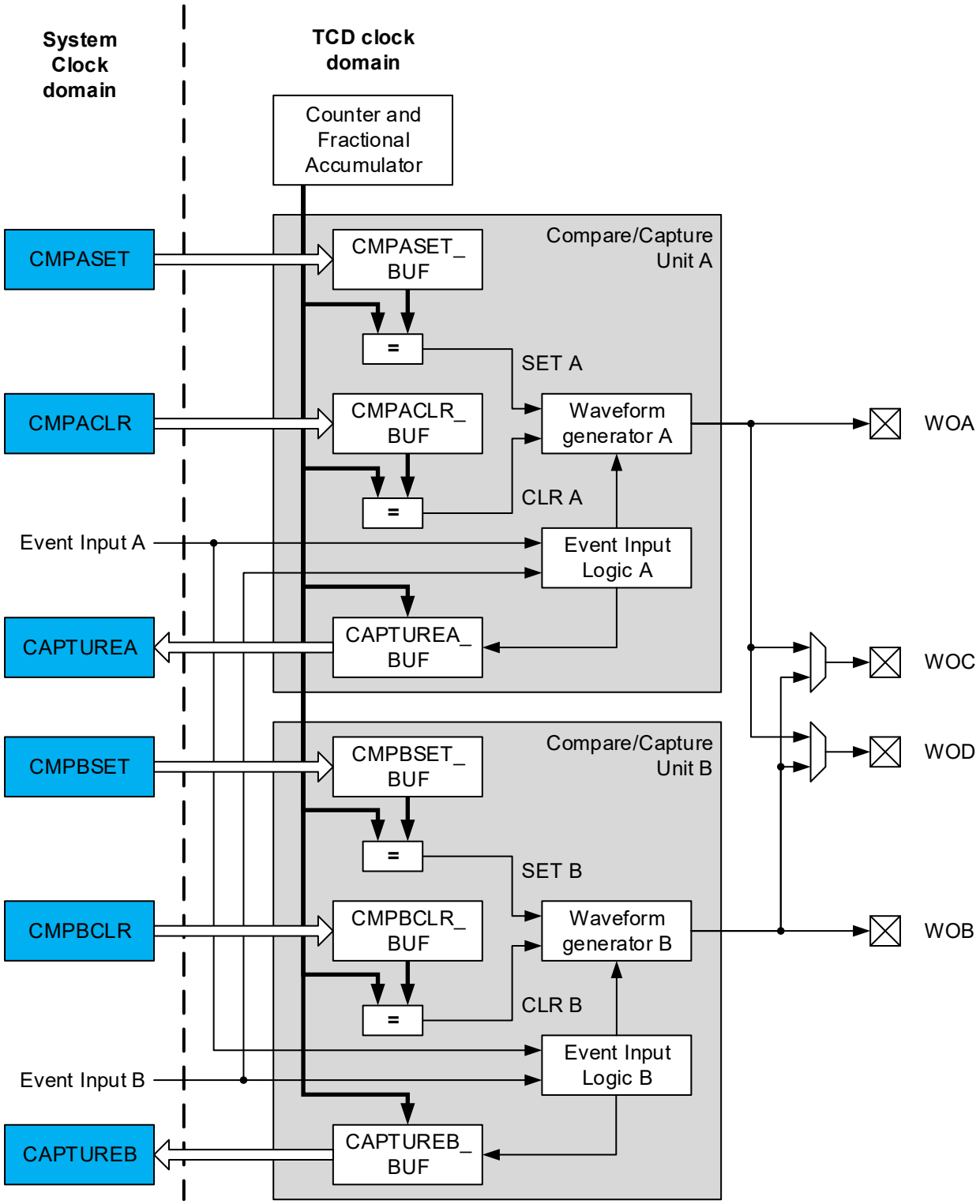

The TCD core is asynchronous to the system clock. The timer/counter consist of two compare/capture units, each with a separate waveform output. In addition there are two extra waveform outputs which can be equal to the output from one of the units. The compare registers CMPxSET, CMPxCLR are stored in the respective registers

(TCD.CMPxSET, TCD.CMPxCLR), which consist of both a low and a high byte. The registers are synchronized to the TCD domain after writing to the registers.

During normal operation, the counter value is continuously compared to the compare registers. This is used to generate both interrupts and events.

The TCD can use the input events in ten different input modes, selected separately for the two input events. The input mode defines how the input event will affect the outputs, and where in the TCD cycle the counter should go when an event occurs.

22.2.2 Signal Description

Signal	Description	Type
WOA	TCD waveform output A	Digital output
WOB	TCD waveform output B	Digital output
WOC	TCD waveform output C	Digital output
WOD	TCD waveform output D	Digital output

22.2.3 System Dependencies

In order to use this peripheral, other parts of the system must be configured correctly, as described below.

Table 22-1. TCD System Dependencies

Dependency	Applicable	Peripheral
Clocks	Yes	CLKCTRL
I/O Lines and Connections	Yes	WOA/B/C/D
Interrupts	Yes	CPUINT
Events	Yes	EVSYS
Debug	Yes	UPDI

Related Links

22.2.3.1 Clocks
22.2.3.5 Debug Operation
22.2.3.3 Interrupts
22.2.3.4 Events

22.2.3.1 Clocks

The TCD can be connected directly to the internal 16/20MHz RC Oscillator (OSC20M), to an external clock, or to the System clock. This is configured by the Clock Select bit field (CLKSEL) in the Control A register (TCD.CTRLA).

Related Links

10. CLKCTRL - Clock Controller

22.2.3.2 I/O Lines and Connections

Using the I/O lines of the peripheral requires configuration of the I/O pins.

Related Links

5. I/O Multiplexing and Considerations
16. PORT - I/O Pin Configuration

22.2.3.3 Interrupts

Using the interrupts of this peripheral requires the Interrupt Controller to be configured first.

Related Links

13. CPUINT - CPU Interrupt Controller
8.7.3 SREG
22.3.4 Interrupts

22.2.3.4 Events

The events of this peripheral are connected to the Event System.

Related Links

14. EVSYS - Event System

22.2.3.5 Debug Operation

When run-time debugging, this peripheral will continue normal operation. Halting the CPU in debugging mode will halt normal operation of the peripheral.

This peripheral can be forced to operate with halted CPU by writing a '1' to the Debug Run bit (DBGRUN) in the Debug Control register of the peripheral (*peripheral*.DBGCTRL).

When the Fault Detection bit (FAULTDET in TCD.DBGCTRL) is written to '1' and the CPU is halted in debug mode, an event/fault is created on both input event channels. These events/faults will last as long as the break, and can serve as safeguard in Debug mode, e.g. by forcing external components off.

If the peripheral is configured to require periodical service by the CPU through interrupts or similar, improper operation or data loss may result during halted debugging.

Related Links

33. UPDI - Unified Program and Debug Interface

22.2.4 Definitions

The following definitions are used throughout the documentation:

Table 22-2. Timer/Counter definitions

Name	Description
TCD cycle	The sequence of four states that the counter need to go through before it has returned to the same position.
Input Blanking	Functionality to ignore event input for a programmable time in a selectable part of the TCD cycle.
Asynchronous output control	Allows the Event to override the output instantly when the Event occurs. It is used for handling non-recoverable faults.
One ramp	Counter is reset to zero once during a TCD cycle.
Two ramp	Counter is reset to zero two times during a TCD cycle.
Four ramp	Counter is reset to zero four times during a TCD cycle.
Dual ramp	Counter count both up and down between zero and selected top value.

22.3 Functional Description

22.3.1 Initialization and Disabling

To initialize the TCD:

1. Configure the static registers to the desired functionality.
2. Write desired initial values to the double-buffered registers.
3. Ensure that the Enable Ready bit (ENRDY) in the Status register (TCD.STATUS) is set to '1'.

4. Enable the TCD by writing a '1' to the ENABLE bit in the Control A register (TCD.CTRLA).

It is possible to disable the TCD in two different ways:

1. By writing a '0' to ENABLE in TCD.CTRLA. This disables the TCD instantly when synchronized to the TCD core domain.
2. By writing a '1' to the Disable at End of Cycle Strobe bit (DISEOC) in the Control E register (TCD.CTRLE). This disables the TCD at the end of the TCD cycle.

The bit fields in the TCD.CTRLA register are enable-protected, with exception of the ENABLE bit. They can only be written when ENABLE is written to '0' first.

Related Links

22.3.2.1 Register Synchronization Categories

22.3.2 Operation

22.3.2.1 Register Synchronization Categories

Most of the IO registers need to be synchronized to the asynchronous TCD core clock domain. This is done in different ways for different register categories:

- Command and Enable Control registers
- Doubled-buffered registers
- Static registers
- Normal IO and STATUS registers

See Table 22-3 for categorized registers.

Command and Enable Registers

Because of synchronization between the clock domains it is only possible to change the Enable bits while the Enable Ready bit (ENRDY) in the Status register (TCD.STATUS) is '1'.

The Control E register commands (TCD.CTRLE) are automatically synchronized to the TCD core domain when the TCD is enabled and as long as there not a synchronization ongoing already. Check in the Status register if the Command Ready bit (CCMDRDY) is '1' (TCD.STATUS) to ensure that it is possible to write a new command. TCD.CTRLE is a strobe register that will clear itself when the command is done.

The Control E register commands are:

- Synchronize at end of TCD cycle: synchronizes all doubled buffered registers to TCD clock domain at the end of the TCD cycle
- Synchronize: synchronized all doubled buffered registers to TCD clock domain when the command is synchronized to TCD clock domain
- Restart: Restarts the TCD counter
- Software Capture A: Capture TCD counter value to TCD.CAPTUREA
- Software Capture B: Capture TCD counter value to TCD.CAPTUREB

Double-Buffered Registers

The doubled-buffered registers can be updated in normal IO writes while the TCD is enabled and no synchronization between the two clock domains is ongoing. Check that the CMDRDY bit in TCD.STATUS is '1' to ensure that it is possible to update the doubled buffered IO registers. The values will be synchronized to the TCD core domain when a synchronization command is sent or when the TCD is enabled.

Static Registers

The static registers are kept static whenever the TCD is enabled. That means that these registers must be configured before enabling the TCD. It is not possible to write to these registers as long as the TCD is enabled. To see if the TCD is enabled, check if ENABLE in TCD.CTRLA is reading '1'.

Normal IO and Status Registers

The read-only registers inform about synchronization status and values synchronized from the core domain. The reset of these registers and normal IO registers are not constrained by any synchronization between the domains.

Table 22-3. Categorization of Registers

Enable and Command registers	Doubled-buffered registers	Static registers	Read-only registers	Normal IO registers
TCD.CTRLA (ENABLE bit)	TCD.DLYCTRL	TCD.CTRLA (All bits Except ENABLE bit)	TCD.STATUS	TCD.INTCTRL
TCD.CTRLE	TCD.DLYVAL	TCD.CTRLB	TCD.CAPTUREA	TCD.INTFLAGS
	TCD.DITCTRL	TCD.CTRLC	TCD.CAPTUREB	
	TCD.DITVAL	TCD.CTRLD		
	TCD.DBGCTRL	TCD.EVCTRLA		
	TCD.CMPASET	TCD.EVCTRLB		
	TCD.CMPACLR	TCD.INPUTCTRLA		
	TCD.CMPBSET	TCD.INPUTCTRLB		
	TCD.CMPBCLR	TCD.FAULTCTRL		

22.3.2.2 Clock Selection and Prescalers

The TCD can select between 3 different clock sources that can be prescaled. There are three different prescalers with separate controls as shown below.

Figure 22-2. Clock Selection and Prescalers Overview

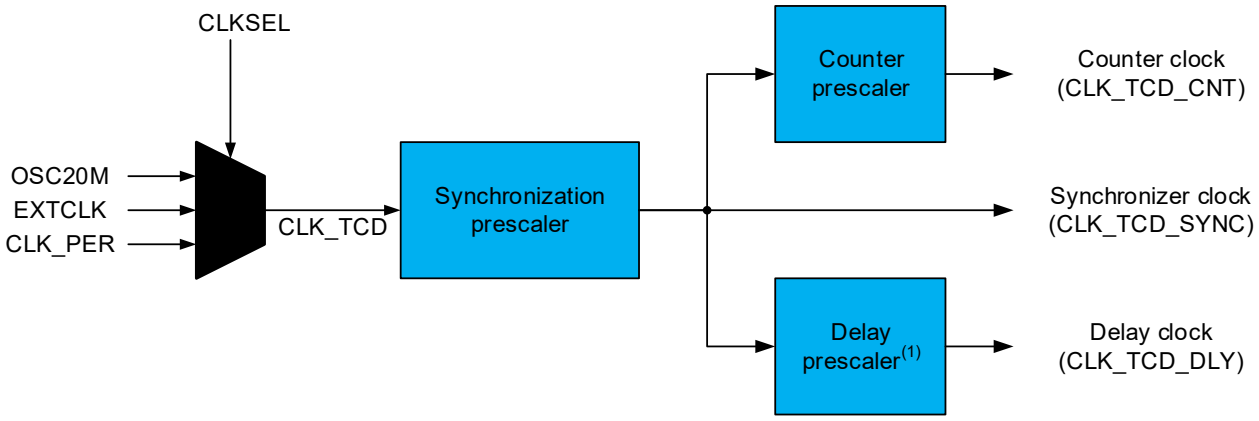

1. Used by input blanking/delay event out

The TCD synchronizer clock is separate from the other module clocks enabling faster synchronization between the TCD domain and the IO domain. The total prescalingfor the counter is:

$$SYNCPRESC_division_factor \times CNTPRESC_division_factor$$

The Delay prescaler is used to prescale the clock used for the input blanking/ delayed event output functionality. The prescaler can be configured independently allowing separate range and accuracy settings from the counter functionality.

22.3.2.3 Waveform Generation Modes

The TCD provides four different waveform generation modes. The waveform generation modes determine how the counter is counting during a TCD cycle, and when the compare values are matching. A TCD cycle is split into these states:

- Dead time WOA (DTA)
- On time WOA (OTA)
- Dead time WOB (DTB)
- On time WOB (OTB)

In a standard configuration all states are present in the order they are listed and they are non-overlapping. The compare values Compare A Set (TCD.CMPASET), Compare A Clear (TCD.CMPACLR), Compare B Set (TCD.CMPBSET) and Compare B Clear (TCD.CMPBCLR) defines when each of the states are ending and the next is beginning. There are four different ways to go through a TCD cycle. The different ways are called Waveform Generation Modes. They are controlled by the Waveform Generation Mode bits (WGMODE) in the Control A register (TCD.CTRLA). The waveform generation modes are:

- One Ramp mode
- Two Ramp mode
- Four Ramp mode
- Dual Slope mode

The name indicates how the counter is operating during one TCDcycle.

22.3.2.3.1 One Ramp Mode

In One Ramp Mode, TCD counter counts up until it reaches the CMPBCLR value. Then the TCD cycle is done and the counter restarts from 0x000, beginning a new TCD cycle. The TCD cycle period is

$$T_{\mathrm{TCD_cycle}} = \frac{(\mathrm{CMPBCLR} + 1)}{f_{\mathrm{CLK_TCD_CNT}}}$$

Figure 22-3. One Ramp Mode

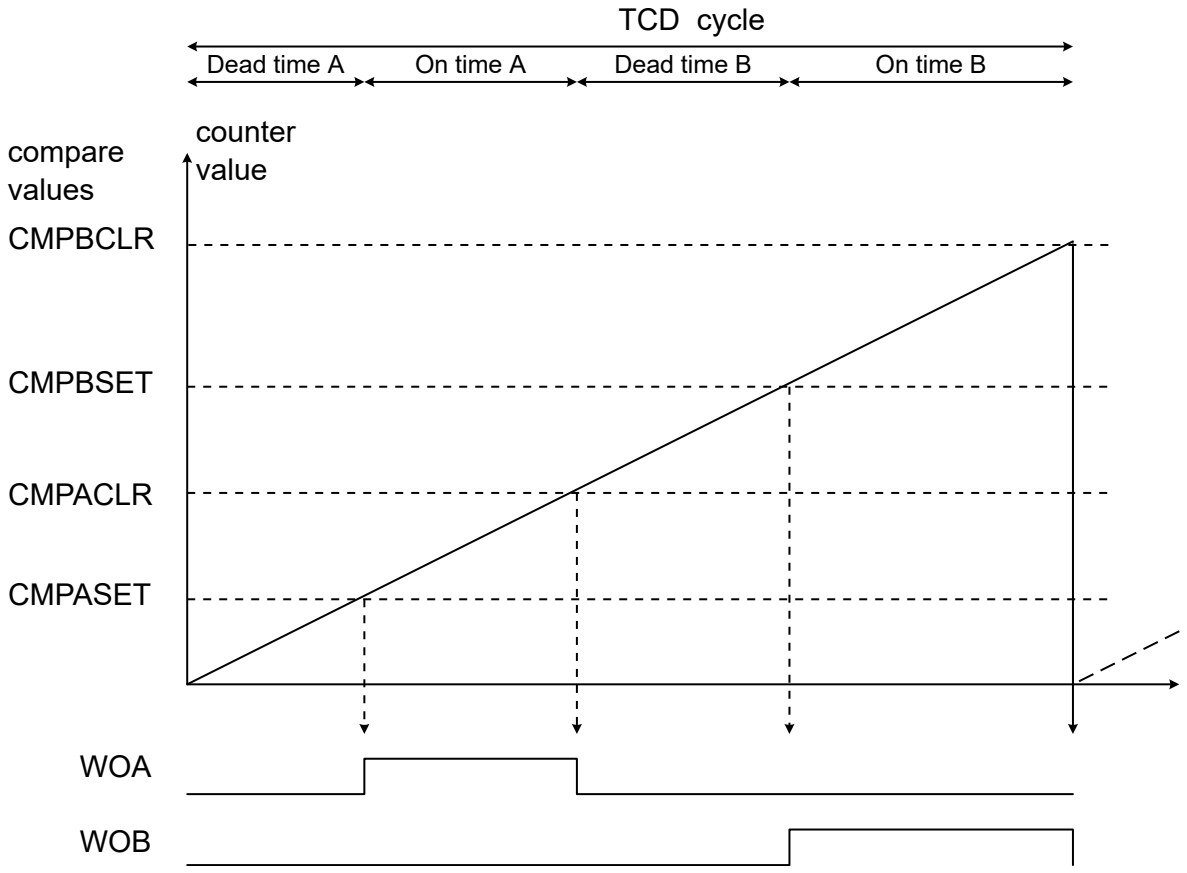

In the figure above, *CMPASET* < *CMPACLR* < *CMPBSET* < *CMPBCLR*. This is required in One Ramp Mode to avoid overlapping outputs. The figure below is an example where *CMPBSET* < *CMPASET* < *CMPACLR* < *CMPBCLR*, resulting in an overlap of the outputs.

Figure 22-4. One Ramp Mode with *CMPBSET* < *CMPASET*

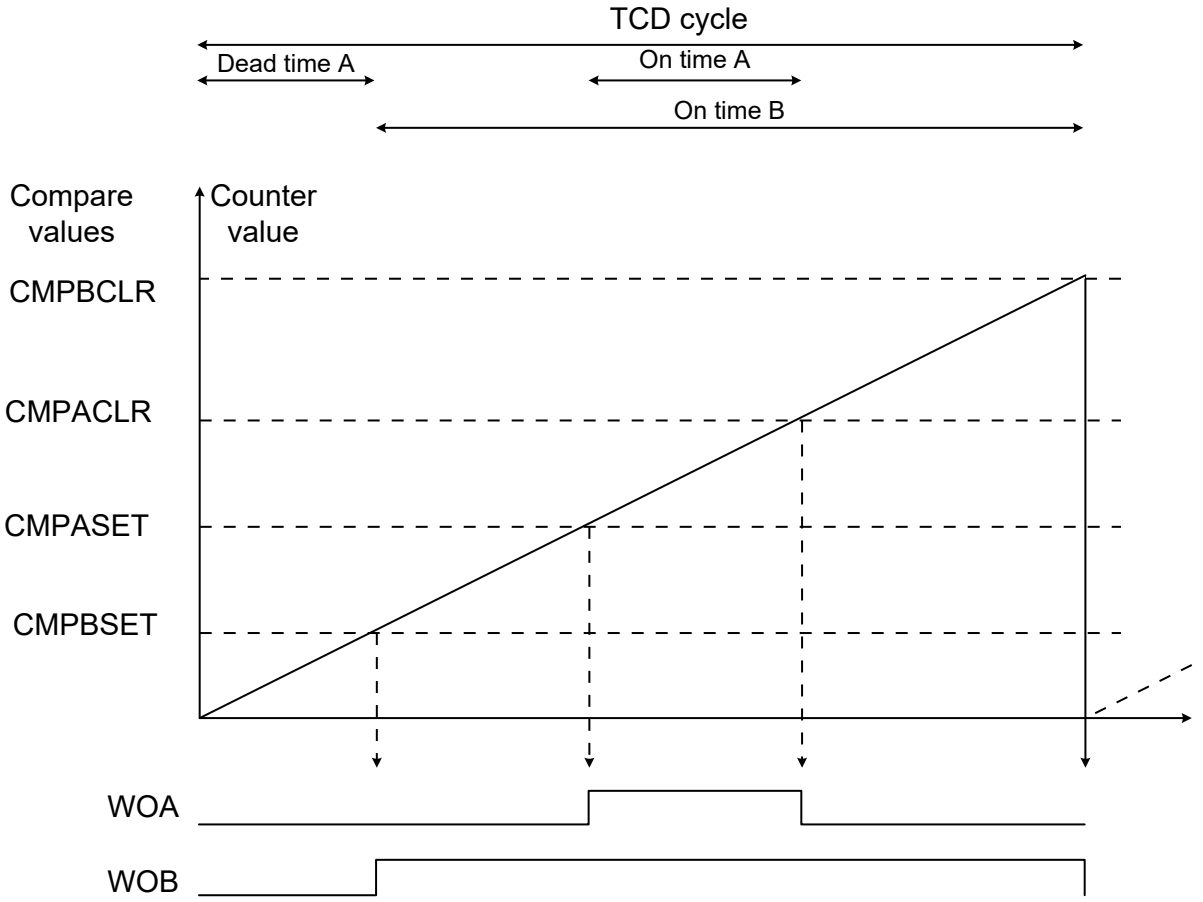

If any of the other compare values are bigger than CMPBCLR it will never be triggered when running in One ramp mode. And if The CMPACLR is smaller than the CMPASET value, the clear value will not have any effect.

22.3.2.3.2 Two Ramp Mode

In Two Ramp Mode the TCD counter counts up until it reaches the CMPACLR value, then it resets and counts up until it reaches the CMPBCLR value. Then, the TCD cycle is done and the counter restarts from 0x000, beginning a new TCD cycle. The TCD cycle period is give by:

$$T_{\mathrm{TCD_cycle}} = \frac{(\mathrm{CMPACLR} + 1 + \mathrm{CMPBCLR} + 1)}{f_{\mathrm{CLK_TCD_CNT}}}$$

Figure 22-5. Two Ramp Mode

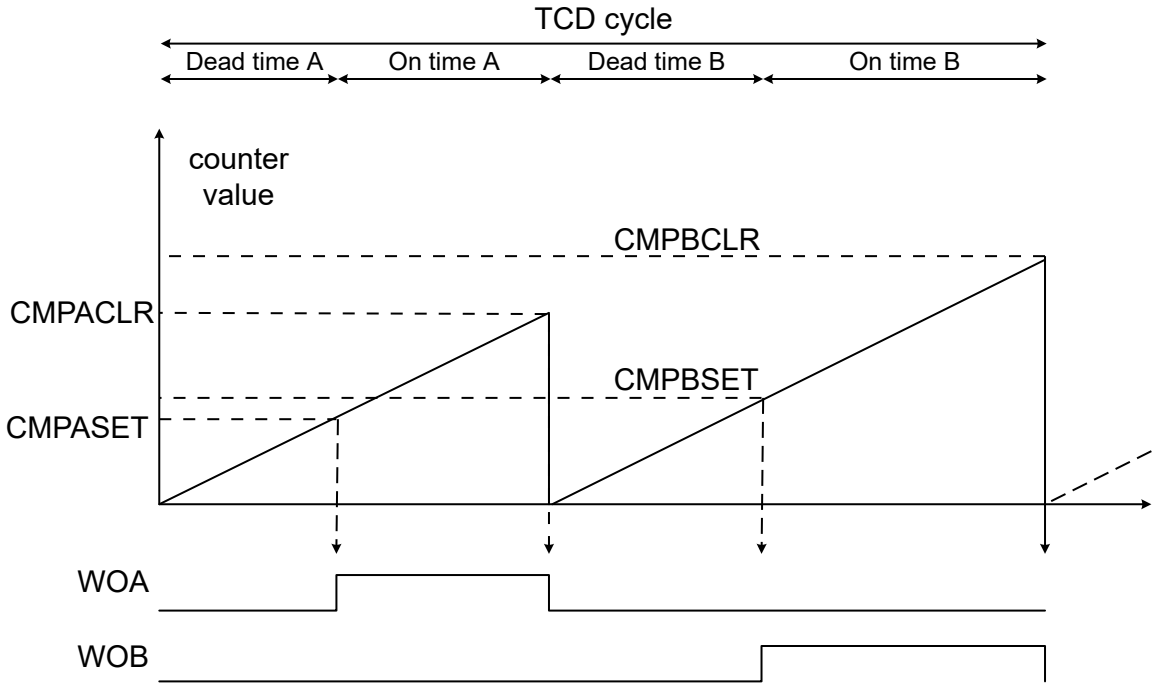

In the figure above, *CMPASET < CMPACLR and CMPBSET < CMPBCLR*. This causes the outputs to go high. There are no restrictions on the CMPASET/CLR compared to the CMPBSET/CLR values.

In two ramp mode it is not possible to get overlapping outputs.

22.3.2.3.3 Four Ramp Mode

In Four Ramp Mode the TCD cycle is following this pattern:

1. A TCD cycle begins with the TCD counter counting up from zero until it reaches the CMPASET value, and resets to zero.
2. The Counter counts up from zero until it reaches the CMPACLR value, and resets to zero.
3. The Counter counts up from zero until it reaches the CMPBSET value, and resets to zero.
4. The Counter counts up from zero until it reaches the CMPBCLR value, and ends the TCD cycle by resetting to zero.

The TCD cycle period is given by

$$T_{\mathrm{TCD_cycle}} = \frac{(\mathrm{CMPASET} + 1 + \mathrm{CMPACLR} + 1 + \mathrm{CMPBSET} + 1 + \mathrm{CMPBCLR} + 1)}{f_{\mathrm{CLK_TCD_CNT}}}$$

Figure 22-6. Four Ramp Mode

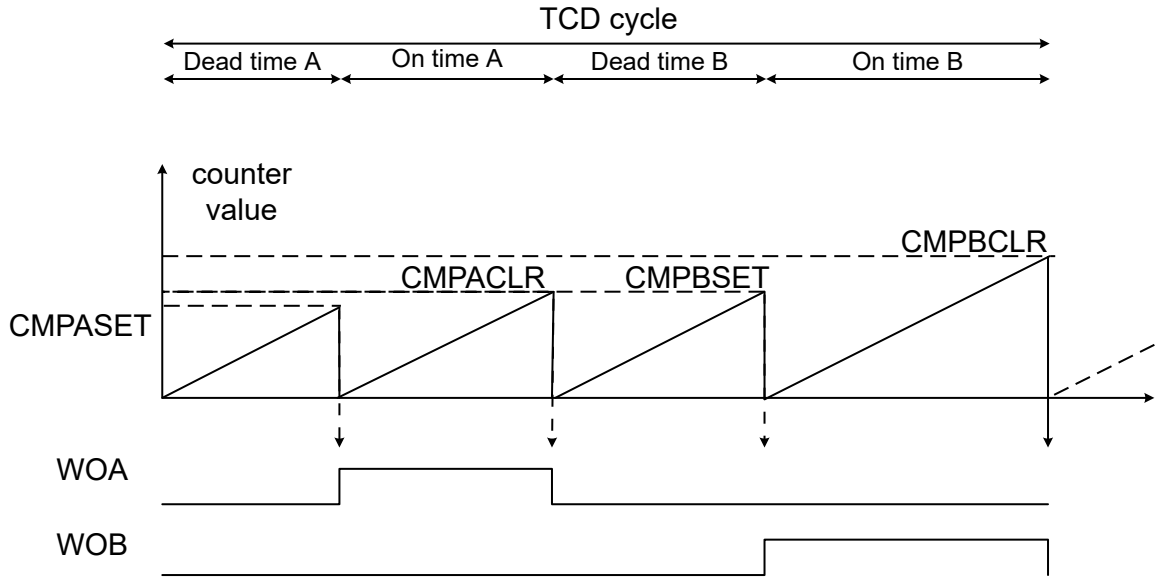

There are no restrictions on the compare values compared to each others.

In Four Ramp Mode it is not possible to get overlapping outputs.

22.3.2.3.4 Dual Slope Mode

In Dual Slope mode, a TCD cycle consists of the TCD counter counting down from CMPBCLR value to zero, and up again to the CMPBCLR value. This gives a TCD cycle period:

$$T_{\text{TCD_cycle}} = \frac{2 \times (\text{CMPBCLR} + 1)}{f_{\text{CLK_TCD_CNT}}}$$

The WOA output is set when the TCD counter counts up and matches the CMPASET value. WOA is cleared when the TCD counter counts down and matches the CMPASET value.

The WOB output is set when the TCD counter counts down and matches the CMPBSET value. WOB is cleared when the TCD counter counts up and matches the CMPBSET value.

Figure 22-7. Dual Slope Mode

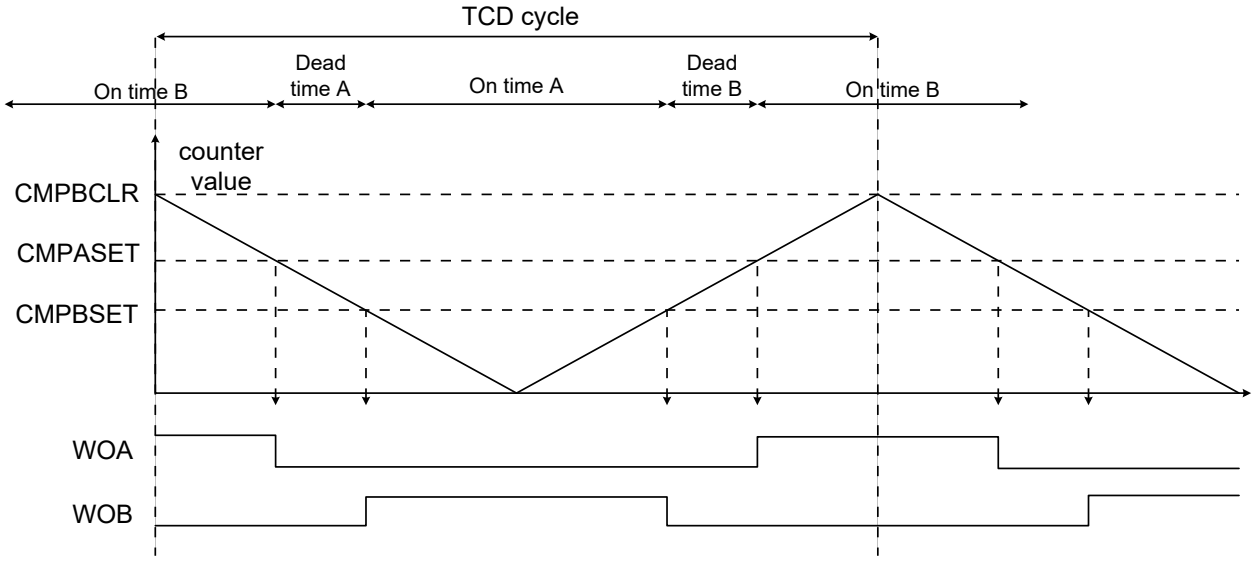

The outputs will be overlapping if CMPBSET > CMPASET.

CMPACLR is not used in Dual Slope Mode. Writing a value to CMPACLR has no effect.

When starting the TCD in Dual Slope Mode, the TCD counter starts at the CMPBCLR value and counts down. The WOA will not be set before the end of the first TCD cycle.

Figure 22-8. Dual Slope Mode Starting and Stopping

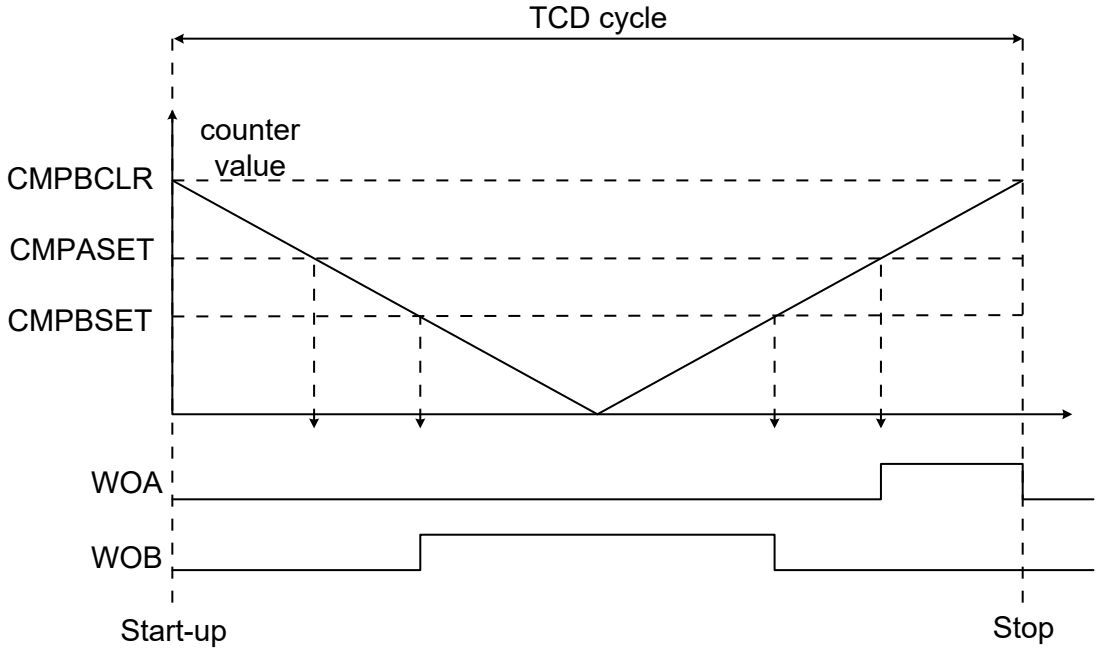

22.3.2.4 TCD Inputs

The TCD has two inputs that are connected to the Event System, Input A and Input B. Each input has functionality that are connected to corresponding output (WOA and WOB). That functionality is controlled by the Event Control x registers (TCD.EVCTRLA and TCD.EVCTRLB) and the Input Control x registers (TCD.INPUTACTRL and TCD.INPUTBCTRL).

To enable the input Events, write a '1' to the Trigger Event Input Enable bit (TRIGEI) in the Event Control register (TCD.EVCTRLx). The inputs will be used as a fault detect and/or capture trigger. To enable capture trigger, write a '1' to the ACTION bit in Event Control register (TCD.EVCTRLx).

There are ten different input modes for the fault detection. The two inputs have the same functionality, except for input blanking which is only supported by input A. Input blanking is configured by the Delay Control and Delay Value registers (TCD.DLYCTRL and TCD.DLYVAL).

The inputs are connected to the Event System. The connections between the Event source and the TCD input must be configured in the Event System.

An overview of the input system is shown below.

Figure 22-9. TCD Input Overview

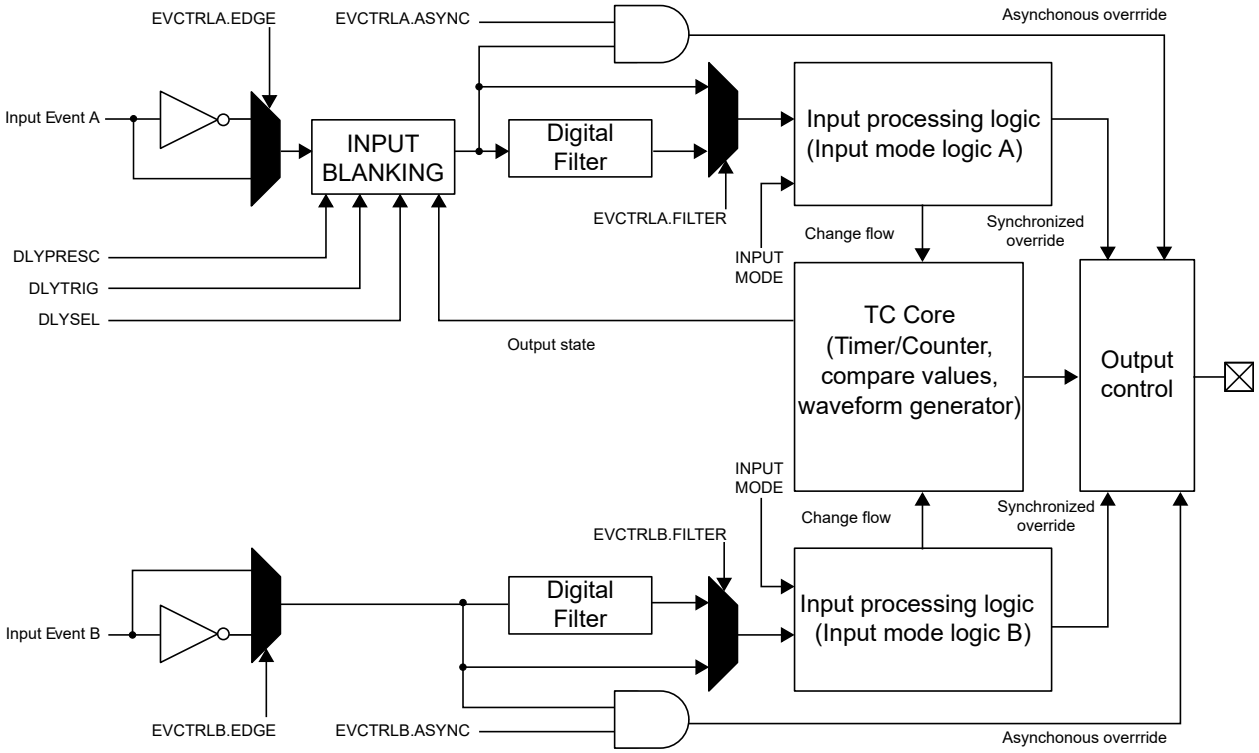

There is a delay of 2-3 clock cycles on the TCD synchronizer clock between receiving the input Event and processing it and overriding the outputs. If using the asynchronous Event detection, the outputs will override instantly outside the input processing.

22.3.2.4.1 Input Blanking

Input blanking functionality are masking out the input Events for a programmable time in a selectable part of the TCD cycle. Input blanking can be used to mask out "false" input Events that are triggered right after changes on the outputs.

To enable input blanking, write 0x1 to the Delay Select bit field in the Delay Control register (DLYSEL in TCD.DLYCTRL). The trigger source is selected by the Delay Trigger bit field (DLYTRIG in TCD.DLYCTRL).

Input blanking uses the Delay clock: after a trigger, a counter is counting up until the Delay Value (DLYVAL in TCD.DLYVAL) is reached before input blanking is turned off. The TCD delay clock is a prescaled version of the Synchronization clock. The division factor is set by the Delay Prescaler bit field in the Delay Control register (DLYPRESC in TCD.DLYCTRL). The duration of the input blanking is given by

$$t_{\mathrm{BLANK}} = \frac{\mathrm{DLYPRESC_division_factor} \times \mathrm{DLYVAL}}{f_{\mathrm{CLK_TCD_SYNC}}}$$

Input blanking is using the same logic as the programmable output Event. For this reason it is not possible to use both at the same time.

22.3.2.4.2 Digital Filter

The digital filter for Event input x is enabled by writing a '1' to the FILTER bit in the Event Control x register (TCD.EVCTRLx). When the digital filter is enabled, any pulse lasting less than 4 Counter clock cycles will be filtered out. Any change on incoming event will therefore take 4 Counter clock cycles before it will affect the input processing logic.

22.3.2.4.3 Asynchronous Event Detection

To enable asynchronous Event detection on an input Event, write a '1' to the Asynchronous Event Control bit (ASYNC) in the Event Control register (TCD.EVCTRLx).

The Asynchronous Event Detection makes it possible to asynchronously override the output when the input Event occurs. What the Input event will do is depending on Input Mode for the event input. The outputs have direct override while the counter flow will be changed when the event is synchronized to the Synchronization clock.

It is not possible to use both asynchronous Event detection and digital filtering at the same time.

22.3.2.4.4 Input Modes

The user can select between 10 input modes. The selection is done by writing the Input Mode bit field (INPUTMODE) in the Input control x register (TCD.INPUTCTRLx).

Table 22-4. Input mode description

INPUTMODE	Description
0x0	Input has no action
0x1	Stop output, jump to opposite compare cycle and wait
0x2	Stop output, execute opposite compare cycle and wait
0x3	Stop output, execute opposite compare cycle while fault active
0x4	Stop all outputs, maintain frequency
0x5	Stop all outputs, execute dead time while fault active
0x6	Stop all outputs, jump to next compare cycle and wait
0x7	Stop all outputs, wait for software action
0x8	Stop output on edge, jump to next compare cycle
0x9	Stop output on edge, maintain frequency
0xA	Stop output at level, maintain frequency
other	Reserved

Not all input modes works in all waveform generation modes. Below is a table that shows what waveform generation modes the different input modes are valid in.

Table 22-5. Ramp mode the different input modes are vaild in

INPUTMODE	One Ramp mode	Two ramp mode	Four ramp mode	Dual slope mode
0x1	Valid	Valid	Valid	Do not use
0x2	Do not use	Valid	Valid	Do not use
0x3	Do not use	Valid	Valid	Do not use
0x4	Valid	Valid	Valid	Valid
0x5	Do not use	Valid	Valid	Do not use
0x6	Do not use	Valid	Valid	Do not use
0x7	Valid	Valid	Valid	Valid
0x8	Valid	Valid	Valid	Do not use
0x9	Valid	Valid	Valid	Do not use
0xA	Valid	Valid	Valid	Do not use

In the following sections the different input modes are presented in detail.

Input Mode 1: Stop Output, Jump to Opposite Compare Cycle and Wait

An input Event in Input mode 1 will stop the output signal, jump to the opposite dead-time, and wait until the input event goes low before the TCD counter continues.

If Input mode 1 is used on input A, an Event will only have an effect if the TCD is in Dead time A or On-time A, and it will only effect the output WOA. When the Event is done, the TCD counter starts at Dead time B.

Figure 22-10. Input Mode 1 on Input A

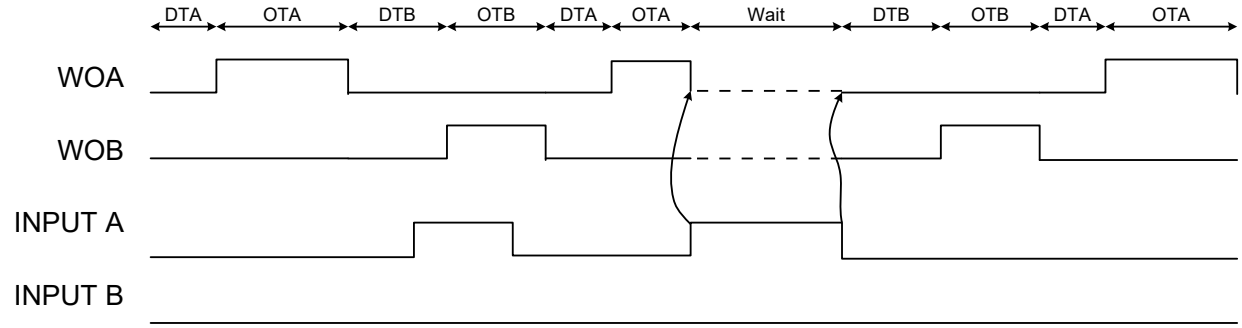

If Input mode 1 is used on input B, an Event will only have an effect if the TCD is in Dead time B or On-time B, and it will only effect the output WOB. When the event is done, the TCD counter starts at Dead time A.

Figure 22-11. Input Mode 1 on Input B

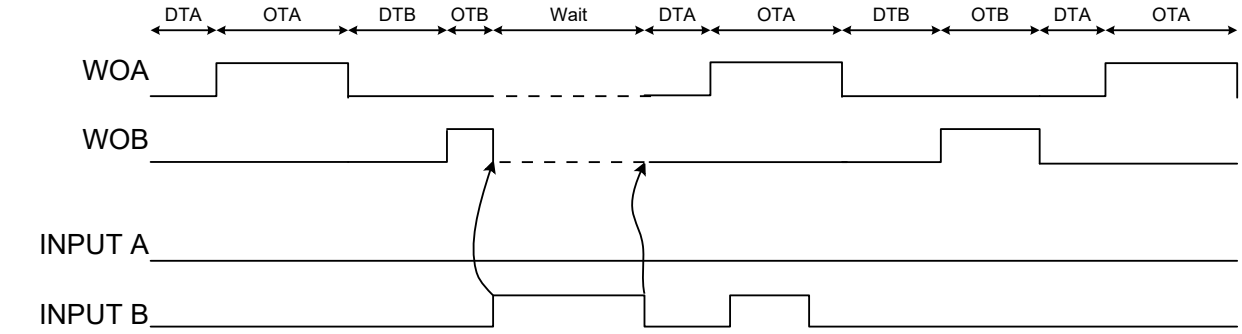

Input Mode 2: Stop Output, Execute Opposite Compare Cycle and Wait

An input Event in Input mode 2 will stop the output signal, execute to the opposite dead-time and on-time, then wait until the input Event goes low before the TCD counter continues. If the input is done before the opposite dead-time and on-time have finished, there will be no waiting, but the opposite dead-time and on-time will continue.

If Input mode 2 is used on input A, an Event will only have an effect if the TCD is in Dead time A or On-time A, and it will only effect the output WOA.

Figure 22-12. Input Mode 2 on Input A

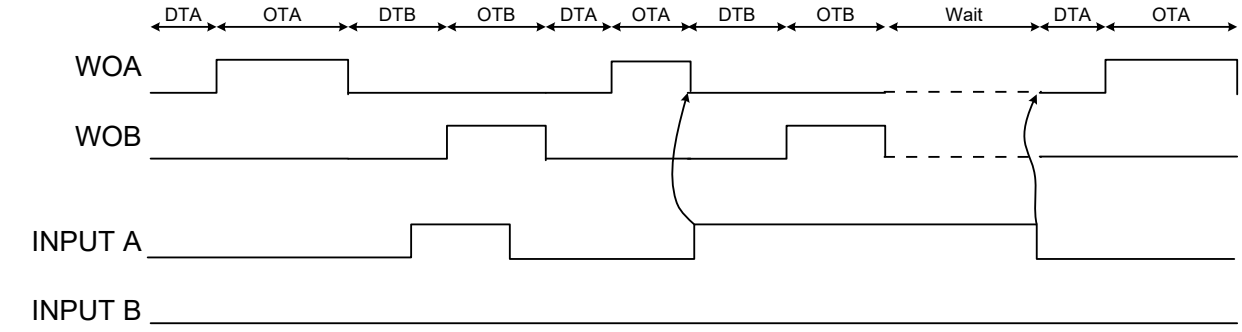

If Input mode 2 is used on input B, an Event will only have an effect if the TCD is in Dead time B or On-time B, and it will only effect the output WOB.

Figure 22-13. Input Mode 2 on Input B

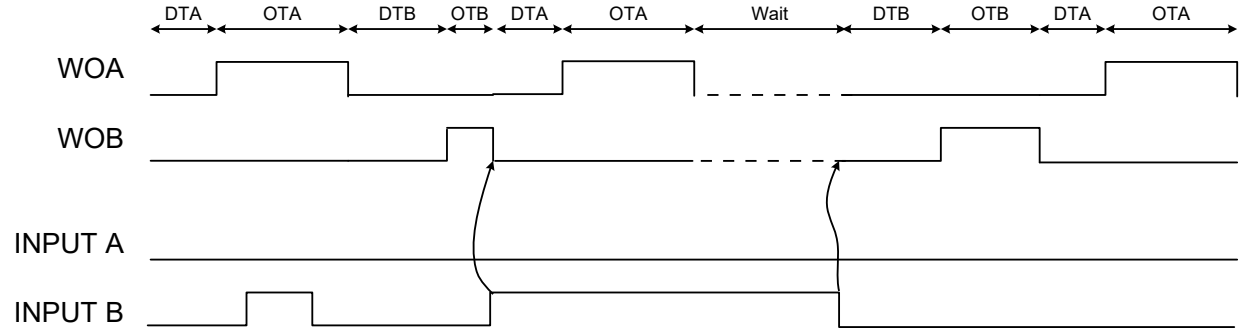

Input Mode 3: Stop Output, Execute Opposite Compare Cycle while Fault Active

An input Event in Input mode 3 will stop the output signal and start executing the opposite dead-time and on-time, as long as the fault/input is active. When the input is released, the ongoing dead time and/or on-time will finish and then, normal flow will start.

If Input mode 3 is used on input A, an Event will only have an effect if the TCD is in Dead time A or On-time A.

Figure 22-14. Input Mode 3 on Input A

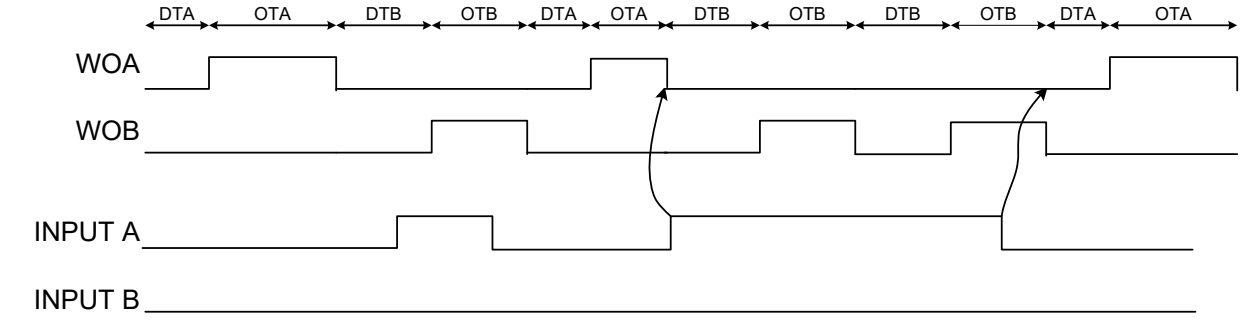

If Input mode 3 is used on input B, an Event will only have an effect if the TCD is in Dead time B or On-time B.

Figure 22-15. Input Mode 3 on Input B

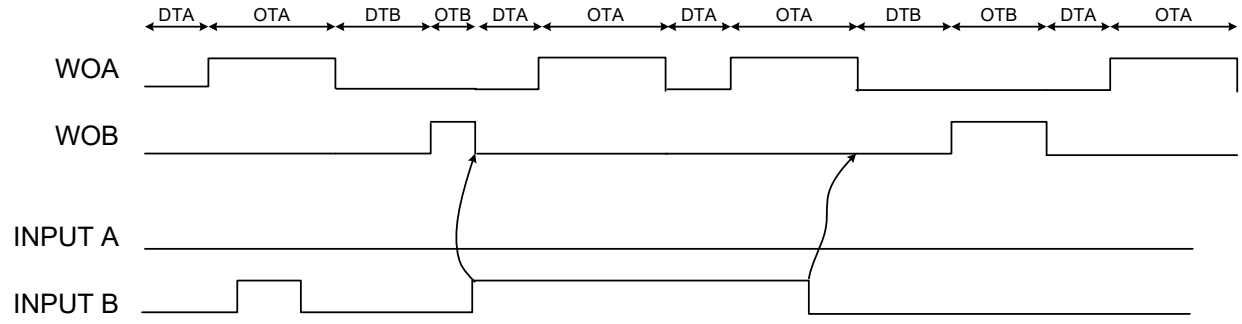

Input Mode 4: Stop all Outputs, Maintain Frequency

When input mode 4 is used, both input A and input B will give the same functionality.

An input Event will deactivate the outputs as long as the Event is active. TheTCD counter will not be affected by Events in this input mode.

Figure 22-16. Input Mode 4

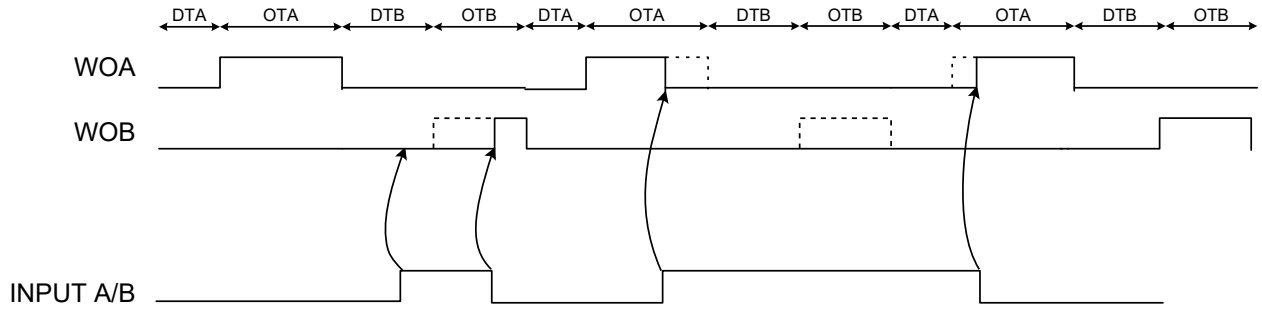

Input Mode 5: Stop all Outputs, Execute Dead Time while Fault Active

When input mode 5 is used, both input A and input B give the same functionality:

The input Event stops the outputs and starts on the opposite dead time if it occurs during an on-time. If the Event occurs during a dead time, it will continue until the next on-time should start, but instead it will jump to the next dead time. As long as the input Event is active, alternating dead times will occur. When the input Event stops, the ongoing dead time will finish and the next on-time will continue in the normal flow.

Figure 22-17. Input Mode 5

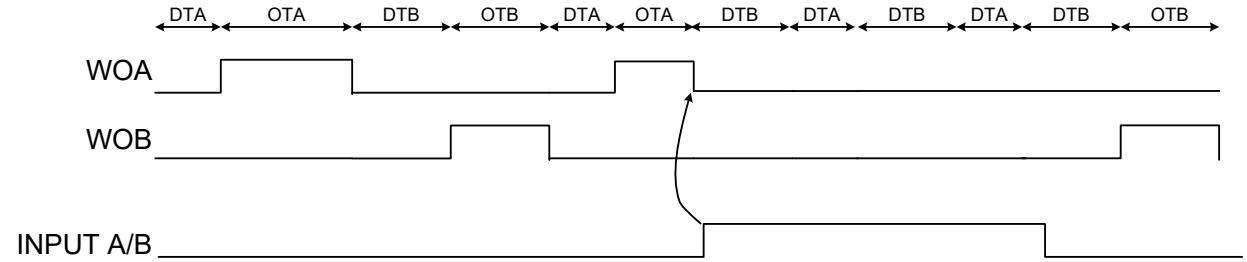

Input Mode 6: Stop all Outputs, Jump to next Compare Cycle and Wait

When input mode 6 is used both input A and input B will give the same functionality. The input Event stops the outputs and jumps to the opposite dead time if it occurs during a on time. If the Event occurs during a dead time, it will continue until the next on-time should start, but instead, it will jump to the next dead time. As long as the input Event is active, the TCD counter will wait. When the input Events stops, the next dead time will start and normal flow will continue.

Figure 22-18. Input Mode 6

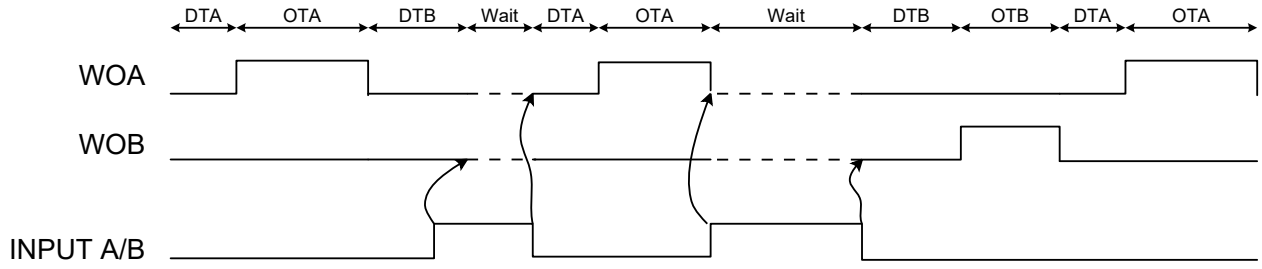

Input Mode 7: Stop all Outputs, Wait for Software Action

When input mode 7 is used, both input A and input B will give the same functionality. The input Events stops the outputs and TCD counter. It will be stopped until a Restart command is given. If the input Event still is high when the Restart command is given, it will just stop again. When the TCD counter restarts, it will always start on Dead time A.

Figure 22-19. Input Mode 7

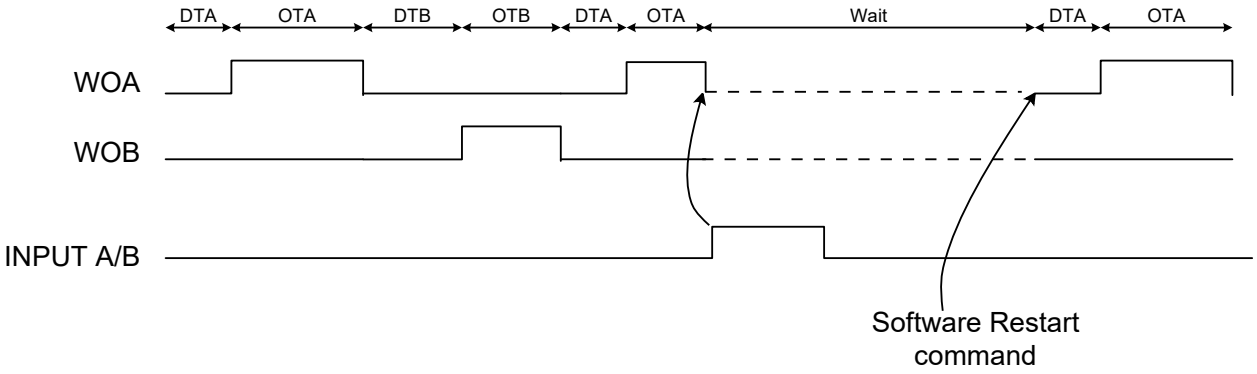

Input Mode 8: Stop Output on Edge, Jump to Next Compare Cycle

In Input mode 8, a positive edge on the input Event while the corresponding output is on will cause the output to stop and the TCD counter jump to the opposite Dead time.

If Input mode 8 is used on input A and an positive input event occurs while in On time A, the TCD counter jumps to Dead time B.

Figure 22-20. Input Mode 8 on Input A

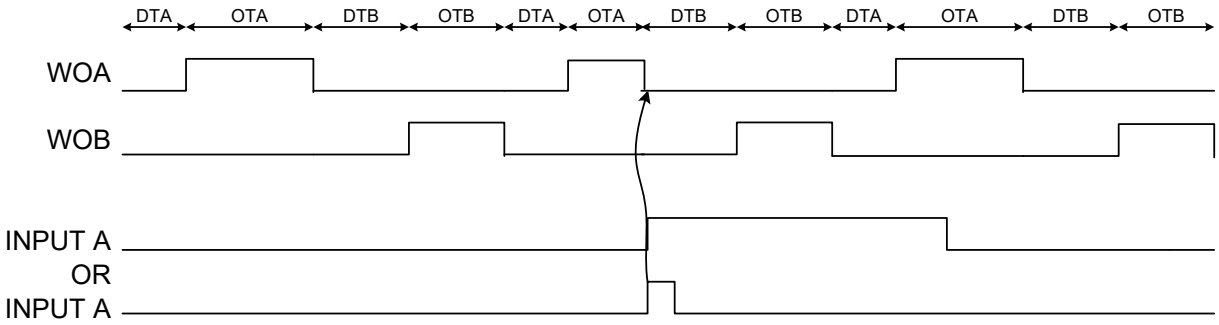

If Input mode 8 is used on input B and an positive input event occurs while in On time B, the TCD counter jumps to Dead time A.

Figure 22-21. Input Mode 8 on Input B

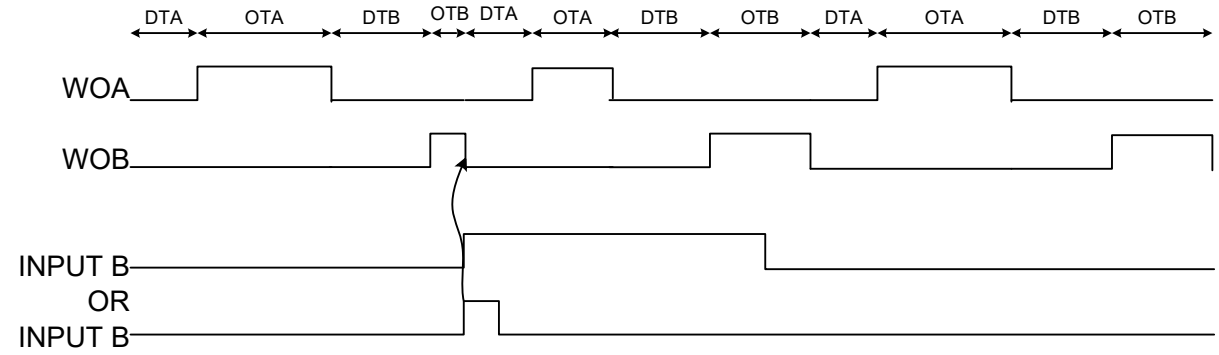

Input Mode 9: Stop Output at Level, Maintain Frequency

In Input mode 9 a positive edge on the input Event while the corresponding output is on will cause the output to stop during the rest of the on-time. The TCD counter will not be affected by the Event, only the output.

If Input mode 9 is used on input A and an positive input Event occurs while in On time A, the output will be off for the rest of the on-time.

Figure 22-22. Input Mode 9 on Input A

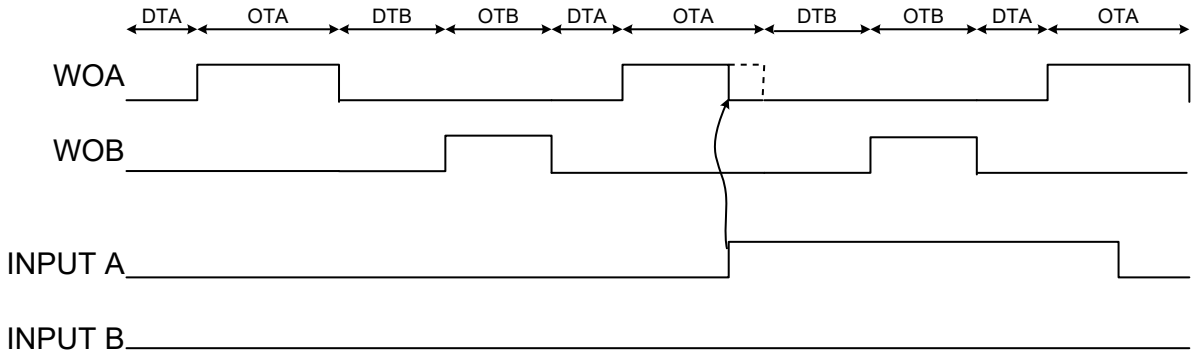

If Input mode 9 is used on input B and an positive input event occurs while in On time B, the output will be off for the rest of the on-time.

Figure 22-23. Input Mode 9 on Input B

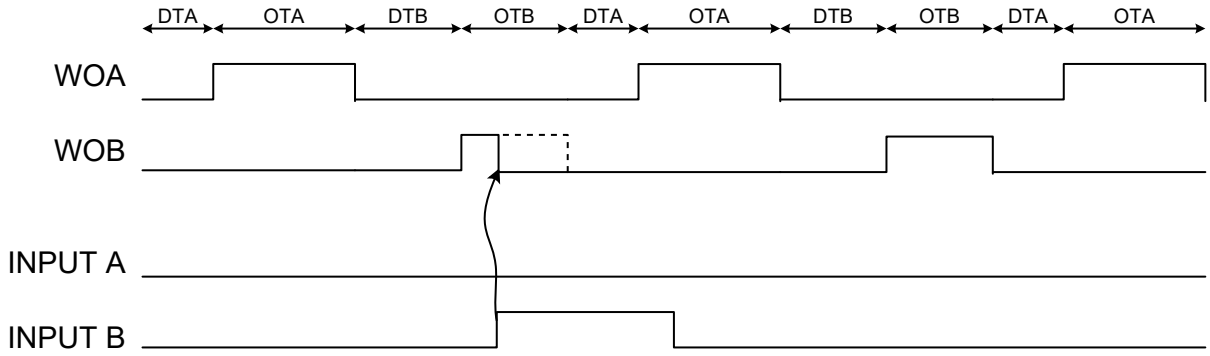

Input Mode 10: Stop Output on Edge, Maintain Frequency

In Input mode 10 the input Event will cause the corresponding output to stop as long as the input is active. If the input goes low while there should have been an on-time on the corresponding output, the output will be deactivated for the rest of the on-time, too. The TCD counter is not affected by the Event, only the output.

If Input mode 10 is used on input A and an input event occurs, the WOA will be off as long as the event lasts. If released during an on-time, it will be off for the rest of the on-time, too.

Figure 22-24. Input Mode 10 on Input A

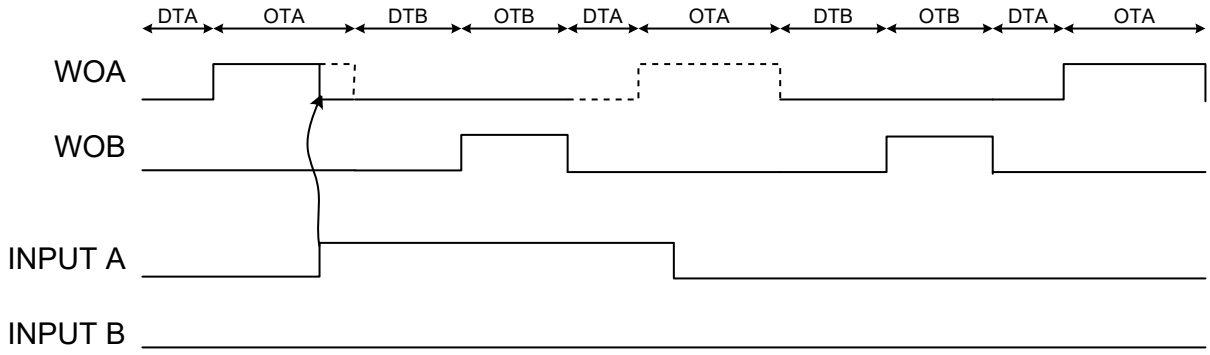

If Input mode 10 is used on input B and an input Event occurs, the WOB will be off as long as the Event lasts. If released during an on-time, it will be off for the rest of the on-time, too.

Figure 22-25. Input Mode 10 on Input B

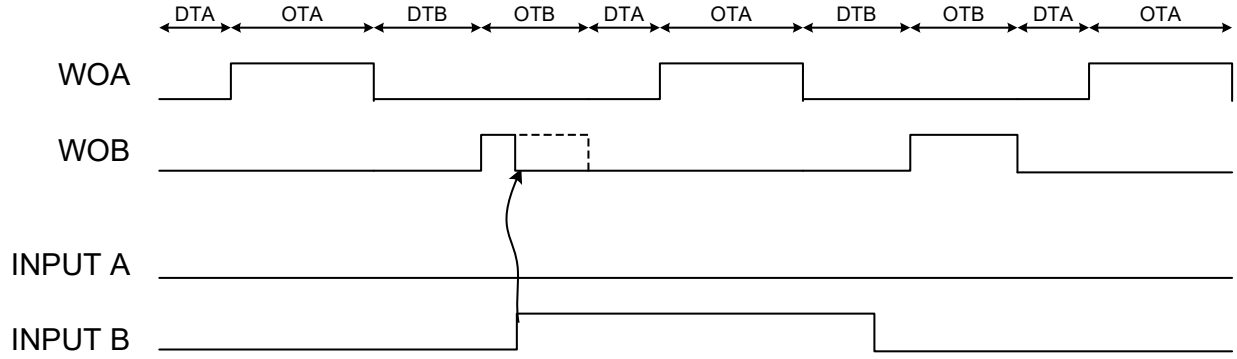

Input Mode Summary

The table below summarizes the conditions as illustrated in the timing diagrams of the preceding sections.

Table 22-6. Input mode summary

INPUTMODE	Trigger → Output affected	Fault On/Active	Fault Release/Inactive
0x00	-	No action	No action
0x01	Input A→WOA	End current on-time and wait	Start with dead-time for other compare
	Input B→WOB		
0x02	Input A→WOA	End current on-time. Execute other compare cycle and wait	Start with dead-time for current compare
	Input B→WOB		
0x03	Input A→WOA	End current on-time. Execute other compare cycle	Re-enable current compare cycle
	Input B→WOB		
0x04	Input A→{WOA, WOB}	Deactivate outputs	
	Input B→{WOA, WOB}		
0x05	Input A→{WOA, WOB}	Execute dead-time only	
	Input B→{WOA, WOB}		
0x06	Input A→{WOA, WOB}	End on-time and wait	Start with dead-time for other compare
	Input B→{WOA, WOB}		
0x07	Input A→{WOA, WOB}	End on-time and wait for software action	Start with dead-time for current compare
	Input B→{WOA, WOB}		
0x08	Input A→WOA	End current on-time and continue with other off-time	
	Input B→WOB		
0x09	Input A→WOA	Block current on-time and continue sequence	
	Input B→WOB		
0x0A	Input A→WOA	Deactivate on-time until end of sequence while trigger is active	
	Input B→WOB		
other	-	-	-

22.3.2.5 Dithering

If it is not possible to achieve the desired frequency because of pre-scaler/period selection limitations, Dithering can be used to approximate the desired frequency and reduce waveform drift.

Dither accumulates the fractional error of the counter clock for each cycle. When the fractional error overflows, an additional cycle is added to the selected part of the cycle.

Example 22-1. Example

If the timer clock frequency is 10MHz, it will give the timer a resolution of 100ns. Then, the output frequency should be 75 kHz. Here 75 kHz means a period of 13333ns, and that is not possible to achieve with a constant period with a 100ns resolution because it equals 133.33 cycles. The output period can be set to either 133 cycles (75.188kHz) or 134 cycles (74.626 kHz).

It is possible to change the period between the two frequencies manually in the firmware to get an average output frequency of 75 kHz. (change the every 3rd period to 134 cycles) The dither can do this automatically by accumulating the error (0.33 cycles). The accumulator calculate when the accumulated error is larger than one clock cycle and when that happens it adds an additional cycle to the timer period.

Figure 22-26. Dither Logic

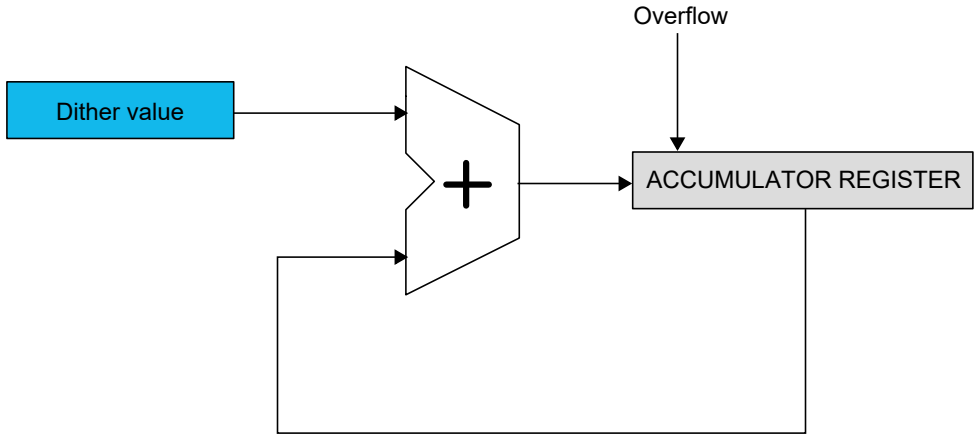

The user can select where in the TCD cycle the dither will be added by writing to the Dither Selection bits in the Dither Control register (DITHERSEL in TCD.DITCTRL):

- On-time B
- On-time A and B
- Dead-time B
- Dead-time A and B

How much the dithering will affect the TCD cycle time depends on what Waveform Generation Mode is used, see table below.

Dithering is not supported in Dual Slope Mode.

Table 22-7. Mode-Dependent Dithering Additions to TCD Cycle

WAVEGEN	DITHERSEL in TCD.DITCTRL	Additional TCD clock cycles to TCD cycle
One Ramp Mode	On-time B	1
	On-time A and B	1
	Dead-time B	0
	Dead-time A and B	0

.....continued		
WAVEGEN	**DITHERSEL in TCD.DITCTRL**	**Additional TCD clock cycles to TCD cycle**
Two Ramp Mode	On-time B	1
	On-time A and B	2
	Dead-time B	0
	Dead-time A and B	0
Four Ramp Mode	On-time B	1
	On-time A and B	2
	Dead-time B	1
	Dead-time A and B	2
Dual Slope Mode	On-time B	0 (not supported)
	On-time A and B	0 (not supported)
	Dead-time B	0 (not supported)
	Dead-time A and B	0 (not supported)

The differences in the number of TCD clock cycles added to the TCD cycle is caused by the different number of compare values used by the TCD cycle. For example in One Ramp Mode, only CMPBCLR affects the TCD cycle time.

For DITHERSEL configurations where no extra cycles are added to the TCD cycles, compensation is reached by shortening the following output state.

Example 22-2. Example:

In One Ramp Mode with DITHERSEL selecting Dead-time B, the Dead-time B will be increased by one cycle when dither overflow occurs. This reduces On-time B by one cycle.

22.3.2.6 TCD Counter Capture

Because the TCD counter is asynchronous to the system clock it is not possible to read out the counter value directly. It is possible to capture the TCD counter value, synchronized to the IO clock domain in two different ways.

- Capture value on input Events
- Software capture

The capture logic contains two separate capture blocks, CAPTUREA and CAPTUREB, that can capture and synchronize the TCD counter value to the IO clock domain. CAPTUREA/B can be triggered by input Event A/B or by software.

The capture values can be read by reading first TCD.CAPTUREExL and then TCD.CAPTUREExH registers.

Captures Triggered by Input Events

To enable capture on input Event, write a '1' to the ACTION bit in the respective Event Control x register (TCD.EVCTRL) when configuring an Event input.

When a capture has occurred, the TRIGA/B flag is raised in the Interrupt Flags register (TCD.INTFLAGS). The according TRIGA/B interrupt is executed if enabled by writing a '1' to the respective Trigger Interrupt x Enable bit (TRIGx) in the Interrupt Control register (TCD.INTCTRL). By polling TRIGx in TCD.INTFLAGS, the user knows that a CAPTUREx value is available, and can read out the value by reading first the TCD.CAPTUREExL and then TCD.CAPTURxH registers.

Example 22-3. Example

In order to do PWM capture both event A and B should be connected to the same asynchronous event channel that contains the PWM signal. To get information on the PWM signal one event input

should be configured to capture the rising edge of the signal. The other event input should be configured to capture the falling edge of the signal.

Capture Triggered by Software
Software can capture the TCD value by writing a '1' to respective Software Capture A/B Strobe bit (SCAPTUREx) in the Control E register (TCD.CTRLE). When this command is executed and the Command Ready bit (CMDRDY) in the Status register (TCD.STATUS) reads '1' again, the CAPTUREA/B value is available. It can now be read by reading first the TCD.CAPTUREExL and then the TCD.CAPTURxH registers.

Using Capture together with input modes
The capture functionality can be used together with input modes. The same event will then both capture the counter value and trigger a change in the counter flow depending on the input mode selected.

Example 22-4. Example

If the user what to reset the counter when running in One Ramp mode whenever the input event capture the counter value this can be done by using input event B and setting INPUTCTRLB register to 0x08.

Related Links
22.3.1 Initialization and Disabling

22.3.2.7 Output Control

The outputs are configured by writing to the Fault Control register (TCD.FAULTCTRL). TCD.FAULTCTRL is only reset to zero after a POR reset. During the reset sequence after any Reset, TCD.FAULTCTRL will get its values from the TCD Fuse (FUSE.TCDCFG).

The Compare x Enable bits (CMPxEN in TCD.FAULTCTRL) enable the different outputs. The CMPx bits in TCD.FAULTCTRL set the value the registers should have after Reset or when a fault is triggered.

The TCD itself generates two different outputs, WOA and WOB. The two additional outputs WOC and WOD can be configured by software to be connected to either WOA or WOB by writing the Compare C/D Output Select bits (CMPCSEL and CMPDSEL) in the Control C register (TCD.CTRLC).

The user can also override the outputs based on the TCD counter state by writing a '1' to the Compare Output Value Override bit in the Control C register (CMPOVR in TCD.CTRLC). The user can then select the output values in the different dead- and on times by writing to the Compare x Value bit fields in the Control D register (CMPAVAL and CMPBVAL in TCD.CTRLD).

When used in One Ramp mode, WOA will only use the setup for Dead Time A (DTA) and On Time A (OTA) to set the output. WOB will only use Dead-Time B (DTB) and On Time B (OTB) values to set the output.

When using the override feature together with faults detection (input modes) the CMPA (and CMPC/D if WOC/D equals WOA) bit in TCD.FAULTCTRL should be equal to CMPAVAL[0] and [2] in TCD.CTRLD. if not the first cycle after a fault is detected can have the wrong polarity on the outputs. The same applies to CMPB in TCD.FAULTCTRL (and CMPC/D if WOC/D equals WOB) bit, which should be equal to CMPBVAL[0] and [2] in TCD_CTRLD.

Due to the asynchronous nature of the TCD, that input events immediately can affect the output signal, there is a risk of nano-second spikes occurring on the output when there is no load on the pin. The case occurs in any input mode different from 0 and when an input event is triggering. The spike value will always be in direction of the CMPx value given by the FAULTCTRL register.

Related Links
6.9.4.4 TCD0CFG

22.3.3 Events

The TCD can generate the following output events:

- TCD counter matches CMPBCLR
- TCD counter matches CMPASET

- TCD counter matches CMPBSET
- Programmable TCD output event. The user can select trigger, and all the different compare matches. In addition it is possible to delay the output Event from 0 to 256 TCD delay cycles.

The three events based on the counter match directly generate event strobes that last one clock cycle on the TCD counter clock. The programmable output event generates a event strobe that last one clock cycle on the TCD synchronizer clock.

The TCD has the possibility to receive these input Events:

- Input A
- Input B

Related Links

22.3.2.4 TCD Inputs

14. EVSYS - Event System

22.3.3.1 Programmable output events

Programmable output event uses the same logic as the Input blanking for trigger selection and delay. It is therefore not possible to configure the functionalities independently. If the input blanking functionality is used, the output event cannot be delayed and the trigger used for input blanking will also be used for the output event.

The programmable output events are controlled by the DLYCTRL and DLYVAL registers. It is possible to delay the output event by 0 to 256 TCD delay clock cycles if the DLYTRIG bits in DLYCTRL is set to 0x2. The delayed output event functionality uses the TCD delay clock and counts until the DLYVAL value is reached before the trigger is sent out as a event. The TCD delay clock is a prescaled version of the TCD synchronization clock and the division factor is set by the DLYPRESC bits in the DLYCTRL register. The output event will be delayed by TCD clock period x DLYPRESC division factor x DLYVAL.

22.3.4 Interrupts

Table 22-8. Available Interrupt Vectors and Sources

Offset	Name	Vector Description	Conditions
0x00	OVF	Overflow interrupt	The TCD is done with one TCD cycle.
0x02	TRIG	Trigger interrupt	• TRIGA: Counter is entering On-Time A • TRIGB: Counter is entering On-Time B

When an interrupt condition occurs, the corresponding Interrupt Flag is set in the Interrupt Flags register of the peripheral (*peripheral*.INTFLAGS).

An interrupt source is enabled or disabled by writing to the corresponding enable bit in the peripheral's Interrupt Control register (*peripheral*.INTCTRL).

An interrupt request is generated when the corresponding interrupt source is enabled and the Interrupt Flag is set. The interrupt request remains active until the Interrupt Flag is cleared. See the peripheral's INTFLAGS register for details on how to clear Interrupt Flags.

When several interrupt request conditions are supported by an interrupt vector, the interrupt requests are ORed together into one combined interrupt request to the Interrupt Controller. The user must read the peripheral's INTFLAGS register to determine which of the interrupt conditions are present.

Related Links

13. CPUINT - CPU Interrupt Controller

8.7.3 SREG

22.3.5 Sleep Mode Operation

The TCD operates in Idle sleep, and is stopped when entering Standby and Power Down sleep modes.

22.3.6 Synchronization

The TCD has two different clock domains and needs to synchronize the communication between the domains. See Initialization section for detail on how the synchronization of values from the IO clock domain to the TCD clock domain is done. See the Capture section for details on how the synchronization of values from the TCD clock domain to the IO clock domain is done.

Related Links

22.3.1 Initialization and Disabling
22.3.2.6 TCD Counter Capture

22.3.7 Configuration Change Protection

This peripheral has registers that are under Configuration Change Protection (CCP). In order to write to these, a certain key must be written to the CPU.CCP register first, followed by a write access to the protected bits within four CPU instructions.

It is possible to try writing to these registers any time, but the values are not altered.

The following registers are under CCP:

Table 22-9. TCD - Registers under Configuration Change Protection

Register	Key
TCD.FAULTCTRL	IOREG

22.4 Register Summary - TCD

Offset	Name	Bit Pos.									
0x00	CTRLA	7:0		CLKSEL[1:0]		CNTPRES[1:0]		SYNCPRES[1:0]			ENABLE
0x01	CTRLB	7:0							WGMODE[1:0]		
0x02	CTRLC	7:0	CMPDSEL	CMPCSEL			FIFTY		AUPDATE		CMPOVR
0x03	CTRLD	7:0	CMPBVAL[3:0]				CMPAVAL[3:0]				
0x04	CTRLE	7:0	DISEOC			SCAPTUREB	SCAPTUREA	RESTART	SYNC		SYNCEOC
0x05 ... 0x07	Reserved										
0x08	EVCTRLA	7:0	CFG[1:0]			EDGE		ACTION			TRIGEI
0x09	EVCTRLB	7:0	CFG[1:0]			EDGE		ACTION			TRIGEI
0x0A ... 0x0B	Reserved										
0x0C	INTCTRL	7:0					TRIGB	TRIGA			OVF
0x0D	INTFLAGS	7:0					TRIGB	TRIGA			OVF
0x0E	STATUS	7:0	PWMACTB	PWMACTA					CMDRDY		ENRDY
0x0F	Reserved										
0x10	INPUTCTRLA	7:0					INPUTMODE[3:0]				
0x11	INPUTCTRLB	7:0					INPUTMODE[3:0]				
0x12	FAULTCTRL	7:0	CMPDEN	CMPCEN	CMPBEN	CMPAEN	CMPD	CMPC	CMPB		CMPA
0x13	Reserved										
0x14	DLYCTRL	7:0			DLYPRESC[1:0]		DLYTRIG[1:0]		DLYSEL[1:0]		
0x15	DLYVAL	7:0	DLYVAL[7:0]								
0x16 ... 0x17	Reserved										
0x18	DITCTRL	7:0							DITHERSEL[1:0]		
0x19	DITVAL	7:0					DITHER[3:0]				
0x1A ... 0x1D	Reserved										
0x1E	DBGCTRL	7:0						FAULTDET			DBGRUN
0x1F ... 0x21	Reserved										
0x22	CAPTUREA	7:0	CAPTURE[7:0]								
		15:8					CAPTURE[11:8]				
0x24	CAPTUREB	7:0	CAPTURE[7:0]								
		15:8					CAPTURE[11:8]				
0x26 ... 0x27	Reserved										
0x28	CMPASET	7:0	CMPSET[7:0]								
		15:8					CMPSET[11:8]				
0x2A	CMPACLR	7:0	CMPCLR[7:0]								
		15:8					CMPCLR[11:8]				
0x2C	CMPBSET	7:0	CMPSET[7:0]								
		15:8					CMPSET[11:8]				
0x2E	CMPBCLR	7:0	CMPCLR[7:0]								
		15:8					CMPCLR[11:8]				

22.5 Register Description

22.5.1 Control A

Name: CTRLA
Offset: 0x00
Reset: 0x00
Property: Enable-protected

Bit	7	6	5	4	3	2	1	0
		CLKSEL[1:0]		CNTPRES[1:0]		SYNCPRES[1:0]		ENABLE
Access		R/W	R/W	R/W	R/W	R/W	R/W	R/W
Reset		0	0	0	0	0	0	0

Bits 6:5 – CLKSEL[1:0] Clock Select
The clock select bits select the clock source of the TCD clock.

Value	Description
0x0	OSC20M
0x1	Reserved
0x2	External clock
0x3	System clock

Bits 4:3 – CNTPRES[1:0] Counter Prescaler
The Counter Prescaler bits select the division factor of the TCD counter clock.

Value	Description
0x0	Division factor 1
0x1	Division factor 4
0x2	Division factor 32
0x3	Reserved

Bits 2:1 – SYNCPRES[1:0] Synchronization Prescaler
The synchronization prescaler bits select the division factor of the TCD clock.

Value	Description
0x0	Division factor 1
0x1	Division factor 2
0x2	Division factor 4
0x3	Division factor 8

Bit 0 – ENABLE Enable
When this bit is written to, it will automatically be synchronized to the TCD clock domain.
This bit can be changed as long as synchronization of this bit is not ongoing, see Enable Ready bit (ENRDY) in Status register (STATUS).
This bit is not enable-protected.

Value	Description
0	The TCD is disabled.
1	The TCD is enabled and running.

22.5.2 Control B

Name: CTRLB
Offset: 0x01
Reset: 0x00
Property: -

Bit	7	6	5	4	3	2	1	0
							WGMODE[1:0]	
Access							R/W	R/W
Reset							0	0

Bits 1:0 – WGMODE[1:0] Waveform Generation Mode
These bits select the waveform generation

Value	Name	Description
0x0	ONERAMP	One ramp mode
0x1	TWORAMP	Two ramp mode
0x2	FOURRAMP	Four ramp mode
0x3	DS	Dual-slope mode

22.5.3 Control C

Name: CTRLC
Offset: 0x02
Reset: 0x00
Property: -

Bit	7	6	5	4	3	2	1	0
	CMPDSEL	CMPCSEL			FIFTY		AUPDATE	CMPOVR
Access	R/W	R/W			R/W		R/W	R/W
Reset	0	0			0		0	0

Bit 7 – CMPDSEL Compare D Output Select

Value	Name	Description
0	PWMA	Waveform A
1	PWMB	Waveform B

Bit 6 – CMPCSEL Compare C Output Select

Value	Name	Description
0	PWMA	Waveform A
1	PWMB	Waveform B

Bit 3 – FIFTY Fifty Percent Waveform
If the two waveforms have identical characteristics, this bit can be written to '1'. This will cause any values written to register CMPBSET/CLR also to be written to the register CMPASET/CLR.

Bit 1 – AUPDATE Automatically Update
If this bit is set a synchronization at the end of the TCD cycle is automatically requested after the Compare B Clear High register (CMPBCLRH) is written.
If the Fifty Percent Waveform is enabled by setting the FIFTY bit in this register, writing the Compare A Clear High register will also request a synchronization at the end of the TCD cycle if the AUPDATE bit is set.

Bit 0 – CMPOVR Compare Output Value Override
When this bit is written, default values of the Waveform Outputs A and B are overridden by the values written in the Compare x Value in active state bit fields in the Control D register (CTRLD.CMPnxVAL). See the Control D register description for more details.

22.5.4 Control D

Name: CTRLD
Offset: 0x03
Reset: 0x00
Property: -

Bit	7	6	5	4	3	2	1	0
	CMPBVAL[3:0]				CMPAVAL[3:0]			
Access	R/W	R/W	R/W	R/W	R/W	R/W	R/W	R/W
Reset	0	0	0	0	0	0	0	0

Bits 0:3, 4:7 – CMPVAL Compare x Value (in active state)
These bits sets the active state for the different ramps for compare x.
These settings are only valid if the Compare Output Value Override bit in the Control C register (CTRLC.CMPOVR) is written to '1'.

CMPxVAL	A_off	A_on	B_off	B_on
PWMA	CMPAVAL[0]	CMPAVAL[1]	CMPAVAL[2]	CMPAVAL[3]
PWMB	CMPBVAL[0]	CMPBVAL[1]	CMPBVAL[2]	CMPBVAL[3]

In One Ramp mode, PWMA will only use A_off and A_on values and PWMB will only use B_off and B_on values. This is due to possible overlap between the values A_off, A_on, B_off and B_on.

22.5.5 Control E

Name: CTRLE
Offset: 0x04
Reset: 0x00
Property: -

Bit	7	6	5	4	3	2	1	0
	DISEOC			SCAPTUREB	SCAPTUREA	RESTART	SYNC	SYNCEOC
Access	R/W			R/W	R/W	R/W	R/W	R/W
Reset	0			0	0	0	0	0

Bit 7 – DISEOC Disable at End of TCD Cycle Strobe
When this bit is written, the TCD will automatically disable at the end of the TCD cycle.
When this bit is written to '1', the ENRDY in TCD.STATUS will keep low until the TCD is disabled.
Writing to this bit only has effect if there is no ongoing synchronization of Enable. See also ENRDY bit in TCD.STATUS.

Bit 4 – SCAPTUREB Software Capture B Strobe
When this bit is written to '1', a software capture to Capture register B (TCD.CAPTUREBL/H) is done as soon as the strobe is synchronized to the TCD domain.
Writing to this bit only has effect if there is no ongoing synchronization of a command. See also CMDRDY bit in TCD.STATUS.

Bit 3 – SCAPTUREA Software Capture A Strobe
When this bit is written to '1', a software capture to Capture register A (TCD.CAPTUREAL/H) is done as soon as the strobe is synchronized to the TCD domain.
Writing to this bit only has effect if there is no ongoing synchronization of a command. See also CMDRDY bit in TCD.STATUS.

Bit 2 – RESTART Restart Strobe
When this bit is written a Restart of the TCD counter is executed as soon as this bit is synchronized to the TCD domain.
Writing to this bit only has effect if there is no ongoing synchronization of a command. See also CMDRDY bit in TCD.STATUS.

Bit 1 – SYNC Synchronize Strobe
When this bit is written to '1' the doubled buffered registers will be loaded to the TCD domain as soon as this bit is synchronized to the TCD domain.
Writing to this bit only has effect if there is no ongoing synchronization of a command. See also CMDRDY bit in TCD.STATUS.

Bit 0 – SYNCEOC Synchronize End of TCD Cycle Strobe
When this bit is written to '1' the doubled buffered registers will be loaded to the TCD domain at the end of the next TCD cycle.
Writing to this bit only has effect if there is no ongoing synchronization of a command. See also CMDRDY bit in TCD.STATUS.

© 2019 Microchip Technology Inc.

22.5.6 Event Control x

Name: EVCTRL
Offset: 0x08 + n*0x01 [n=0..1]
Reset: 0x00
Property: -

Bit	7	6	5	4	3	2	1	0
	CFG[1:0]			EDGE		ACTION		TRIGEI
Access	R/W	R/W		R/W		R/W		R/W
Reset	0	0		0		0		0

Bits 7:6 – CFG[1:0] Event Configuration
When the Input Capture Noise canceler is activated (FILTERON), the Event input is filtered. The filter function requires four successive equal valued samples of the Retrigger pin for changing its output. The Input Capture is therefore delayed by four clock cycles when the noise canceler is enabled.
When the Asynchronous Event is enabled (ASYNCON), the Event input will qualify the output directly.

Value	Name	Description
0x0	NEITHER	Neither Filter nor Asynchronous Event is enabled.
0x1	FILTERON	Input Capture Noise Cancellation Filter enabled.
0x2	ASYNCON	Asynchronous Event output qualification enabled.
other	-	Reserved.

Bit 4 – EDGE Edge Selection
This bit is used to select the active edge or level for the event input.

Value	Name	Description
0	FALL_LOW	The falling edge or low level of the Event input generates Retrigger or Fault action.
1	RISE_HIGH	The rising edge or high level of the Event input generates Retrigger or Fault action.

Bit 2 – ACTION Event Action
This bit enables Capture on Event input. By default, the input will trigger a Fault, depending on the Input x register input mode (TCD.INPUTx). It is also possible to trigger a Capture on the Event input.

Value	Name	Description
0	FAULT	Event triggers a Fault.
1	CAPTURE	Event triggers a Fault and Capture.

Bit 0 – TRIGEI Trigger Event Input Enable
Writing this bit to '1' enables Event as trigger for input A.

22.5.7 Interrupt Control

Name: INTCTRL
Offset: 0x0C
Reset: 0x00
Property: -

Bit	7	6	5	4	3	2	1	0
					TRIGB	TRIGA		OVF
Access					R/W	R/W		R/W
Reset					0	0		0

Bits 2, 3 – TRIG Trigger x Interrupt Enable
Writing this bit to '1' enables executing an interrupt when trigger input x is received.

Bit 0 – OVF Counter Overflow
Writing this bit to '1' enables executing an interrupt at Restart of the sequence or Overflow of the counter.

22.5.8 Interrupt Flags

Name: INTFLAGS
Offset: 0x0D
Reset: 0x00
Property: -

Bit	7	6	5	4	3	2	1	0
					TRIGB	TRIGA		OVF
Access					R/W	R/W		R/W
Reset					0	0		0

Bits 2, 3 – TRIG Trigger x Interrupt Flag
When a capture has occurred, the TRIGA/B is raised. This bit is cleared by writing a '1' to it.

Bit 0 – OVF Overflow Interrupt Flag
When a capture is overflow, this flag is raised. This bit is cleared by writing a '1' to it.

22.5.9 Status

Name: STATUS
Offset: 0x0E
Reset: 0x00
Property: -

Bit	7	6	5	4	3	2	1	0
	PWMACTB	PWMACTA					CMDRDY	ENRDY
Access	R/W	R/W					R	R
Reset	0	0					0	0

Bits 6, 7 – PWMACT PWM Activity on x
This bit is set by hardware each time the output WO1 toggles from 0 to 1 or from 1 to 0.
This status bit must be cleared by software by writing a '1' to it before new PWM activity can be detected.

Bit 1 – CMDRDY Command Ready
This status bit tells when a command is synced to the TCD domain and the system is ready to receive new commands.
The following clears the CMDRDY bit:

1. TCD.CTRLE SYNCEOC strobe
2. TCD.CTRLE SYNC strobe
3. TCD.CTRLE RESTART strobe
4. TCD.CTRLE SCAPTUREA Capture A strobe
5. TCD.CTRLE SCAPTUREB Capture B strobe
6. TCD.CTRLC AUPDATE written to '1' and writing to TCD.CMPBCLRH register

Bit 0 – ENRDY Enable Ready
This status bit tells when the ENABLE value in TCD.CTRLA is synced to the TCD domain, and is ready to be written to again.
The following clears the ENRDY bit:

1. Writing to the ENABLE bit in (TCD.CTRLA
2. TCD.CTRLE DISEOC strobe
3. Going to break in an On-Chip Debugging (OCD) session with and the Debug Run bit (DBGCTRL) in TCD.DBGCTRL is not '1'

22.5.10 Input Control x

Name: INPUTCTRL
Offset: 0x10 + n*0x01 [n=0..1]
Reset: 0x00
Property: -

Bit	7	6	5	4	3	2	1	0
					INPUTMODE[3:0]			
Access					R/W	R/W	R/W	R/W
Reset					0	0	0	0

Bits 3:0 – INPUTMODE[3:0] Input Mode

Value	Name	Description
0x0	NONE	Input has no action
0x1	JMPWAIT	Stop output, jump to opposite compare cycle and wait
0x2	EXECWAIT	Stop output, execute opposite compare cycle and wait
0x3	EXECFAULT	Stop output, execute opposite compare cycle while fault active
0x4	FREQ	Stop all outputs, maintain frequency
0x5	EXECDT	Stop all outputs, execute dead time while fault active
0x6	WAIT	Stop all outputs, jump to next compare cycle and wait
0x7	WAITSW	Stop all outputs, wait for software action
0x8	EDGETRIG	Stop output on edge, jump to next compare cycle
0x9	EDGETRIGFREQ	Stop output on edge, maintain frequency
0xA	LVLTRIGFREQ	Stop output at level, maintain frequency

22.5.11 Fault Control

Name: FAULTCTRL
Offset: 0x12
Reset: Loaded from fuse
Property: Configuration Change Protection

Bit	7	6	5	4	3	2	1	0
	CMPDEN	CMPCEN	CMPBEN	CMPAEN	CMPD	CMPC	CMPB	CMPA
Access	R/W	R/W	R/W	R/W	R/W	R/W	R/W	R/W
Reset	x	x	x	x	x	x	x	x

Bits 4, 5, 6, 7 – CMPEN Compare x Enable
These bits enable Compare as output on pin. At reset the content is kept and during the reset sequence loaded from the TCD Configuration Fuse (FUSE.TCDFG).

Bits 0, 1, 2, 3 – CMP Compare Value x
These bits set the default state from Reset, or when a input Event triggers a Fault causing changes to the output. At reset the content is kept and during the reset sequence loaded from the TCD Configuration Fuse (FUSE.TCDFG).

22.5.12 Delay Control

Name: DLYCTRL
Offset: 0x14
Reset: 0x00
Property: -

Bit	7	6	5	4	3	2	1	0
			DLYPRESC[1:0]		DLYTRIG[1:0]		DLYSEL[1:0]	
Access			R/W	R/W	R/W	R/W	R/W	R/W
Reset			0	0	0	0	0	0

Bits 5:4 – DLYPRESC[1:0] Delay Prescaler
These bits control the prescaler settings for the blanking or output event delay.

Value	Description
0x0	Prescaler division factor 1
0x1	Prescaler division factor 2
0x2	Prescaler division factor 4
0x3	Prescaler division factor 8

Bits 3:2 – DLYTRIG[1:0] Delay Trigger
These bits control what should trigger the blanking or output event delay.

Value	Name	Description
0x0	CMPASET	CMPASET triggers delay
0x1	CMPACLR	CMPACLR triggers delay
0x2	CMPBSET	CMPBSET triggers delay
0x3	CMPBCLR	CMPASET triggers delay (end of cycle)

Bits 1:0 – DLYSEL[1:0] Delay Select
These bits control what function should be used by the delay trigger the blanking or output event delay.

Value	Description
0x0	Delay functionality not used
0x1	Input blanking enabled
0x2	Event delay enabled
0x3	Reserved

22.5.13 Delay Value

Name: DLYVAL
Offset: 0x15
Reset: 0x00
Property: -

Bit	7	6	5	4	3	2	1	0
	DLYVAL[7:0]							
Access	R/W	R/W	R/W	R/W	R/W	R/W	R/W	R/W
Reset	0	0	0	0	0	0	0	0

Bits 7:0 – DLYVAL[7:0] Delay Value
These bits configure the blanking/ output event delay time or event output synchronization delay in number of prescaled TCD cycles.

22.5.14 Dither Control

Name: DITCTRL
Offset: 0x18
Reset: 0x00
Property: -

Bit	7	6	5	4	3	2	1	0
							DITHERSEL[1:0]	
Access							R/W	R/W
Reset							0	0

Bits 1:0 – DITHERSEL[1:0] Dither Select
These bits select which Compare register is using the dither function. See also 22.3.2.5 Dithering.

Value	Name	Description
0x0	ONTIMEB	On-time ramp B
0x1	ONTIMEAB	On-time ramp A and B
0x2	DEADTIMEB	Dead-time ramp B
0x3	DEADTIMEAB	Dead-time ramp A and B

22.5.15 Dither Value

Name: DITVAL
Offset: 0x19
Reset: 0x00
Property: -

Bit	7	6	5	4	3	2	1	0
					DITHER[3:0]			
Access					R/W	R/W	R/W	R/W
Reset					0	0	0	0

Bits 3:0 – DITHER[3:0] Dither Value
These bits configure the fractional adjustment of the on-time or off-time according to Dither Selection bits (DITHERSEL) in the Dither Control register (TCD.DITCTRL). The DITHER value is added to a 4-bit accumulator at the end of each TCD cycle. When the accumulator overflows the frequency adjustment will occur.
The DITHER bits are doubled buffered so the new value is copied in at an update condition.

22.5.16 Debug Control

Name: DBGCTRL
Offset: 0x1E
Reset: 0x00
Property: -

Bit	7	6	5	4	3	2	1	0
						FAULTDET		DBGRUN
Access						R/W		R/W
Reset						0		0

Bit 2 – FAULTDET Fault Detection
This bit defines how the peripheral behaves when stopped in Debug mode.

Value	Name	Description
0	NONE	No fault is generated if TCD is stopped in Debug mode.
1	FAULT	A fault is generated and both trigger flags are set if TCD is halted in Debug mode.

Bit 0 – DBGRUN Debug Run
When written to '1', the peripheral will continue operating in debug mode when the CPU is halted.

Value	Description
0	The peripheral is halted in break debug mode and ignores events.
1	The peripheral will continue to run in break debug mode when the CPU is halted.

22.5.17 Capture x

Name: CAPTURE
Offset: 0x22 + n*0x02 [n=0..1]
Reset: 0x00
Property: -

For capture operation, these registers constitute the second buffer level and access point for the CPU. The TCD.CAPTUREx registers are updated with the buffer value when an UPDATE condition occurs. CAPTURE A register contains the value from the TCD counter when a Trigger A or a software capture A occurs. CAPTURE B register contain the value from the TCD counter when Trigger B or software capture B occurs.

The TCD counter value is synchronized to CAPTUREx by either software or an event.

The capture register is blocked for update of new capture data until TCDn.CAPTUREXH is read.

Bit	15	14	13	12	11	10	9	8
					CAPTURE[11:8]			
Access					R	R	R	R
Reset					0	0	0	0

Bit	7	6	5	4	3	2	1	0
	CAPTURE[7:0]							
Access	R	R	R	R	R	R	R	R
Reset	0	0	0	0	0	0	0	0

Bits 11:0 – CAPTURE[11:0] Capture Byte

22.5.18 Compare Set x

Name: CMPSET
Offset: 0x28 + n*0x04 [n=0..1]
Reset: 0x00
Property: -

For compare operation, these registers are continuously compared to the counter value. Normally, the outputs form the comparators are then used for generating waveforms.

Bit	15	14	13	12	11	10	9	8
					CMPSET[11:8]			
Access					R/W	R/W	R/W	R/W
Reset					0	0	0	0

Bit	7	6	5	4	3	2	1	0
	CMPSET[7:0]							
Access	R/W	R/W	R/W	R/W	R/W	R/W	R/W	R/W
Reset	0	0	0	0	0	0	0	0

Bits 11:0 – CMPSET[11:0] Compare Set
These bits hold value of the compare register.

22.5.19 Compare Clear x

Name: CMPCLR
Offset: 0x2A + n*0x04 [n=0..1]
Reset: 0x00
Property: -

For compare operation, these registers are continuously compared to the counter value. Normally, the outputs form the comparators are then used for generating waveforms.

Bit	15	14	13	12	11	10	9	8
					CMPCLR[11:8]			
Access					R/W	R/W	R/W	R/W
Reset					0	0	0	0

Bit	7	6	5	4	3	2	1	0
	CMPCLR[7:0]							
Access	R/W	R/W	R/W	R/W	R/W	R/W	R/W	R/W
Reset	0	0	0	0	0	0	0	0

Bits 11:0 – CMPCLR[11:0] Compare x Clear
These bits hold the value of the compare register.

23. RTC - Real Time Counter

23.1 Features

- 16-bit resolution
- Selectable clock source
  - 32.768kHz external crystal (XOSC32K)
  - External clock
  - 32KHz internal ULP oscillator (OSCULP32K)
  - OSCULP32K divided by 32
- Programmable 15-bit clock prescaling
- One compare register
- One period register
- Clear timer on period overflow
- Optional interrupt/Event on overflow and compare match
- Periodic interrupt and Event

23.2 Overview

The RTC peripheral offers two timing functions: the Real-Time Counter (RTC) and a Periodic Interrupt Timer (PIT).

The PIT functionality can be enabled independent of the RTC functionality.

RTC - Real-Time Counter

The RTC counts (prescaled) clock cycles in a Counter register, and compares the content of the Counter register to a Period register and a Compare register.

The RTC can generate both interrupts and Events on compare match or overflow. It will generate a compare interrupt and/or Event at the first count after the counter equals the Compare register value, and an overflow interrupt and/or Event at the first count after the counter value equals the Period register value. The overflow will also reset the Counter value to zero.

The RTC peripheral typically runs continuously, including in low-power sleep modes, to keep track of time. It can wake up the device from sleep modes and/or interrupt the device at regular intervals.

The reference clock is typically the 32.768kHz output from an external crystal. The RTC can also be clocked from an external clock signal, the 32KHz internal Ultra-Low Power oscillator (OSCULP32K), or the OSCULP32K divided by 32.

The RTC peripheral includes a 15-bit programmable prescaler that can scale down the reference clock before it reaches the counter. A wide range of resolutions and time-out periods can be configured for the RTC. With a 32.768kHz clock source, the maximum resolution is 30.5µs, and time-out periods can be up to 2 seconds. With a resolution of 1s, the maximum time-out period is more than 18 hours (65536 seconds). The RTC can give a compare interrupt and/or Event when the counter equals the compare register value, and an overflow interrupt and/or Event when it equals the period register value.

PIT - Periodic Interrupt Timer

Using the same clock source as the RTC function, the PIT can request an interrupt or trigger an output Event on every *n*-th clock period. *n* can be selected from {4, 8, 16,.. 32768} for interrupts, and from {64, 128, 256,... 8192} for Events.

The PIT uses the same clock source (CLK_RTC) as the RTC function .

Related Links

23.3 RTC Functional Description
23.4 PIT Functional Description

23.2.1 Block Diagram

Figure 23-1. Block Diagram

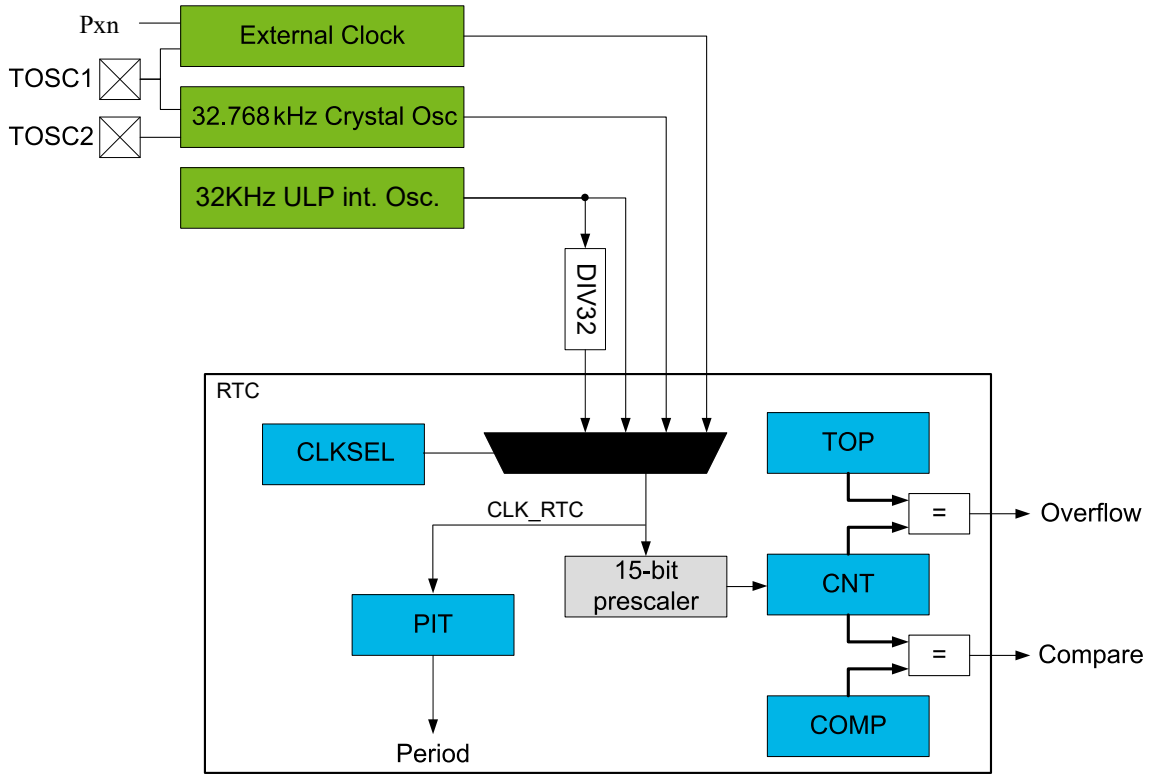

23.2.2 Signal Description

Not applicable.

23.2.3 System Dependencies

In order to use this peripheral, other parts of the system must be configured correctly, as described below.

Table 23-1. RTC System Dependencies

Dependency	Applicable	Peripheral
Clocks	Yes	CLKCTRL
I/O Lines and Connections	Yes	PORT
Interrupts	Yes	CPUINT
Events	Yes	EVSYS
Debug	Yes	UPDI

Related Links

23.2.3.1 Clocks
23.2.3.2 I/O Lines and Connections
23.2.3.5 Debug Operation
23.2.3.3 Interrupts
23.2.3.4 Events

23.2.3.1 Clocks

System clock (CLK_PER) is required to be at least four times faster than RTC clock (CLK_RTC) for reading counter value, and this is regardless of the RTC_PRESC setting.

Related Links

10. CLKCTRL - Clock Controller

23.2.3.2 I/O Lines and Connections

A 32.768kHz crystal can be connected to the TOSC1 or TOSC2 pins, along with any required load capacitors.

An external clock can be used on the TOSC1 pin.

Related Links

10. CLKCTRL - Clock Controller
34. Electrical Characteristics

23.2.3.3 Interrupts

Using the interrupts of this peripheral requires the Interrupt Controller to be configured first.

Related Links

13. CPUINT - CPU Interrupt Controller
8.7.3 SREG
23.6 Interrupts

23.2.3.4 Events

The events of this peripheral are connected to the Event System.

Related Links

14. EVSYS - Event System

23.2.3.5 Debug Operation

When run-time debugging, this peripheral will continue normal operation. Halting the CPU in debugging mode will halt normal operation of the peripheral.

This peripheral can be forced to operate with halted CPU by writing a '1' to the Debug Run bit (DBGRUN) in the Debug Control register of the peripheral (*peripheral*.DBGCTRL).

Related Links

33. UPDI - Unified Program and Debug Interface

23.3 RTC Functional Description

The RTC peripheral offers two timing functions: the Real-Time Counter (RTC) and a Periodic Interrupt Timer (PIT). This subsection describes the RTC.

Related Links

23.4 PIT Functional Description

23.3.1 Initialization

To operate the RTC, the source clock for the RTC counter must be configured before enabling the RTC peripheral, and the desired actions (interrupt requests, output Events).

Related Links

10. CLKCTRL - Clock Controller
23.4 PIT Functional Description

23.3.1.1 Configure the clock CLK_RTC

To configure CLK_RTC, follow these steps:

1. Configure the desired oscillator to operate as required, in the Clock Controller peripheral (CLKCTRL).
2. Write the Clock Select bits (CLKSEL) in the Clock Selection register (RTC.CLKSEL) accordingly.

The CLK_RTC clock configuration is used by both RTC and PIT functionality.

23.3.1.2 Configure RTC

To operate the RTC, follow these steps:

1. Configure the RTC-internal prescaler by writing the PRESCALER bit field in the Control A register (RTC.CTRLA).
2. Set the Compare value in the Compare register (RTC.CMP), and/or the Overflow value in the Top register (RTC.PER).
3. Enable the desired Interrupts by writing to the respective Interrupt Enable bits (CMP, OVF) in the Interrupt Control register (RTC.INTCTRL).
4. Enable the RTC by writing a '1' to the RTC Enable bit (RTCEN) in the Control A register (RTC.CTRLA).

23.3.2 Operation - RTC

23.3.2.1 Enabling, Disabling, and Resetting

The RTC is enabled by setting the Enable bit in the Control A register (CTRLA.ENABLE=1). The RTC is disabled by writing CTRLA.ENABLE=0.

23.4 PIT Functional Description

The RTC peripheral offers two timing functions: the Real-Time Counter (RTC) and a Periodic Interrupt Timer (PIT). This subsection describes the PIT.

Related Links

23.3 RTC Functional Description

23.4.1 Initialization

To operate the PIT, follow these steps:

1. Configure the RTC clock CLK_RTC as described in 23.3.1.1 Configure the clock CLK_RTC.
2. Select the period for the interrupt by writing the PERIOD bit field in the PIT Control A register (RTC.PITCTRLA).
3. Enable the interrupt by writing a '1' to the Periodic Interrupt bit (PI) in the PIT Interrupt Control register (RTC.PITINTCTRL).
4. Enable the PIT by writing a '1' to the PIT Enable bit (PITENABLE) in the PIT Control A register (RTC.PITCTRLA).

23.4.2 Operation - PIT

23.4.2.1 Enabling, Disabling, and Resetting

The PIT is enabled by setting the Enable bit in the PIT Control A register (RTC_PITCTRLA.PITEN=1). The PIT is disabled by writing RTC_PITCTRLA.PITEN=0.

23.5 Events

The RTC, when enabled, will generate the following output Events:

- Overflow (OVF): Generated when the counter has reached its top value and wrapped to zero.
- Compare (CMP): Indicates a match between the counter value and the compare register.

The PIT, when enabled, will generate the following output Events:

- Event 0: 8192 RTC clock periods interval.
- Event 1: 4096 RTC clock periods interval.

- Event 2: 2048 RTC clock periods interval.
- Event 3: 1024 RTC clock periods interval.
- Event 4: 512 RTC clock periods interval.
- Event 5: 256 RTC clock periods interval.
- Event 6: 128 RTC clock periods interval.
- Event 7: 64 RTC clock periods interval.

The Event users are configured by the Event System (EVSYS).

Related Links

14. EVSYS - Event System

23.6 Interrupts

Table 23-2. Available Interrupt Vectors and Sources

Offset	Name	Vector Description	Conditions
0x00	RTC	Real-time counter overflow and compare match interrupt	• Overflow (OVF): The counter has reached its top value and wrapped to zero. • Compare (CMP): Match between the counter value and the compare register.
0x02	PIT	Periodic Interrupt Timer interrupt	A time period has passed, as configured in RTC_PITCTRLA.PERIOD.

When an interrupt condition occurs, the corresponding Interrupt Flag is set in the Interrupt Flags register of the peripheral (*peripheral*.INTFLAGS).

An interrupt source is enabled or disabled by writing to the corresponding enable bit in the peripheral's Interrupt Control register (*peripheral*.INTCTRL).

An interrupt request is generated when the corresponding interrupt source is enabled and the Interrupt Flag is set. The interrupt request remains active until the Interrupt Flag is cleared. See the peripheral's INTFLAGS register for details on how to clear Interrupt Flags.

Related Links

13. CPUINT - CPU Interrupt Controller
23.11.3 INTCTRL
23.11.13 PITINTCTRL

23.7 Sleep Mode Operation

The RTC will continue to operate in Idle sleep mode. It will run in Standby sleep mode if RTC.CTRLA.RUNSTDBY is set.

The PIT will continue to operate in any sleep mode.

Related Links

23.11.1 CTRLA

23.8 Synchronization

Both the RTC and the PIT are asynchronous, operating from a different clock source (CLK_RTC) independently of the main clock (CLK_PER). For control and count register updates, it will take a number of RTC clock and/or peripheral clock cycles before an updated register value is available in a register or until a configuration change has effect on the RTC or PIT, respectively. This synchronization time is described for each register in the Register Description.

For some RTC registers, a Synchronization Busy flag is available (CMPBUSY, PERBUSY, CNTBUSY, CTRLABUSY) in the Status register (RTC.STATUS).

For the RTC.PITCTRLA register, a Synchronization Busy flag (SYNCBUSY) is available in the PIT Status register (RTC.PITSTATUS).

Check for busy should be performed before writing to the mentioned registers.

Related Links

10. CLKCTRL - Clock Controller

23.9 Configuration Change Protection

Not applicable.

23.10 Register Summary - RTC

Offset	Name	Bit Pos.								
0x00	CTRLA	7:0	RUNSTDBY	PRESCALER[3:0]						RTCEN
0x01	STATUS	7:0					CMPBUSY	PERBUSY	CNTBUSY	CTRLABUSY
0x02	INTCTRL	7:0							CMP	OVF
0x03	INTFLAGS	7:0							CMP	OVF
0x04	TEMP	7:0	TEMP[7:0]							
0x05	DBGCTRL	7:0								DBGRUN
0x06	Reserved									
0x07	CLKSEL	7:0							CLKSEL[1:0]	
0x08	CNT	7:0	CNT[7:0]							
		15:8	CNT[15:8]							
0x0A	PER	7:0	PER[7:0]							
		15:8	PER[15:8]							
0x0C	CMP	7:0	CMP[7:0]							
		15:8	CMP[15:8]							
0x0E ... 0x0F	Reserved									
0x10	PITCTRLA	7:0		PERIOD[3:0]						PITEN
0x11	PITSTATUS	7:0								CTRLBUSY
0x12	PITINTCTRL	7:0								PI
0x13	PITINTFLAGS	7:0								PI
0x14	Reserved									
0x15	PITDBGCTRL	7:0								DBGRUN

23.11 Register Description

23.11.1 Control A

Name: CTRLA
Offset: 0x00
Reset: 0x00
Property: -

Bit	7	6	5	4	3	2	1	0
	RUNSTDBY	PRESCALER[3:0]						RTCEN
Access	R/W	R/W	R/W	R/W	R/W	R	R	R/W
Reset	0	0	0	0	0	0	0	0

Bit 7 – RUNSTDBY Run in Standby

Value	Description
0	RTC disabled in Standby sleep mode
1	RTC enabled in Standby sleep mode

Bits 6:3 – PRESCALER[3:0] Prescaler
These bits define the prescaling of the CLK_RTC clock signal. Due to synchronization between the RTC clock and system clock domains, there is a latency of two RTC clock cycles from updating the register until this has an effect. Application software needs to check that the STATUS.CTRLABUSY flag is cleared before writing to this register.

Value	Name	Description
0x0	DIV1	RTC clock / 1 (no prescaling)
0x1	DIV2	RTC clock / 2
0x2	DIV4	RTC clock / 4
0x3	DIV8	RTC clock / 8
0x4	DIV16	RTC clock / 16
0x5	DIV32	RTC clock / 32
0x6	DIV64	RTC clock / 64
0x7	DIV128	RTC clock / 128
0x8	DIV256	RTC clock / 256
0x9	DIV512	RTC clock / 512
0xA	DIV1024	RTC clock / 1024
0xB	DIV2048	RTC clock / 2048
0xC	DIV4096	RTC clock / 4096
0xD	DIV8192	RTC clock / 8192
0xE	DIV16384	RTC clock / 16384
0xF	DIV32768	RTC clock / 32768

Bit 0 – RTCEN RTC Enable

Value	Description
0	RTC disabled
1	RTC enabled

23.11.2 Status

Name: STATUS
Offset: 0x01
Reset: 0x00
Property: -

Bit	7	6	5	4	3	2	1	0
					CMPBUSY	PERBUSY	CNTBUSY	CTRLABUSY
Access	R	R	R	R	R	R	R	R
Reset	0	0	0	0	0	0	0	0

Bit 3 – CMPBUSY Compare Synchronization Busy
This bit is indicating whether the RTC is busy synchronizing the Compare register (RTC.CMP) in RTC clock domain.

Bit 2 – PERBUSY Period Synchronization Busy
This bit is indicating whether the RTC is busy synchronizing the Period register (RTC.PER) in RTC clock domain.

Bit 1 – CNTBUSY Counter Synchronization Busy
This bit is indicating whether the RTC is busy synchronizing the Count register (RTC.CNT) in RTC clock domain.

Bit 0 – CTRLABUSY Control A Synchronization Busy
This bit is indicating whether the RTC is busy synchronizing the Control A register (RTC.CTRLA) in RTC clock domain.

© 2019 Microchip Technology Inc.

23.11.3 Interrupt Control

Name: INTCTRL
Offset: 0x02
Reset: 0x00
Property: -

Bit	7	6	5	4	3	2	1	0
							CMP	OVF
Access	R	R	R	R	R	R	R/W	R/W
Reset	0	0	0	0	0	0	0	0

Bit 1 – CMP Compare Match Interrupt Enable
Enable interrupt on compare match, i.e. when the Counter value (RTC.CNT) matches the Compare value (RTC.CMP).

Bit 0 – OVF Overflow Interrupt Enable
Enable interrupt on counter overflow, i.e. when the Counter value (RTC.CNT) matched the Period value (RTC.PER) and wraps around to zero.

23.11.4 Interrupt Flag

Name: INTFLAGS
Offset: 0x03
Reset: 0x00
Property: -

Bit	7	6	5	4	3	2	1	0
							CMP	OVF
Access	R	R	R	R	R	R	R	R
Reset	0	0	0	0	0	0	0	0

Bit 1 – CMP Compare Match Interrupt Flag
This flag is set when the Counter value (RTC.CNT) matches the Compare value (RTC.CMP).
Writing a '1' to this bit clears the flag.

Bit 0 – OVF Overflow Interrupt Flag
This flag is set when the Counter value (RTC.CNT) has reached the Period value (RTC.PER) and wrapped to zero.
Writing a '1' to this bit clears the flag.

23.11.5 Temporary

Name: TEMP
Offset: 0x4
Reset: 0x00
Property: -

The Temporary register is used by the CPU for single-cycle, 16-bit access to the 16-bit registers of this peripheral. It can also be read and written by software. See also 8.5.6 Accessing 16-bit Registers. There is one common Temporary register for all the 16-bit registers of this peripheral.

Bit	7	6	5	4	3	2	1	0
	TEMP[7:0]							
Access	R/W	R/W	R/W	R/W	R/W	R/W	R/W	R/W
Reset	0	0	0	0	0	0	0	0

Bits 7:0 – TEMP[7:0] Temporary

23.11.6 Debug Control

Name: DBGCTRL
Offset: 0x05
Reset: 0x00
Property: -

Bit	7	6	5	4	3	2	1	0
								DBGRUN
Access								R/W
Reset								0

Bit 0 – DBGRUN Debug Run

Value	Description
0	The peripheral is halted in break debug mode and ignores events.
1	The peripheral will continue to run in break debug mode when the CPU is halted.

23.11.7 Clock Selection

Name: CLKSEL
Offset: 0x07
Reset: 0x00
Property: -

Bit	7	6	5	4	3	2	1	0
							CLKSEL[1:0]	
Access	R	R	R	R	R	R	R/W	R/W
Reset	0	0	0	0	0	0	0	0

Bits 1:0 – CLKSEL[1:0] Clock Select
Writing these bits selects the source for the RTC clock (CLK_RTC).
When configuring the RTC to use either XOSC32K or the external clock on TOSC1, XOSC32K needs to be enabled and the Source Select bit (SEL) and Run Standby bit (RUNSTDBY) in the XOSC32K Control A register of the Clock Controller (CLKCTRL.XOSC32KCTRLA) must be configured accordingly.

Value	Description
0x0	32KHz from OSCULP32K
0x1	1KHz from OSCULP32K
0x2	32.768kHz from XOSC32K
0x3	External clock from TOSC1 pin

23.11.8 Count

Name: CNT
Offset: 0x08
Reset: 0x00
Property: -

The RTC.CNTL and RTC.CNTH register pair represents the 16-bit value, RTC.CNT. The low byte [7:0] (suffix L) is accessible at the original offset. The high byte [15:8] (suffix H) can be accessed at offset + 0x01. For more details on reading and writing 16-bit registers, refer to 8.5.6 Accessing 16-bit Registers.

Due to synchronization between the RTC clock and system clock domains, there is a latency of two RTC clock cycles from updating the register until this has an effect. Application software needs to check that the STATUS.CNTBUSY flag is cleared before writing to this register.

Bit	15	14	13	12	11	10	9	8
	CNT[15:8]							
Access	R/W	R/W	R/W	R/W	R/W	R/W	R/W	R/W
Reset	0	0	0	0	0	0	0	0

Bit	7	6	5	4	3	2	1	0
	CNT[7:0]							
Access	R/W	R/W	R/W	R/W	R/W	R/W	R/W	R/W
Reset	0	0	0	0	0	0	0	0

Bits 15:8 – CNT[15:8] Counter high byte
These bits hold the MSB of the 16-bit counter register.

Bits 7:0 – CNT[7:0] Counter low byte
These bits hold the LSB of the 16-bit counter register.

23.11.9 Period

Name: PER
Offset: 0x0A
Reset: 0xFF
Property: -

The RTC.PERL and RTC.PERH register pair represents the 16-bit value, RTC.PER. The low byte [7:0] (suffix L) is accessible at the original offset. The high byte [15:8] (suffix H) can be accessed at offset + 0x01. For more details on reading and writing 16-bit registers, refer to 8.5.6 Accessing 16-bit Registers.

Due to synchronization between the RTC clock and system clock domains, there is a latency of two RTC clock cycles from updating the register until this has an effect. Application software needs to check that the STATUS.PERBUSY flag is cleared before writing to this register.

Bit	15	14	13	12	11	10	9	8
	PER[15:8]							
Access	R/W	R/W	R/W	R/W	R/W	R/W	R/W	R/W
Reset	1	1	1	1	1	1	1	1

Bit	7	6	5	4	3	2	1	0
	PER[7:0]							
Access	R/W	R/W	R/W	R/W	R/W	R/W	R/W	R/W
Reset	1	1	1	1	1	1	1	1

Bits 15:8 – PER[15:8] Period high byte
These bits hold the MSB of the 16-bit period register.

Bits 7:0 – PER[7:0] Period low byte
These bits hold the LSB of the 16-bit period register.

23.11.10 Compare

Name: CMP
Offset: 0x0C
Reset: 0x00
Property: -

The RTC.CMPL and RTC.CMPH register pair represents the 16-bit value, RTC.CMP. The low byte [7:0] (suffix L) is accessible at the original offset. The high byte [15:8] (suffix H) can be accessed at offset + 0x01. For more details on reading and writing 16-bit registers, refer to 8.5.6 Accessing 16-bit Registers.

Bit	15	14	13	12	11	10	9	8
	CMP[15:8]							
Access	R/W	R/W	R/W	R/W	R/W	R/W	R/W	R/W
Reset	0	0	0	0	0	0	0	0

Bit	7	6	5	4	3	2	1	0
	CMP[7:0]							
Access	R/W	R/W	R/W	R/W	R/W	R/W	R/W	R/W
Reset	0	0	0	0	0	0	0	0

Bits 15:8 – CMP[15:8] Compare high byte
These bits hold the MSB of the 16-bit compare register.

Bits 7:0 – CMP[7:0] Compare low byte
These bits hold the LSB of the 16-bit compare register.

23.11.11 Periodic Interrupt Timer Control A

Name: PITCTRLA
Offset: 0x10
Reset: 0x00
Property: -

Bit	7	6	5	4	3	2	1	0
		PERIOD[3:0]						PITEN
Access	R	R/W	R/W	R/W	R/W	R	R	R/W
Reset	0	0	0	0	0	0	0	0

Bits 6:3 – PERIOD[3:0] Period
Writing this bit field selects the number of RTC clock cycles between each interrupt.

Value	Name	Description
0x0	OFF	No interrupt
0x1	CYC4	4 cycles
0x2	CYC8	8 cycles
0x3	CYC16	16 cycles
0x4	CYC32	32 cycles
0x5	CYC64	64 cycles
0x6	CYC128	128 cycles
0x7	CYC256	256 cycles
0x8	CYC512	512 cycles
0x9	CYC1024	1024 cycles
0xA	CYC2048	2048 cycles
0xB	CYC4096	4096 cycles
0xC	CYC8192	8192 cycles
0xD	CYC16384	16384 cycles
0xE	CYC32768	32768 cycles
0xF	-	Reserved

Bit 0 – PITEN Periodic Interrupt Timer Enable
Writing a '1' to this bit enables the Periodic Interrupt Timer.

23.11.12 Periodic Interrupt Timer Status

Name: PITSTATUS
Offset: 0x11
Reset: 0x00
Property: -

Bit	7	6	5	4	3	2	1	0
								CTRLBUSY
Access		R	R	R	R	R	R	R
Reset		0	0	0	0	0	0	0

Bit 0 – CTRLBUSY PITCTRLA Synchronization Busy
This bit indicates whether the RTC is busy synchronizing the Periodic Interrupt Timer Control A register (RTC.PITCTRLA) in the RTC clock domain.

23.11.13 PIT Interrupt Control

Name: PITINTCTRL
Offset: 0x12
Reset: 0x00
Property: -

Bit	7	6	5	4	3	2	1	0
								PI
Access		R	R	R	R	R	R	R/W
Reset		0	0	0	0	0	0	0

Bit 0 – PI Periodic interrupt

Value	Description
0	The periodic interrupt is disabled
1	The periodic interrupt is enabled

23.11.14 PIT Interrupt Flag

Name: PITINTFLAGS
Offset: 0x13
Reset: 0x00
Property: -

Bit	7	6	5	4	3	2	1	0
								PI
Access		R	R	R	R	R	R	R
Reset		0	0	0	0	0	0	0

Bit 0 – PI Periodic interrupt Flag
This flag is set when a periodic interrupt is issued.
Writing a '1' clears the flag.

23.11.15 Periodic Interrupt Timer Debug Control

Name: PITDBGCTRL
Offset: 0x15
Reset: 0x00
Property: -

Bit	7	6	5	4	3	2	1	0
								DBGRUN
Access								R/W
Reset								0

Bit 0 – DBGRUN Debug Run
Writing this bit to '1' will enable the PIT to run in Debug mode while the CPU is halted.

Value	Description
0	The peripheral is halted in break debug mode and ignores events.
1	The peripheral will continue to run in break debug mode when the CPU is halted.

24. USART - Universal Synchronous and Asynchronous Receiver and Transmitter

24.1 Features

- Full-duplex or one-wire half-duplex operation
- Asynchronous or synchronous operation
  - Synchronous clock rates up to 1/2 of the device clock frequency
  - Asynchronous clock rates up to 1/8 of the device clock frequency
- Supports serial frames with:
  - 5, 6, 7, 8, or 9 data bits
  - Optionally even and odd parity bits
  - 1 or 2 stop bits
- Fractional baud rate generator
  - Can generate desired baud rate from any system clock frequency
  - No need for external oscillator with certain frequencies
- Built-in error detection and correction schemes
  - Odd or even parity generation and parity check
  - Data overrun and framing error detection
  - Noise filtering includes false start bit detection and digital low-pass filter
- Separate interrupts for
  - Transmit complete
  - Transmit Data Register empty
  - Receive complete
- Multiprocessor communication mode
  - Addressing scheme to address a specific devices on a multi-device bus
  - Enable unaddressed devices to automatically ignore all frames
- Start Frame detection in UART mode
- Master SPI mode
  - Double buffered operation
  - Configurable data order
  - Operation up to 1/2 of the peripheral clock frequency
- IRCOM module for IrDA compliant pulse modulation/demodulation
- LIN slave support
  - Auto-baud and Break character detection
- RS-485 support

24.2 Overview

The Universal Synchronous and Asynchronous serial Receiver and Transmitter (USART) peripheral is a fast and flexible serial communication module. The USART supports full duplex communication, asynchronous and synchronous operation, and one-wire configurations. The USART can be set in SPI Master mode and used for SPI communication.

The USART uses three communication lines for data transfer:

- RxD for receiving
- TxD for transmitting
- XCK for the transmission clock in synchronous operation

Communication is frame based, and the frame format can be customized to support a wide range of standards. One frame can be directly followed by a new frame, or the communication line can return to the idle (high) state. A serial frame consists of:

- 1 Start bit
- 5, 6, 7, 8, or 9 data bits (MSb or LSb first)
- Parity bit: Even, odd, or none
- 1 or 2 Stop bits

The USART is buffered in both directions, enabling continued data transmission without any delay between frames. Separate interrupts for receive and transmit completion allow fully interrupt driven communication. Frame error and buffer overflow are detected in hardware and indicated with separate status flags. Even or odd parity generation and parity check can also be enabled.

The main functional blocks are the clock generator, the transmitter, and the receiver:

- The clock generator includes a fractional Baud Rate Generator that is able to generate a wide range of USART baud rates from any system clock frequencies. This removes the need to use an oscillator with a specific frequency to achieve a required baud rate. It also supports external clock input in synchronous slave operation.
- The transmitter consists of a single write buffer (DATA), a shift register, and a parity generator. The write buffer allows continuous data transmission without any delay between frames.
- The receiver consists of a two-level receive buffer (DATA) and a Shift register. Data and clock recovery units ensure robust synchronization and noise filtering during asynchronous data reception. It includes frame error, buffer overflow, and parity error detection.

When the USART is set in one-wire mode, the transmitter and the receiver share the same TxD I/O pin.

When the USART is set in Master SPI mode, all USART-specific logic is disabled, leaving the transmit and receive buffers, Shift registers, and Baud Rate Generator enabled. Pin control and interrupt generation are identical in both modes. The registers are used in both modes, but their functionality differs for some control settings.

An IRCOM module can be enabled for one USART to support IrDA 1.4 physical compliant pulse modulation and demodulation for baud rates up to 115.2 kbps.

The USART can be linked to the Configurable Custom Logic unit (CCL). When used with the CCL, the TxD/RxD data can be encoded/decoded before the signal is fed into the USART receiver or after the signal is output from the transmitter when the USART is connected to CCL LUT outputs.

This device provides one instance of the USART peripheral, USART0.

Related Links

28. CCL – Configurable Custom Logic

24.2.1 Signal Description

Signal	Type	Description
RxD	Input	Receiving line
TxD	Input/Output	Transmitting line
XCK	Input/output	Clock for synchronous operation
XDIR	Output	Transmit Enable for RS485

Related Links

5. I/O Multiplexing and Considerations

24.2.2 System Dependencies

In order to use this peripheral, other parts of the system must be configured correctly, as described below.

Table 24-1. USART System Dependencies

Dependency	Applicable	Peripheral
Clocks	Yes	CLKCTRL
I/O Lines and Connections	Yes	PORT
Interrupts	Yes	CPUINT
Events	Yes	EVSYS
Debug	Yes	UPDI

Related Links

24.2.2.5 Debug Operation
24.2.2.1 Clocks
24.2.2.2 I/O Lines and Connections
24.2.2.3 Interrupts
24.2.2.4 Events

24.2.2.1 Clocks

This peripheral depends on the peripheral clock.

Related Links

10. CLKCTRL - Clock Controller

24.2.2.2 I/O Lines and Connections

Using the I/O lines of the peripheral requires configuration of the I/O pins.

Related Links

16. PORT - I/O Pin Configuration
5. I/O Multiplexing and Considerations

24.2.2.3 Interrupts

Using the interrupts of this peripheral requires the Interrupt Controller to be configured first.

Related Links

13. CPUINT - CPU Interrupt Controller
8.7.3 SREG
24.3.4 Interrupts

24.2.2.4 Events

The events of this peripheral are connected to the Event System.

Related Links

14. EVSYS - Event System

24.2.2.5 Debug Operation

When the CPU is halted in debug mode, this peripheral will continue normal operation. If the peripheral is configured to require periodical service by the CPU through interrupts or similar, improper operation or data loss may result during debugging. This peripheral can be forced to halt operation during debugging.

Related Links

33. UPDI - Unified Program and Debug Interface

24.2.2.6 Block Diagram

Figure 24-1. USART Block Diagram

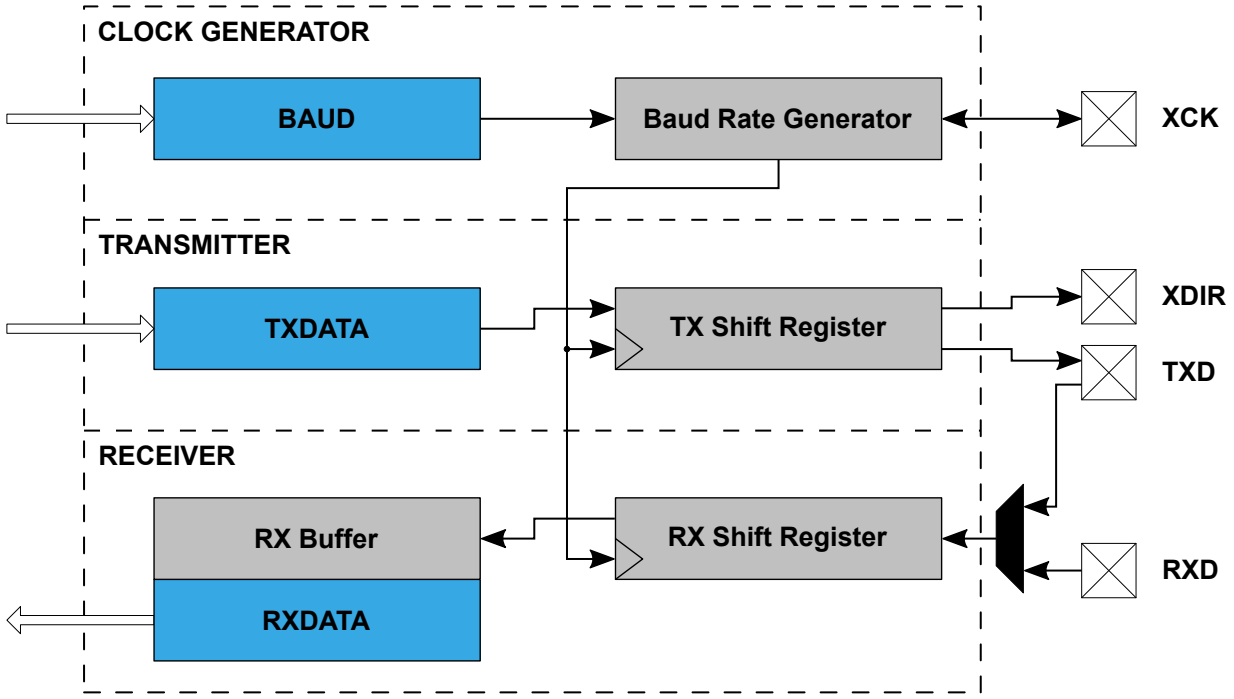

24.3 Functional Description

24.3.1 Initialization

For setting the USART in full-duplex mode, the following initialization sequence is recommended:

1. Set the TxD pin value high, and optionally set the XCK pin low (OUT[n] in PORT.OUT).
2. Set the TxD and optionally the XCK pin as output (DIR[n] in PORT.DIR).
3. Set the baud rate (USART.BAUD) and frame format.
4. Set the mode of operation (enables XCK pin output in synchronous mode).
5. Enable the transmitter or the receiver, depending on the usage.

For interrupt-driven USART operation, global interrupts should be disabled during the initialization.

Before doing a re-initialization with a changed baud rate or frame format, be sure that there are no ongoing transmissions while the registers are changed.

For setting the USART in one-wire mode, the following initialization sequence is recommended:

1. Set the TxD/RxD pin value high, and optionally set the XCK pin low.
2. Optionally, write the ODME bit in the USART.CTRLB register to '1' for Wired-AND functionality.
3. Set the TxD/RxD and optionally the XCK pin as output.
4. Select the baud rate and frame format.
5. Select the mode of operation (enables XCK pin output in synchronous mode).
6. Enable the transmitter or the receiver, depending on the usage.

For interrupt-driven USART operation, global interrupts should be disabled during the initialization.

Before doing a re-initialization with a changed baud rate or frame format, be sure that there are no ongoing transmissions while the registers are changed.

24.3.2 Operation

24.3.2.1 Clock Generation

The clock used for baud rate generation and for shifting and sampling data bits is generated internally by the fractional baud rate generator or externally from the transfer clock (XCK) pin. Five modes of clock generation are supported: normal and double-speed asynchronous mode, master and slave synchronous mode, and master SPI mode.

Figure 24-2. Clock Generation Logic Block Diagram

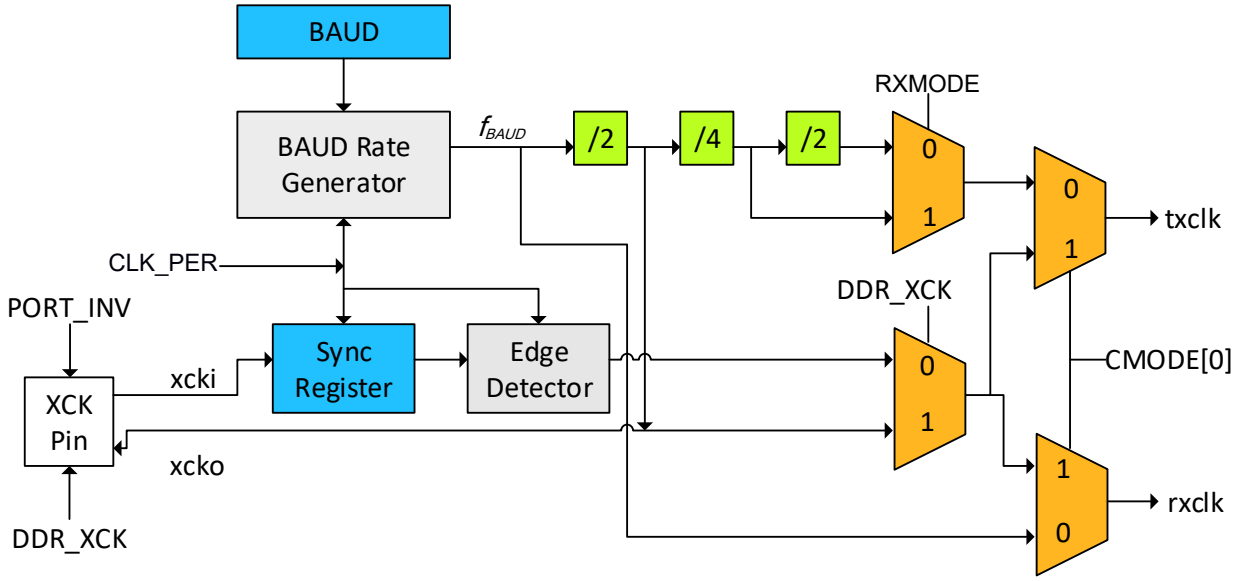

24.3.2.1.1 Internal Clock Generation - The Fractional Baud Rate Generator

The baud rate generator is used for internal clock generation for asynchronous modes, synchronous master mode, and master SPI mode operation. The output frequency generated (f_{BAUD}) is determined by the Baud register value (BAUD in USART.BAUD) and the peripheral clock frequency (f_{CLK_PER}). The following table contains equations for calculating the baud rate (in bits per second) and for calculating the BAUD value for each mode of operation. It also shows the maximum baud rate versus peripheral clock frequency. For asynchronous operation, the BAUD register value is 16 bits. The 10 MSBs (BAUD[15:6]) hold the integer part, while the 6 LSBs (BAUD[5:0]) hold the fractional part. In synchronous mode, only the integer part of the BAUD register determine the baud rate.

Table 24-2. Equations for Calculating Baud Rate Register Setting

Operating Mode	Conditions	Baud Rate (Bits Per Seconds)	USART.BAUD Register Value Calculation
Asynchronous	$f_{BAUD} \leq \frac{f_{CLK_PER}}{S}$	$f_{BAUD} = \frac{64 \times f_{CLK_PER}}{S \times BAUD}$	$BAUD = \frac{64 \times f_{CLK_PER}}{S \times f_{BAUD}}$
Synchronous	$f_{BAUD} \leq \frac{f_{CLK_PER}}{2}$	$f_{BAUD} = \frac{f_{CLK_PER}}{2 \times BAUD[15:6]}$	$BAUD[15:6] = \frac{f_{CLK_PER}}{2 \times f_{BAUD}}$

S is the number of samples per bit. In Asynchronous operating mode (CMODE[0]=0), it could be set as 16 (NORMAL mode) or 8 (CLK2X mode) by RXMODE in USART.CTRLB. For Synchronous operating mode (CMODE[0]=1), *S* equals 2.

24.3.2.1.2 External Clock

External clock (XCK) is used in synchronous slave mode operation. The XCK clock input is sampled on the peripheral clock frequency, and the maximum XCK clock frequency (f_{XCK}) is limited by the following:

$$f_{XCK} < \frac{f_{CLK_PER}}{4}$$

For each high and low period, XCK clock cycles must be sampled twice by the peripheral clock. If the XCK clock has jitter, or if the high/low period duty cycle is not 50/50, the maximum XCK clock speed must be reduced accordingly.

24.3.2.1.3 Double Speed Operation

Double speed operation allows for higher baud rates under asynchronous operation with lower peripheral clock frequencies. This operation mode is enabled by writing the RXMODE bit in the Control B register (USART.CTRLB) to CLK2X.

When enabled, the baud rate for a given asynchronous baud rate setting shown in Table 24-2 will be doubled. In this mode, the receiver will use half the number of samples (reduced from 16 to 8) for data sampling and clock recovery. This requires a more accurate baud rate setting and peripheral clock. See 24.3.2.4.6 Asynchronous Data Reception for more details.

24.3.2.1.4 Synchronous Clock Operation

When synchronous mode is used, the XCK pin controls whether the transmission clock is input (slave mode) or output (master mode). The corresponding port pin must be set to output for master mode or to input for slave mode (PORT.DIR[n]). The normal port operation of the XCK pin will be overridden. The dependency between the clock edges and data sampling or data change is the same. Data input (on RxD) is sampled at the XCK clock edge which is opposite the edge where data output (TxD) is changed.

Figure 24-3. Synchronous Mode XCK Timing

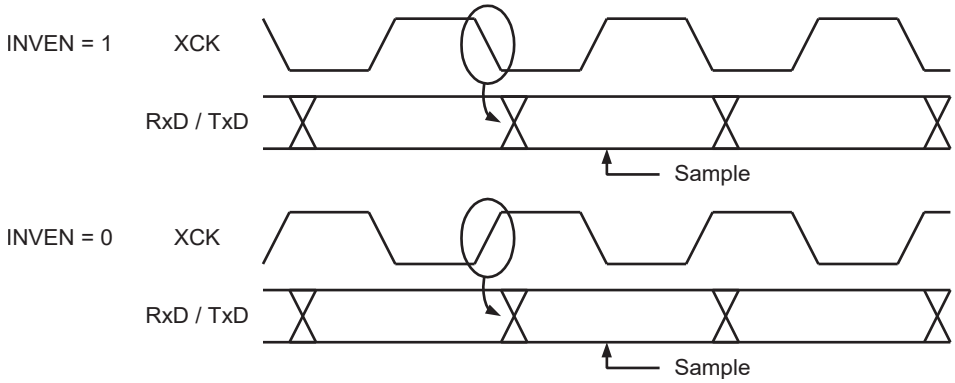

The I/O pin can be inverted by writing a '1' to the Inverted I/O Enable bit (INVEN) in the Pin n Control register of the Port peripheral (PORT.PINnCTRL). Using the inverted I/O setting for the corresponding XCK port pin, the XCK clock edges used for data sampling and data change can be selected. If inverted I/O is disabled (INVEN=0), data will be changed at the rising XCK clock edge and sampled at the falling XCK clock edge. If inverted I/O is enabled (INVEN=1), data will be changed at the falling XCK clock edge and sampled at the rising XCK clock edge.

24.3.2.1.5 Master SPI Mode Clock Generation

For master SPI mode operation, only internal clock generation is supported. This is identical to the USART synchronous master mode, and the baud rate or BAUD setting is calculated using the same equations (see Table 24-2).

There are four combinations of the SPI clock (SCK) phase and polarity with respect to the serial data, and these are determined by the Clock Phase bit (UCPHA) in the Control C register (USART.CTRLC) and the Inverted I/O Enable bit (INVEN) in the Pin n Control register of the Port peripheral (PORT.PINnCTRL). The data transfer timing diagrams are shown in Figure 24-4.

Data bits are shifted out and latched in on opposite edges of the XCK signal, ensuring sufficient time for data signals to stabilize. The settings are summarized in the following Table. Changing the setting of any of these bits during transmission will corrupt both the receiver and transmitter.

Table 24-3. Functionality of INVEN in PORT.PINnCTRL and UCPHA in USART.CTRLC

SPI mode	INVEN	UCPHA	Leading edge	Trailing edge
0	0	0	Rising, sample	Falling, setup
1	0	1	Rising, setup	Falling, sample
2	1	0	Falling, sample	Rising, setup

.....continued				
SPI mode	INVEN	UCPHA	Leading edge	Trailing edge
3	1	1	Falling, setup	Rising, sample

The leading edge is the first clock edge of a clock cycle. The trailing edge is the last clock edge of a clock cycle.

Figure 24-4. UCPHA and INVEN Data Transfer Timing Diagrams

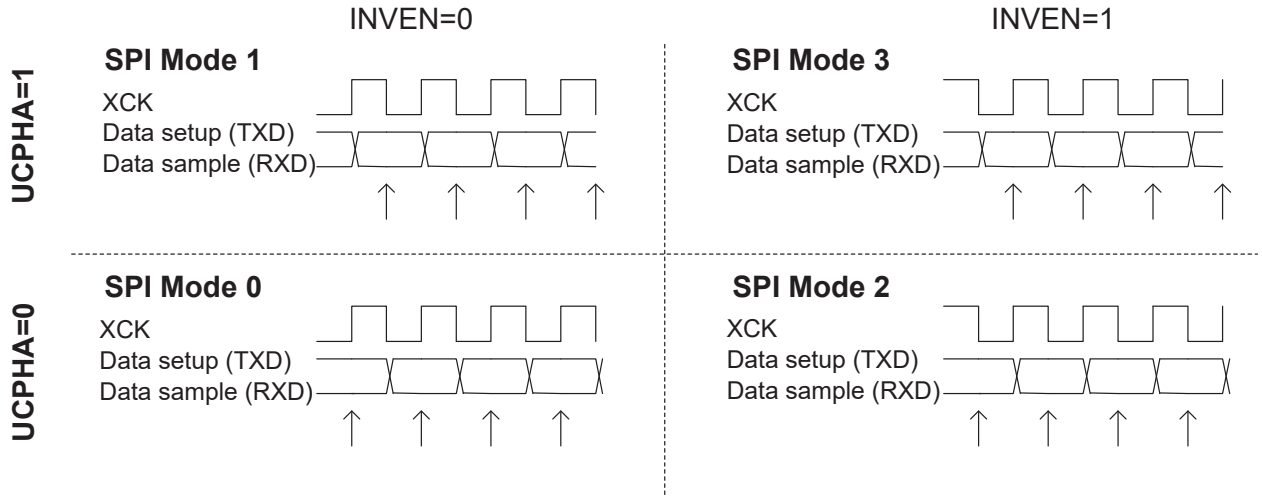

Related Links

24.5.9 CTRLC

24.3.2.2 Frame Formats

Data transfer is frame based, where a serial frame consists of one character of data bits with synchronization bits (start and stop bits) and an optional parity bit for error checking. This does not apply to master SPI operation (See 24.3.2.2.2 SPI Frame Formats). The USART accepts all combinations of the following as valid frame formats:

- 1 start bit
- 5, 6, 7, 8 or 9 data bits
- no, even, or odd parity bit
- 1 or 2 stop bits

Figure 24-5 illustrates the possible combinations of frame formats. Bits inside brackets are optional.

Figure 24-5. Frame Formats

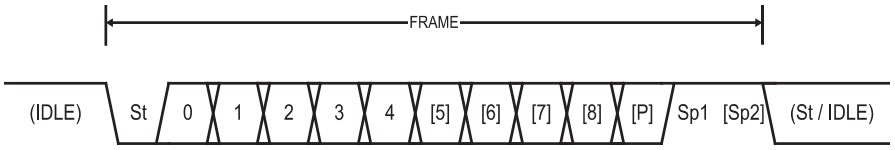

St Start bit, always low.

(n) Data bits (0 to 8).

P Parity bit, may be odd or even.

Sp Stop bit, always high.

IDLE No transfer on the communication line (RxD or TxD). The IDLE state is always high.

24.3.2.2.1 Parity

Even or odd parity can be selected for error checking by writing the Parity Mode bits (PMODE) in the Control C register (USART.CTRLC). If even parity is selected, the parity bit is set to '1' if the number of logical one data bits is odd (making the total number of logical ones even). If odd parity is selected, the parity bit is set to '1' if the number of logical one data bits is even (making the total number of ones odd).

When enabled, the parity checker calculates the parity of the data bits in incoming frames and compares the result with the parity bit of the corresponding frame. If a parity error is detected, the parity error flag is set.

24.3.2.2.2 SPI Frame Formats

The serial frame in SPI mode is defined to be one character of eight data bits. The USART in master SPI mode has two valid frame formats:

- 8-bit data, msb first
- 8-bit data, lsb first

The data order is selected by writing to the Data Order bit (UDORD) in the Control C register (USART.CTRLC).

After a complete frame is transmitted, a new frame can directly follow it, or the communication line can return to the idle (high) state.

24.3.2.3 Data Transmission - USART Transmitter

When the transmitter has been enabled, the normal Port operation of the TxD pin is overridden by the USART and given the function as the transmitter's serial output. The direction of the pin n must be configured as output by writing the Direction register for the corresponding port (PORT_DIR.DIR[n]). If the USART is configured for one-wire operation, the USART will automatically override the RxD/TxD pin to output, when the transmitter is enabled.

Related Links

15. PORTMUX - Port Multiplexer
16. PORT - I/O Pin Configuration

24.3.2.3.1 Sending Frames

A data transmission is initiated by loading the Transmit buffer (DATA in USART.TXDATA) with the data to be sent. The data in the transmit buffer are moved to the Shift Register when the Shift Register is empty and ready to send a new frame. The Shift Register is loaded if it is in idle state (no ongoing transmission) or immediately after the last stop bit of the previous frame is transmitted. When the Shift Register is loaded with data, it will transfer one complete frame.

When the entire frame in the Shift Register has been shifted out and there are no new data present in the transmit buffer, the Transmit Complete Interrupt Flag (TXCIF in USART.STATUS) is set and the optional interrupt is generated.

TXDATA can only be written when the Data Register Empty Flag (DREIF in USART.STATUS) is set, indicating that the register is empty and ready for new data.

When using frames with fewer than eight bits, the most-significant bits written to TXDATA are ignored. If 9-bit characters are used, DATA[8] in USART.TXDATAH has to be written before DATA[7:0] in USART.TXDATAL.

24.3.2.3.2 Disabling the Transmitter

A disabling of the transmitter will not become effective until ongoing and pending transmissions are completed; I.e., when the Transmit Shift register and Transmit Buffer register do not contain data to be transmitted. When the transmitter is disabled, it will no longer override the TxDn pin, and the PORT module regains control over the pin. To protect external circuitry the pin is automatically configured as an input by hardware. The pin can now be used as a normal I/O pin with no port override from the USART.

24.3.2.4 Data Reception - USART Receiver

When the receiver is enabled, the RxD pin functions as the receiver's serial input. The direction of the pin n must be set as input in the Direction register of the Port (PORT_DIR.DIR[n]=0), which is the default pin setting.

24.3.2.4.1 Receiving Frames

The receiver starts data reception when it detects a valid start bit. Each bit that follows the start bit will be sampled at the baud rate or XCK clock, and shifted into the Receive Shift Register until the first stop bit of a frame is received. A second stop bit will be ignored by the receiver. When the first stop bit is received and a complete serial frame is present in the Receive Shift Register, the contents of the Shift Register will be moved into the receive buffer. The receive complete interrupt flag (RXCIF in USART.STATUS) is set, and the optional interrupt is generated.

The receiver buffer can be read by reading RXDATA, comprising of DATA[7:0] in USART.RXDATAL, and DATA[8] in USART.RXDATAH. RXDATA should not be read unless the Receive Complete Interrupt Flag (RXCIF in USART.STATUS) is set. When using frames with fewer than eight bits, the unused most-significant bits are read as zero. If 9-bit characters are used, the ninth bit (DATA[8] in USART.RXDATAH) must be read before the low byte (DATA[7.0] in USART.RXDATAL).

24.3.2.4.2 Receiver Error Flags

The USART receiver has three error flags in the Receiver Data Register High Byte register (USART.RXDATAH):

- Frame Error (FERR)
- Buffer overflow (BUFOVF)
- Parity error (PERR)

The error flags are located in the receive FIFO buffer together with their corresponding frame. Due to the buffering of the error flags, the USART.RXDATAH must be read before the USART.RXDATAL, since reading the USART.RXDATAL changes the FIFO buffer.

24.3.2.4.3 Parity Checker

When enabled, the parity checker calculates the parity of the data bits in incoming frames and compares the result with the parity bit of the corresponding frame. If a parity error is detected, the Parity Error flag (PERR in USART.RXDATAH) is set.

If USART LIN mode is enabled (by writing RXMODE to '1' in USART.CTRLB), a parity check is only performed on the protected identifier field. An parity error is detected if one of the equations below is not true which sets PERR in USART.RXDATAH.

$$P0 = ID0 \oplus ID1 \oplus ID2 \oplus ID4$$
$$P1 = \neg\left(ID1 \oplus ID3 \oplus ID4 \oplus ID5\right)$$

Figure 24-6. Protected identifier field and mapping of identifier and parity bits

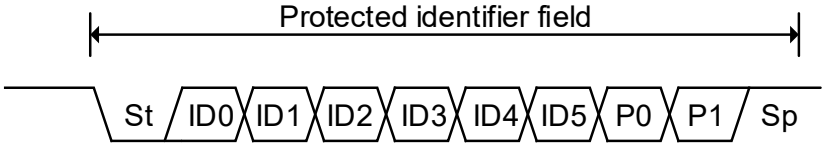

24.3.2.4.4 Disabling the Receiver

A disabling of the receiver will be immediate. The receiver buffer will be flushed, and data from ongoing receptions will be lost.

24.3.2.4.5 Flushing the Receive Buffer

If the receive buffer has to be flushed during normal operation, read the DATA location (USART.RXDATAH and USART.RXDATAL registers) until the Receive Complete Interrupt Flag (RXCIF in USART.RXDATAH) is cleared.

24.3.2.4.6 Asynchronous Data Reception

The USART includes a clock recovery and a data recovery unit for handling asynchronous data reception.

The clock recovery unit is used for synchronizing the incoming asynchronous serial frames at the RxD pin to the internally generated baud rate clock. It samples and low-pass filters each incoming bit, thereby improving the noise immunity of the receiver. The asynchronous reception operational range depends on the accuracy of the internal baud rate clock, the rate of the incoming frames, and the frame size in number of bits.

Asynchronous Clock Recovery

The clock recovery unit synchronizes the internal clock to the incoming serial frames. Figure 24-7 illustrates the sampling process for the start bit of an incoming frame. The sample rate is 16 times the baud rate for normal mode, and eight times the baud rate for double speed mode. The horizontal arrows illustrate the synchronization variation due to the sampling process. The larger time variation when using the double speed mode of operation. Samples denoted as zero are samples done when the RxD line is idle; i.e., when there is no communication activity.

Figure 24-7. Start Bit Sampling

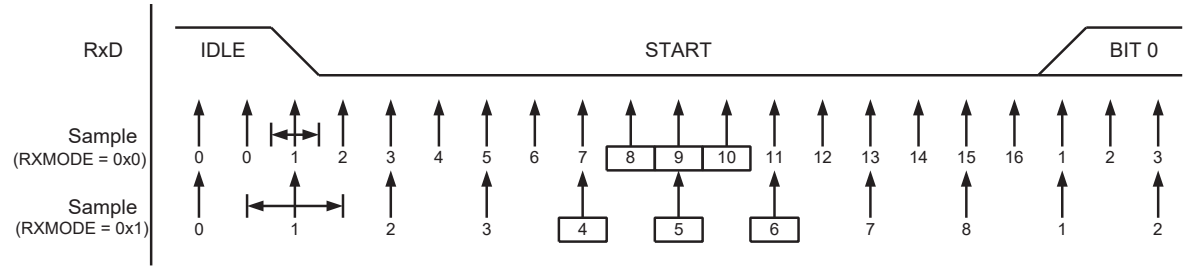

When the clock recovery logic detects a high (idle) to low (start) transition on the RxD line, the start bit detection sequence is initiated. Sample 1 denotes the first zero-sample, as shown in the figure. The clock recovery logic then uses samples 8, 9, and 10 for normal mode and samples 4, 5, and 6 for double speed mode to decide if a valid start bit is received. If two or three samples have a low level, the start bit is accepted. The clock recovery unit is synchronized, and the data recovery can begin. If two or three samples have a high level, the start bit is rejected as a noise spike, and the receiver looks for the next high-to-low transition. The process is repeated for each start bit.

Asynchronous Data Recovery

The data recovery unit uses sixteen samples in normal mode and eight samples in double speed mode for each bit. The following Figure shows the sampling process of data and parity bits.

Figure 24-8. Sampling of Data and Parity Bits

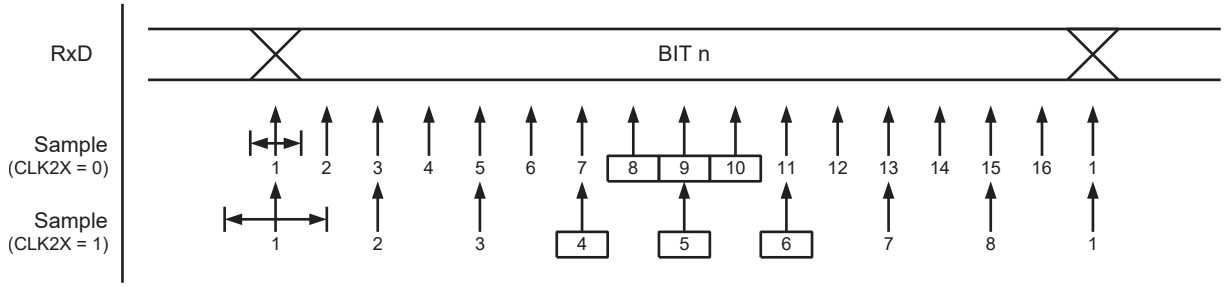

As for start bit detection, an identical majority voting technique is used on the three center samples for deciding of the logic level of the received bit. The process is repeated for each bit until a complete frame is received. It includes the first stop bit, but excludes additional ones. If the sampled stop bit is a '0' value, the Frame Error (FERR in USART.RXDATAH) flag will be set. The next Figure shows the sampling of the stop bit in relation to the earliest possible beginning of the next frame's start bit.

Figure 24-9. Stop Bit and Next Start Bit Sampling

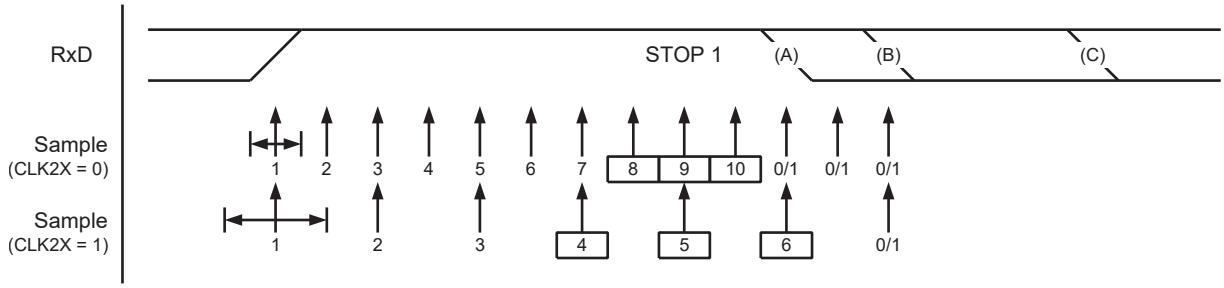

A new high-to-low transition indicating the start bit of a new frame can come right after the last of the bits used for majority voting. For normal speed mode, the first low level sample can be at the point marked (A) in Stop Bit Sampling and Next Start Bit Sampling. For double speed mode, the first low level must be delayed to point (B). Point (C) marks a stop bit of full length at nominal baud rate. The early start bit detection influences the operational range of the receiver.

24.3.2.4.7 Asynchronous Operational Range

The operational range of the receiver is dependent on the mismatch between the received bit rate and the internally generated baud rate. If an external transmitter is sending using bit rates that are too fast or too slow, or if the

internally generated baud rate of the receiver does not match the external source's base frequency, the receiver will not be able to synchronize the frames to the start bit.

The following equations can be used to calculate the ratio of the incoming data rate and internal receiver baud rate.

$R_{SLOW} = \frac{16(D+1)}{16(D+1)+6}$	$R_{FAST} = \frac{16(D+2)}{16(D+1)+8}$

D Sum of character size and parity size (D = 5 to 10 bit).

R_{slow} Is the ratio of the slowest incoming data rate that can be accepted in relation to the receiver baud rate.

R_{fast} Is the ratio of the fastest incoming data rate that can be accepted in relation to the receiver baud rate.

The following tables list the maximum receiver baud rate error that can be tolerated. Normal Speed mode has higher toleration of baud rate variations.

Table 24-4. Recommended Maximum Receiver Baud Rate Error for Normal Speed Mode (CLK2X = 0)

D #(Data + Parity bit)	R_{slow} [%]	R_{fast} [%]	Maximum total error [%]	Receiver max. receiver error [%]
5	93.20	106.67	+6.67/-6.80	±3.0
6	94.12	105.79	+5.79/-5.88	±2.5
7	94.81	105.11	+5.11/-5.19	±2.0
8	95.36	104.58	+4.58/-4.54	±2.0
9	95.81	104.14	+4.14/-4.19	±1.5
10	96.17	103.78	+3.78/-3.83	±1.5

Table 24-5. Recommended Maximum Receiver Baud Rate Error for Double Speed Mode (CLK2X = 1)

D #(Data + Parity bit)	R_{slow} [%]	R_{fast} [%]	Maximum total error [%]	Receiver max. receiver error [%]
5	94.12	105.66	+5.66/-5.88	±2.5
6	94.92	104.92	+4.92/-5.08	±2.0
7	95.52	104.35	+4.35/-4.48	±1.5
8	96.00	103.90	+3.90/-4.00	±1.5
9	96.39	103.53	+3.53/-3.61	±1.5
10	96.70	103.23	+3.23/-3.30	±1.0

The recommendations of the maximum receiver baud rate error were made under the assumption that the receiver and transmitter equally divide the maximum total error.

24.3.2.5 USART in Master SPI mode

Using the USART in master SPI mode requires the transmitter to be enabled. The receiver can optionally be enabled to serve as the serial input. The XCK pin will be used as the transfer clock.

As for the USART, a data transfer is initiated by writing to the DATA Register. This is the case for both sending and receiving data, since the transmitter controls the transfer clock. The data written to DATA are moved from the transmit buffer to the Shift Register when the Shift Register is ready to send a new frame.

The transmitter and receiver interrupt flags and corresponding USART interrupts used in master SPI mode are identical in function to their use in normal USART operation. The receiver error status flags are not in use and are always read as zero.

Disabling of the USART transmitter or receiver in master SPI mode is identical to their disabling in normal USART operation.

Related Links

24.5.9 CTRLC

24.3.2.5.1 USART SPI vs. SPI

The USART in master SPI mode is fully compatible with the standalone SPI module in that:

- Timing diagrams are the same
- UCPHA bit functionality is identical to that of the SPI CPHA bit
- UDORD bit functionality is identical to that of the SPI DORD bit

When the USART is set in master SPI mode, configuration and use are in some cases different from those of the standalone SPI module. In addition, the following difference exists:

- The USART in master SPI mode does not include the SPI (Write Collision) feature

The USART in master SPI mode does not include the SPI double speed mode feature, but this can be achieved by configuring the baud rate generator accordingly:

- Interrupt timing is not compatible
- Pin control differs due to the master-only operation of the USART in SPI master mode

A comparison of the USART in master SPI mode and the SPI pins is shown in Table 24-6.

Table 24-6. Comparison of USART in master SPI mode and SPI pins.

USART	SPI	Comment
TxD	MOSI	Master out only
RxD	MISO	Master in only
XCK	SCK	Functionally identical
-	SS	Not supported by USART in master SPI mode

Related Links

24.5.9 CTRLC

24.3.2.6 RS485 Mode of Operation

The RS485 feature enables the support of external components to comply with the RS-485 standard.

Either an external line driver is supported as shown in the figure below (RS485=0x1 in USART.CTRLA), or control of the transmitter driving the TxD pin is provided (RS485=0x2).

While operating in RS485 mode, the Transmit Enable pin (TE) is driven high when the transmitter is active.

Figure 24-10. RS485 Bus Connection

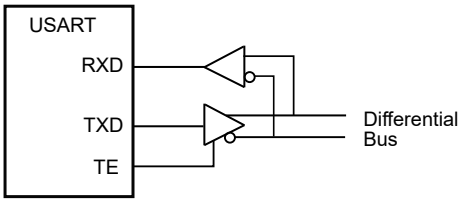

The TE pin goes high one baud clock cycle in advance of data being shifted out, to allow some guard time to enable the external line driver. The TE pin will remain high for the complete frame including stop bit(s).

Figure 24-11. TE Drive Timing



Related Links

24.2.1 Signal Description

24.3.2.7 Start Frame Detection

The start frame detection is supported in UART mode only. The UART start frame detector is limited to Standby sleep mode only and can wake up the system when a start bit is detected.

When a high-to-low transition is detected on RxDn, the oscillator is powered up and the UART clock is enabled. After start-up, the rest of the data frame can be received, provided that the baud rate is slow enough in relation to the oscillator start-up time. Start-up time of the oscillators varies with supply voltage and temperature. For details on oscillator start-up time characteristics, refer to the Electrical Characteristics.

If a false start bit is detected and if the system has not been waken-up by another source, the clock will automatically be turned off and the UART waits for the next transition.

The UART start frame detection works in asynchronous mode only. It is enabled by writing the Start Frame Detection bit (SFDEN) in 24.5.7 CTRLB. If the start bit is detected while the device is in Standby sleep mode, the UART Start Interrupt Flag (RXSIF) bit is set.

In Active, Idle and Power Down sleep modes, the asynchronous detection is automatically disabled.

The UART receive complete flag and UART start interrupt flag share the same interrupt line, but each has its dedicated interrupt settings. The Table 21-5 shows the USART start frame detection modes, depending of interrupt setting.

Table 24-7. USART Start Frame Detection Modes

SFDEN	RXSIF interrupt	RXCIF interrupt	Comment
0	x	x	Standard mode
1	Disabled	Disabled	Only the oscillator is powered during the frame reception. If the interrupts are disabled and buffer overflow is ignored, all incoming frames will be lost
1 (1)	Disabled	Enabled	System/all clocks waked-up on Receive Complete interrupt
1 (1)	Enabled	x	System/all clocks waked-up on UART Start Detection

Note:

1. The SLEEP instruction will not shut down the oscillator if there is ongoing communication.

Related Links

34. Electrical Characteristics

24.3.2.8 Break Character Detection and Auto-baud

When USART receive mode is set to LINAUTO mode (RXMODE in USART.CTRLB), it follows the LIN format. All LIN Frames start with a Break Field followed by a Sync Field. The USART uses a break detection threshold of greater than 11 nominal bit times at the configured baud rate. At any time, if more than 11 consecutive dominant bits are detected on the bus, the USART detects a Break Field. When a Break Field has been detected, the USART expects the Sync Field character to be 0x55. This field is used to update the actual baud rate in order to stay synchronized. If the received Sync character is not 0x55, then the Inconsistent Sync Field error flag (ISFIF in USART.STATUS) is set and the baud rate is unchanged.

Figure 24-12. LIN Break and Sync Fields

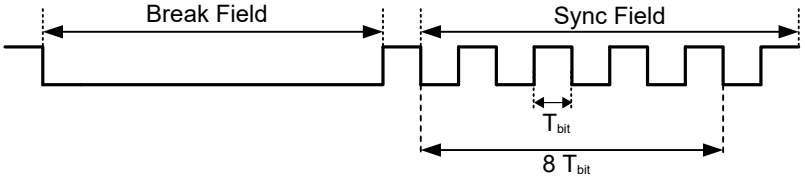

After a break field is detected and the start bit of the Sync Field is detected, a counter is started. The counter is then incremented for the next 8 T_{bit} of the Sync Field. At the end of these 8 bit times, the counter is stopped. At this moment, the 10 most significant bits of the counter (value divided by 64) gives the new clock divider and the 6 least significant bits of this value (the remainder) gives the new fractional part. When the Sync Field has been received and all bits found valid, the clock divider and the fractional part are updated in the Baud Rate Generator register (USART.BAUD). After the Break and Sync Fields, n characters of data can be received.

When the USART receive mode is set to GENAUTO mode, a generic auto-baud mode is enabled. In this mode there no check of Sync character to equal 0x55. After detection of a Break Field the USART expects the next character to be a Sync field, counting 8 low and high bit times. If the measured Sync field result in a valid BAUD value (0x0064-0xffff), the BAUD register is updated. Setting the Wait for Break bit (WFB in USART.STATUS) before receiving the next Break character, the next negative plus positive edge of RxD line is detected as a Break. This makes it possible to set an arbitrary new Baud Rate without knowing the current Baud Rate.

24.3.2.9 One-Wire Mode

In this mode, the TxD output is fed directly into the Receiver Data Register. If the receiver is enabled when transmitting, it will receive what the transmitter is sending. This can be used to check that no one else is trying to transmit since received data will not be the same as the transmitted data.

24.3.2.10 Multiprocessor Communication Mode

The multiprocessor communication mode (MCPM) effectively reduces the number of incoming frames that have to be handled by the receiver in a system with multiple microcontrollers communicating via the same serial bus. This mode is enabled by writing a '1' to the MCPM bit in the Control B register (USART.CTRLB). In this mode, a dedicated bit in the frames is used to indicate whether the frame is an address or data frame type.

If the receiver is set up to receive frames that contain five to eight data bits, the first stop bit is used to indicate the frame type. If the receiver is set up for frames with nine data bits, the ninth bit is used to indicate frame type. When the frame type bit is one, the frame contains an address. When the frame type bit is zero, the frame is a data frame. If 5-bit to 8-bit character frames are used, the transmitter must be set to use two stop bits, since the first stop bit is used for indicating the frame type.

If a particular slave MCU has been addressed, it will receive the following data frames as usual, while the other slave MCUs will ignore the frames until another address frame is received.

24.3.2.10.1 Using Multiprocessor Communication Mode

The following procedure should be used to exchange data in multiprocessor communication mode (MPCM):

1. All slave MCUs are in multiprocessor communication mode.
2. The master MCU sends an address frame, and all slaves receive and read this frame.
3. Each slave MCU determines if it has been selected.
4. The addressed MCU will disable MPCM and receive all data frames. The other slave MCUs will ignore the data frames.
5. When the addressed MCU has received the last data frame, it must enable MPCM again and wait for a new address frame from the master.

The process then repeats from step 2.

Using any of the 5- to 8-bit character frame formats is impractical, as the receiver must change between using n and n+1 character frame formats. This makes full-duplex operation difficult, since the transmitter and receiver must use the same character size setting.

24.3.2.11 IRCOM Mode of Operation

The IRCOM mode enables IrDA 1.4 compliant modulation and demodulation for baud rates up to 115.2kbps. When IRCOM mode is enabled, double speed mode cannot be used for the USART.

24.3.2.11.1 Overview

The device contains one infrared communication module (IRCOM) that is IrDA compatible for baud rates up to 115.2kbps.

The IRCOM is automatically enabled when the USART is set in IRCOM mode (by writing 0x2 to CTRLC.CMODE). The signals between the USART and the RX/TX pins are then routed through the module. The data on the TX/RX pins are the inverted value of the transmitted/received infrared pulse. It is also possible to select an event channel from the event system as input for the IRCOM receiver. This will disable the RX input from the USART pin.

For transmission, three pulse modulation schemes are available:

- 3/16 of the baud rate period
- Fixed programmable pulse time based on the peripheral clock frequency
- Pulse modulation disabled

For reception, a fixed programmable minimum high-level pulse width for the pulse to be decoded as a logical '0' is used. Shorter pulses will then be discarded, and the bit will be decoded to logical '1' as if no pulse was received.

24.3.2.11.2 Block Diagram

Figure 24-13. Block Diagram

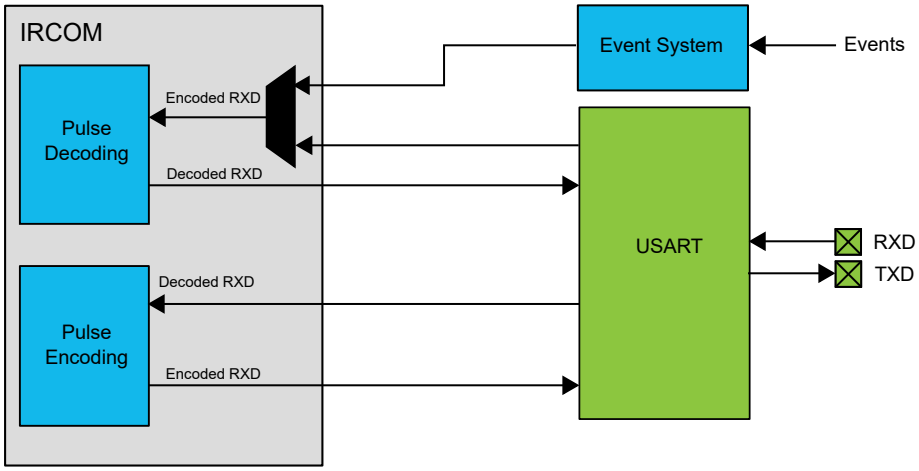

24.3.2.11.3 IRCOM and Event System

The event system can be used as the receiver input. This enables the IRCOM or USART input from the I/O pins or sources other than the corresponding RX pin. If event system input is enabled, input from the USART's RX pin is automatically disabled.

Related Links

14. EVSYS - Event System

24.3.3 Events

The USART can accept the following input Events:

- IREI - IrDA Event Input

The Event is enabled by writing a '1' to the IrDA Event Input bit (IREI) in the Event Control register (USART.EVCTRL).

Related Links

14. EVSYS - Event System
24.5.12 EVCTRL

24.3.4 Interrupts

Table 24-8. Available Interrupt Vectors and Sources

Offset	Name	Vector Description	Conditions
0x00	RXC	Receive Complete interrupt	• There are unread data in the receive buffer (RXCIE) • Receive of Start-of-Frame detected (RXSIE) • Auto-Baud Error/ISFIF flag set (ABEIE)
0x02	DRE	Data Register Empty interrupt	The transmit buffer is empty/ready to receive new data (DREIE).
0x04	TXC	Transmit Complete interrupt	The entire frame in the Transmit Shift Register has been shifted out and there are no new data in the transmit buffer (TXCIE).

When an interrupt condition occurs, the corresponding Interrupt Flag is set in the Status register (USART.STATUS).

An interrupt source is enabled or disabled by writing to the corresponding bit in the Control A register (USART.CTRLA).

An interrupt request is generated when the corresponding interrupt source is enabled and the Interrupt Flag is set. The interrupt request remains active until the Interrupt Flag is cleared. See the USART.STATUS register for details on how to clear Interrupt Flags.

Related Links

13. CPUINT - CPU Interrupt Controller
24.5.5 STATUS
24.5.6 CTRLA

24.3.5 Configuration Change Protection

Not applicable.

24.4 Register Summary - USART

Offset	Name	Bit Pos.								
0x00	RXDATAL	7:0	DATA[7:0]							
0x01	RXDATAH	7:0	RXCIF	BUFOVF				FERR	PERR	DATA[8]
0x02	TXDATAL	7:0	DATA[7:0]							
0x03	TXDATAH	7:0								DATA[8]
0x04	STATUS	7:0	RXCIF	TXCIF	DREIF	RXSIF	ISFIF		BDF	WFB
0x05	CTRLA	7:0	RXCIE	TXCIE	DREIE	RXSIE	LBME	ABEIE	RS485[1:0]	
0x06	CTRLB	7:0	RXEN	TXEN		SFDEN	ODME	RXMODE[1:0]		MPCM
0x07	CTRLC	7:0	CMODE[1:0]		PMODE[1:0]		SBMODE	CHSIZE[2:0]		
0x07	CTRLC	7:0	CMODE[1:0]					UDORD	UCPHA	
0x08	BAUD	7:0	BAUD[7:0]							
		15:8	BAUD[15:8]							
0x0A	Reserved									
0x0B	DBGCTRL	7:0								DBGRUN
0x0C	EVCTRL	7:0								IREI
0x0D	TXPLCTRL	7:0	TXPL[7:0]							
0x0E	RXPLCTRL	7:0		RXPL[6:0]						

24.5 Register Description

24.5.1 Receiver Data Register Low Byte

Name: RXDATAL
Offset: 0x00
Reset: 0x00
Property: R

Reading the RXDATAL Register location will return the contents of the Receive Data Buffer Register (RXB). The receive buffer consists of a two level FIFO. The FIFO and the corresponding flags in the high byte of RXDATA will change state whenever the receive buffer is accessed (read). If CHSIZE in USART.CTRLC is set to 9BIT Low byte first, read USART.RXDATAL before USART.RXDATAH, otherwise always read USART.RXDATAH before USART.RXDATAL in order to get the correct flags.

Bit	7	6	5	4	3	2	1	0
	DATA[7:0]							
Access	R	R	R	R	R	R	R	R
Reset	0	0	0	0	0	0	0	0

Bits 7:0 – DATA[7:0] Receiver Data Register

24.5.2 Receiver Data Register High Byte

Name: RXDATAH
Offset: 0x01
Reset: 0x00
Property: -

Reading the RXDATAH Register location will return the contents of the ninth DATA bit plus status bits.

The receive buffer consists of a two level FIFO. The FIFO and the corresponding flags in the high byte of USART.RXDATAH will change state whenever the receive buffer is accessed (read). If CHSIZE in USART.CTRLC is set to 9BIT Low byte first, read USART.RXDATAL before USART.RXDATAH, otherwise always read USART.RXDATAH before USART.RXDATAL in order to get the correct flags.

Bit	7	6	5	4	3	2	1	0
	RXCIF	BUFOVF				FERR	PERR	DATA[8]
Access	R	R				R	R	R
Reset	0	0				0	0	0

Bit 7 – RXCIF USART Receive Complete Interrupt Flag
This flag is set when there are unread data in the receive buffer and cleared when the receive buffer is empty (i.e., does not contain any unread data). When the Receiver is disabled, the receive buffer will be flushed and consequently the RXCIF will become zero.

Bit 6 – BUFOVF Buffer Overflow
The BUFOVF flag indicates data loss due to a receiver buffer full condition. This flag is set if a Buffer Overflow condition is detected. A Buffer Overflow occurs when the receive buffer is full (two characters), it is a new character waiting in the Receive Shift Register, and a new start bit is detected. This flag is valid until the receive buffer (USART.RXDATAL) is read.
This flag is not used in Master SPI mode of operation.

Bit 2 – FERR Frame Error
The FERR flag indicates the state of the first stop bit of the next readable frame stored in the receive buffer. The bit is set if the received character had a Frame Error, i.e. when the first stop bit was zero, and cleared when the stop bit of the received data is '1'. This bit is valid until the receive buffer (USART.RXDATAL) is read. The FERR is not affected by the SBMODE bit in USART.CTRLC since the Receiver ignores all, except for the first stop bit.
This flag is not used in Master SPI mode of operation.

Bit 1 – PERR Parity Error
If parity checking is enabled and the next character in the receive buffer has a Parity Error this flag is set. If Parity Check is not enabled the PERR will always be read as zero. This bit is valid until the receive buffer (USART.RXDATAL) is read. For details on parity calculation refer to 24.3.2.2.1 Parity . If USART is set to LINAUTO mode, this bit will be a Parity Check of the Protected identifier field and will be valid when DATA[8] in USART.RXDATAH reads low.
This flag is not used in Master SPI mode of operation.

Bit 0 – DATA[8] Receiver Data Register
When USART receiver is set to LINAUTO mode, this bit indicates if the received data is within the response space of a LIN frame. If the received data is the Protected identifier field, this bit will be read as zero. Otherwise the bit will be read as one. For receiver mode other than LINAUTO mode, DATA[8] holds the ninth data bit in the received character when operating with serial frames with nine data bits.

24.5.3 Transmit Data Register Low Byte

Name: TXDATAL
Offset: 0x02
Reset: 0x00
Property: R/W

The Transmit Data Buffer Register (TXB) will be the destination for data written to the USART.TXDATAL Register location.

For 5-, 6-, or 7-bit characters the upper unused bits will be ignored by the Transmitter and set to zero by the Receiver.

The transmit buffer can only be written when the DREIF Flag in the USART.STATUS Register is set. Data written to DATA when the DREIF Flag is not set, will be ignored by the USART Transmitter. When data is written to the transmit buffer, and the Transmitter is enabled, the Transmitter will load the data into the Transmit Shift Register when the Shift Register is empty. The data is then transmitted on the TxD pin.

Bit	7	6	5	4	3	2	1	0
	DATA[7:0]							
Access	R/W	R/W	R/W	R/W	R/W	R/W	R/W	R/W
Reset	0	0	0	0	0	0	0	0

Bits 7:0 – DATA[7:0] Transmit Data Register

24.5.4 Transmit Data Register High Byte

Name: TXDATAH
Offset: 0x03
Reset: 0x00
Property: -

USART.TXDATAH holds the ninth data bit in the character to be transmitted when operating with serial frames with nine data bits. When used this bit must be written before writing to USART.TXDATAL except if CHSIZE in USART.CTRLC is set to 9BIT Low byte first where USART.TXDATAL should be written first.
This bit is unused in Master SPI mode of operation.

Bit	7	6	5	4	3	2	1	0
								DATA[8]
Access								W
Reset								0

Bit 0 – DATA[8] Transmit Data Register
This bit is used when CHSIZE=9BIT in USART.CTRLC.

24.5.5 USART Status Register

Name: STATUS
Offset: 0x04
Reset: 0x00
Property: -

Bit	7	6	5	4	3	2	1	0
	RXCIF	TXCIF	DREIF	RXSIF	ISFIF		BDF	WFB
Access	R	R/W	R	R/W	R/W		R/W	R/W
Reset	0	0	0	0	0		0	0

Bit 7 – RXCIF USART Receive Complete Interrupt Flag
This flag is set to '1' when there are unread data in the receive buffer and cleared when the receive buffer is empty (i.e., does not contain any unread data). When the Receiver is disabled, the receive buffer will be flushed and consequently the RXCIF will become zero.
When interrupt-driven data reception is used, the receive complete interrupt routine must read the received data from RXDATA in order to clear the RXCIF. If not, a new interrupt will occur directly after the return from the current interrupt.

Bit 6 – TXCIF USART Transmit Complete Interrupt Flag
This flag is set when the entire frame in the Transmit Shift Register has been shifted out and there are no new data in the transmit buffer (TXDATA).
This flag is automatically cleared when the transmit complete interrupt vector is executed. The flag can also be cleared by writing a '1' to its bit location.

Bit 5 – DREIF USART Data Register Empty Flag
The DREIF indicates if the transmit buffer (TXDATA) is ready to receive new data. The flag is set to '1' when the transmit buffer is empty, and is '0' when the transmit buffer contains data to be transmitted that has not yet been moved into the Shift Register. DREIF is set after a reset to indicate that the Transmitter is ready. Always write this bit to '0' when writing the STATUS register.
DREIF is cleared to '0' by writing TXDATAL. When interrupt-driven data transmission is used, the Data Register Empty interrupt routine must either write new data to TXDATA in order to clear DREIF or disable the Data Register Empty interrupt. If not, a new interrupt will occur directly after the return from the current interrupt.

Bit 4 – RXSIF USART Receive Start Interrupt Flag
The RXSIF flag indicates a valid start condition on RxD line. The flag is set when the system is in standby modes and a high (IDLE) to low (START) valid transition is detected on the RxD line. If the start detection is not enabled, the RXSIF will always be read as zero. This flag can only be cleared by writing a '1' to its bit location. This flag is not used in master SPI mode operation.

Bit 3 – ISFIF Inconsistent Sync Field Interrupt Flag
This bit is set when the auto-baud is enabled and the sync field bit time are too fast or too slow to give a valid baud setting. It will also be set when USART is set to LINAUTO mode and the SYNC character differ from data value 0x55. Writing a '1' to this bit will clear the flag and bring the USART back to idle state.

Bit 1 – BDF Break Detected Flag
This bit is intended for USART configured to LINAUTO receive mode, see 24.5.7 CTRLB. The break detector has a fixed threshold of 11 bits low for a BREAK to be detected. The BDF bit is set after a valid BREAK and SYNC character is detected. The bit is automatically cleared when next data is received. The bit will behave identically when USART is set to GENAUTO mode. In NORMAL or CLK2X receive mode, the BDF bit is unused.
This bit is cleared by writing a '1' to it.

Bit 0 – WFB Wait For Break
Writing this bit to '1' will register the next low and high transition on RxD line as a break character. This can be used to wait for a BREAK character of arbitrary width. Combined with USART set to GENAUTO mode, this allow the user

to set any BAUD rate trough BREAK and SYNC as long as it falls within valid range of the USART.BAUD register.
This bit will always read '0'.

24.5.6 Control A

Name: CTRLA
Offset: 0x05
Reset: 0x00
Property: -

Bit	7	6	5	4	3	2	1	0
	RXCIE	TXCIE	DREIE	RXSIE	LBME	ABEIE	RS485[1:0]	
Access	R/W	R/W	R/W	R/W	R/W	R/W	R/W	R/W
Reset	0	0	0	0	0	0	0	0

Bit 7 – RXCIE Receive Complete Interrupt Enable
The bit enables the Receive Complete Interrupt (interrupt vector RXC). The enabled interrupt will be triggered when RXCIF in the USART.STATUS register is set.

Bit 6 – TXCIE Transmit Complete Interrupt Enable
This bit enables the Transmit Complete Interrupt (interrupt vector TXC). The enabled interrupt will be triggered when the TXCIF in the USART.STATUS register is set.

Bit 5 – DREIE Data Register Empty Interrupt Enable
This bit enables the Data Register Empty Interrupt (interrupt vector DRE). The enabled interrupt will be triggered when the DREIF in the USART.STATUS register is set.

Bit 4 – RXSIE Receiver Start Frame Interrupt Enable
Writing a '1' to this bit enables the Start Frame Detector to generate an interrupt on interrupt vector RXC when a start of frame condition is detected.

Bit 3 – LBME Loop-back Mode Enable
Writing this bit to '1' enables an internal connection between TxD and RxD pin.

Bit 2 – ABEIE Auto-baud Error Interrupt Enable
Writing this bit to '1' enables the auto-baud error interrupt on interrupt vector RXC. The enabled interrupt will trigger for conditions where ISFIF flag is set.

Bits 1:0 – RS485[1:0] RS485 Mode
These bits enable the RS485 and select the operation mode.

Value	Name	Description
0x0	OFF	Disabled.
0x1	EXT	Enables RS485 mode with control of an external line driver through a dedicated Transmit Enable (TE) pin.
0x2	INT	Enables RS485 mode with control of the internal USART transmitter.
0x3	-	Reserved.

24.5.7 Control B

Name: CTRLB
Offset: 0x06
Reset: 0x00
Property: -

Bit	7	6	5	4	3	2	1	0
	RXEN	TXEN		SFDEN	ODME	RXMODE[1:0]		MPCM
Access	R/W	R/W		R/W	R/W	R/W	R/W	R/W
Reset	0	0		0	0	0	0	0

Bit 7 – RXEN Receiver Enable
Writing this bit to ‘1’ enables the USART receiver. The receiver will override normal port operation for the RxD pin when enabled. Disabling the receiver will flush the receive buffer invalidating the FERR, BUFOVF, and PERR flags. In GENAUTO and LINAUTO mode, disabling the receiver will reset the auto-baud detection logic.

Bit 6 – TXEN Transmitter Enable
Writing this bit to ‘1’ enables the USART transmitter. The transmitter will override normal port operation for the TxD pin when enabled. Disabling the transmitter (writing TXEN to '0') will not become effective until ongoing and pending transmissions are completed (i.e. when the Transmit Shift register and Transmit Buffer register does not contain data to be transmitted). When the transmitter is disabled, it will no longer override the TxDn pin, and the pin direction is set as input automatically by hardware, even if it was configured as output by the user.

Bit 4 – SFDEN Start Frame Detection Enable
Writing this bit to ‘1’ enables the USART Start Frame Detection mode. The Start Frame detector is able to wake up the system from Idle or Standby Sleep modes when a high (IDLE) to low (START) transition is detected on the RxD line.

Bit 3 – ODME Open Drain Mode Enable
Writing this bit to ‘1’ makes the TxD pin to have open-drain functionality. A pull-up resistor is needed to prevent the line from floating when a logic '1' is output to the TxD pin.

Bits 2:1 – RXMODE[1:0] Receiver Mode
In CLK2X mode, the divisor of the baud rate divider will be reduced from 16 to 8 effectively doubling the transfer rate for asynchronous communication modes. For synchronous operation, the CLK2X mode has no effect and RXMODE should always be written to '0'. RXMODE must be '0' when the USART Communication mode is configured to IRCOM. Setting RXMODE to GENAUTO enables generic auto-baud where the SYNC character is valid when eight low and high bits have been registered. In this mode, any SYNC character that gives a valid BAUD rate will be accepted. In LINAUTO mode the SYNC character is constrained and found valid if every two bits falls within 16 ±3 baud samples of the internal baud rate and match data value 0x55. The GENAUTO and LINAUTO mode is only supported for USART operated in Asynchronous Slave mode.

Value	Name	Description
0x0	NORMAL	Normal USART mode, Standard Transmission Speed
0x1	CLK2X	Normal USART mode, Double Transmission Speed
0x2	GENAUTO	Generic Auto-baud mode
0x3	LINAUTO	LIN Constrained Auto-baud mode

Bit 0 – MPCM Multi-Processor Communication Mode
Writing a ‘1’ to this bit enables the Multi-Processor Communication mode: the USART receiver ignores all the incoming frames that do not contain address information. The transmitter is unaffected by the MPCM setting. For more detailed information see 24.3.2.10 Multiprocessor Communication Mode.

24.5.8 Control C - Async Mode

Name: CTRLC
Offset: 0x07
Reset: 0x03
Property: -

This register description is valid for all modes except Master SPI mode. When the USART Communication Mode bits (CMODE) in this register are written to 'MSPI', see Control C - Master SPI Mode for the correct description.

Bit	7	6	5	4	3	2	1	0
	CMODE[1:0]		PMODE[1:0]		SBMODE	CHSIZE[2:0]		
Access	R/W	R/W	R/W	R/W	R/W	R/W	R/W	R/W
Reset	0	0	0	0	0	0	1	1

Bits 7:6 – CMODE[1:0] USART Communication Mode
Writing these bits selects the communication mode of the USART.
Writing a 0x3 to these bits alters the available bit fields in this register, see Control C - Master SPI Mode- Master SPI Mode .

Value	Name	Description
0x0	ASYNCHRONOUS	Asynchronous USART
0x1	SYNCHRONOUS	Synchronous USART
0x2	IRCOM	Infrared Communication
0x3	MSPI	Master SPI

Bits 5:4 – PMODE[1:0] Parity Mode
Writing these bits enables and selects the type of parity generation.
When enabled, the Transmitter will automatically generate and send the parity of the transmitted data bits within each frame. The Receiver will generate a parity value for the incoming data, compare it to the PMODE setting, and set the Parity Error flag (PERR) in the Status register (USART.STATUS) if a mismatch is detected.

Value	Name	Description
0x0	DISABLED	Disabled
0x1	-	Reserved
0x2	EVEN	Enabled, Even Parity
0x3	ODD	Enabled, Odd Parity

Bit 3 – SBMODE Stop Bit Mode
Writing this bit selects the number of stop bits to be inserted by the Transmitter.
The Receiver ignores this setting.

Value	Description
0	1 stop bit
1	2 stop bits

Bits 2:0 – CHSIZE[2:0] Character Size
Writing these bits select the number of data bits in a frame. The Receiver and Transmitter use the same setting. For 9BIT character size, the order of which byte to read or write first, low or high byte of RXDATA or TXDATA is selectable.

Value	Name	Description
0x0	5BIT	5-bit
0x1	6BIT	6-bit
0x2	7BIT	7-bit
0x3	8BIT	8-bit
0x4	-	Reserved
0x5	-	Reserved
0x6	9BIT	9-bit (Low byte first)
0x7	9BIT	9-bit (High byte first)

24.5.9 Control C - Master SPI Mode

Name: CTRLC
Offset: 0x07
Reset: 0x00
Property: -

This register description is only valid when the USART is in Master SPI mode (CMODE written to MSPI). For other CMODE values, see Control C - Async Mode the correct description.

See 24.3.2.5 USART in Master SPI mode for full description of the Master SPI Mode operation.

Bit	7	6	5	4	3	2	1	0
	CMODE[1:0]					UDORD	UCPHA	
Access	R/W	R/W				R/W	R/W	
Reset	0	0				0	0	

Bits 7:6 – CMODE[1:0] USART Communication Mode
Writing these bits selects the communication mode of the USART.
Writing a value different than 0x3 to these bits alters the available bit fields in this register, see Control C - Async Mode.

Value	Name	Description
0x0	ASYNCHRONOUS	Asynchronous USART
0x1	SYNCHRONOUS	Synchronous USART
0x2	IRCOM	Infrared Communication
0x3	MSPI	Master SPI

Bit 2 – UDORD Data Order
Writing this bit selects the frame format.
The Receiver and Transmitter use the same setting. Changing the setting of UDORD will corrupt all ongoing communication for both receiver and transmitter.

Value	Description
0	MSB of the data word is transmitted first
1	LSB of the data word is transmitted first

Bit 1 – UCPHA Clock Phase
The UCPHA bit setting determine if data is sampled on the leading (first) edge or tailing (last) edge of XCKn. Refer to the 24.3.2.1.5 Master SPI Mode Clock Generation for details.

24.5.10 Baud Register

Name: BAUD
Offset: 0x08
Reset: 0x00
Property: -

The USART.BAUDL and USART.BAUDH register pair represents the 16-bit value, USART.BAUD. The low byte [7:0] (suffix L) is accessible at the original offset. The high byte [15:8] (suffix H) can be accessed at offset + 0x01. For more details on reading and writing 16-bit registers, refer to 8.5.6 Accessing 16-bit Registers.

Ongoing transmissions of the Transmitter and Receiver will be corrupted if the baud rate is changed. Writing this register will trigger an immediate update of the baud rate prescaler. For more information of how to set the baud rate, see Table 24-2

Bit	15	14	13	12	11	10	9	8
	BAUD[15:8]							
Access	R/W	R/W	R/W	R/W	R/W	R/W	R/W	R/W
Reset	0	0	0	0	0	0	0	0

Bit	7	6	5	4	3	2	1	0
	BAUD[7:0]							
Access	R/W	R/W	R/W	R/W	R/W	R/W	R/W	R/W
Reset	0	0	0	0	0	0	0	0

Bits 15:8 – BAUD[15:8] USART Baud Rate high byte
These bits hold the MSB of the 16-bit Baud register.

Bits 7:0 – BAUD[7:0] USART Baud Rate low byte
These bits hold the LSB of the 16-bit Baud register.

24.5.11 Debug Control Register

Name: DBGCTRL
Offset: 0x0B
Reset: 0x00
Property: -

Bit	7	6	5	4	3	2	1	0
								DBGRUN
Access								R/W
Reset								0

Bit 0 – DBGRUN Debug Run

Value	Description
0	The peripheral is halted in break debug mode and ignores events.
1	The peripheral will continue to run in break debug mode when the CPU is halted.

24.5.12 IrDA Control Register

Name: EVCTRL
Offset: 0x0C
Reset: 0x00
Property: -

Bit	7	6	5	4	3	2	1	0
								IREI
Access								R/W
Reset								0

Bit 0 – IREI IrDA Event Input Enable
This bit enables the event source for the IRCOM Receiver. If event input is selected for the IRCOM Receiver, the input from the USART's RX pin is automatically disabled.

24.5.13 IRCOM Transmitter Pulse Length Control Register

Name: TXPLCTRL
Offset: 0x0D
Reset: 0x00
Property: -

Bit	7	6	5	4	3	2	1	0
	TXPL[7:0]							
Access	R/W	R/W	R/W	R/W	R/W	R/W	R/W	R/W
Reset	0	0	0	0	0	0	0	0

Bits 7:0 – TXPL[7:0] Transmitter Pulse Length
The 8-bit value sets the pulse modulation scheme for the transmitter. Setting this register will only have effect if IRCOM mode is selected by a USART. By leaving this register value to zero, 3/16 of baud rate period pulse modulation is used. Setting this value from 1 to 254 will give a fixed pulse length coding. The 8-bit value sets the number of system clock periods for the pulse. The start of the pulse will be synchronized with the rising edge of the baud rate clock. Setting the value to 255 (0xFF) will disable pulse coding, letting the RX and TX signals pass through the IRCOM Module unaltered. This enables other features through the IRCOM Module, such as half-duplex USART, Loop-back testing and USART RX input from an Event Channel.
TXPL must be configured before USART transmitter is enabled (TXEN).

24.5.14 IRCOM Receiver Pulse Length Control Register

Name: RXPLCTRL
Offset: 0x0E
Reset: 0x00
Property: -

Bit	7	6	5	4	3	2	1	0
		RXPL[6:0]						
Access		R/W	R/W	R/W	R/W	R/W	R/W	R/W
Reset		0	0	0	0	0	0	0

Bits 6:0 – RXPL[6:0] Receiver Pulse Length
The 8-bit value sets the filter coefficient for the IRCOM transceiver. Setting this register will only have effect if IRCOM mode is selected by a USART.
By leaving this register value to zero, filtering is disabled. Setting this value between 0x01 and 0xFF will enable filtering, where x+1 equal samples are required for the pulse to be accepted.
RXPL must be configured before USART receiver is enabled (RXEN).

25. SPI - Serial Peripheral Interface

25.1 Features

- Full-duplex, Three-wire Synchronous Data Transfer
- Master or Slave Operation
- LSB First or MSB First Data Transfer
- Seven Programmable Bit Rates
- End of Transmission Interrupt Flag
- Write Collision Flag Protection
- Wake-up from Idle Mode
- Double Speed (CK/2) Master SPI Mode

25.2 Overview

The Serial Peripheral Interface (SPI) is a high-speed synchronous data transfer interface using three or four pins. It allows full duplex communication between an AVR device and peripheral devices or between several microcontrollers. The SPI peripheral can be configured as either Master or Slave. The master initiates and controls all data transactions.

The interconnection between master and slave devices with SPI is shown in the block diagram. The system consists of two shift registers and a master clock generator. The SPI master initiates the communication cycle by pulling the desired slave's slave select ($\overline{SS}$) signal low. Master and slave prepare the data to be sent in their respective shift registers, and the master generates the required clock pulses on the SCK line to exchange data. Data is always shifted from master to slave on the master output, slave input (MOSI) line, and from slave to master on the master input, slave output (MISO) line.

This device provides one instance of the SPI peripheral, SPI0.

Related Links

25.2.1 Block Diagram

25.2.1 Block Diagram

Figure 25-1. SPI Block Diagram

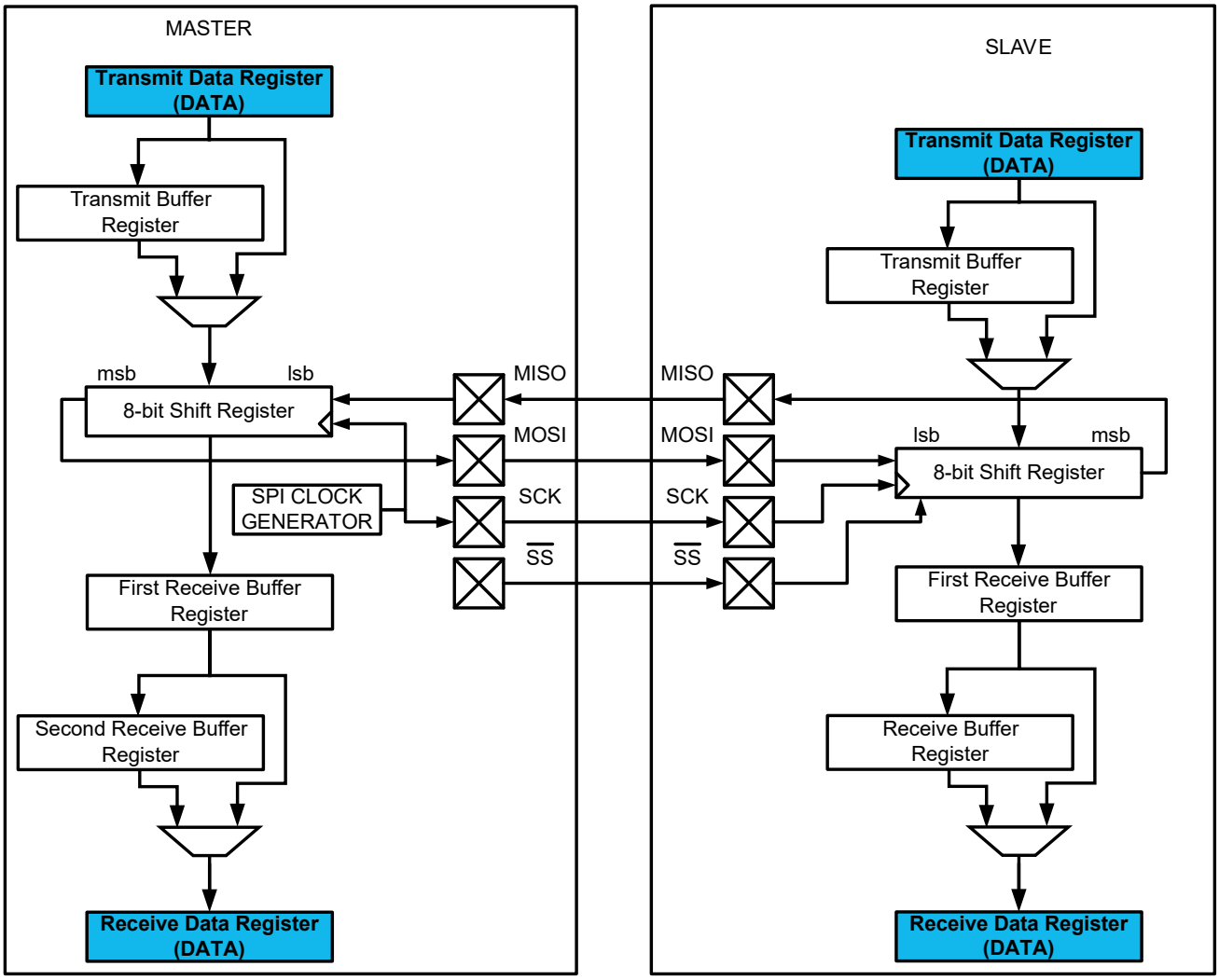

The SPI is built around an 8-bit shift register that will shift out and in data at the same time. The Transmit Data Register and the Receive Data Register are not physical registers, but are mapped to other registers when written or read: Writing the Transmit Data Register (DATA) will write the shift register in Normal mode and the Transmit Buffer Register in Buffer mode. Reading the Receive Data Register (DATA) will read the First Receive Buffer Register in normal mode and the Second Receive Data Register in buffer mode.

In master mode the SPI has a clock generator to generate the SCK clock. In slave mode the received SCK clock is synchronized and sampled to trigger the shifting of data in the shift register.

25.2.2 Signal Description

Table 25-1. Signals in Master and Slave Mode

Signal	Description	Pin configuration	
		Master Mode	Slave Mode
MOSI	Master Out Slave In	User defined	Input
MISO	Master In Slave Out	Input	User defined
SCK	Slave clock	User defined	Input

.....continued			
Signal	Description	Pin configuration	
		Master Mode	Slave Mode
$\overline{SS}$	Slave select	User defined	Input

When the SPI module is enabled, the data direction of the MOSI, MISO, SCK, and SS pins is overridden according to Table 25-1.

The data direction of the pins with "User defined" pin configuration is not controlled by the SPI: The data direction is controlled by the application software configuring the Port peripheral. If these pins are configured with data direction as input, they can be used as regular I/O pin inputs. If these pins are configured with data direction as output, their output value is controlled by the SPI. The MISO pin has a special behavior: When the SPI is in slave mode and the MISO pin is configured as an output, the $\overline{SS}$ pin controls the output buffer of the pin: If $\overline{SS}$ is low, the output buffer drives the pin, if $\overline{SS}$ is high, the pin is tristated.

The data direction of the pins with "Input" pin configuration is controlled by the SPI hardware.

Related Links

5. I/O Multiplexing and Considerations

25.2.3 System Dependencies

In order to use this peripheral, other parts of the system must be configured correctly, as described below.

Table 25-2. SPI System Dependencies

Dependency	Applicable	Peripheral
Clocks	Yes	CLKCTRL
I/O Lines and Connections	Yes	PORT
Interrupts	Yes	CPUINT
Events	Yes	EVSYS
Debug	Yes	UPDI

Related Links

25.2.3.2 I/O Lines and Connections
25.2.3.5 Debug Operation
25.2.3.3 Interrupts
25.2.3.1 Clocks

25.2.3.1 Clocks

This peripheral depends on the peripheral clock.

Related Links

10. CLKCTRL - Clock Controller

25.2.3.2 I/O Lines and Connections

The SPI signals (MOSI, MISO, SCK, $\overline{SS}$) are either input or outputs, depending on whether the SPI is in Master or Slave Mode, as described in the Signal Description.

Using the I/O lines requires configuration of the I/O pins as described in the Signal Description.

Related Links

5. I/O Multiplexing and Considerations
16. PORT - I/O Pin Configuration
25.2.2 Signal Description

25.2.3.3 Interrupts

Using the interrupts of this peripheral requires the Interrupt Controller to be configured first.

Related Links

13. CPUINT - CPU Interrupt Controller
8.7.3 SREG
25.3.3 Interrupts

25.2.3.4 Events

Not applicable.

25.2.3.5 Debug Operation

When run-time debugging, this peripheral will continue normal operation. Halting the CPU in debugging mode will halt normal operation of the peripheral.

If the peripheral is configured to require periodical service by the CPU through interrupts or similar, improper operation or data loss may result during halted debugging.

Related Links

33. UPDI - Unified Program and Debug Interface

25.3 Functional Description

25.3.1 Initialization

Initialize the SPI to a basic functional state by following these steps:

1. Configure the $\overline{SS}$ pin in the Port peripheral.
2. Select SPI Master / Slave operation by writing the Master/Slave Select bit (MASTER) in the Control A register (SPI.CTRLA).
3. In Master mode, select the clock speed by writing the Prescaler bits (PRESC) and the Clock Double bit (CLK2X) in SPI.CTRLA.
4. Optional: Select the data transfer mode by writing to the MODE bits in the Control B register (SPI.CTRLB).
5. Optional: Write the Data Order bit (DORD) in SPI.CTRLA.
6. Optional: Setup buffer mode by writing BUFEN and BUFWR bits in the Control B register (SPI.CTRLB).
7. Optional: To disable the multimaster support in Master mode, write '1' to the Slave Select Disable bit (SSD) in SPI.CTRLB.
8. Enable the SPI by writing a '1' to the ENABLE bit in SPI.CTRLA.

Related Links

5. I/O Multiplexing and Considerations
16. PORT - I/O Pin Configuration
25.2.2 Signal Description

25.3.2 Operation

25.3.2.1 Master Mode Operation

When the SPI is configured in master mode, a write to the DATA register will start a new transfer. The SPI clock generator starts and the hardware shifts the eight bits into the selected slave. After the byte is shifted out the interrupt flag (INTFLAGS.IF) in SPI.INTFLAGS is set. The SPI Master can operate in two modes, Normal and Buffered, as explained below.

25.3.2.1.1 $\overline{SS}$ Pin Functionality in Master Mode - Multi-Master Support

In Master mode, the Slave Select Disable bit in Control Register B (SSD bit in SPIn.CTRLB) controls how the SPI uses the $\overline{SS}$ pin.

- If SSD in SPIn.CTRLB is '0', the SPI can use the $\overline{SS}$ pin to transition from Master to Slave mode. This allows multiple SPI masters on the same SPI bus.

- If SSD in SPIn.CTRLB is '0', and the $\overline{SS}$ pin is configured as an output pin, it can be used as a regular I/O pin or by other peripheral modules, and will not affect the SPI system.
- If SSD in SPIn.CTRLB is '1', the SPI does not use the $\overline{SS}$ pin, and it can be used as a regular I/O pin, or by other peripheral modules.

If the SSD bit in SPIn.CTRLB is '0', and the $\overline{SS}$ is configured as an input pin, the $\overline{SS}$ pin must be held high to ensure master SPI operation. A low level will be interpreted as another master is trying to take control of the bus. This will switch the SPI into Slave mode, and the hardware of the SPI will perform the following actions:

1. The Master bit in the SPI Control A Register (MASTER in SPIn.CTRLA) is cleared, and the SPI system becomes a slave. The direction of the SPI pins will be switched when conditions in Table 25-3 are met.
2. The Interrupt Flag in the Interrupt Flags register (IF in SPIn.INTFLAGS) will be set. If the interrupt is enabled and the global interrupts are enabled, the interrupt routine will be executed.

Table 25-3. Overview of the $\overline{SS}$ Pin Functionality when the SSD Bit in SPIn.CTRLB is '0'

$\overline{SS}$ Configuration	$\overline{SS}$ Pin-Level	Description
Input	High	Master activated (selected)
	Low	Master deactivated, switched to Slave mode
Output	High	Master activated (selected)
	Low	

Note: If the device is in Master mode and it cannot be ensured that the $\overline{SS}$ pin will stay high between two transmissions, the status of the Master bit (the MASTER bit in SPIn.CTRLA) has to be checked before a new byte is written. After the Master bit has been cleared by a low level on the $\overline{SS}$ line, it must be set by the application to re-enable the SPI Master mode.

25.3.2.1.2 Normal Mode

In Normal mode, the system is single buffered in the transmit direction and double buffered in the receive direction. This influences the data handling in the following ways:

1. New bytes to be sent cannot be written to the data register (SPI.DATA) before the entire transfer has completed. A premature write will cause corruption of the transmitted data, and the hardware will set the Write Collision Flag (INTFLAGS.WRCOL).
2. Received bytes are written to First Receive Buffer Register immediately after the transmission is completed.
3. The First Receive Buffer Register has to be read before the next transmission is completed or data will be lost. This register is read by reading SPI.DATA.
4. The Transmit Buffer Register and Second Receive Buffer Register are not used in Normal Mode.

After a transfer has completed, the Interrupt Flag (INTFLAGS.IF) will be set in the Interrupt Flags Register (SPI.INTFLAGS). This will cause the corresponding interrupt to be executed if this interrupt and the global interrupts are enabled. Setting the Interrupt Enable (IE) bit in the Interrupt Control Register (SPI.INTCTRL) will enable the interrupt.

25.3.2.1.3 Buffer Mode

The Buffer Mode is enabled by setting the BUFEN bit in SPI.CTRLB. The BUFWR bit in SPI.CTRLB has no effect in Master mode. In Buffer Mode the system is double buffered in the transmit direction and triple buffered in the receive direction. This influences the data handling the following ways:

1. New bytes to be sent can be written to the data register (DATA) as long as the Data Register Empty Interrupt Flag (DREIF) in the Interrupt Flag Register (INTFLAGS) is set. The first write will be transmitted right away and a following write will go to the transmit buffer register.
2. A received byte is placed in a two-entry RX FIFO comprised of the First and Second Receive Buffer Registers immediately after the transmission is completed.
3. The Data Register is used to read from the RX FIFO. The RX FIFO must be read at least every second transfer to avoid any loss of data.

If both the Shift Register and the Transmit Buffer Register becomes empty, the Transfer Complete Interrupt Flag (TXCIF) in the Interrupt Flags Register (INTFLAGS) will be set. This will cause the corresponding interrupt to be

executed if this interrupt and the global interrupts are enabled. Setting the Transfer Complete Interrupt Enable (TXCIE) in the Interrupt Control Register (INTCTRL) enables the Transfer Complete Interrupt.

25.3.2.2 Slave Mode

In Slave Mode, the SPI peripheral receives SPI clock and Slave Select from a Master. Slave Mode supports three operational modes: One unbuffered mode and two buffered modes. In Slave Mode, the control logic will sample the incoming signal on the SCK pin. To ensure correct sampling of this clock signal, the minimum low and high periods must each be longer than two peripheral clock cycles.

25.3.2.2.1 $\overline{SS}$ Pin Functionality in Slave Mode

The Slave Select ($\overline{SS}$) pin plays a central role in operation of the SPI. Depending on the mode the SPI is in and the configuration of this pin, it can be used to activate or deactivate devices. The $\overline{SS}$ pin is used as a chip select pin.

In slave mode, $\overline{SS}$, MOSI and SCK are always inputs. The behavior of the MISO pin depends on the configured data direction of the pin in the port peripheral and the value of $\overline{SS}$: When $\overline{SS}$ is driven low, the SPI is activated and will respond to received SCK pulses by clocking data out on MISO if the user has configured the data direction of the MISO pin as output. When $\overline{SS}$ is driven high the SPI is deactivated, meaning that it will not receive incoming data. If the MISO pin data direction is configured as output, the MISO pin will be tristated. The following table shows an overview of the $\overline{SS}$ pin functionality.

Table 25-4. Overview of the $\overline{SS}$ Pin Functionality

$\overline{SS}$ Configuration	$\overline{SS}$ Pin-level	Description	MISO pin mode	
			Port direction = output	Port direction = input
Always Input	High	Slave deactivated (deselected)	Tristated	Input
	Low	Slave activated (selected)	Output	Input

Note:
In slave mode, the SPI state machine will be reset when the $\overline{SS}$ pin is brought high. If the $\overline{SS}$ is brought high during a transmission, the SPI will stop sending and receiving immediately and both data received and data sent must be considered as lost. As the $\overline{SS}$ pin is used to signal the start and end of a transfer, it is useful for achieving packet/byte synchronization, and keeping the slave bit counter synchronized with the master clock generator.

25.3.2.2.2 Normal Mode

In Normal Mode, the SPI peripheral will remain idle as long as the $\overline{SS}$ pin is driven high. In this state, software may update the contents of the DATA register, but the data will not be shifted out by incoming clock pulses on the SCK pin until the $\overline{SS}$ pin is driven low. If $\overline{SS}$ is driven low, the slave will start to shift out data on the first SCK clock pulse. When one byte has been completely shifted, the SPI Interrupt flag (IF) in SPI.INTFLAGS is set.

The user application may continue placing new data to be sent into the SPI.DATA register before reading the incoming data. New bytes to be sent cannot be written to SPI.DATA before the entire transfer has completed. A premature write will be ignored, and the hardware will set the Write Collision Flag (INTFLAGS.WRCOL).

When $\overline{SS}$ is driven high, the SPI logic is halted, and the SPI slave will not receive any new data. Any partially received packet in the shift register will be lost.

Figure 25-2. SPI timing diagram in normal mode (buffer mode not enabled)

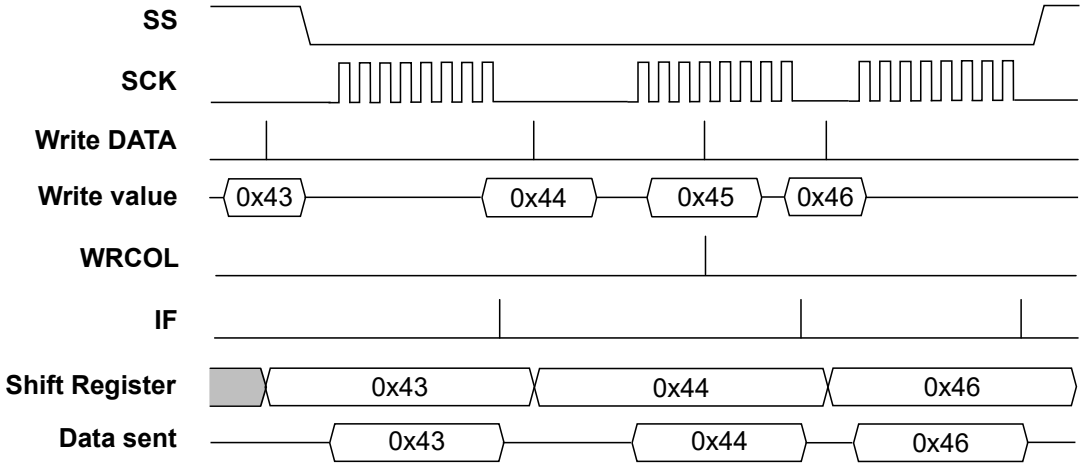

The figure shows three transfers and one write to the DATA register while the SPI is busy with a transfer. This write will be ignored and the Write Collision Flag (INTFLAGS.WRCOL) is set.

25.3.2.2.3 Buffer Mode

To avoid data collisions, the SPI peripheral can be configured in buffered mode by writing a '1' to the Buffer Mode Enable bit (CTRLB.BUFEN) in the Control B register (SPI.CTRLB). In this mode, the SPI has additional interrupt flags and extra buffers. The extra buffers are shown in Figure 25-1. There are two different modes for the buffer mode, selected with the Buffer Mode Wait for Receive bit (BUFWR). The two different modes are described below with timing diagrams.

Figure 25-3. SPI Timing Diagram in buffer mode with CTRLB.BUFWR set to zero

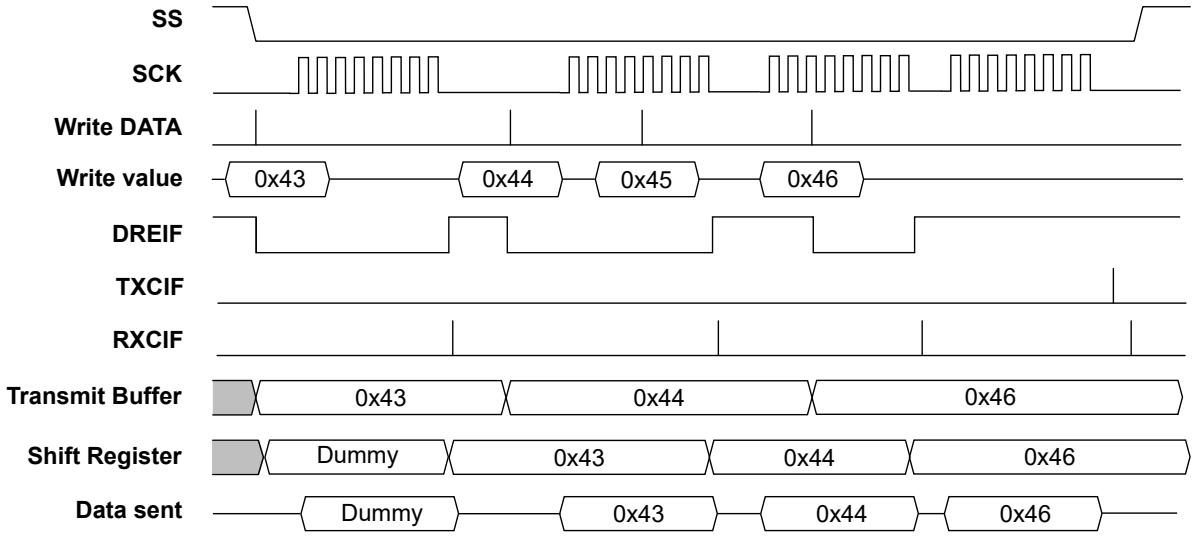

All writes to the Data Register (DATA) goes to the Transmit Buffer Register. As the figure above shows 0x43 is written to the Data Register (DATA), but it is not immediately transferred to the shift register so the first byte sent will be a dummy byte. The value of the dummy byte is whatever was in the shift register at the time, usually the last received byte. After the first dummy transfer is completed the value 0x43 is transferred to the shift register. Then 0x44 is written to the Data Register (DATA) and goes to the Transmit Buffer Register. A new transfer is started and 0x43 will be sent. The value 0x45 is written to the Data Register (DATA), but the Transmit Buffer Register is not updated since it is already full containing 0x44 and the Data Register Empty Interrupt Flag (INTFLAGS.DREIF) is low. The value 0x45 will be lost. After the transfer the value 0x44 is moved to the shift register. During the next transfer 0x46 is written to the Data Register (DATA) and 0x44 is sent out. After the transfer is complete 0x46 is copied into the shift register and it is sent out in the next transfer.

The Data Register Empty Interrupt Flag (INTFLAGS.DREIF) goes low every time the Transmit Buffer Register is written and goes high after a transfer when the previous value in the Transmit Buffer Register is copied into the shift

register. The Receive Complete Interrupt Flag (INTFLAGS.RXCIF) is set one cycle after the Data Register Empty Interrupt Flag (INTFLAGS.DREIF) goes high. The Transfer Complete Interrupt Flag (INTFLAGS.TXCIF) is set one cycle after the Receive Complete Interrupt Flag (INTFLAGS.RXCIF) is set when both the value in the shift register and the Transmit Buffer Register has been sent.

Figure 25-4. SPI Timing Diagram in buffer mode with CTRLB.BUFWR set to one

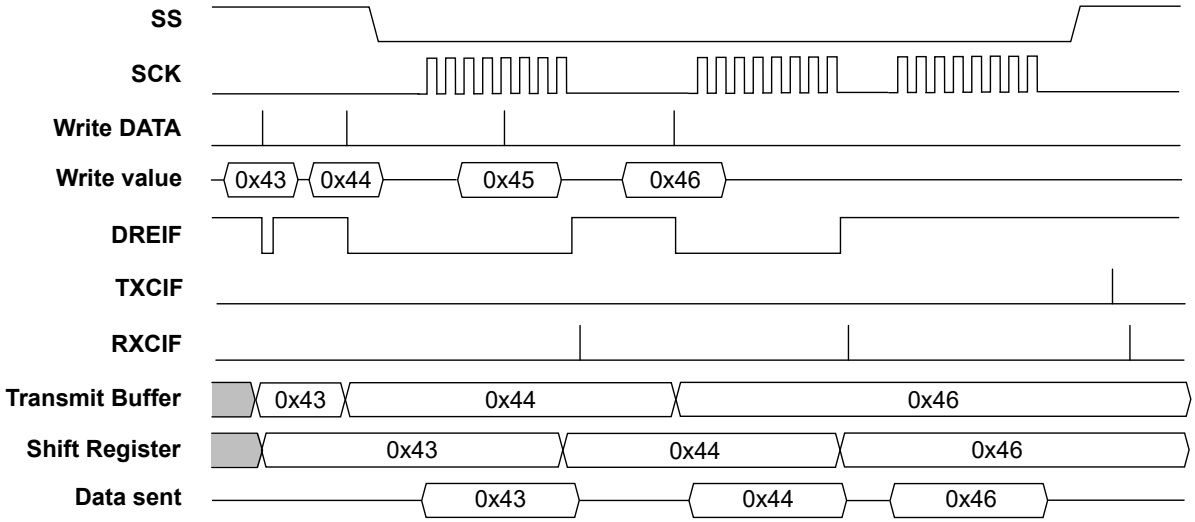

All writes to the Data Register (DATA) goes to the transmit buffer. As the figure above shows 0x43 is written to the Data Register (DATA) and since the Slave Select pin is high it is copied to the shift register the next cycle. Then the next write (0x44) will go to the Transmit Buffer Register. During the first transfer the value 0x43 will be shifted out. In the figure the value 0x45 is written to the Data Register (DATA), but the Transmit Buffer Register is not updated since the Data Register Empty Interrupt Flag (INTFLAGS.DREIF) is low. After the transfer is completed the value 0x44 form the Transmit Buffer Register is copied over to the shift register. The value 0x46 is written to the Transmit Buffer Register. During the next two transfers 0x44 and 0x46 is shifted out. The Flags behaves the same as with Buffer Mode Wait for Receive Bit (CTRLB.BUFWR) set to zero.

25.3.2.3 Data Modes

There are four combinations of SCK phase and polarity with respect to serial data. The desired combination is selected by writing to the MODE bits in the Control B register (SPI.CTRLB).

The SPI data transfer formats are shown below. Data bits are shifted out and latched in on opposite edges of the SCK signal, ensuring sufficient time for data signals to stabilize.

The leading edge is the first clock edge of a clock cycle. The trailing edge is the last clock edge of a clock cycle.

Figure 25-5. SPI Data Transfer Modes

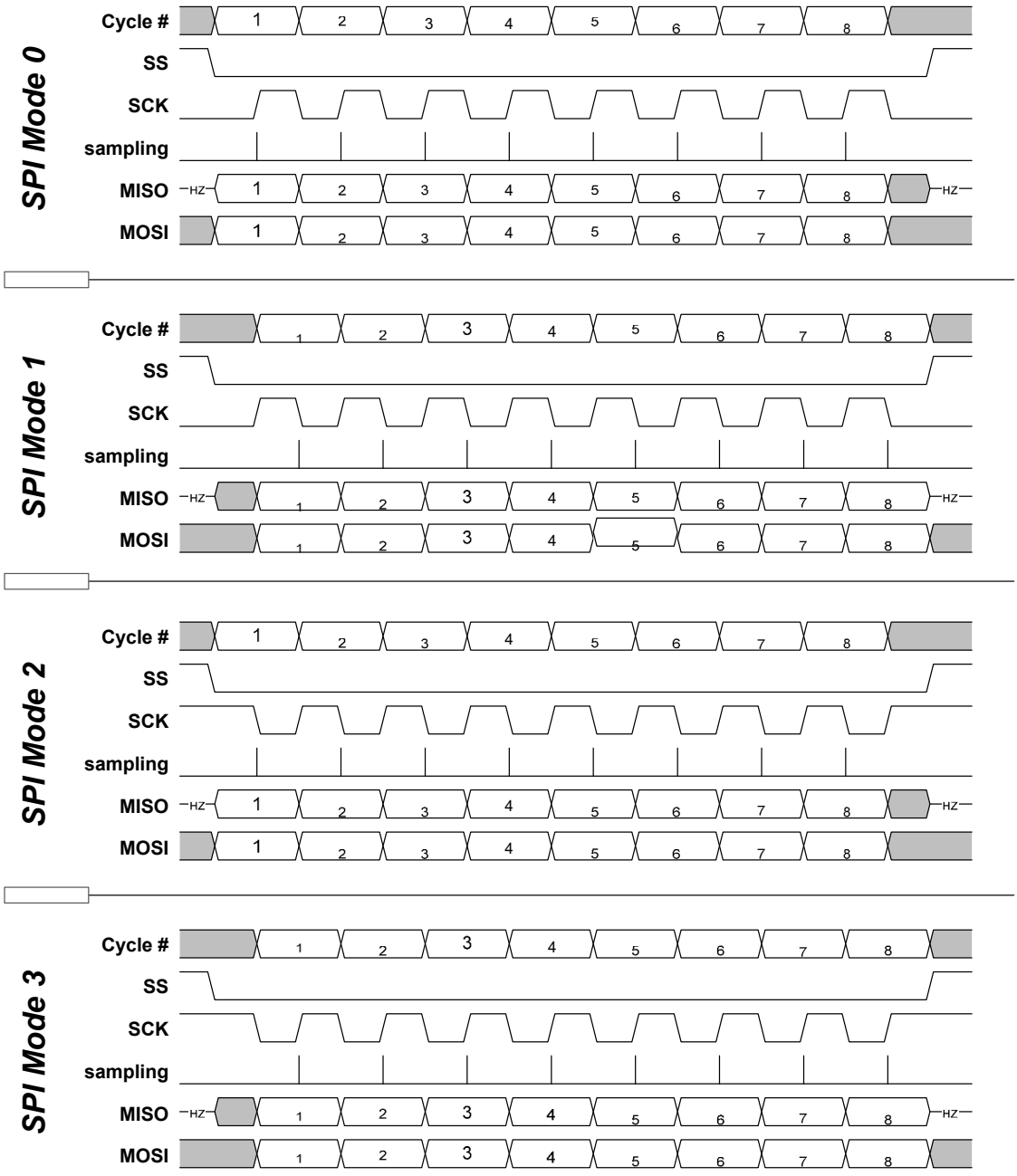

25.3.3 Interrupts

Table 25-5. Available Interrupt Vectors and Sources

Offset	Name	Vector Description	Conditions
0x00	SPI	SPI interrupt	• SSI: Slave Select Trigger Interrupt • DRE: Data Register Empty Interrupt • TXC: Transfer Complete Interrupt • RXC: Receive Complete Interrupt

When an interrupt condition occurs, the corresponding Interrupt Flag is set in the Interrupt Flags register of the peripheral (*peripheral*.INTFLAGS).

An interrupt source is enabled or disabled by writing to the corresponding enable bit in the peripheral's Interrupt Control register (*peripheral*.INTCTRL).

An interrupt request is generated when the corresponding interrupt source is enabled and the Interrupt Flag is set. The interrupt request remains active until the Interrupt Flag is cleared. See the peripheral's INTFLAGS register for details on how to clear Interrupt Flags.

Related Links

8.7.3 SREG

13. CPUINT - CPU Interrupt Controller

25.3.4 Sleep Mode Operation

The SPI will continue working in Idle sleep mode. When entering any deeper sleep mode, an active transaction will be stopped.

Related Links

11. SLPCTRL - Sleep Controller

25.3.5 Configuration Change Protection

Not applicable.

25.4 Register Summary - SPI

Offset	Name	Bit Pos.								
0x00	CTRLA	7:0		DORD	MASTER	CLK2X		PRESC[1:0]		ENABLE
0x01	CTRLB	7:0	BUFEN	BUFWR				SSD	MODE[1:0]	
0x02	INTCTRL	7:0	RXCIE	TXCIE	DREIE	SSIE				IE
0x03	INTFLAGS	7:0	RXCIF/IF	TXCIF/ WRCOL	DREIF	SSIF				BUFOVF
0x04	DATA	7:0	DATA[7:0]							

25.5 Register Description

25.5.1 Control A

Name: CTRLA
Offset: 0x00 [ID-000004d0]
Reset: 0x00
Property: -

Bit	7	6	5	4	3	2	1	0
		DORD	MASTER	CLK2X		PRESC[1:0]		ENABLE
Access		R/W	R/W	R/W		R/W	R/W	R/W
Reset		0	0	0		0	0	0

Bit 6 – DORD Data Order

Value	Description
0	The MSB of the data word is transmitted first.
1	The LSB of the data word is transmitted first.

Bit 5 – MASTER Master/Slave Select
Write this bit to configure SPI in desired mode.
If $\overline{SS}$ is configured as input and driven low while this bit is '1', this bit is cleared, and the IF flag in SPI.INTFLAGS is set. The user has to write MASTER=1 again to re-enable SPI Master mode.
This behavior is controlled by the Slave Select Disable bit (SSD) in SPI.CTRLB.

Value	Description
0	SPI Slave mode selected
1	SPI Master mode selected

Bit 4 – CLK2X Clock Double
When this bit is written to '1' the SPI speed (SCK frequency, after internal prescaler) is doubled in Master mode.

Value	Description
0	SPI speed (SCK frequency) is not doubled.
1	SPI speed (SCK frequency) is doubled in Master mode

Bits 2:1 – PRESC[1:0] Prescaler
This bit field controls the SPI clock rate configured in master mode. These bits have no effect in slave mode. The relationship between SCK and the peripheral clock frequency (f_{CLK_PER}) is shown below.
The output of the SPI prescaler can be doubled by writing the CLK2X bit to '1'.

Value	Name	Description
0x0	DIV4	CLK_PER/4
0x1	DIV16	CLK_PER/16
0x2	DIV64	CLK_PER/64
0x3	DIV128	CLK_PER/128

Bit 0 – ENABLE SPI Enable

Value	Description
0	SPI is disabled.
1	SPI is enabled.

25.5.2 Control B

Name: CTRLB
Offset: 0x01 [ID-000004d0]
Reset: 0x00
Property: -

Bit	7	6	5	4	3	2	1	0
	BUFEN	BUFWR				SSD	MODE[1:0]	
Access	R/W	R/W				R/W	R/W	R/W
Reset	0	0				0	0	0

Bit 7 – BUFEN Buffer Mode Enable
Writing this bit to '1' enables Buffer Mode, meaning two buffers in receive direction, one buffer in transmit direction, and separate interrupt flags for both transmit complete and receive complete.

Bit 6 – BUFWR Buffer Mode Wait for Receive
When writing this bit to '0' the first data transferred will be a dummy sample.

Value	Description
0	One SPI transfer must be completed before the data is copied into the shift register.
1	When writing to the data register when the SPI is enabled and $\overline{SS}$ is high, the first write will go directly to the shift register.

Bit 2 – SSD Slave Select Disable
When this bit is set and when operating as SPI Master (MASTER=1 in SPI.CTRLA), $\overline{SS}$ does not disable Master Mode.

Value	Description
0	Enable the Slave Select line when operating as SPI Master.
1	Disable the Slave Select line when operating as SPI Master.

Bits 1:0 – MODE[1:0] Mode
These bits select the transfer mode. The four combinations of SCK phase and polarity with respect to the serial data are shown in the table below. These bits decide whether the first edge of a clock cycle (leading edge) is rising or falling, and whether data setup and sample occur on the leading or trailing edge. When the leading edge is rising, the SCK signal is low when idle, and when the leading edge is falling, the SCK signal is high when idle.

Value	Name	Description
0x0	0	Leading edge: Rising, sample Trailing edge: Falling, setup
0x1	1	Leading edge: Rising, setup Trailing edge: Falling, sample
0x2	2	Leading edge: Falling, sample Trailing edge: Rising, setup
0x3	3	Leading edge: Falling, setup Trailing edge: Rising, sample

Related Links
25.3.2.3 Data Modes

25.5.3 Interrupt Control

Name: INTCTRL
Offset: 0x02 [ID-000004d0]
Reset: 0x00
Property: -

Bit	7	6	5	4	3	2	1	0
	RXCIE	TXCIE	DREIE	SSIE				IE
Access	R/W	R/W	R/W	R/W				R/W
Reset	0	0	0	0				0

Bit 7 – RXCIE Receive Complete Interrupt Enable
In buffer mode this bit enables the receive complete interrupt. The enabled interrupt will be triggered when the RXCIF flag in the INTFLAG register is set. In non-buffer mode this bit is zero.

Bit 6 – TXCIE Transfer Complete Interrupt Enable
In buffer mode this bit enables the transfer complete interrupt. The enabled interrupt will be triggered when the TXCIF flag in the INTFLAG register is set. In non-buffer mode this bit is zero.

Bit 5 – DREIE Data Register Empty Interrupt Enable
In buffer mode this bit enables the data register empty interrupt. The enabled interrupt will be triggered when the DREIF flag in the INTFLAG register is set. In non-buffer mode this bit is zero.

Bit 4 – SSIE Slave Select Trigger Interrupt Enable
In buffer mode this bit enables the Slave Select interrupt. The enabled interrupt will be triggered when the SSIF flag in the INTFLAG register is set. In non-buffer mode this bit is zero.

Bit 0 – IE Interrupt Enable
This bit enables the SPI interrupt when the SPI is not in buffer mode. The enabled interrupt will be triggered when RXCIF/IF is set in the INTFLAG register.

25.5.4 Interrupt Flags

Name: INTFLAGS
Offset: 0x03 [ID-000004d0]
Reset: 0x00
Property: -

Bit	7	6	5	4	3	2	1	0
	RXCIF/IF	TXCIF/WRCOL	DREIF	SSIF				BUFOVF
Access	R/W	R/W	R/W	R/W				R/W
Reset	0	0	0	0				0

Bit 7 – RXCIF/IF Receive Complete Interrupt Flag/Interrupt Flag
RXCIF: In buffer mode this flag is set when there is unread data in the receive buffer and cleared when the receive buffer is empty (i.e., does not contain any unread data). In non-buffer mode this bit does not have any effect.
When interrupt-driven data reception is used, the receive complete interrupt routine must read the received data from DATA in order to clear RXCIF. If not, a new interrupt will occur directly after the return from the current interrupt. This flag can also be cleared by writing a one to its bit location.
IF: This flag is set when a serial transfer is complete and one byte is completely shifted in/out of the DATA register. If $\overline{SS}$ is configured as input and is driven low when the SPI is in master mode, this will also set this flag. IF is cleared by hardware when executing the corresponding interrupt vector. Alternatively, the IF flag can be cleared by first reading the SPI.INTFLAGS register when IF is set, and then accessing the DATA register.

Bit 6 – TXCIF/WRCOL Transfer Complete Interrupt Flag/Write Collision Flag
TXCIF: In buffer mode this flag is set when all the data in the transmit shift register has been shifted out and there are no new data in the transmit buffer (DATA). The flag is cleared by writing a one to its bit location. In non-buffer mode this bit does not have any effect.
WRCOL: The WRCOL flag is set if the DATA register is written to before a complete byte has been shifted out. This flag is cleared by first reading the SPI.INTFLAGS register when WRCOL is set, and then accessing the DATA register.

Bit 5 – DREIF Data Register Empty Interrupt Flag
In buffer mode this flag indicates whether the transmit buffer (DATA) is ready to receive new data. The flag is one when the transmit buffer is empty and zero when the transmit buffer contains data to be transmitted that has not yet been moved into the shift register. DREIF is set to '0' after a reset to indicate that the transmitter is ready. In non-buffer mode this bit is always zero.
DREIF is cleared by writing DATA. When interrupt-driven data transmission is used, the data register empty interrupt routine must either write new data to DATA in order to clear DREIF or disable the data register empty interrupt. If not, a new interrupt will occur directly after the return from the current interrupt.

Bit 4 – SSIF Slave Select Trigger Interrupt Flag
In buffer mode this flag indicates that the SPI has been in master mode and the SS line has been pulled low externally so the SPI is now working in slave mode. The flag will only be set if the Slave Select Disable bit (SSD) is not '1'. The flag is cleared by writing a one to its bit location. In non-buffer mode this bit is always zero.

Bit 0 – BUFOVF Buffer Overflow
This flash is only used in buffer mode. This flag indicates data loss due to a receiver buffer full condition. This flag is set if a buffer overflow condition is detected. A buffer overflow occurs when the receive buffer is full (two characters) and a third byte has been received in the shift register. If there is no transmit data the buffer overflow will not be set before the start of a new serial transfer. This flag is valid until the receive buffer (DATA) is read. Always write this bit location to zero when writing the SPI.INTFLAGS register. In non-buffer mode this bit is always zero

25.5.5 Data

Name: DATA
Offset: 0x04 [ID-000004d0]
Reset: 0x00
Property: -

Bit	7	6	5	4	3	2	1	0
	DATA[7:0]							
Access	R/W	R/W	R/W	R/W	R/W	R/W	R/W	R/W
Reset	0	0	0	0	0	0	0	0

Bits 7:0 – DATA[7:0] SPI Data
The DATA register is used for sending and receiving data. Writing to the register initiates the data transmission, and the byte written to the register will be shifted out on the SPI output line.
Reading this register in buffer mode will read the second receive buffer and the contents of the first receive buffer will be moved to the second receive buffer.

26. TWI - Two Wire Interface

26.1 Features

- Bidirectional, Two-Wire Communication Interface
- Philips I^2C compatible:
  - Standard mode (Sm/100 kHz with slew-rate limited output)
  - Fast mode (Fm/400 kHz with slew-rate limited output)
  - Fast mode plus (Fm+/1 MHz with ×10 output drive strength)
- System Management Bus (SMBus) Compatible (100 kHz with Slew-Rate Limited Output):
  - Support arbitration between start/repeated start and data bit
  - Slave arbitration allows support for the Address Resolution Protocol (ARP)
  - Configurable SMBus Layer 1 time-outs in hardware
- Independent Master and Slave Operation:
  - Single or multi-master bus operation with full arbitration support
- Flexible Slave Address Match Hardware Operating in All Sleep Modes, Including Power-Down:
  - 7-bit and general call address recognition
  - 10-bit addressing support in collaboration with software
  - Address mask register allows address range masking - alternatively, it can be used as a secondary address match
  - Optional software address recognition for an unlimited number of addresses
- Input Filter For Bus Noise Suppression

26.2 Overview

The Two-Wire Interface (TWI) peripheral is a bidirectional, two-wire communication interface. It is I^2C and System Management Bus (SMBus) compatible. The only external hardware needed to implement the bus is one pull-up resistor on each bus line.

Any device connected to the bus must act as a master or a slave. The master initiates a data transaction by addressing a slave on the bus and telling whether it wants to transmit or receive data. One bus can have many slaves and one or several masters that can take control of the bus. An arbitration process handles priority if more than one master tries to transmit data at the same time. Mechanisms for resolving bus contention are inherent in the protocol.

The TWI peripheral supports master and slave functionality. The master and slave functionality are separated from each other, and can be enabled and configured separately. The master module supports multi-master bus operation and arbitration. It contains the baud rate generator. All 100kHz, 400kHz, and 1MHz bus frequencies are supported. Quick command and smart mode can be enabled to auto-trigger operations and reduce software complexity.

The slave module implements 7-bit address match and general address call recognition in hardware. 10-bit addressing is also supported. A dedicated address mask register can act as a second address match register or as a register for address range masking. The slave continues to operate in all sleep modes, including power-down mode. This enables the slave to wake up the device from all sleep modes on TWI address match. It is possible to disable the address matching to let this be handled in software instead.

The TWI peripheral will detect START and STOP conditions, bus collisions, and bus errors. Arbitration lost, errors, collision, and clock hold on the bus are also detected and indicated in separate status flags available in both master and slave modes.

This device provides one instance of the TWI peripheral, TWI0.

26.2.1 Block Diagram

Figure 26-1. TWI Block Diagram

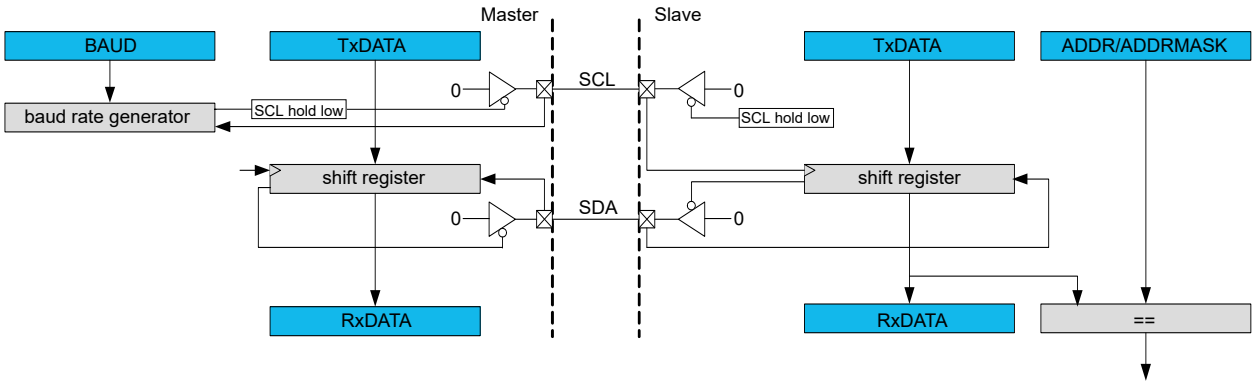

26.2.2 Signal Description

Signal	Description	Type
SCL	Serial clock line	Digital I/O
SDA	Serial data line	Digital I/O

Related Links

5. I/O Multiplexing and Considerations

26.2.3 System Dependencies

In order to use this peripheral, other parts of the system must be configured correctly, as described below.

Table 26-1. TWI System Dependencies

Dependency	Applicable	Peripheral
Clocks	Yes	CLKCTRL
I/O Lines and Connections	Yes	PORT
Interrupts	Yes	CPUINT
Events	No	-
Debug	Yes	UPDI

Related Links

26.2.3.1 Clocks
26.2.3.5 Debug Operation
26.2.3.2 I/O Lines and Connections
26.2.3.3 Interrupts

26.2.3.1 Clocks

This peripheral requires the system clock (CLK_PER). The relationship between CLK_PER and the TWI bus clock (SCL) is explained in the TWI.MBAUD register.

Related Links

10. CLKCTRL - Clock Controller
26.5.6 MBAUD

26.2.3.2 I/O Lines and Connections

Using the I/O lines of the peripheral requires configuration of the I/O pins.

26.2.3.3 Interrupts
Using the interrupts of this peripheral requires the Interrupt Controller to be configured first.

26.2.3.4 Events
Not applicable.

26.2.3.5 Debug Operation
When run-time debugging, this peripheral will continue normal operation. Halting the CPU in debugging mode will halt normal operation of the peripheral.

This peripheral can be forced to operate with halted CPU by writing a '1' to the Debug Run bit (DBGRUN) in the Debug Control register of the peripheral (*peripheral*.DBGCTRL).

When the CPU is halted in debug mode and DBGRUN=1, that reading/writing the DATA register will neither trigger a bus operation nor cause transmit and clear flags.

If the peripheral is configured to require periodical service by the CPU through interrupts or similar, improper operation or data loss may result during halted debugging.

Related Links
33. UPDI - Unified Program and Debug Interface

26.3 Functional Description

26.3.1 Initialization
Before enabling the master or the slave unit, ensure that the correct settings for SDASETUP, SDAHOLD, and, if used, Fast-mode plus (FMPEN) are stored in TWI.CTRLA.

Master Operation
It is recommended to write to the Master Baud Rate register (TWIn.BAUD) before enabling the TWI master since TIMEOUT is dependent on the baud rate setting. To start the TWI master, write a ‘1’ to the ENABLE bit and configure an appropriate TIMEOUT if using the TWI in an SMBus environment. The ENABLE and TIMEOUT bits are all located in the Master Control A register (TWIn.MCTRLA). If no TIMEOUT value is set, which is the case for I²C operation, the bus state must be manually set to IDLE by writing 0x1 to BUSSTATE in TWIn.MSTATUS at a safe point in time. Note that unlike the SMBus specification, the I²C specification does not specify when it is safe to assume that the bus is idle in a multi-master system. The application can solve this by ensuring that after all masters connected to the bus are enabled, one supervising master performs a transfer before any of the other masters. The stop condition of this initial transfer will indicate to the Bus State Monitor logic that the bus is idle and ready.

Slave Operation
To start the TWI slave, write the Slave Address (TWIn.SADDR), and write a '1' to the ENABLE bit in the Slave Control A register (TWIn.SCTRLA). The TWI peripheral will wait to receive a byte addressed to it.

26.3.2 General TWI Bus Concepts
The TWI provides a simple, bidirectional, two-wire communication bus consisting of a serial clock line (SCL) and a serial data line (SDA). The two lines are open-collector lines (wired-AND), and pull-up resistors (Rp) are the only external components needed to drive the bus. The pull-up resistors provide a high level on the lines when none of the connected devices are driving the bus.

The TWI bus is a simple and efficient method of interconnecting multiple devices on a serial bus. A device connected to the bus can be a master or slave, where the master controls the bus and all communication.

Figure 26-2 illustrates the TWI bus topology.

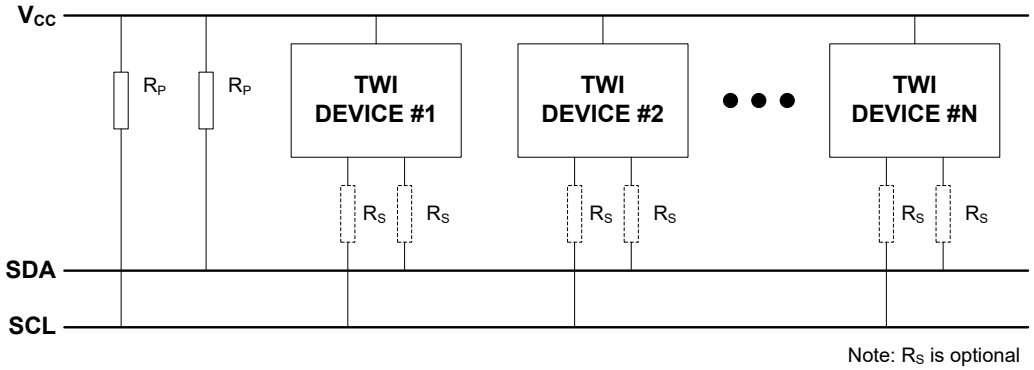

Figure 26-2. TWI Bus Topology

An unique address is assigned to all slave devices connected to the bus, and the master will use this to address a slave and initiate a data transaction.

Several masters can be connected to the same bus, called a multi-master environment. An arbitration mechanism is provided for resolving bus ownership among masters, since only one master device may own the bus at any given time.

A device can contain both master and slave logic, and can emulate multiple slave devices by responding to more than one address.

A master indicates the start of a transaction by issuing a START condition (S) on the bus. An address packet with a slave address (ADDRESS) and an indication whether the master wishes to read or write data (R/$\overline{W}$) are then sent. After all data packets (DATA) are transferred, the master issues a STOP condition (P) on the bus to end the transaction. The receiver must acknowledge (A) or not-acknowledge ($\overline{A}$) each byte received.

Figure 26-3 shows a TWI transaction.

Figure 26-3. Basic TWI Transaction Diagram Topology for a 7-bit Address Bus

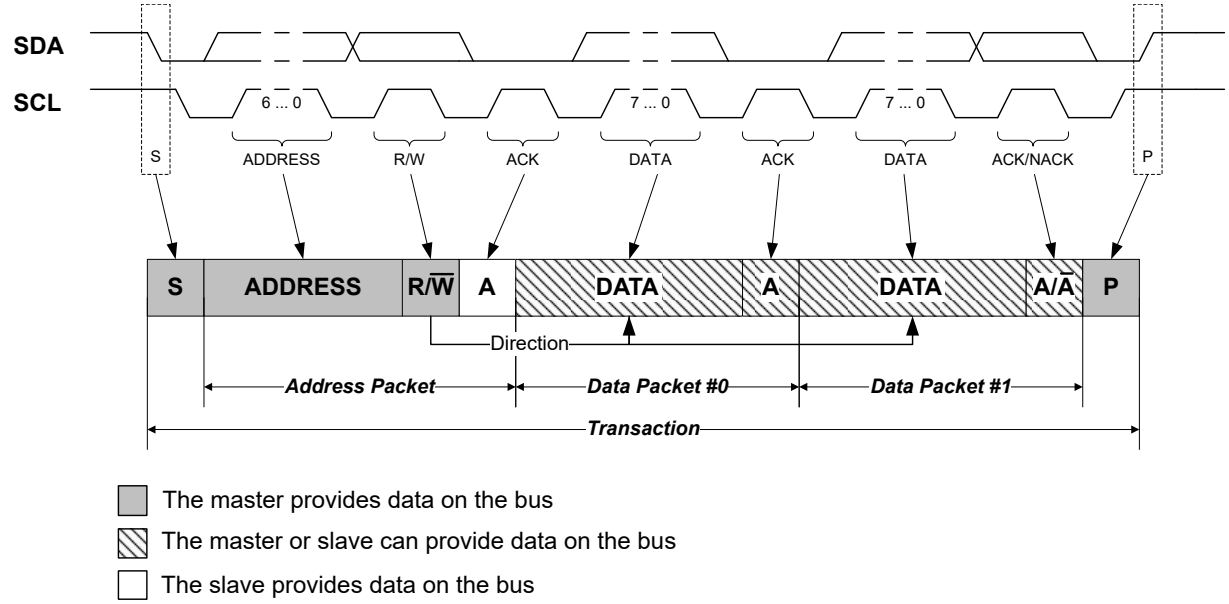

The master provides data on the bus

The master or slave can provide data on the bus

The slave provides data on the bus

The master provides the clock signal for the transaction, but a device connected to the bus is allowed to stretch the low-level period of the clock to decrease the clock speed.

26.3.2.1 START and STOP Conditions

Two unique bus conditions are used for marking the beginning (START) and end (STOP) of a transaction. The master issues a START condition (S) by indicating a high-to-low transition on the SDA line while the SCL line is kept high. The master completes the transaction by issuing a STOP condition (P), indicated by a low-to-high transition on the SDA line while SCL line is kept high.

Figure 26-4. START and STOP Conditions

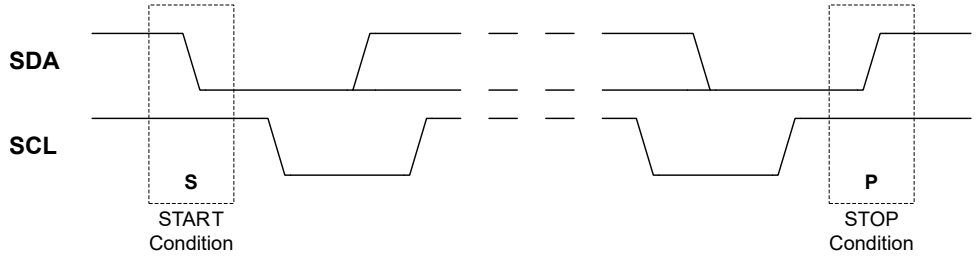

Multiple START conditions can be issued during a single transaction. A START condition that is not directly following a STOP condition is called a repeated START condition (Sr).

26.3.2.2 Bit Transfer

As illustrated by Figure 26-5, a bit transferred on the SDA line must be stable for the entire high period of the SCL line. Consequently the SDA value can only be changed during the low period of the clock. This is ensured in hardware by the TWI module.

Figure 26-5. Data Validity

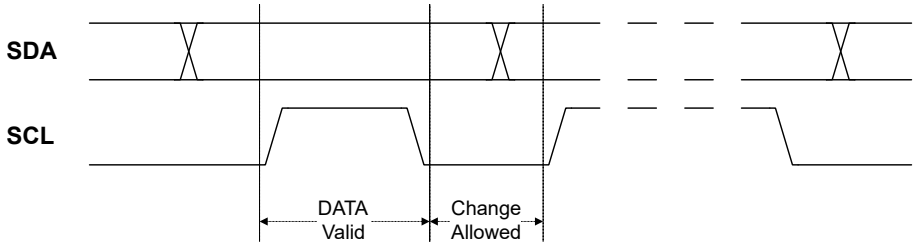

Combining bit transfers results in the formation of address and data packets. These packets consist of eight data bits (one byte) with the most-significant bit transferred first, plus a single-bit not-acknowledge (NACK) or acknowledge (ACK) response. The addressed device signals ACK by pulling the SCL line low during the ninth clock cycle, and signals NACK by leaving the line SCL high.

26.3.2.3 Address Packet

After the START condition, a 7-bit address followed by a read/write (R/$\overline{W}$) bit is sent. This is always transmitted by the master. A slave recognizing its address will ACK the address by pulling the data line low for the next SCL cycle, while all other slaves should keep the TWI lines released and wait for the next START and address. The address, R/$\overline{W}$ bit, and acknowledge bit combined is the address packet. Only one address packet for each START condition is allowed, also when 10-bit addressing is used.

The R/$\overline{W}$ bit specifies the direction of the transaction. If the R/$\overline{W}$ bit is low, it indicates a master write transaction, and the master will transmit its data after the slave has acknowledged its address. If the R/$\overline{W}$ bit is high, it indicates a master read transaction, and the slave will transmit its data after acknowledging its address.

26.3.2.4 Data Packet

An address packet is followed by one or more data packets. All data packets are nine bits long, consisting of one data byte and an acknowledge bit. The direction bit in the previous address packet determines the direction in which the data are transferred.

26.3.2.5 Transaction

A transaction is the complete transfer from a START to a STOP condition, including any repeated START conditions in between. The TWI standard defines three fundamental transaction modes: Master write, master read, and a combined transaction.

Figure 26-6 illustrates the master write transaction. The master initiates the transaction by issuing a START condition (S) followed by an address packet with the direction bit set to zero (ADDRESS+$\overline{W}$).

Figure 26-6. Master Write Transaction

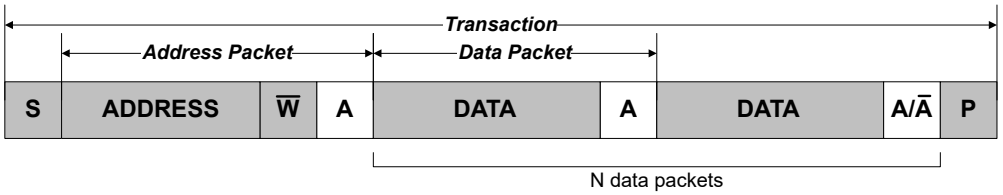

Assuming the slave acknowledges the address, the master can start transmitting data (DATA) and the slave will ACK or NACK (A/$\overline{A}$) each byte. If no data packets are to be transmitted, the master terminates the transaction by issuing a STOP condition (P) directly after the address packet. There are no limitations to the number of data packets that can be transferred. If the slave signals a NACK to the data, the master must assume that the slave cannot receive any more data and terminate the transaction.

Figure 26-7 illustrates the master read transaction. The master initiates the transaction by issuing a START condition followed by an address packet with the direction bit set to one (ADDRESS+R). The addressed slave must acknowledge the address for the master to be allowed to continue the transaction.

Figure 26-7. Master Read Transaction

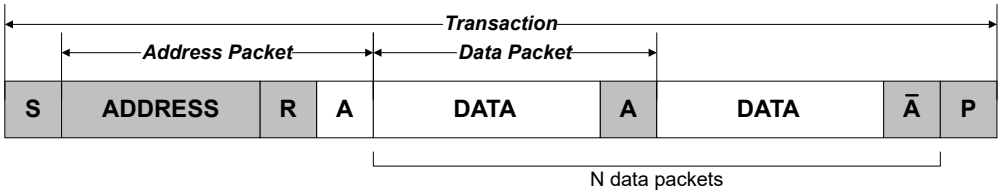

Assuming the slave acknowledges the address, the master can start receiving data from the slave. There are no limitations to the number of data packets that can be transferred. The slave transmits the data while the master signals ACK or NACK after each data byte. The master terminates the transfer with a NACK before issuing a STOP condition.

Figure 26-8 illustrates a combined transaction. A combined transaction consists of several read and write transactions separated by repeated START conditions (Sr).

Figure 26-8. Combined Transaction

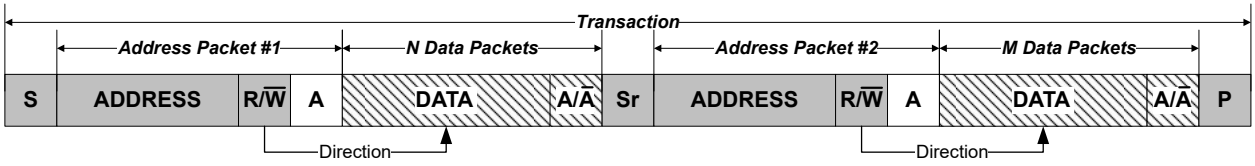

26.3.2.6 Clock and Clock Stretching

All devices connected to the bus are allowed to stretch the low period of the clock to slow down the overall clock frequency or to insert wait states while processing data. A device that needs to stretch the clock can do this by holding/forcing the SCL line low after it detects a low level on the line.

Three types of clock stretching can be defined, as shown in Figure 26-9.

Figure 26-9. Clock Stretching (1)

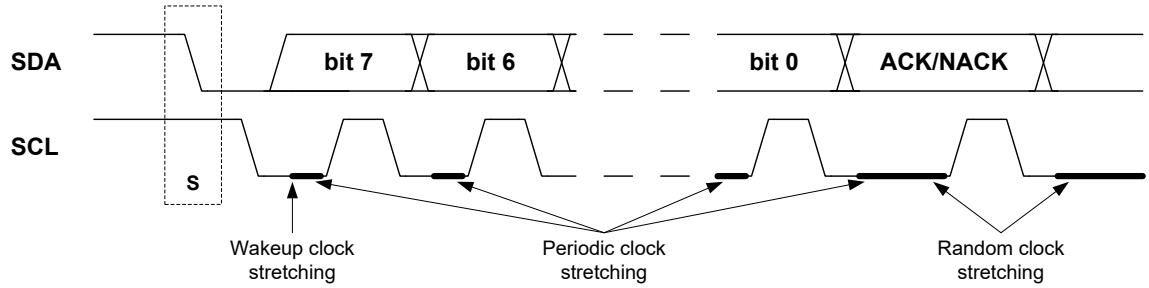

Note: Clock stretching is not supported by all I^2C slaves and masters.

If a slave device is in sleep mode and a START condition is detected, the clock stretching normally works during the wake-up period. For AVR devices, the clock stretching will be either directly before or after the ACK/NACK bit, as AVR devices do not need to wake up for transactions that are not addressed to it.

A slave device can slow down the bus frequency by stretching the clock periodically on a bit level. This allows the slave to run at a lower system clock frequency. However, the overall performance of the bus will be reduced accordingly. Both the master and slave device can randomly stretch the clock on a byte level basis before and after the ACK/NACK bit. This provides time to process incoming or prepare outgoing data, or perform other time-critical tasks.

In the case where the slave is stretching the clock, the master will be forced into a wait state until the slave is ready, and vice versa.

26.3.2.7 Arbitration

A master can start a bus transaction only if it has detected that the bus is idle. As the TWI bus is a multi-master bus, it is possible that two devices may initiate a transaction at the same time. This results in multiple masters owning the bus simultaneously. This is solved using an arbitration scheme where the master loses control of the bus if it is not able to transmit a high level on the SDA line. The masters who lose arbitration must then wait until the bus becomes idle (i.e., wait for a STOP condition) before attempting to reacquire bus ownership. Slave devices are not involved in the arbitration procedure.

Figure 26-10. TWI Arbitration

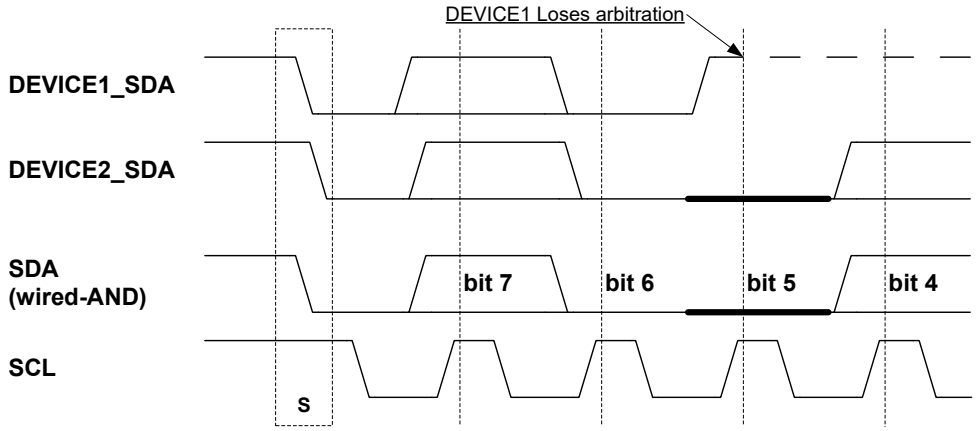

Figure 26-10 shows an example where two TWI masters are contending for bus ownership. Both devices are able to issue a START condition, but DEVICE1 loses arbitration when attempting to transmit a high level (bit 5) while DEVICE2 is transmitting a low level.

Arbitration between a repeated START condition and a data bit, a STOP condition and a data bit, or a repeated START condition and a STOP condition are not allowed and will require special handling by software.

26.3.2.8 Synchronization

A clock synchronization algorithm is necessary for solving situations where more than one master is trying to control the SCL line at the same time. The algorithm is based on the same principles used for the clock stretching previously described. Figure 26-11shows an example where two masters are competing for control over the bus clock. The SCL line is the wired-AND result of the two masters clock outputs.

Figure 26-11. Clock Synchronization

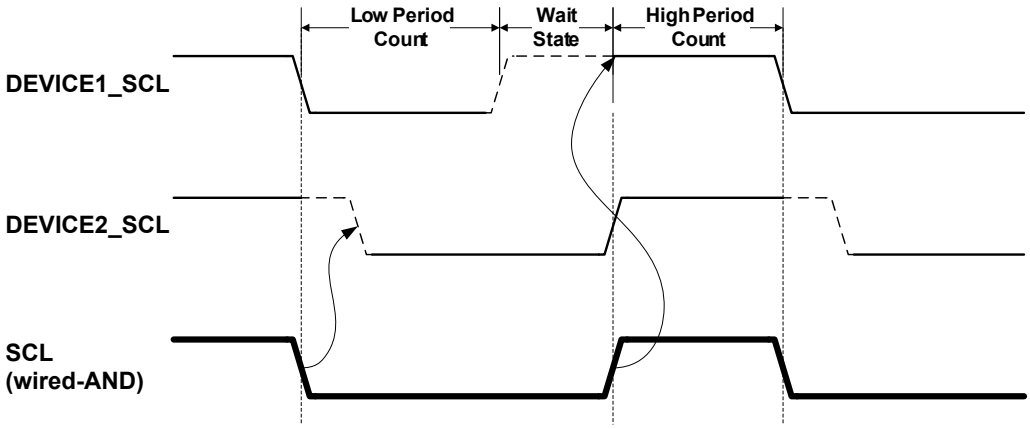

A high-to-low transition on the SCL line will force the line low for all masters on the bus, and they will start timing their low clock period. The timing length of the low clock period can vary among the masters. When a master (DEVICE1 in this case) has completed its low period, it releases the SCL line. However, the SCL line will not go high until all masters have released it. Consequently, the SCL line will be held low by the device with the longest low period (DEVICE2). Devices with shorter low periods must insert a wait state until the clock is released. All masters start their high period when the SCL line is released by all devices and has gone high. The device which first completes its high period (DEVICE1) forces the clock line low, and the procedure is then repeated. The result is that the device with the shortest clock period determines the high period, while the low period of the clock is determined by the device with the longest clock period.

26.3.3 TWI Bus State Logic

The bus state logic continuously monitors the activity on the TWI bus lines when the master is enabled. It continues to operate in all sleep modes, including power-down.

The bus state logic includes START and STOP condition detectors, collision detection, inactive bus timeout detection, and a bit counter. These are used to determine the bus state. Software can get the current bus state by reading the bus state bits in the master status register. The bus state can be unknown, idle, busy, or owner, and is determined according to the state diagram shown in Figure 26-12. The values of the bus state bits according to state are shown in binary in the figure.

Figure 26-12. Bus State, State Diagram

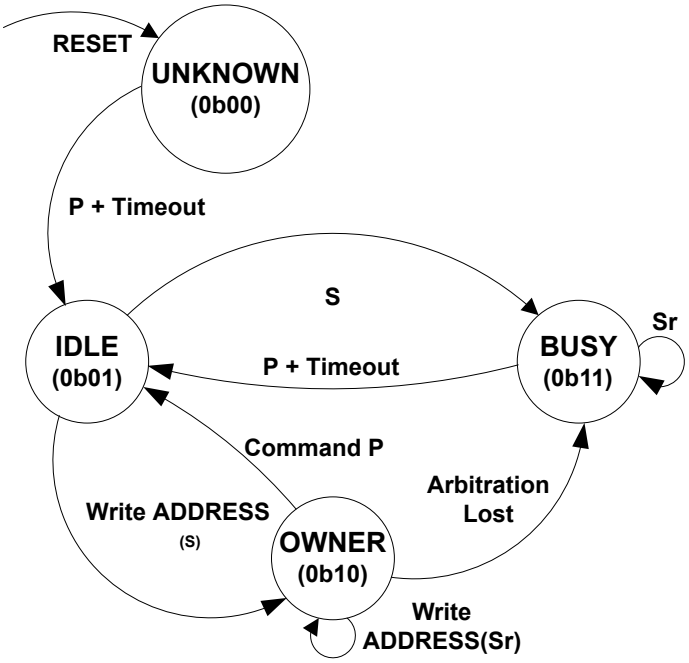

After a system reset and/or TWI master enable, the bus state is unknown. The bus state machine can be forced to enter idle by writing to the bus state bits accordingly. If no state is set by the application software, the bus state will become idle when the first STOP condition is detected. If the master inactive bus timeout is enabled, the bus state will change to idle on the occurrence of a timeout. After a known bus state is established, only a system reset or disabling of the TWI master will set the state to unknown.

When the bus is idle, it is ready for a new transaction. If a START condition generated externally is detected, the bus becomes busy until a STOP condition is detected. The STOP condition will change the bus state to idle. If the master inactive bus timeout is enabled, the bus state will change from busy to idle on the occurrence of a timeout.

If a START condition is generated internally while in idle state, the owner state is entered. If the complete transaction was performed without interference, i.e., no collisions are detected, the master will issue a STOP condition and the bus state will change back to idle. If a collision is detected, the arbitration is assumed lost and the bus state becomes busy until a STOP condition is detected. A repeated START condition will only change the bus state if arbitration is lost during the issuing of the repeated START. Arbitration during repeated START can be lost only if the arbitration has been ongoing since the first START condition. This happens if two masters send the exact same ADDRESS +DATA before one of the masters issues a repeated START (Sr).

26.3.4 Operation

26.3.4.1 Electrical Characteristics

The TWI module in AVR devices follows the electrical specifications and timing of I^2C bus and SMBus. These specifications are not 100% compliant, and so to ensure correct behavior, the inactive bus timeout period should be set in TWI master mode. Refer to 26.3.4.2 TWI Master Operation for more details.

26.3.4.2 TWI Master Operation

The TWI master is byte-oriented, with an optional interrupt after each byte. There are separate interrupt flags for master write and master read. Interrupt flags can also be used for polled operation. There are dedicated status flags for indicating ACK/NACK received, bus error, arbitration lost, clock hold, and bus state.

When an interrupt flag is set, the SCL line is forced low. This will give the master time to respond or handle any data, and will in most cases require software interaction. Figure 26-13 shows the TWI master operation. The diamond shaped symbols (SW) indicate where software interaction is required. Clearing the interrupt flags releases the SCL line.

Figure 26-13. TWI Master Operation

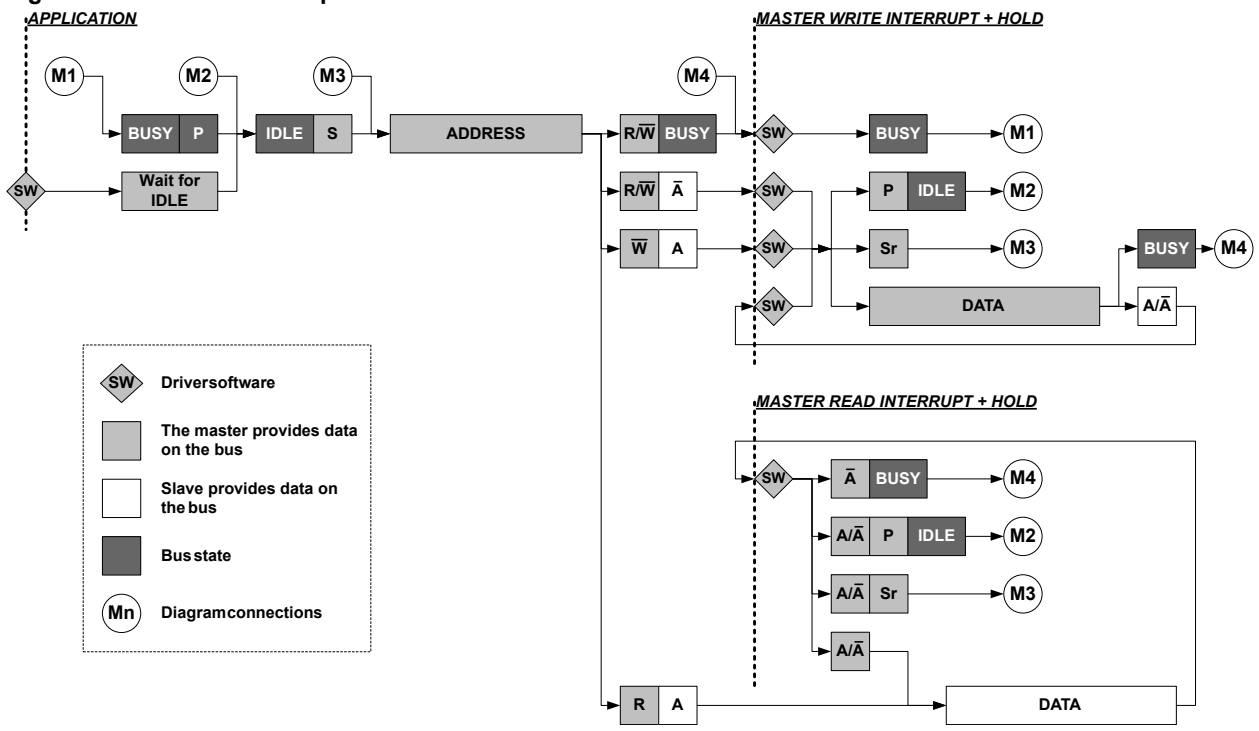

The number of interrupts generated is kept to a minimum by automatic handling of most conditions.

26.3.4.2.1 Clock Generation

The BAUD must be set to a value that results in a TWI bus clock frequency (f_{SCL}) equal or less than 100kHz/400kHz/ 1MHz, dependent on the mode used by the application (Standard mode Sm/Fast mode Fm/Fast mode plus Fm+).

The low (T_{LOW}) and high (T_{HIGH}) times are determined by the Baud Rate register (BAUD), while the rise (T_{RISE}) and fall (T_{FALL}) times are determined by the bus topology. Because of the wired-AND logic of the bus, T_{FALL} will be considered as part of T_{LOW}. Likewise, T_{RISE} will be in a state between T_{LOW} and T_{HIGH} until a high state has been detected.

Figure 26-14. SCL Timing

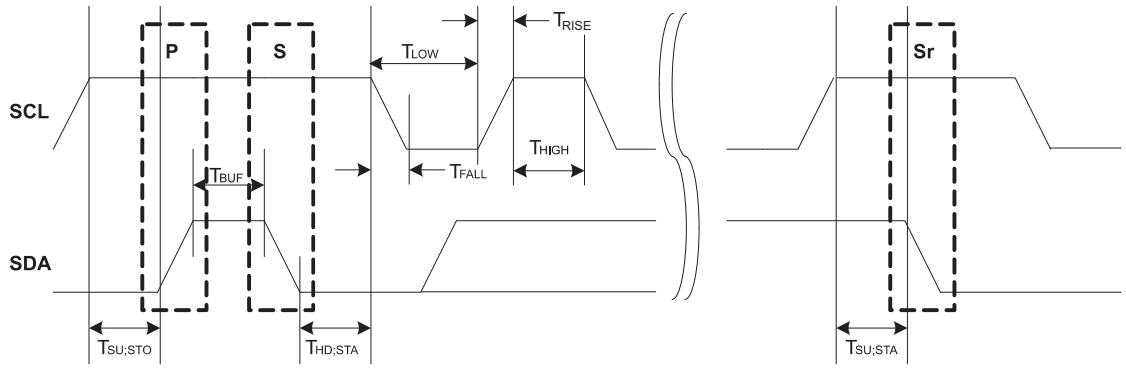

- T_{LOW} – Low period of SCL clock
- $T_{SU;STO}$ – Set-up time for stop condition
- T_{BUF} – Bus free time between stop and start conditions
- $T_{HD;STA}$ – Hold time (repeated) start condition
- $T_{SU;STA}$ – Set-up time for repeated start condition

- T_{HIGH} is timed using the SCL high time count from TWI.MBAUD
- T_{RISE} is determined by the bus impedance; for internal pull-ups. Refer to *Electrical Characteristics*.
- T_{FALL} is determined by the open-drain current limit and bus impedance; can typically be regarded as zero. Refer to *Electrical Characteristics* for details.

The SCL frequency is given by:

$$f_{\mathrm{SCL}} = \frac{1}{T_{\mathrm{LOW}} + T_{\mathrm{HIGH}} + T_{\mathrm{RISE}}}$$

The TWI.MBAUD value is used to time both SCL high and SCL low which gives the following formula of SCL frequency:

$$f_{\mathrm{SCL}} = \frac{f_{\mathrm{CLK_PER}}}{10 + 2BAUD + f_{\mathrm{CLK_PER}} \cdot T_{\mathrm{RISE}}}$$

If the TWI is in Fm+ mode, only TWI.MBAUD value of 3 or higher is supported. This means that for Fm+ mode to achieve baud rate of 1MHz, the peripheral clock (CLK_PER) has to run at 16MHz or faster.

26.3.4.2.2 Transmitting Address Packets

After issuing a START condition, the master starts performing a bus transaction when the master address register is written with the 7-bit slave address and direction bit. If the bus is busy, the TWI master will wait until the bus becomes idle before issuing the START condition.

Depending on arbitration and the R/$\overline{W}$ direction bit, one of four distinct cases (M1 to M4) arises following the address packet. The different cases must be handled in software.

Case M1: Arbitration Lost or Bus Error during Address Packet
If arbitration is lost during the sending of the address packet, the Master Write Interrupt Flag (WIF in TWI.MSTATUS) and Arbitration Lost Flag (ARBLOST in TWI.MSTATUS) are both set. Serial data output to the SDA line is disabled, and the SCL line is released. The master is no longer allowed to perform any operation on the bus until the bus state has changed back to idle.

A bus error will behave in the same way as an arbitration lost condition, but the Bus Error Flag (BUSERR in TWI.MSTATUS) is set in addition to the write interrupt and arbitration lost flags.

Case M2: Address Packet Transmit Complete - Address not Acknowledged by Slave
If no slave device responds to the address, the Master Write Interrupt Flag (WIF in TWI.MSTATUS) and the Master Received Acknowledge Flag (RXACK in TWI.MSTATUS) are set. The RXACK flag reflects the physical state of the ACK bit, i.e. no slave did pull the ACK bit low. The clock hold is active at this point, preventing further activity on the bus.

Case M3: Address Packet Transmit Complete - Direction Bit Cleared
If the master receives an ACK from the slave, the Master Write Interrupt Flag (WIF in TWI.MSTATUS) is set and the Master Received Acknowledge Flag (RXACK in TWI_MSTATUS) is cleared. The clock hold is active at this point, preventing further activity on the bus.

Case M4: Address Packet Transmit Complete - Direction Bit Set
If the master receives an ACK from the slave, the master proceeds to receive the next byte of data from the slave. When the first data byte is received, the Master Read Interrupt Flag (RIF in TWI.MSTATUS) is set and the Master Received Acknowledge Flag (RXACK in TWI.MSTATUS) is cleared. The clock hold is active at this point, preventing further activity on the bus.

26.3.4.2.3 Transmitting Data Packets

The slave will know when an address packet with R/$\overline{W}$ direction bit set has been successfully received. It can then start sending data by writing to the slave data register. When a data packet transmission is completed, the data interrupt flag is set. If the master indicates NACK, the slave must stop transmitting data and expect a STOP or repeated START condition.

26.3.4.2.4 Receiving Data Packets

The slave will know when an address packet with R/$\overline{W}$ direction bit cleared has been successfully received. After acknowledging this, the slave must be ready to receive data. When a data packet is received, the data interrupt flag is set and the slave must indicate ACK or NACK. After indicating a NACK, the slave must expect a STOP or repeated START condition.

26.3.4.2.5 Quick Command Mode

With Quick Command enabled (QCEN in 26.5.3 MCTRLA), the R/W# bit of the slave address denotes the command. This is a SMBus specific command where the R/W# bit may be used to simply turn a device function on or off, or enable/disable a low power standby mode. There is no data sent or received.

After the master receives an acknowledge from the slave, either RIF or WIF flag in 26.5.5 MSTATUS will be set depending on polarity of R/W#. When either RIF or WIF flag is set after issuing a Quick Command, the TWI will accept a stop command through writing the CMD bits in 26.5.4 MCTRLB.

Figure 26-15. Quick Command Frame Format

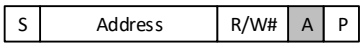

26.3.4.3 TWI Slave Operation

The TWI slave is byte-oriented with optional interrupts after each byte. There are separate slave data and address/stop interrupt flags. Interrupt flags can also be used for polled operation. There are dedicated status flags for indicating ACK/NACK received, clock hold, collision, bus error, and read/write direction.

When an interrupt flag is set, the SCL line is forced low. This will give the slave time to respond or handle data, and will in most cases require software interaction. Figure 26-16. shows the TWI slave operation. The diamond shapes symbols (SW) indicate where software interaction is required.

Figure 26-16. TWI Slave Operation

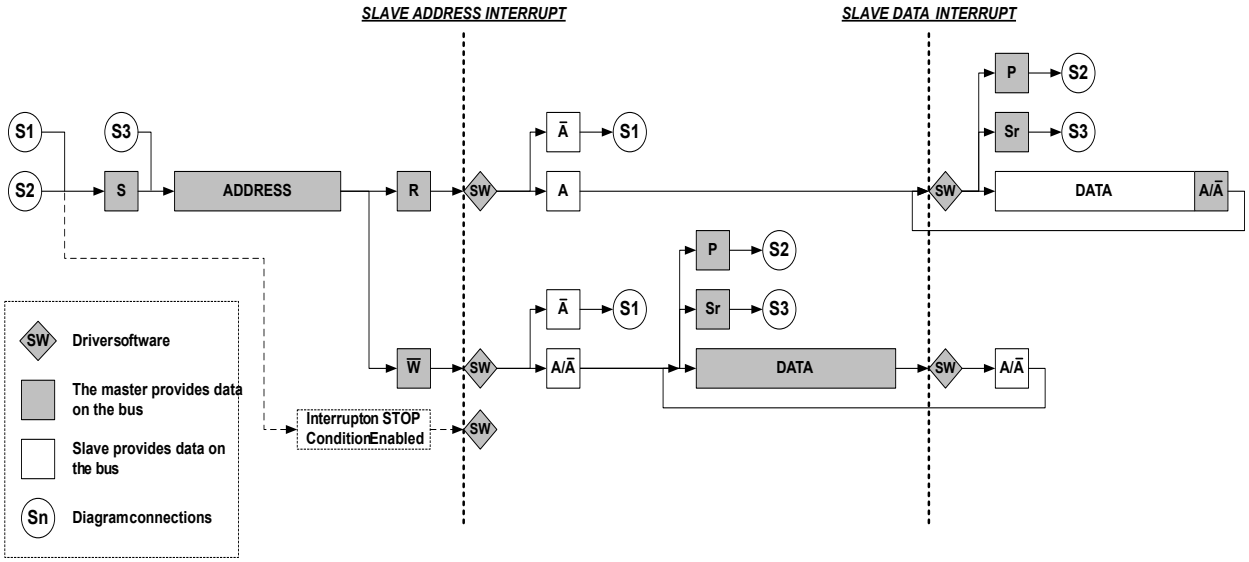

The number of interrupts generated is kept to a minimum by automatic handling of most conditions. Quick command can be enabled to auto-trigger operations and reduce software complexity.

Address Recognition Mode can be enabled to allow the slave to respond to all received addresses.

26.3.4.3.1 Receiving Address Packets

When the TWI slave is properly configured, it will wait for a START condition to be detected. When this happens, the successive address byte will be received and checked by the address match logic, and the slave will ACK a correct address and store the address in the DATA register. If the received address is not a match, the slave will not acknowledge and store address, and will wait for a new START condition.

The slave address/stop interrupt flag is set when a START condition succeeded by a valid address byte is detected. A general call address will also set the interrupt flag.

A START condition immediately followed by a STOP condition is an illegal operation, and the bus error flag is set.

The R/$\overline{W}$ direction flag reflects the direction bit received with the address. This can be read by software to determine the type of operation currently in progress.

Depending on the R/$\overline{W}$ direction bit and bus condition, one of four distinct cases (S1 to S4) arises following the address packet. The different cases must be handled in software.

Case S1: Address Packet Accepted - Direction Bit Set
If the R/$\overline{W}$ direction flag is set, this indicates a master read operation. The SCL line is forced low by the slave, stretching the bus clock. If ACK is sent by the slave, the slave hardware will set the data interrupt flag indicating data is needed for transmit. Data, repeated START, or STOP can be received after this. If NACK is sent by the slave, the slave will wait for a new START condition and address match.

Case S2: Address Packet Accepted - Direction Bit Cleared
If the R/$\overline{W}$ direction flag is cleared, this indicates a master write operation. The SCL line is forced low, stretching the bus clock. If ACK is sent by the slave, the slave will wait for data to be received. Data, repeated START, or STOP can be received after this. If NACK is sent, the slave will wait for a new START condition and address match.

Case S3: Collision
If the slave is not able to send a high level or NACK, the collision flag is set, and it will disable the data and acknowledge output from the slave logic. The clock hold is released. A START or repeated START condition will be accepted.

Case S4: STOP Condition Received
When the STOP condition is received, the slave address/stop flag will be set, indicating that a STOP condition, and not an address match, occurred.

26.3.4.3.2 Receiving Data Packets
The slave will know when an address packet with R/$\overline{W}$ direction bit cleared has been successfully received. After acknowledging this, the slave must be ready to receive data. When a data packet is received, the data interrupt flag is set and the slave must indicate ACK or NACK. After indicating a NACK, the slave must expect a STOP or repeated START condition.

26.3.4.3.3 Transmitting Data Packets
The slave will know when an address packet with R/$\overline{W}$ direction bit set has been successfully received. It can then start sending data by writing to the slave data register. When a data packet transmission is completed, the data interrupt flag is set. If the master indicates NACK, the slave must stop transmitting data and expect a STOP or repeated START condition.

26.3.4.4 Smart Mode
The TWI interface has a smart mode that simplifies application code and minimizes the user interaction needed to adhere to the I^2C protocol. For TWI Master, smart mode accomplishes this by automatically sending an ACK as soon as data register TWI.MDATA is read. This feature is only active when the ACKACT bit in TWI.MCTRLA register is set to ACK. If ACKACT is set to NACK, the TWI Master will not generate a NACK bit followed by reading the data register.

With smart mode enabled for TWI Slave (SMEN bit in TWI.SCTRLA), DIF (Data Interrupt Flag) will automatically be cleared if data register (TWI.SDATA) is read or written.

26.3.5 Events
Not applicable.

26.3.6 Interrupts
Table 26-2. Available Interrupt Vectors and Sources

Offset	Name	Vector Description	Conditions
0x00	Slave	TWI Slave interrupt	• DIF: Data Interrupt Flag in 26.5.11 SSTATUS set • APIF: Address or Stop Interrupt Flag in 26.5.11 SSTATUS set
0x02	Master	TWI Master interrupt	• RIF: Read Interrupt Flag in 26.5.5 MSTATUS set • WIF: Write Interrupt Flag in 26.5.5 MSTATUS set

When an interrupt condition occurs, the corresponding Interrupt Flag is set in the Master register (TWI.MSTATUS) or Slave Status register (TWI.SSTATUS).
When several interrupt request conditions are supported by an interrupt vector, the interrupt requests are ORed together into one combined interrupt request to the Interrupt Controller. The user must read the peripheral's INTFLAGS register to determine which of the interrupt conditions are present.

Related Links

13. CPUINT - CPU Interrupt Controller
8.7.3 SREG

26.3.7 Sleep Mode Operation

The bus state logic and Slave continue to operate in all sleep modes, including Power Down sleep mode. If a Slave device is in sleep mode and a START condition is detected, clock stretching is active during the wake-up period until the system clock is available. Master will stop operation in all sleep modes.

26.3.8 Synchronization

Not applicable.

26.3.9 Configuration Change Protection

Not applicable.

26.4 Register Summary - TWI

Offset	Name	Bit Pos.								
0x00	CTRLA	7:0				SDASETUP	SDAHOLD[1:0]		FMPEN	
0x01	Reserved									
0x02	DBGCTRL	7:0								DBGRUN
0x03	MCTRLA	7:0	RIEN	WIEN		QCEN	TIMEOUT[1:0]		SMEN	ENABLE
0x04	MCTRLB	7:0					FLUSH	ACKACT	CMD[1:0]	
0x05	MSTATUS	7:0	RIF	WIF	CLKHOLD	RXACK	ARBLOST	BUSERR	BUSSTATE[1:0]	
0x06	MBAUD	7:0	BAUD[7:0]							
0x07	MADDR	7:0	ADDR[7:0]							
0x08	MDATA	7:0	DATA[7:0]							
0x09	SCTRLA	7:0	DIEN	APIEN	PIEN			PMEN	SMEN	ENABLE
0x0A	SCTRLB	7:0						ACKACT	CMD[1:0]	
0x0B	SSTATUS	7:0	DIF	APIF	CLKHOLD	RXACK	COLL	BUSERR	DIR	AP
0x0C	SADDR	7:0	ADDR[7:0]							
0x0D	SDATA	7:0	DATA[7:0]							
0x0E	SADDRMASK	7:0	ADDRMASK[6:0]							ADDREN

26.5 Register Description

26.5.1 Control A

Name: CTRLA
Offset: 0x00
Reset: 0x00
Property: -

Bit	7	6	5	4	3	2	1	0
				SDASETUP	SDAHOLD[1:0]		FMPEN	
Access				R/W	R/W	R/W	R/W	
Reset				0	0	0	0	

Bit 4 – SDASETUP SDA Setup Time
By default, there are 4 clock cycles of setup time on SDA out signal while reading from slave part of the TWI module. Writing this bit to '1' will change the setup time to 8 clocks.

Value	Name	Description
0	4CYC	SDA setup time is 4 clock cycles
1	8CYC	SDA setup time is 8 clock cycle

Bits 3:2 – SDAHOLD[1:0] SDA Hold Time
Writing these bits selects the SDA hold time.

Table 26-3. SDA Hold Time

SDAHOLD[1:0]	Nominal Hold Time	Hold Time Range across All Corners (ns)	Description
0x0	OFF	0	Hold time off.
0x1	50ns	36 - 131	Backward compatible setting.
0x2	300ns	180 - 630	Meets SMBus specification under typical conditions.
0x3	500ns	300 - 1050	Meets SMBus specification across all corners.

Bit 1 – FMPEN FM Plus Enable
Writing these bits selects the 1MHz bus speed (Fast mode plus, Fm+) for the TWI in default configuration.

Value	Description
0	Fm+ disabled
1	Fm+ enabled

26.5.2 Debug Control

Name: DBGCTRL
Offset: 0x02
Reset: 0x00
Property: -

Bit	7	6	5	4	3	2	1	0
								DBGRUN
Access								R/W
Reset								0

Bit 0 – DBGRUN Debug Run

Value	Description
0	The peripheral is halted in break debug mode and ignores events.
1	The peripheral will continue to run in break debug mode when the CPU is halted.

26.5.3 Master Control A

Name: MCTRLA
Offset: 0x03
Reset: 0x00
Property: -

Bit	7	6	5	4	3	2	1	0
	RIEN	WIEN		QCEN	TIMEOUT[1:0]		SMEN	ENABLE
Access	R/W	R/W		R/W	R/W	R/W	R/W	R/W
Reset	0	0		0	0	0	0	0

Bit 7 – RIEN Read Interrupt Enable
Writing this bit to '1' enables interrupt on the Master Read Interrupt Flag (RIF) in the Master Status register (TWI.MSTATUS). A TWI Master read interrupt would be generated only if this bit, the RIF, and the Global Interrupt Flag (I) in CPU.SREG are all '1'.

Bit 6 – WIEN Write Interrupt Enable
Writing this bit to '1' enables interrupt on the Master Write Interrupt Flag (WIF) in the Master Status register (TWI.MSTATUS). A TWI Master write interrupt will be generated only if this bit, the WIF, and the Global Interrupt Flag (I) in CPU.SREG are all '1'.

Bit 4 – QCEN Quick Command Enable
Writing this bit to '1' enables Quick Command. When Quick Command is enabled, the corresponding interrupt flag is set immediately after the slave acknowledges the address. At this point the software can either issue a Stop command or a repeated Start by writing either the Command bits (CMD) in the Master Control B register (TWI.MCTRLB) or the Master Address register (TWI.MADDR).

Bits 3:2 – TIMEOUT[1:0] Inactive Bus Timeout

Value	Name	Description
0x0	DISABLED	Bus timeout disabled. I^2C.
0x1	50US	50µs - SMBus (assume baud is set to 100kHz)
0x2	100US	100µs (assume baud is set to 100kHz)
0x3	200US	200µs (assume baud is set to 100kHz)

Bit 1 – SMEN Smart Mode Enable
Writing this bit to '1' enables the Master smart mode. When smart mode is enabled, the acknowledge action is sent immediately after reading the Master Data (TWI.MDATA) register.

Bit 0 – ENABLE Enable TWI Master
Writing this bit to '1' enables the TWI as Master.

26.5.4 Master Control B

Name: MCTRLB
Offset: 0x04
Reset: 0x00
Property: -

Bit	7	6	5	4	3	2	1	0
					FLUSH	ACKACT	CMD[1:0]	
Access					R/W	R/W	R/W	R/W
Reset					0	0	0	0

Bit 3 – FLUSH Flush
Writing a '1' to this bit generates a strobe for one clock cycle disabling and then enabling the master.
Writing '0' has no effect.
The purpose is to clear the internal state of master: For TWI master to transmit successfully, it is recommended to write the Master Address register (TWI.MADDR) first and then the Master Data register (TWI.MDATA).
The peripheral will transmit invalid data if TWI.MDATA is written before TWI.MADDR. To avoid this invalid transmission, write '1' to this bit to clear both registers.

Bit 2 – ACKACT Acknowledge Action
This bit defines the master's behavior under certain conditions defined by the bus protocol state and software interaction. The acknowledge action is performed when DATA is read, or when an execute command is written to the CMD bits.
The ACKACT bit is not a flag or strobe, but an ordinary read/write accessible register bit. The default ACKACT for master read interrupt is "Send ACK" (0). For master write, the code will know that no acknowledge should be sent since it is itself sending data.

Value	Description
0	Send ACK
1	Send NACK

Bits 1:0 – CMD[1:0] Command
The master command bits are strobes. These bits are always read as zero.
Writing to these bits triggers a master operation as defined by the table below.

Table 26-4. Command Settings

CMD[1:0]	DIR	Description
0x0	X	NOACT
0x1	X	REPSTART - Execute Acknowledge Action succeeded by repeated Start.
0x2	0	RECVTRANS - Execute Acknowledge Action succeeded by a byte read operation.
	1	Execute Acknowledge Action (no action) succeeded by a byte send operation.(1)
0x3	X	STOP - Execute Acknowledge Action succeeded by issuing a STOP condition.

Note:
1. For a master being a sender, it will normally wait for new data written to the Master Data Register (TWI.MDATA).

The acknowledge action bits and command bits can be written at the same time.

26.5.5 Master Status

Name: MSTATUS
Offset: 0x05
Reset: 0x00
Property: -

Normal TWI operation dictates that this register is regarded purely as a read-only register. Clearing any of the status flags is done indirectly by accessing the Master transmits address (TWI.MADDR), Master Data register (TWI.MDATA), or the Command bits (CMD) in the Master Control B register (TWI.MCTRLB).

Bit	7	6	5	4	3	2	1	0
	RIF	WIF	CLKHOLD	RXACK	ARBLOST	BUSERR	BUSSTATE[1:0]	
Access	R/W	R/W	R/W	R	R/W	R/W	R/W	R/W
Reset	0	0	0	0	0	0	0	0

Bit 7 – RIF Read Interrupt Flag
This bit is set to '1' when the master byte read operation is successfully completed, i.e. no arbitration lost or bus error occurred during the operation. The read operation is triggered by software reading DATA or writing to ADDR registers with bit ADDR[0] written to '1'. A slave device must have responded with an ACK to the address and direction byte transmitted by the master for this flag to be set.
Writing a '1' to this bit will clear the RIF. However, normal use of the TWI does not require the flag to be cleared by this method.
Clearing the RIF bit will follow the same software interaction as the CLKHOLD flag.
The RIF flag can generate a master read interrupt (see description of the RIEN control bit in the TWI.MCTRLA register).

Bit 6 – WIF Write Interrupt Flag
This bit is set when a master transmit address or byte write is completed, regardless of the occurrence of a bus error or an arbitration lost condition.
Writing a '1' to this bit will clear the WIF. However, normal use of the TWI does not require the flag to be cleared by this method.
Clearing the WIF bit will follow the same software interaction as the CLKHOLD flag.
The WIF flag can generate a master write interrupt (see description of the WIEN control bit in the TWI.MCTRLA register).

Bit 5 – CLKHOLD Clock Hold
If read as '1', this bit indicates that the master is currently holding the TWI clock (SCL) low, stretching the TWI clock period.
Writing a '1' to this bit will clear the CLKHOLD flag. However, normal use of the TWI does not require the CLKHOLD flag to be cleared by this method, since the flag is automatically cleared when accessing several other TWI registers.
The CLKHOLD flag can be cleared by:

1. Writing a '1' to it.
2. Writing to the TWI.MADDR register.
3. Writing to the TWI.MDATA register.
4. Reading the TWI.DATA register while the ACKACT control bits in TWI.MCTRLB are set to either send ACK or NACK.
5. Writing a valid command to the TWI.MCTRLB register.

Bit 4 – RXACK Received Acknowledge
This bit is read-only and contains to the most recently received acknowledge bit from slave.

Bit 3 – ARBLOST Arbitration Lost
If read as '1' this bit indicates that the master has lost arbitration while transmitting a high data or NACK bit, or while issuing a start or repeated start condition (S/Sr) on the bus.

Writing a '1' to it will clear the ARBLOST flag. However, normal use of the TWI does not require the flag to be cleared by this method. However, as for the CLKHOLD flag, clearing the ARBLOST flag is not required during normal use of the TWI.
Clearing the ARBLOST bit will follow the same software interaction as the CLKHOLD flag.
Given the condition where the bus ownership is lost to another master, the software must either abort operation or resend the data packet. Either way, the next required software interaction is in both cases to write to the TWI.MADDR register. A write access to the TWI.MADDR register will then clear the ARBLOST flag.

Bit 2 – BUSERR Bus Error
The BUSERR flag indicates that an illegal bus condition has occurred. An illegal bus condition is detected if a protocol violating start (S), repeated start (Sr), or stop (P) is detected on the TWI bus lines. A start condition directly followed by a stop condition is one example of protocol violation.
Writing a '1' to this bit will clear the BUSERR. However, normal use of the TWI does not require the BUSERR to be cleared by this method.
A robust TWI driver software design will treat the bus error flag similarly to the ARBLOST flag, assuming the bus ownership is lost when the bus error flag is set. As for the ARBLOST flag, the next software operation of writing the TWI.MADDR register will consequently clear the BUSERR flag. For bus error to be detected, the bus state logic must be enabled and the system frequency must be 4x the SCL frequency.

Bits 1:0 – BUSSTATE[1:0] Bus State
These bits indicate the current TWI bus state as defined in the table below. After a System Reset or re-enabling, the TWI master bus state will be unknown. The change of bus state is dependent on bus activity.
Writing 0x1 to the BUSSTATE bits forces the bus state logic into its 'idle' state. However, the bus state logic cannot be forced into any other state. When the master is disabled, the bus-state is 'unknown'.

Value	Name	Description
0x0	UNKNOWN	Unknown bus state
0x1	IDLE	Bus is idle
0x2	OWNER	This TWI controls the bus
0x3	BUSY	The bus is busy

26.5.6 Master Baud Rate

Name: MBAUD
Offset: 0x06
Reset: 0x00
Property: -

Bit	7	6	5	4	3	2	1	0
	BAUD[7:0]							
Access	R/W	R/W	R/W	R/W	R/W	R/W	R/W	R/W
Reset	0	0	0	0	0	0	0	0

Bits 7:0 – BAUD[7:0] Baud Rate
This bit field is used to derive the SCL high and low time and should be written while the master is disabled (ENABLE bit in TWI.MCTRLA is '0').
For more information on how to calculate the frequency, see 26.3.4.2.1 Clock Generation.

26.5.7 Master Address

Name: MADDR
Offset: 0x07
Reset: 0x00
Property: -

Bit	7	6	5	4	3	2	1	0
	ADDR[7:0]							
Access	R/W	R/W	R/W	R/W	R/W	R/W	R/W	R/W
Reset	0	0	0	0	0	0	0	0

Bits 7:0 – ADDR[7:0] Address
When this bit field is written, a START condition and slave address protocol sequence is initiated dependent on the bus state.
If the bus state is unknown the Master Write Interrupt Flag (WIF) and bus error flag (BUSERR) in the Master Status register (TWI.MSTATUS) are set and the operation is terminated.
If the bus is busy the master awaits further operation until the bus becomes idle. When the bus is or becomes idle, the master generates a START condition on the bus, copies the ADDR value into the data shift register (TWI.MDATA) and performs a byte transmit operation by sending the contents of the data register onto the bus. The master then receives the response i.e. the acknowledge bit from the slave. After completing the operation the bus clock (SCL) is forced and held low only if arbitration was not lost. The CLKHOLD bit in the Master Setup register (TWI.MSETUP) is set accordingly. Completing the operation sets the WIF in the Master Status register (TWI.MSTATUS).
If the bus is already owned, a repeated start (Sr) sequence is performed. In two ways the repeated start (Sr) sequence deviates from the start sequence. Firstly, since the bus is already owned by the master, no wait for idle bus state is necessary. Secondly, if the previous transaction was a read, the acknowledge action is sent before the repeated start bus condition is issued on the bus.
The master receives one data byte from the slave before the master sets the Master Read Interrupt Flag (RIF) in the Master Status register (TWI.MSTATUS). All TWI Master flags are cleared automatically when this bit field is written. This includes bus error, arbitration lost, and both master interrupt flags.
This register can be read at any time without interfering with ongoing bus activity, since a read access does not trigger the master logic to perform any bus protocol related operations.
The master control logic uses bit 0 of the TWI.MADDR register as the bus protocol's read/write flag (R/$\overline{W}$).

26.5.8 Master DATA

Name: MDATA
Offset: 0x08
Reset: 0x00
Property: -

Bit	7	6	5	4	3	2	1	0
	DATA[7:0]							
Access	R/W	R/W	R/W	R/W	R/W	R/W	R/W	R/W
Reset	0	0	0	0	0	0	0	0

Bits 7:0 – DATA[7:0] Data
The bit field gives direct access to the masters physical shift register which is used both to shift data out onto the bus (write) and to shift in data received from the bus (read).
The direct access implies that the data register cannot be accessed during byte transmissions. Build-in logic prevents any write access to this register during the shift operations. Reading valid data or writing data to be transmitted can only be successfully done when the bus clock (SCL) is held low by the master, i.e. when the CLKHOLD bit in the Master Status register (TWI.MSTATUS) is set. However, it is not necessary to check the CLKHOLD bit in software before accessing this register if the software keeps track of the present protocol state by using interrupts or observing the interrupt flags.
Accessing this register assumes that the master clock hold is active, auto-triggers bus operations dependent of the state of the acknowledge action command bit (ACKACT) in TWI.MSTATUS and type of register access (read or write).
A write access to this register will, independent of ACKACT in TWI.MSTATUS, command the master to perform a byte transmit operation on the bus directly followed by receiving the acknowledge bit from the slave. When the acknowledge bit is received, the Master Write Interrupt Flag (WIF) in TWI.MSTATUS is set regardless of any bus errors or arbitration. If operating in a multi-master environment, the interrupt handler or application software must check the Arbitration Lost Status Flag (ARBLOST) in TWI.MSTATUS before continuing from this point. If the arbitration was lost, the application software must decide to either abort or to resend the packet by rewriting this register. The entire operation is performed (i.e. all bits are clocked), regardless of winning or losing arbitration before the write interrupt flag is set. When arbitration is lost, only '1's are transmitted for the remainder of the operation, followed by a write interrupt with ARBLOST flag set.
Both TWI master interrupt flags are cleared automatically when this register is written. However, the Master Arbitration Lost and Bus Error flags are left unchanged.
Reading this register triggers a bus operation, dependent on the setting of the acknowledge action command bit (ACKACT) in TWI.MSTATUS. Normally the ACKACT bit is preset to either ACK or NACK before the register read operation. If ACK or NACK action is selected, the transmission of the acknowledge bit precedes the release of the clock hold. The clock is released for one byte, allowing the slave to put one byte of data on the bus. The Master Read Interrupt flag RIF in TWI.MSTATUS is then set if the procedure was successfully executed. However, if arbitration was lost when sending NACK, or a bus error occurred during the time of operation, the Master Write Interrupt flag (WIF) is set instead. Observe that the two master interrupt flags are mutual exclusive, i.e. both flags will not be set simultaneously.
Both TWI master interrupt flags are cleared automatically if this register is read while ACKACT is set to either ACK or NACK. However, arbitration lost and bus error flags are left unchanged.

26.5.9 Slave Control A

Name: SCTRLA
Offset: 0x09
Reset: 0x00
Property: -

Bit	7	6	5	4	3	2	1	0
	DIEN	APIEN	PIEN			PMEN	SMEN	ENABLE
Access	R/W	R/W	R/W			R/W	R/W	R/W
Reset	0	0	0			0	0	0

Bit 7 – DIEN Data Interrupt Enable
Writing this bit to '1' enables interrupt on the Slave Data Interrupt Flag (DIF) in the Slave Status register (TWI.SSTATUS). A TWI slave data interrupt will be generated only if this bit, the DIF, and the Global Interrupt Flag (I) in CPU.SREG are all '1'.

Bit 6 – APIEN Address or Stop Interrupt Enable
Writing this bit to '1' enables interrupt on the Slave Address or Stop Interrupt Flag (APIF) in the Slave Status register (TWI.SSTATUS). A TWI slave address or stop interrupt will be generated only if the this bit, APIF, PIEN in this register, and the Global Interrupt Flag (I) in CPU.SREG are all '1'.
The slave stop interrupt shares the interrupt vector with slave address interrupt. The AP bit determines which caused the interrupt.

Bit 5 – PIEN Stop Interrupt Enable
Writing this bit to '1' enables APIF to be set when a STOP condition occurs. To use this feature the system frequency must be 4x the SCL frequency.

Bit 2 – PMEN Address Recognition Mode
If this bit is written to '1', the slave address match logic responds to all received addresses.
If this bit is written to '0', the address match logic uses the slave address register (TWI.SADDR) to determine which address to recognize as the slaves own address.

Bit 1 – SMEN Smart Mode Enable
Writing this bit to '1' enables the slave smart mode. When smart mode is enabled, issuing a command with CMD or reading/writing DATA resets the interrupt and operation continues. If smart mode is disabled, the slave always waits for a CMD command before continuing.

Bit 0 – ENABLE Enable TWI Slave
Writing this bit to '1' enables the TWI slave.

26.5.10 Slave Control B

Name: SCTRLB
Offset: 0x0A
Reset: 0x00
Property: -

Bit	7	6	5	4	3	2	1	0
						ACKACT	CMD[1:0]	
Access						R/W	R/W	R/W
Reset						0	0	0

Bit 2 – ACKACT Acknowledge Action
This bit defines the slave's behavior under certain conditions defined by the bus protocol state and software interaction. The table below lists the acknowledge procedure performed by the slave if action is initiated by software. The acknowledge action is performed when TWI.SDATA is read or written, or when an execute command is written to the CMD bits in this register.
The ACKACT bit is not a flag or strobe, but an ordinary read/write accessible register bit.

Value	Name	Description
0	ACK	Send ACK
1	NACK	Send NACK

Bits 1:0 – CMD[1:0] Command
Unlike the acknowledge action bits, the slave command bits are strobes. These bits always read as zero. Writing to these bits trigger a slave operation as defined in the table below.

Table 26-5. Command Settings

CMD[1:0]	DIR	Description
0x0 - NOACT	X	No action
0x1	X	Reserved
0x2 - COMPTRANS	Used to complete a transaction.	
	0	Execute Acknowledge Action succeeded by waiting for any START (S/Sr) condition.
	1	Wait for any START (S/Sr) condition.
0x3 - RESPONSE	Used in response to an address interrupt (APIF).	
	0	Execute Acknowledge Action succeeded by reception of next byte.
	1	Execute Acknowledge Action succeeded by slave data interrupt.
	Used in response to a data interrupt (DIF).	
	0	Execute Acknowledge Action succeeded by reception of next byte.
	1	Execute a byte read operation followed by Acknowledge Action.

The acknowledge action bits and command bits can be written at the same time.

26.5.11 Slave Status

Name: SSTATUS
Offset: 0x0B
Reset: 0x00
Property: -

Normal TWI operation dictates that the slave status register should be regarded purely as a read-only register. Clearing any of the status flags will indirectly be done when accessing the slave data (TWI.SDATA) register or the CMD bits in the Slave Control B register (TWI.SCTRLB).

Bit	7	6	5	4	3	2	1	0
	DIF	APIF	CLKHOLD	RXACK	COLL	BUSERR	DIR	AP
Access	R/W	R/W	R	R	R/W	R/W	R	R
Reset	0	0	0	0	0	0	0	0

Bit 7 – DIF Data Interrupt Flag
This flag is set when a slave byte transmit or byte receive operation is successfully completed without any bus error. The flag can be set with an unsuccessful transaction in case of collision detection (see description of the COLL status bit). Writing a '1' to its bit location will clear the DIF. However, normal use of the TWI does not require the DIF flag to be cleared by using this method, since the flag is automatically cleared when:

1. Writing to the slave DATA register.
2. Reading the slave DATA register.
3. Writing a valid command to the CTRLB register.

The DIF flag can be used to generate a slave data interrupt (see description of the DIEN control bit in TWI.CTRLA).

Bit 6 – APIF Address or Stop Interrupt Flag
This flag is set when the slave address match logic detects that a valid address has been received or by a stop condition. Writing a '1' to its bit location will clear the APIF. However, normal use of the TWI does not require the flag to be cleared by this method since the flag is cleared using same software interactions as described for the DIF flag. The APIF flag can be used to generate a slave address or stop interrupt (see description of the AIEN control bit in TWI.CTRLA). Take special note of that the slave stop interrupt shares the interrupt vector with slave address interrupt.

Bit 5 – CLKHOLD Clock Hold
If read as '1', the slave clock hold flag indicates that the slave is currently holding the TWI clock (SCL) low, stretching the TWI clock period. This is a read only bit that is set when an address or data interrupt is set. Resetting the corresponding interrupt will indirectly reset this flag.

Bit 4 – RXACK Received Acknowledge
This bit is read only and contains to the most recently received acknowledge bit from the master.

Bit 3 – COLL Collision
If read as '1', the transmit collision flag indicates that the slave has not been able to transmit a high data or NACK bit. If a slave transmit collision is detected, the slave will commence its operation as normal, except no low values will be shifted out onto the SDA line (i.e., when the COLL flag is set to '1' it disables the data and acknowledge output from the slave logic). DIF flag will be set to '1' at the end as a result of internal completion of unsuccessful transaction. Similarly when collision occurs because slave is not been able to transmit NACK bit, it means address match already happened and APIF flag is set as a result. APIF/DIF flags can only generate interrupt whose handlers can be used to check for the collision. Writing a '1' to its bit location will clear the COLL flag. However, the flag is automatically cleared if any START condition (S/Sr) is detected.
This flag is intended for systems where address resolution protocol (ARP) is employed. However, a detected collision in non-ARP situations indicates that there has been a protocol violation and should be treated as a bus error.

Bit 2 – BUSERR Bus Error
The BUSERR flag indicates that an illegal bus condition has occurred. An illegal bus condition is detected if a protocol violating start (S), repeated start (Sr), or stop (P) is detected on the TWI bus lines. A start condition directly followed by a stop condition is one example of protocol violation. Writing a '1' to its bit location will clear the BUSERR flag. However, normal use of the TWI does not require the BUSERR to be cleared by this method. A robust TWI driver software design will assume that the entire packet of data has been corrupted and restart by waiting for a new START condition (S). The TWI bus error detector is part of the TWI Master circuitry. For bus errors to be detected, the TWI Master must be enabled (ENABLE bit in TWI.MCTRLA is '1'), and the system clock frequency must be at least four times the SCL frequency.

Bit 1 – DIR Read/Write Direction
This bit is read only and indicates the current bus direction state. The DIR bit reflects the direction bit value from the last address packet received from a master TWI device. If this bit is read as '1', a master read operation is in progress. Consequently a '0' indicates that a master write operation is in progress.

Bit 0 – AP Address or Stop
When the TWI slave address or stop interrupt flag (APIF) is set, this bit determines whether the interrupt is due to address detection or a stop condition.

Value	Name	Description
0	STOP	A stop condition generated the interrupt on APIF.
1	ADR	Address detection generated the interrupt on APIF.

26.5.12 Slave Address

Name: SADDR
Offset: 0x0C
Reset: 0x00
Property: -

Bit	7	6	5	4	3	2	1	0
	ADDR[7:0]							
Access	R/W	R/W	R/W	R/W	R/W	R/W	R/W	R/W
Reset	0	0	0	0	0	0	0	0

Bits 7:0 – ADDR[7:0] Address
The slave address register in combination with the slave address mask register (TWI.SADDRMASK) is used by the slave address match logic to determine if a master TWI device has addressed the TWI slave. The slave address interrupt flag (APIF) is set to one if the received address is recognized. The slave address match logic supports recognition of 7- and 10-bits addresses, and general call address.
When using 7-bit or 10-bit address recognition mode, the upper 7-bits of the address register (ADDR[7:1]) represents the slave address and the least significant bit (ADDR[0]) is used for general call address recognition. Setting the ADDR[0] bit in this case enables the general call address recognition logic. The TWI slave address match logic only support recognition of the first byte of a 10-bit address i.e. by setting ADDRA[7:1] = “0b11110aa” where “aa” represents bit 9 and 8 or the slave address. The second 10-bit address byte must be handled by software.

26.5.13 Slave Data

Name: SDATA
Offset: 0x0D
Reset: 0x00
Property: -

Bit	7	6	5	4	3	2	1	0
	DATA[7:0]							
Access	R/W	R/W	R/W	R/W	R/W	R/W	R/W	R/W
Reset	0	0	0	0	0	0	0	0

Bits 7:0 – DATA[7:0] Data
The slave data register I/O location (DATA) provides direct access to the slave's physical shift register, which is used both to shift data out onto the bus (transmit) and to shift in data received from the bus (receive). The direct access implies that the data register cannot be accessed during byte transmissions. Built-in logic prevents any write accesses to the data register during the shift operations. Reading valid data or writing data to be transmitted can only be successfully done when the bus clock (SCL) is held low by the slave, i.e. when the slave CLKHOLD bit is set. However, it is not necessary to check the CLKHOLD bit in software before accessing the slave DATA register if the software keeps track of the present protocol state by using interrupts or observing the interrupt flags. Accessing the slave DATA register, assumed that clock hold is active, auto-trigger bus operations dependent of the state of the slave acknowledge action command bits (ACKACT) and type of register access (read or write).

26.5.14 Slave Address Mask

Name: SADDRMASK
Offset: 0x0E
Reset: 0x00
Property: -

Bit	7	6	5	4	3	2	1	0
	ADDRMASK[6:0]							ADDREN
Access	R/W	R/W	R/W	R/W	R/W	R/W	R/W	R/W
Reset	0	0	0	0	0	0	0	0

Bits 7:1 – ADDRMASK[6:0] Address Mask
The ADDRMASK register acts as a second address match register, or an address mask register depending on the ADDREN setting.
If ADDREN is written to '0', ADDRMASK can be loaded with a 7-bit Slave Address mask. Each of the bits in ADDRMASK register can mask (disable) the corresponding address bits in the TWI slave Address Register (ADDR). If the mask bit is written to '1' then the address match logic ignores the compare between the incoming address bit and the corresponding bit in slave ADDR register. In other words, masked bits will always match.
If ADDREN is written to '1', the slave ADDRMASK can be loaded with a second slave address in addition to the ADDR register. In this mode, the slave will match on 2 unique addresses, one in ADDR and the other in ADDRMASK.

Bit 0 – ADDREN Address Mask Enable
If this bit is written to '1', the slave address match logic responds to the 2 unique addresses in slave ADDR and ADDRMASK.
If this bit is '0', the ADDRMASK register acts as a mask to the slave ADDR register.

27. CRCSCAN - Cyclic Redundancy Check Memory Scan

27.1 Features

- CRC-16-CCITT
- Can Check Full Flash, Application Code, and/or Boot Section
- Priority Check Mode
- Selectable NMI Trigger on Failure
- User Configurable Check During Internal Reset Initialization
- Paused in all CPU Sleep Modes

27.2 Overview

A Cyclic Redundancy Check (CRC) takes a data stream of bytes from the NVM (either entire Flash, only Boot section, or both application code and Boot section) and generates a checksum. The CRC peripheral (CRCSCAN) can be used to detect errors in program memory.

The last location in the section to check has to contain the correct pre-calculated checksum for comparison. If the checksum calculated by the CRCSCAN and the pre-calculated checksums match, a Status bit in the CRCSCAN is set. If they do not match, the Status register will indicate that it failed. The user can choose to let the CRCSCAN generate a Non-Maskable Interrupt (NMI) if the checksums do not match.

An *n*-bit CRC, applied to a data block of arbitrary length, will detect any single alteration (error burst) up to *n* bits in length. For longer error bursts, a fraction $1-2^{-n}$ will be detected.

The CRC-generator supports CRC-16-CCITT.

Polynomial:

- CRC-16-CCITT: $x^{16} + x^{12} + x^5 + 1$

The CRC reads in byte-by-byte of the content of the section(s) it is set up to check, starting with byte 0, and generates a new checksum per byte. The byte is sent through an implementation corresponding to Figure 27-1, starting with the Most Significant bit. If the last two bytes in the section contain the correct checksum, the CRC will pass. See 27.3.2.1 Checksum for how to place the checksum. The initial value of the Checksum register is 0xFFFF.

Figure 27-1. CRC Implementation Description

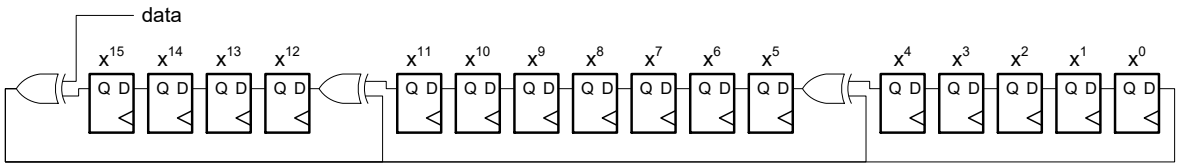

27.2.1 Block Diagram

Figure 27-2. Cyclic Redundancy Check Block Diagram

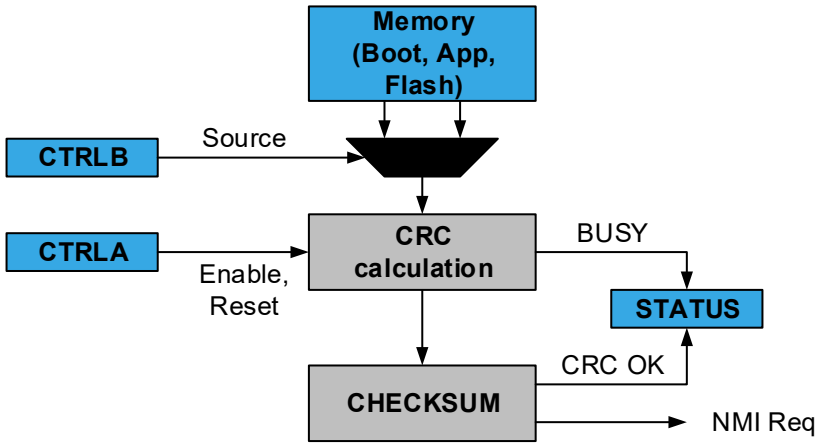

27.2.2 System Dependencies

In order to use this peripheral, other parts of the system must be configured correctly, as described below.

Table 27-1. System Product Dependencies

Dependency	Applicable	Peripheral
Clocks	Yes	CLKCTRL
I/O Lines and Connections	No	-
Interrupts	Yes	CPUINT
Events	No	-
Debug	Yes	UPDI

Related Links

11.2.2.1 Clocks
27.2.2.3 Interrupts

27.2.2.1 Clocks

This peripheral depends on the peripheral clock.

Related Links

10. CLKCTRL - Clock Controller

27.2.2.2 I/O Lines and Connections

Not applicable.

27.2.2.3 Interrupts

Using the interrupts of this peripheral requires the Interrupt Controller to be configured first.

Related Links

13. CPUINT - CPU Interrupt Controller
8.7.3 SREG
27.3.3 Interrupts

27.2.2.4 Events

Not applicable.

27.2.2.5 Debug Operation

Whenever the debugger accesses the device, for instance reading or writing a peripheral or memory location, the CRCSCAN peripheral will be disabled.

If the CRCSCAN is busy when the debugger accesses the device, the CRCSCAN will restart the ongoing operation when the debugger accesses an internal register or when the debugger disconnects.

The BUSY bit in the Status register (CRCSCAN.STATUS) will read '1' if the CRCSCAN was busy when the debugger caused it to disable, but it will not actively check any section as long as the debugger keeps it disabled. There are synchronized CRC status bits in the debugger's internal register space, which can be read by the debugger without disabling the CRCSCAN. Reading the debugger's internal CRC status bits will make sure that the CRCSCAN is enabled.

It is possible to write the CRCSCAN.STATUS register directly from the debugger:

- BUSY bit in CRCSCAN.STATUS:
  - Writing the BUSY bit to '0' will stop the ongoing CRC operation (so that the CRCSCAN does not restart its operation when the debugger allows it).
  - Writing the BUSY bit to '1' will make the CRC start a single check with the settings in the Control B register (CRCSCAN.CTRLB), but not until the debugger allows it.

  As long as the BUSY bit in CRCSCAN.STATUS is '1', CRCSCAN.CRCTRLB and the Non-Maskable Interrupt Enable bit (NMIEN) in the Control A register (CRCSCAN.CTRLA) cannot be altered.
- OK bit in CRCSCAN.STATUS:
  - Writing the OK bit to '0' can trigger a non-maskable interrupt (NMI) if the NMIEN bit in CRCSCAN.CTRLA is '1'. If an NMI has been triggered, no writes to the CRCSCAN are allowed.
  - Writing the OK bit to '1' will make the OK bit read as '1' when the BUSY bit in CRCSCAN.STATUS is '0'.

Writes to CRCSCAN.CTRLA and CRCSCAN.CTRLB from the debugger are treated in the same way as writes from the CPU.

Related Links

33. UPDI - Unified Program and Debug Interface

27.5.1 CTRLA

27.5.2 CTRLB

27.3 Functional Description

27.3.1 Initialization

To enable a CRC in software (or via the debugger):

1. Write the Source (SRC) bit field of the Control B register (CRCSCAN.CTRLB) to select the desired source settings. Ensure that the MODE bit field in CRCSCAN.CTRLB is 0x0.
2. Enable the CRCSCAN by writing a '1' to the ENABLE bit in the Control A register (CRCSCAN.CTRLA).
3. The CRC will start after three cycles, and the CPU will continue executing during these three cycles.

The CRCSCAN can be enabled during the internal Reset initialization to ensure the Flash is OK before letting the CPU execute code. If the CRCSCAN fails during the internal Reset initialization, the CPU is not allowed to start normal code execution - the device remains in Reset state instead of executing code with unexpected behavior. The full source settings are available during the internal Reset initialization. See the Fuse description for more information.

If the CRCSCAN was enabled during the internal Reset initialization, the CRC Control A and B registers will reflect this when normal code execution is started:

- The ENABLE bit in CRCSCAN.CTRLA will be '1'
- The MODE bit field in CRCSCAN.CTRLB will be non-zero
- The SRC bit field in CRCSCAN.CTRLB will reflect the checked section(s).

The CRCSCAN can be enabled during Reset by configuring the CRCSRC fuse in FUSE.SYSCFG0.

Related Links

27.5.1 CTRLA
27.5.2 CTRLB
6.9 FUSES - Configuration and User Fuses
12.3.2.2 Reset time

27.3.2 Operation

The CRC is operating in Priority mode: the CRC peripheral has priority access to the Flash and will stall the CPU until completed.

In Priority mode, the CRC fetches a new word (16-bit) on every third main clock cycle, or when the CRC peripheral is configured to do a scan from start-up.

27.3.2.1 Checksum

The pre-calculated checksum must be present in the last location of the section to be checked. If the BOOT section should be checked, the 16-bit checksum must be saved in the last two bytes of the BOOT section, and similarly for APPLICATION and entire Flash. Table 27-2 shows explicitly how the checksum should be stored for the different sections. Also, see the CRCSCAN.CTRLB register description for how to configure which section to check and the device fuse description for how to configure the BOOTEND and APPEND fuses.

Table 27-2. How to Place the Pre-Calculated 16-Bit Checksum in Flash

Section to Check	CHECKSUM[15:8]	CHECKSUM[7:0]
BOOT	FUSE_BOOTEND*256-2	FUSE_BOOTEND*256-1
BOOT and APPLICATION	FUSE_APPEND*256-2	FUSE_APPEND*256-1
Full Flash	FLASHEND-1	FLASHEND

27.3.3 Interrupts

Table 27-3. Available Interrupt Vectors and Sources

Offset	Name	Vector Description	Conditions
0x00	NMI	Non-Maskable Interrupt	Generated on CRC failure

When the interrupt condition occurs, the OK flag in the Status register (CRCSCAN.STATUS) is cleared to '0'.

An interrupt is enabled by writing a '1' to the respective Enable bit (NMIEN) in the Control A register (CRCSCAN.CTRLA), but can only be disabled with a system Reset. An NMI is generated when the OK flag in CRCSCAN.STATUS is cleared and the NMIEN bit is '1'. The NMI request remains active until a system Reset, and cannot be disabled.

A non-maskable interrupt can be triggered even if interrupts are not globally enabled.

Related Links
27.5.1 CTRLA
27.5.3 STATUS
13. CPUINT - CPU Interrupt Controller

27.3.4 Sleep Mode Operation

CRCSCAN is halted in all sleep modes. In all CPU Sleep modes, the CRCSCAN peripheral is halted and will resume operation when the CPU wakes up.

The CRCSCAN starts operation three cycles after writing the EN bit in CRCSCAN.CTRLA. During these three cycles, it is possible to enter Sleep mode. In this case:

1. The CRCSCAN will not start until the CPU is woken up.
2. Any interrupt handler will execute after CRCSCAN has finished.

27.3.5 Configuration Change Protection

Not applicable.

27.4 Register Summary - CRCSCAN

Offset	Name	Bit Pos.								
0x00	CTRLA	7:0	RESET						NMIEN	ENABLE
0x01	CTRLB	7:0			MODE[1:0]				SRC[1:0]	
0x02	STATUS	7:0							OK	BUSY

27.5 Register Description

27.5.1 Control A

Name: CTRLA
Offset: 0x00
Reset: 0x00
Property: -

If an NMI has been triggered, this register is not writable.

Bit	7	6	5	4	3	2	1	0
	RESET						NMIEN	ENABLE
Access	R/W						R/W	R/W
Reset	0						0	0

Bit 7 – RESET Reset CRCSCAN
Writing this bit to '1' resets the CRCSCAN peripheral: The CRCSCAN Control registers and STATUS register (CTRLA, CTRLB, STATUS) will be cleared one clock cycle after the RESET bit was written to '1'.
If NMIEN is '0', this bit is writable both when the CRCSCAN is busy (the BUSY bit in CRCSCAN.STATUS is '1') and not busy (the BUSY bit is '0'), and will take effect immediately.
If NMIEN is '1', this bit is only writable when the CRCSCAN is not busy (the BUSY bit in CRCSCAN.STATUS is '0').
The RESET bit is a strobe bit.

Bit 1 – NMIEN Enable NMI Trigger
When this bit is written to '1', any CRC failure will trigger an NMI.
This can only be cleared by a system Reset - it is not cleared by a write to the RESET bit.
This bit can only be written to '1' when the CRCSCAN is not busy (the BUSY bit in CRCSCAN.STATUS is '0').

Bit 0 – ENABLE Enable CRCSCAN
Writing this bit to '1' enables the CRCSCAN peripheral with the current settings. It will stay '1' even after a CRC check has completed, but writing it to ‘1’ again will start a new check.
Writing the bit to '0' will disable the CRCSCAN after the ongoing check is completed (after reaching the end of the section it is set up to check). A failure in the ongoing check will still be detected and can cause an NMI if the NMIEN bit is '1'.
The CRCSCAN can be enabled during the internal Reset initialization to verify Flash sections before letting the CPU start normal code execution (see the device data sheet fuse description). If the CRCSCAN is enabled during the internal Reset initialization, the ENABLE bit will read as '1' when normal code execution starts.
To see whether the CRCSCAN peripheral is busy with an ongoing check, poll the Busy bit (BUSY) in the STATUS register (CRCSCAN.STATUS).

Related Links
6.9 FUSES - Configuration and User Fuses
12.3.2.2 Reset time

27.5.2 Control B

Name: CTRLB
Offset: 0x01
Reset: 0x00
Property: -

The CTRLB register contains the mode and source settings for the CRC. It is not writable when the CRC is busy or when an NMI has been triggered.

Bit	7	6	5	4	3	2	1	0
			MODE[1:0]				SRC[1:0]	
Access			R/W	R/W			R/W	R/W
Reset			0	0			0	0

Bits 5:4 – MODE[1:0] CRC Flash Access Mode
The CRC can be enabled during internal Reset initialization to verify Flash sections before letting the CPU start (see the device data sheet fuse description). If the CRC is enabled during internal Reset initialization, the MODE bit field will read out non-zero when normal code execution starts. To ensure proper operation of the CRC under code execution, write the MODE bit to 0x0 again.

Value	Name	Description
0x0	PRIORITY	The CRC module runs a single check with priority to Flash. The CPU is halted until the CRC completes.
other	-	Reserved

Bits 1:0 – SRC[1:0] CRC Source
The SRC bit field selects which section of the Flash the CRC module should check. To set up section sizes, refer to the fuse description.
The CRC can be enabled during internal Reset initialization to verify Flash sections before letting the CPU start (see fuse description). If the CRC is enabled during internal Reset initialization, the SRC bit field will read out as FLASH, BOOTAPP, or BOOT when normal code execution starts (depending on the configuration).

Value	Name	Description
0x0	FLASH	The CRC is performed on the entire Flash (boot, application code, and application data sections).
0x1	BOOTAPP	The CRC is performed on the boot and application code sections of Flash.
0x2	BOOT	The CRC is performed on the boot section of Flash.
0x3	-	Reserved.

Related Links
6.9 FUSES - Configuration and User Fuses
12.3.2.2 Reset time

27.5.3 Status

Name: STATUS
Offset: 0x02
Reset: 0x02
Property: -

The STATUS register contains the busy and OK information. It is not writable, only readable.

Bit	7	6	5	4	3	2	1	0
							OK	BUSY
Access							R	R
Reset							1	0

Bit 1 – OK CRC OK
When this bit is read as '1', the previous CRC completed successfully. The bit is set to '1' from Reset but is cleared to '0' when enabling. As long as the CRC module is busy, it will be read '0'. When running continuously, the CRC status must be assumed OK until it fails or is stopped by the user.

Bit 0 – BUSY CRC Busy
When this bit is read as '1', the CRC module is busy. As long as the module is busy, the access to the control registers is limited.

28. CCL – Configurable Custom Logic

28.1 Features

- Glue logic for general purpose PCB design
- Up to two Programmable LookUp Tables LUT[1:0]
- Combinatorial Logic Functions: Any logic expression which is a function of up to three inputs.
- Sequential Logic Functions:
  Gated D Flip-Flop, JK Flip-Flop, gated D Latch, RS Latch
- Flexible Lookup Table Inputs Selection:
  - I/Os
  - Events
  - Subsequent LUT Output
  - Internal Peripherals
    - Analog Comparator
    - Timer/Counters
    - USART
    - SPI
- Clocked by system clock or other peripherals
- Output can be connected to IO pins or Event System
- Optional synchronizer, filter, or edge detector available on each LUT output

28.2 Overview

The Configurable Custom Logic (CCL) is a programmable logic peripheral which can be connected to the device pins, to events, or to other internal peripherals. The CCL can serve as "glue logic" between the device peripherals and external devices. The CCL can eliminate the need for external logic components, and can also help the designer to overcome real-time constraints by combining core independent peripherals to handle the most time critical parts of the application independent of the CPU.

The CCL peripheral has one pair of Lookup Tables (LUT). Each LUT consists of three inputs, a truth table, and a filter/edge detector. Each LUT can generate an output as a user programmable logic expression with three inputs. Inputs can be individually masked.

The output can be generated from the inputs combinatorially, and can be filtered to remove spikes. An optional Sequential module can be enabled. The inputs to the Sequential module are individually controlled by two independent, adjacent LUT (LUT0/LUT1) outputs, enabling complex waveform generation.

© 2019 Microchip Technology Inc.

28.2.1 Block Diagram

Figure 28-1. Configurable Custom Logic

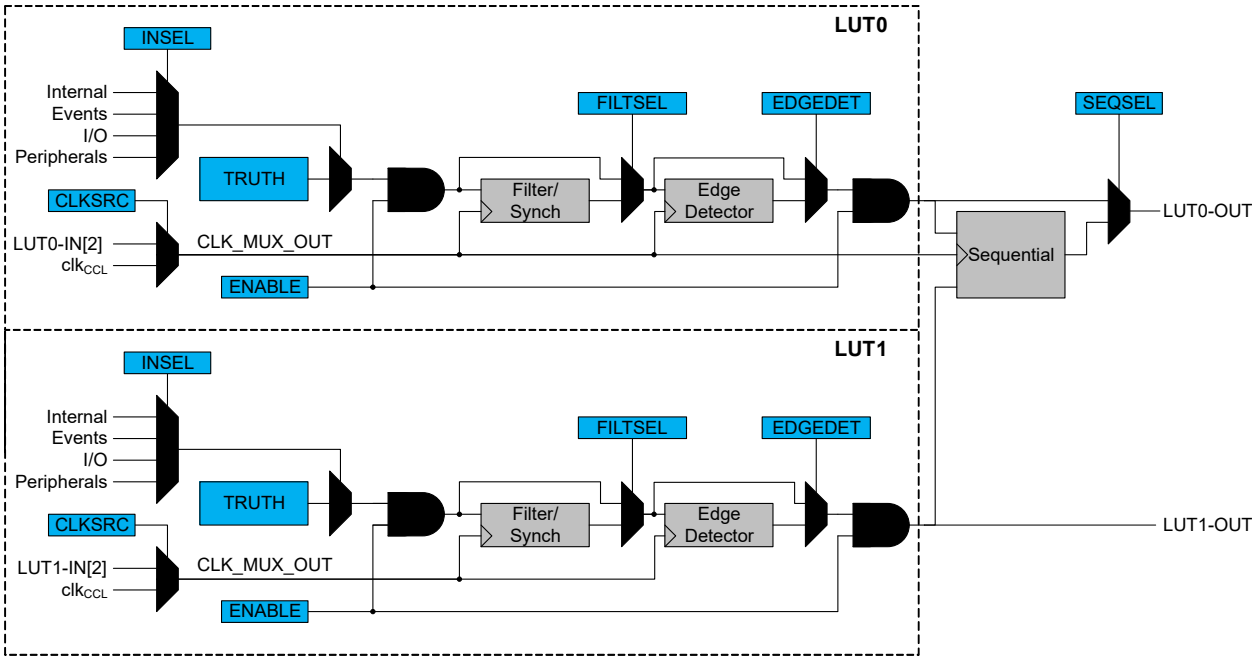

28.2.2 Signal Description

Pin Name	Type	Description
LUTn-OUT	Digital output	Output from lookup table
LUTn-IN[2:0]	Digital input	Input to lookup table

Refer to *I/O Multiplexing and Considerations* for details on the pin mapping for this peripheral. One signal can be mapped on several pins.

Related Links

5. I/O Multiplexing and Considerations

28.2.3 System Dependencies

In order to use this peripheral, other parts of the system must be configured correctly, as described below.

Table 28-1. CCL System Dependencies

Dependency	Applicable	Peripheral
Clocks	Yes	CLKCTRL
I/O Lines and Connections	Yes	PORT
Interrupts	Yes	CPUINT
Events	Yes	EVSYS
Debug	Yes	UPDI

28.2.3.1 Clocks

By default, the CCL is using the peripheral clock of the device (CLK_PER).

Alternatively, the CCL can be clocked by a peripheral input that is available on LUT n input line 2 (LUTn_IN[2]). This is configured by writing a '1' to the Clock Source Selection bit (CLKSRC) in the LUTn Control A register

(CCL.LUTnCTRLA). The sequential block is clocked by the same clock as that of its even LUT in the LUT pair (SEQn.clk = LUT2n.clk). It is advised to disable the peripheral by writing a '0' to the Enable bit (ENABLE) in the Control A register (CCL.CTRLA) before configuring the CLKSRC bit in CCL.LUTnCTRLA.

Alternatively, the input line 2 (IN[2]) of a LUT can be used to clock the LUT and the corresponding Sequential block. This is enabled by writing a '1' to the Clock Source Selection bit (CLKSRC) in the LUTn Control A register (CCL.LUTnCTRLA).

The CCL must be disabled before changing the LUT clock source: write a '0' to the Enable bit (ENABLE) in Control A register (CCL.CTRLA).

Related Links

10. CLKCTRL - Clock Controller

28.2.3.2 I/O Lines

The CCL can take inputs and generate output through I/O pins. For this to function properly, the I/O pins must be configured to be used by a Look-up Table (LUT).

Related Links

16. PORT - I/O Pin Configuration

28.2.3.3 Interrupts

Not applicable.

28.2.3.4 Events

The CCL can use events from other peripherals and generate events that can be used by other peripherals. For this feature to function, the Events have to be configured properly. Refer to the Related Links below for more information about the Event Users and Event Generators.

Related Links

14. EVSYS - Event System

28.2.3.5 Debug Operation

When the CPU is halted in Debug mode the CCL continues normal operation. However, the CCL cannot be halted when the CPU is halted in Debug mode. If the CCL is configured in a way that requires it to be periodically serviced by the CPU, improper operation or data loss may result during debugging.

28.3 Functional Description

28.3.1 Initialization

The following bits are enable-protected, meaning that they can only be written when the corresponding even LUT is disabled (ENABLE=0 in CCL.LUT0CTRLA):

- Sequential Selection (SEQSEL) in Sequential Control 0 register (CCL.SEQCTRL0)

The following registers are enable-protected, meaning that they can only be written when the corresponding LUT is disabled (ENABLE=0 in CCL.LUT0CTRLA):

- LUT n Control x register, except ENABLE bit (CCL.LUTnCTRLx)

Enable-protected bits in the CCL.LUTnCTRLx registers can be written at the same time as ENABLE in CCL.LUTnCTRLx is written to '1', but not at the same time as ENABLE is written to '0'.

Enable-protection is denoted by the Enable-Protected property in the register description.

28.3.2 Operation

28.3.2.1 Enabling, Disabling and Resetting

The CCL is enabled by writing a '1' to the ENABLE bit in the Control register (CCL.CTRLA). The CCL is disabled by writing a '0' to that ENABLE bit.

Each LUT is enabled by writing a '1' to the LUT Enable bit (ENABLE) in the LUT n Control A register (CCL.LUTnCTRLA). Each LUT is disabled by writing a '0' to the ENABLE bit in CCL.LUTnCTRLA.

28.3.2.2 Lookup Table Logic

The lookup table in each LUT unit can generate a combinational logic output as a function of up to three inputs IN[2:0]. Unused inputs can be masked (tied low). The truth table for the combinational logic expression is defined by the bits in the CCL.TRUTHn registers. Each combination of the input bits (IN[2:0]) corresponds to one bit in the TRUTHn register, as shown in the table:

Table 28-2. Truth Table of LUT

IN[2]	IN[1]	IN[0]	OUT
0	0	0	TRUTH[0]
0	0	1	TRUTH[1]
0	1	0	TRUTH[2]
0	1	1	TRUTH[3]
1	0	0	TRUTH[4]
1	0	1	TRUTH[5]
1	1	0	TRUTH[6]
1	1	1	TRUTH[7]

28.3.2.3 Truth Table Inputs Selection

Input Overview

The inputs can be individually:

- Masked
- Driven by peripherals:
  - Analog comparator output (AC)
  - Timer/Counters waveform outputs (TC)
- Driven by internal events from Event System
- Driven by other CCL sub-modules

The Input Selection for each input y of LUT n is configured by writing the Input y Source Selection bit in the LUT n Control x=[B,C] registers

- INSEL0 in CCL.LUTnCTRLB
- INSEL1 in CCL.LUTnCTRLB
- INSEL2 in CCL.LUTnCTRLC.

Internal Feedback Inputs (FEEDBACK)

When selected (INSELy=FEEDBACK in CCL.LUTnCTRLx), the Sequential (SEQ) output is used as input for the corresponding LUT.

The output from an internal sequential module can be used as input source for the LUT, see figure below for an example for LUT0 and LUT1. The sequential selection for each LUT follows the formula:

$\mathrm{IN}[2\mathrm{N}][i] = \mathrm{SEQ}[N]$

$\mathrm{IN}[2\mathrm{N}+1][i] = \mathrm{SEQ}[N]$

With *N* representing the sequencer number and *i*=0,1 representing the LUT input index.

For details, refer to 28.3.2.6 Sequential Logic.

Figure 28-2. Feedback Input Selection

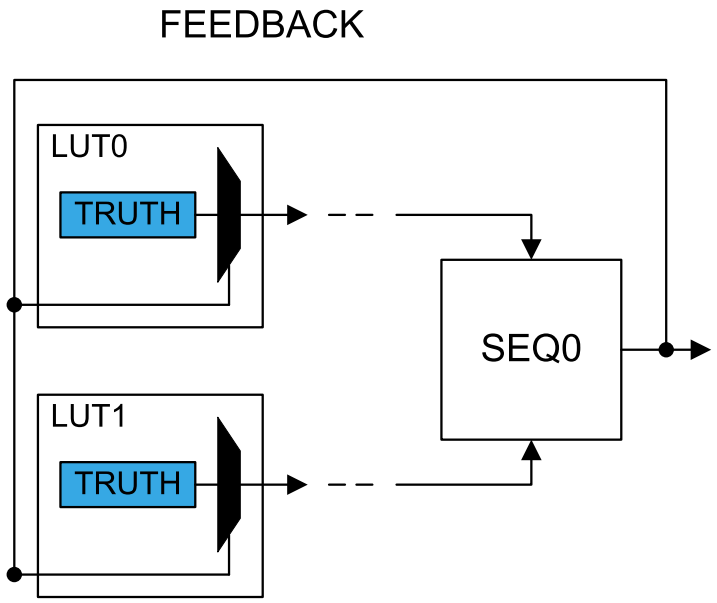

Linked LUT (LINK)
When selecting the LINK input option, the next LUT's direct output is used as the LUT input. In general, LUT[n+1] is linked to the input of LUT[n]. As example LUT1 is the input for LUT0.

Figure 28-3. Linked LUT Input Selection

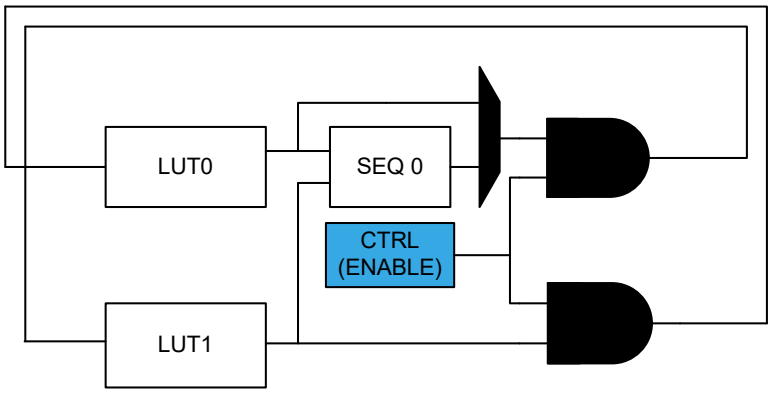

Internal Events Inputs Selection (EVENT)
Asynchronous events from the Event System can be used as input to the LUT. Two event input lines (EVENT0 and EVENT1) are available, and can be selected as LUT input. Before selecting the EVENT input option by writing to the LUT CONTROL A or B register (CCL.LUTnCTRLB or LUTnCTRLC), the Event System must be configured.

I/O Pin Inputs (IO)
When selecting the IO option, the LUT input will be connected to its corresponding IO pin. Refer to the I/O Multiplexing section for more details about where the LUTnINy are located.

Figure 28-4. I/O Pin Input Selection

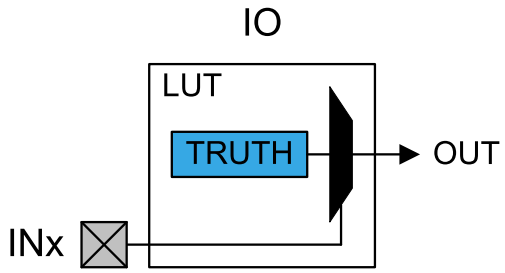

Peripherals

The different peripherals on the three input lines of each LUT are selected by writing to the respective LUT n Input y bit fields in the LUT n Control B and C registers:

- INSEL0 in CCL.LUTnCTRLB
- INSEL1 in CCL.LUTnCTRLB
- INSEL2 in CCL.LUTnCTRLC.

Related Links

5. I/O Multiplexing and Considerations
16. PORT - I/O Pin Configuration
10. CLKCTRL - Clock Controller
29. AC – Analog Comparator
20. TCA - 16-bit Timer/Counter Type A
22. TCD - 12-bit Timer/Counter Type D
24. USART - Universal Synchronous and Asynchronous Receiver and Transmitter
25. SPI - Serial Peripheral Interface
26. TWI - Two Wire Interface
5. I/O Multiplexing and Considerations

28.3.2.4 Filter

By default, the LUT output is a combinational function of the LUT inputs. This may cause some short glitches when the inputs change value. These glitches can be removed by clocking through filters, if demanded by application needs.

The Filter Selection bits (FILTSEL) in the LUT Control registers (CCL.LUTnCTRLA) define the digital filter options. When a filter is enabled, the output will be delayed by two to five CLK cycles (peripheral clock or alternative clock). One clock cycle after the corresponding LUT is disabled, all internal filter logic is cleared.

Figure 28-5. Filter

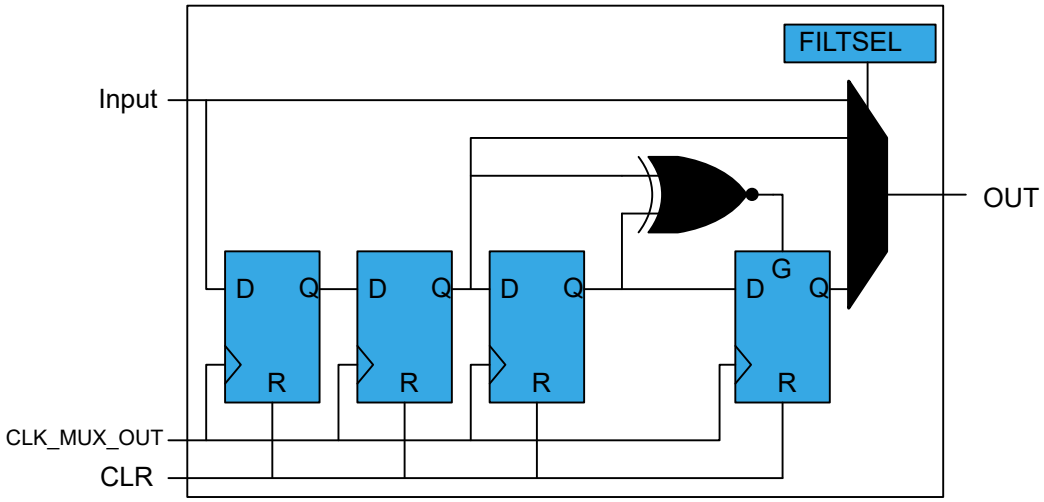

28.3.2.5 Edge Detector

The edge detector can be used to generate a pulse when detecting a rising edge on its input. To detect a falling edge, the TRUTH table should be programmed to provide inverted output.

The edge detector is enabled by writing '1' to the Edge Selection bit (EDGEDET) in the LUT n Control A register (CCL.LUTnCTRLA). In order to avoid unpredictable behavior, a valid filter option must be enabled as well.

Edge detection is disabled by writing a '0' to EDGEDET in CCL.LUTnCTRLA. After disabling a LUT, the corresponding internal Edge Detector logic is cleared one clock cycle later.

Figure 28-6. Edge Detector

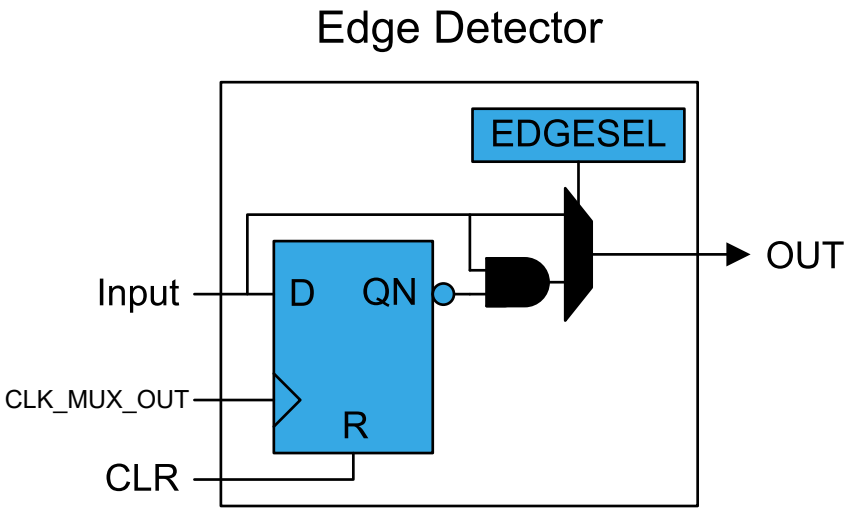

28.3.2.6 Sequential Logic

Each LUT pair can be connected to an internal Sequential block. A Sequential block can function as either D flip-flop, JK flip-flop, gated D-latch, or RS-latch. The function is selected by writing the Sequential Selection bits (SEQSEL) in Sequential Control register (CCL.SEQCTRLn).

The Sequential block receives its input from the either LUT, filter or edge detector, depending on the configuration.

The Sequential block is clocked by the same clock as the corresponding LUT, which is either the peripheral clock or input line 2 (IN[2]). This is configured by the Clock Source bit (CLKSRC) in the LUT n Control A register (CCL.LUTnCTRLA).

When the even LUT (LUT0) is disabled, the latch is asynchronously cleared, during which the flip-flop reset signal (R) is kept enabled for one clock cycle. In all other cases, the flip-flop output (OUT) is refreshed on rising edge of the clock, as shown in the respective *Characteristics* tables.

Gated D Flip-Flop (DFF)
The D-input is driven by the even LUT output (LUT0), and the G-input is driven by the odd LUT output (LUT1).

Figure 28-7. D Flip-Flop

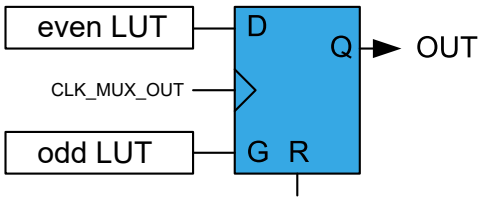

Table 28-3. DFF Characteristics

R	G	D	OUT
1	X	X	Clear
0	1	1	Set
		0	Clear
	0	X	Hold state (no change)

JK Flip-Flop (JK)
The J-input is driven by the even LUT output (LUT0), and the K-input is driven by the odd LUT output (LUT1).

Figure 28-8. JK Flip-Flop

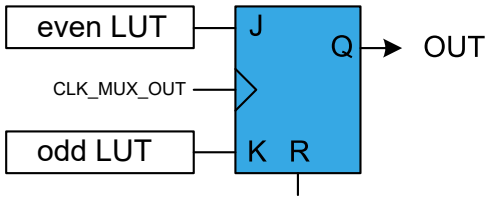

Table 28-4. JK Characteristics

R	J	K	OUT
1	X	X	Clear
0	0	0	Hold state (no change)
0	0	1	Clear
0	1	0	Set
0	1	1	Toggle

Gated D-Latch (DLATCH)
The D-input is driven by the even LUT output (LUT0), and the G-input is driven by the odd LUT output (LUT1).

Figure 28-9. D-Latch

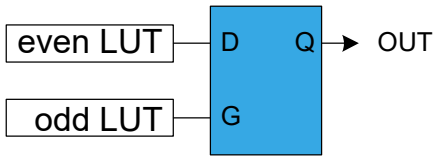

Table 28-5. D-Latch Characteristics

G	D	OUT
0	X	Hold state (no change)
1	0	Clear
1	1	Set

RS Latch (RS)
The S-input is driven by the even LUT output (LUT0), and the R-input is driven by the odd LUT output (LUT1).

Figure 28-10. RS-Latch

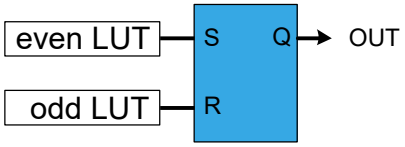

Table 28-6. RS-latch Characteristics

S	R	OUT
0	0	Hold state (no change)
0	1	Clear
1	0	Set
1	1	Forbidden state

28.3.2.7 Clock Source Settings

The Filter, Edge Detector and Sequential logic are by default clocked by the system clock (CLK_PER). It is also possible to use the LUT input 2 (IN[2]) to clock these blocks (CLK_MUX_OUT in figure Figure 28-11). This is configured by writing the Clock Source bit (CLKSRC) in the LUT Control A register (CCL.LUTnCTRLA) to '1'.

Figure 28-11. Clock Source Settings

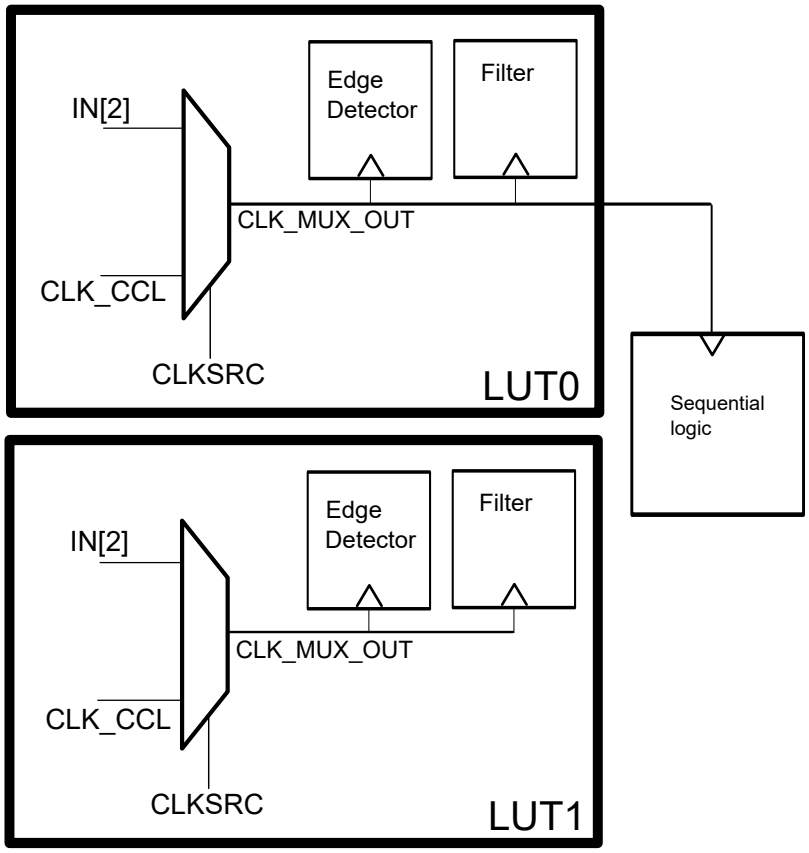

When the Clock Source bit (CLKSRC) is '1', IN[2] is used to clock the corresponding Filter and Edge Detector (CLK_MUX_OUT). The Sequential logic is clocked by CLK_MUX_OUT of the even LUT in the pair. When CLKSRC bit is '1', IN[2] is treated as MASKed (low) in the TRUTH table.

The CCL peripheral must be disabled while changing the clock source to avoid undetermined outputs from the peripheral.

28.3.3 Events

The CCL can generate the following output events:

- LUTnOUT: Lookup Table Output Value

The CCL can take the following actions on an input event:

- INx: The event is used as input for the TRUTH table.

Related Links

14. EVSYS - Event System

28.3.4 Sleep Mode Operation

Writing the Run In Standby bit (RUNSTDBY) in the Control A register (CCL.CTRLA) to '1' will allow the system clock to be enabled in Standby sleep mode.

If RUNSTDBY is '0' the system clock will be disabled in Standby sleep mode. If the Filter, Edge Detector or Sequential logic are enabled, the LUT output will be forced to zero in Standby sleep mode. In Idle sleep mode, the TRUTH table decoder will continue operation and the LUT output will be refreshed accordingly, regardless of the RUNSTDBY bit.

If the Clock Source bit (CLKSRC) in the LUT n Control A register (CCL.LUTnCTRLA) is written to '1', the LUT input 2 (IN[2]) will always clock the Filter, Edge Detector and Sequential block. The availability of the IN[2] clock in sleep modes will depend on the sleep settings of the peripheral employed.

28.3.5 Configuration Change Protection

Not applicable.

28.4 Register Summary - CCL

Offset	Name	Bit Pos.								
0x00	CTRLA	7:0		RUNSTDBY						ENABLE
0x01	SEQCTRL0	7:0					SEQSEL[3:0]			
0x02 ... 0x04	Reserved									
0x05	LUT0CTRLA	7:0	EDGEDET	CLKSRC	FILTSEL[1:0]		OUTEN			ENABLE
0x06	LUT0CTRLB	7:0	INSEL1[3:0]				INSEL0[3:0]			
0x07	LUT0CTRLC	7:0					INSEL2[3:0]			
0x08	TRUTH0	7:0	TRUTH[7:0]							
0x09	LUT1CTRLA	7:0	EDGEDET	CLKSRC	FILTSEL[1:0]		OUTEN			ENABLE
0x0A	LUT1CTRLB	7:0	INSEL1[3:0]				INSEL0[3:0]			
0x0B	LUT1CTRLC	7:0					INSEL2[3:0]			
0x0C	TRUTH1	7:0	TRUTH[7:0]							

28.5 Register Description

28.5.1 Control A

Name: CTRLA
Offset: 0x00 [ID-00000485]
Reset: 0x00
Property: -

Bit	7	6	5	4	3	2	1	0
		RUNSTDBY						ENABLE
Access		R/W						R/W
Reset		0						0

Bit 6 – RUNSTDBY Run in Standby
This bit indicates if the peripheral clock (CLK_PER) is kept running in Standby sleep mode. The setting is ignored for configurations where the CLK_PER is not required. For details refer to 28.3.4 Sleep Mode Operation.

Value	Description
0	System clock is not required in standby sleep mode.
1	System clock is required in standby sleep mode.

Bit 0 – ENABLE Enable

Value	Description
0	The peripheral is disabled.
1	The peripheral is enabled.

28.5.2 Sequential Control 0

Name: SEQCTRL0
Offset: 0x01 [ID-00000485]
Reset: 0x00
Property: Enable-Protected

Bit	7	6	5	4	3	2	1	0
					SEQSEL[3:0]			
Access					R/W	R/W	R/W	R/W
Reset					0	0	0	0

Bits 3:0 – SEQSEL[3:0] Sequential Selection
These bits select the sequential configuration.

Value	Name	Description
0x0	DISABLE	Sequential logic is disabled
0x1	DFF	D flip flop
0x2	JK	JK flip flop
0x3	LATCH	D latch
0x4	RS	RS latch
Other	-	Reserved

28.5.3 LUT n Control A

Name: LUTCTRLA
Offset: 0x05 + n*0x04 [n=0..1]
Reset: 0x00
Property: Enable-Protected

Bit	7	6	5	4	3	2	1	0
	EDGEDET	CLKSRC	FILTSEL[1:0]		OUTEN			ENABLE
Access	R/W	R/W	R/W	R/W	R/W			R/W
Reset	0	0	0	0	0			0

Bit 7 – EDGEDET Edge Detection

Value	Description
0	Edge detector is disabled.
1	Edge detector is enabled.

Bit 6 – CLKSRC Clock Source Selection
This bit selects whether the peripheral clock (CLK_PER) or any input present on input line 2 (IN[2]) is used as clock (CLK_MUX_OUT) for a LUT.
The CLK_MUX_OUT of the even LUT is used for clocking the Sequential block of a LUT pair.

Value	Description
0	CLK_PER is clocking the LUT.
1	IN[2] is clocking the LUT.

Bits 5:4 – FILTSEL[1:0] Filter Selection
These bits select the LUT output filter options:
Filter Selection

Value	Name	Description
0x0	DISABLE	Filter disabled
0x1	SYNCH	Synchronizer enabled
0x2	FILTER	Filter enabled
0x3	-	Reserved

Bit 3 – OUTEN Output Enable
This bit enables the LUT output to the LUTnOUT pin. When written to '1', the pin configuration of the PORT I/O-Controller is overridden.

Value	Description
0	Output to pin disabled.
1	Output to pin enabled.

Bit 0 – ENABLE LUT Enable

Value	Description
0	The LUT is disabled.
1	The LUT is enabled.

28.5.4 LUT n Control B

Name: LUTCTRLB
Offset: 0x06 + n*0x04 [n=0..1]
Reset: 0x00
Property: Enable-Protected

SPI connections to the CCL work only in master SPI mode.

USART connections to the CCL work only in asynchronous/synchronous USART Master mode.

Bit	7	6	5	4	3	2	1	0
	INSEL1[3:0]				INSEL0[3:0]			
Access	R/W	R/W	R/W	R/W	R/W	R/W	R/W	R/W
Reset	0	0	0	0	0	0	0	0

Bits 7:4 – INSEL1[3:0] LUT n Input 1 Source Selection
These bits select the source for input 1 of LUT n:

Value	Name	Description
0x0	MASK	Masked input
0x1	FEEDBACK	Feedback input
0x2	LINK	Linked other LUT as input source
0x3	EVENT0	Event input source 0
0x4	EVENT1	Event input source 1
0x5	IO	I/O pin LUTn-IN1 input source
0x6	AC0	AC0 OUT input source
0x7	TCB0	TCB WO input source
0x8	TCA0	TCA WO1 input source
0x9	TCD0	TCD WOB input source
0xA	USART0	USART TXD input source
0xB	SPI0	SPI MOSI input source

Bits 3:0 – INSEL0[3:0] LUT n Input 0 Source Selection
These bits select the source for input 0 of LUT n:

Value	Name	Description
0x0	MASK	Masked input
0x1	FEEDBACK	Feedback input
0x2	LINK	Linked other LUT as input source
0x3	EVENT0	Event input source 0
0x4	EVENT1	Event input source 1
0x5	IO	I/O pin LUTn-IN0 input source
0x6	AC0	AC0 OUT input source
0x7	TCB0	TCB WO input source
0x8	TCA0	TCA WO0 input source
0x9	TCD0	TCD WOAn input source
0xA	USART0	USART XCK input source
0xB	SPI0	SPI SCK input source
Other	-	Reserved

28.5.5 LUT n Control C

Name: LUTCTRLC
Offset: 0x07 + n*0x04 [n=0..1]
Reset: 0x00
Property: Enable-Protected

Bit	7	6	5	4	3	2	1	0
					INSEL2[3:0]			
Access					R/W	R/W	R/W	R/W
Reset					0	0	0	0

Bits 3:0 – INSEL2[3:0] LUT n Input 2 Source Selection
These bits select the source for input 2 of LUT n:

Value	Name	Description
0x0	MASK	Masked input
0x1	FEEDBACK	Feedback input
0x2	LINK	Linked other LUT as input source
0x3	EVENT0	Event input source 0
0x4	EVENT1	Event input source 1
0x5	IO	I/O pin LUTn-IN2 input source
0x6	AC0	AC0 OUT input source
0x7	TCB0	TCB WO input source
0x8	TCA0	TCA WO2 input source
0x9	TCD0	TCD WOA input source
0xA	-	Reserved
0xB	SPI0	SPI MISO input source
other	-	Reserved

28.5.6 TRUTHn

Name: TRUTH
Offset: 0x08 + n*0x04 [n=0..1]
Reset: 0x00
Property: Enable-Protected

Bit	7	6	5	4	3	2	1	0
	TRUTH[7:0]							
Access	R/W	R/W	R/W	R/W	R/W	R/W	R/W	R/W
Reset	0	0	0	0	0	0	0	0

Bits 7:0 – TRUTH[7:0] Truth Table
These bits define the value of truth logic as a function of inputs IN[2:0].

29. AC – Analog Comparator

29.1 Features

- One instance of the AC controller, AC0
- 50ns response time for supply voltage above 2.7V
- Zero-cross detection
- Selectable hysteresis:
  - None
  - 10mV
  - 25mV
  - 50mV
- Analog comparator output available on pin
- Comparator output inversion available
- Flexible input selection:
  - 2 Positive pins
  - 2 Negative pins
  - Output from the DAC
  - Internal reference voltage
- Interrupt generation on:
  - Rising edge
  - Falling edge
  - Both egdes
- Event generation:
  - Comparator output

29.2 Overview

The Analog Comparator (AC) compares the voltage levels on two inputs and gives a digital output based on this comparison. The AC can be configured to generate interrupt requests and/or Events upon several different combinations of input change.

The dynamic behavior of the AC can be adjusted by a hysteresis feature. The hysteresis can be customized to optimize the operation for each application.

The input selection includes analog port pins, DAC output and internal references. The analog comparator output state can also be output on a pin for use by external devices.

The AC has one positive input and one negative input. The positive input source is one of a selection of 2 analog input pins. The negative inputs are chosen either from analog input pins or from internal inputs, such as an internal voltage reference.

The digital output from the comparator is '1' when the difference between the positive and the negative input voltage is positive, and '0' otherwise.

This device provides one instance of the AC controller, AC0.

29.2.1 Block Diagram

Figure 29-1. Analog Comparator

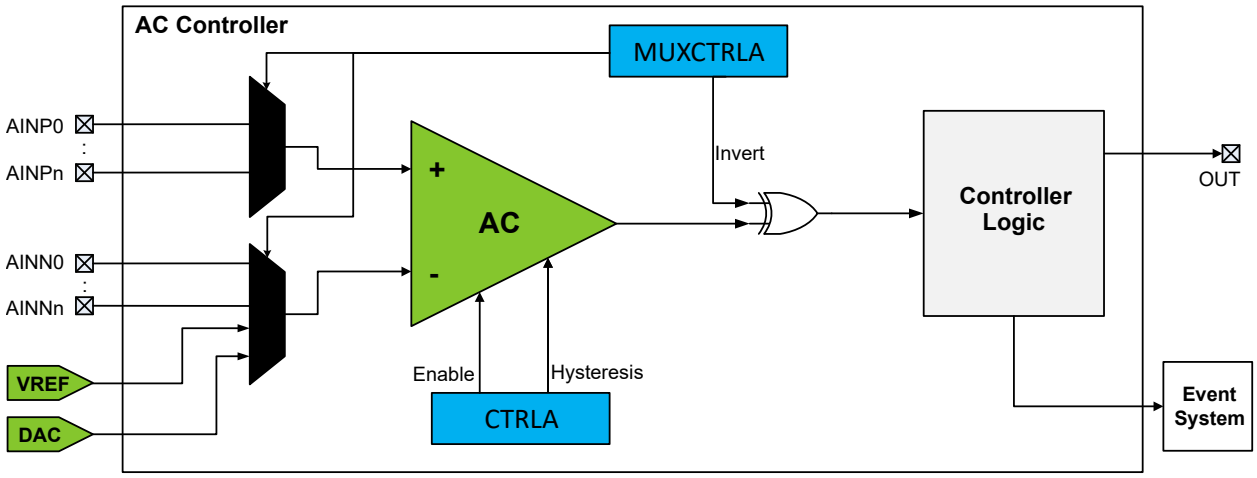

Note: Refer to 29.2.2 Signal Description for the number of AINN and AINP.

29.2.2 Signal Description

Signal	Description	Type
AINN0	Negative Input 0	Analog
AINN1	Negative Input 1	Analog
AINP0	Positive Input 0	Analog
AINP1	Positive Input 1	Analog
OUT	Comparator Output for AC	Digital

29.2.3 System Dependencies

In order to use this peripheral, other parts of the system must be configured correctly, as described below.

Table 29-1. AC System Dependencies

Dependency	Applicable	Peripheral
Clocks	Yes	CLKCTRL
I/O Lines and Connections	Yes	PORT
Interrupts	Yes	CPUINT
Events	Yes	EVSYS
Debug	Yes	UPDI

29.2.3.1 Clocks

This peripheral depends on the peripheral clock.

29.2.3.2 I/O Lines and Connections

I/O pins AINN0-AINN1, AINP0- AINP1 are all analog inputs to the AC.

For correct operation, the pins must be configured in the Port and Port Multiplexing peripherals.

It is recommended to disable the GPIO input when using the AC.

29.2.3.3 Interrupts

Using the interrupts of this peripheral requires the Interrupt Controller to be configured first.

29.2.3.4 Events

The events of this peripheral are connected to the Event System.

29.2.3.5 Debug Operation

This peripheral is unaffected by entering debug mode.

If the peripheral is configured to require periodical service by the CPU through interrupts or similar, improper operation or data loss may result during halted debugging.

29.3 Functional Description

29.3.1 Initialization

For basic operation, follow these steps:

- Configure the desired input pins in the PORT peripheral.
- Select the positive and negative input sources by writing the Positive and Negative Input MUX Selection bit fields (MUXPOS and MUXNEG) in the MUX Control A register (AC.MUXCTRLA).
- Optional: Enable the output to pin by writing a '1' to the Output Pad Enable bit (OUTEN) in the Control A register (AC.CTRLA).
- Enable the AC by writing a '1' to the ENABLE bit in AC.CTRLA.

During the start-up time after enabling the AC, the output of the AC may be invalid.

The start-up time of the AC by itself is at most 2.5µs. If a internal reference is used, the reference start-up time is normally longer than the AC start-up time. The VREF start-up time is at most 60µs.

29.3.2 Operation

29.3.2.1 Input Hysteresis

Applying an input hysteresis helps preventing constant toggling of the output when the noise-afflicted input signals are close to each other.

The input hysteresis can either be disabled or have one of three levels. The hysteresis is configured by writing to the Hysteresis Mode Select bit field (HYSMODE) in the Control A register (AC.CTRLA).

29.3.2.2 Input Sources

The AC has one positive and one negative input. The inputs can be pins and internal sources, such as a voltage reference.

Each input is selected by writing to the Positive and Negative Input MUX Selection bit field (MUXPOS and MUXNEG) in the MUX Control A register (AC.MUXTRLA).

29.3.2.2.1 Pin Inputs

The following Analog input pins on the port can be selected as input to the analog comparator

- AINN0
- AINN1
- AINP0
- AINP1

29.3.2.2.2 Internal Inputs

Two internal inputs are available for the analog comparator:

- Output from the DAC
- DAC and AC voltage reference

29.3.2.3 Low Power Mode

For power-conscious applications, the AC provides a Low Power with reduced power consumption and increased propagation delay.

This mode is enabled by writing a '1' to the Low Power Mode bit (LPMODE) in the Control A register (AC.CTRLA).

29.3.3 Events

The AC will generate the following Event automatically when the AC is enabled:

- Comparator output Event

29.3.4 Interrupts

Table 29-2. Available Interrupt Vectors and Sources

Offset	Name	Vector Description	Conditions
0x00	COMP0	Analog comparator interrupt	AC output is toggling as configured by INTMODE in AC.CTRLA

When an interrupt condition occurs, the corresponding Interrupt Flag is set in the Status register (AC.STATUS).

An interrupt source is enabled or disabled by writing to the corresponding bit in the peripheral's Interrupt Control register (AC.INTCTRL).

An interrupt request is generated when the corresponding interrupt source is enabled and the Interrupt Flag is set. The interrupt request remains active until the Interrupt Flag is cleared. See the AC.STATUS register description for details on how to clear Interrupt Flags.

29.3.5 Sleep Mode Operation

In Idle sleep mode the AC will continue to operate normal.

In Standby sleep mode, the AC is disabled by default. If the Run in Standby Sleep Mode bit (RUNSTDBY) in the Control A register (AC.CTRLA) is written to '1', the AC will continue to operate, but the Status register will not be updated, and no Interrupts are generated if not any other modules request the CLK_PER, but events and the pad output will be updated.

In Power Down sleep mode, the AC and the output to pad are disabled.

29.3.6 Configuration Change Protection

Not applicable.

29.4 Register Summary - AC

Offset	Name	Bit Pos.								
0x00	CTRLA	7:0	RUNSTDBY	OUTEN	INTMODE[1:0]		LPMODE	HYSMODE[1:0]		ENABLE
0x01	Reserved									
0x02	MUXCTRLA	7:0	INVERT				MUXPOS		MUXNEG[1:0]	
0x03 ... 0x05	Reserved									
0x06	INTCTRL	7:0								CMP
0x07	STATUS	7:0				STATE				CMP

29.5 Register Description

29.5.1 Control A

Name: CTRLA
Offset: 0x00
Reset: 0x00
Property: -

Bit	7	6	5	4	3	2	1	0
	RUNSTDBY	OUTEN	INTMODE[1:0]		LPMODE	HYSMODE[1:0]		ENABLE
Access	R/W	R/W	R/W	R/W	R/W	R/W	R/W	R/W
Reset	0	0	0	0	0	0	0	0

Bit 7 – RUNSTDBY Run in Standby Mode
Writing a '1' to this bit allows the AC to continue operation in Standby sleep mode. Since the clock is stopped, interrupts and status flags are not updated.

Value	Description
0	In Standby sleep mode, the peripheral is halted
1	In Standby sleep mode, the peripheral continues operation

Bit 6 – OUTEN Analog Comparator Output Pad Enable
Writing this bit to '1' makes the OUT signal available on the pin.

Bits 5:4 – INTMODE[1:0] Interrupt Modes
Writing to these bits selects what edge(s) of the AC output an interrupt request is triggered.

Value	Name	Description
0x0	BOTHEDGE	Both negative and positive edge
0x1	-	Reserved
0x2	NEGEDGE	Negative edge
0x3	POSEDGE	Positive edge

Bit 3 – LPMODE Low Power Mode
Writing a '1' to this bit reduces the current through the comparator. This reduces power consumption, but increases the reaction time of the AC.

Value	Description
0	Low Power Mode disabled
1	Low Power Mode enabled

Bits 2:1 – HYSMODE[1:0] Hysteresis Mode Select
Writing these bits selects the hysteresis mode for the AC input.

Value	Name	Description
0x0	OFF	OFF
0x1	10	±10mV
0x2	25	±25mV
0x3	50	±50mV

Bit 0 – ENABLE Enable AC
Writing this bit to '1' enables the AC.

29.5.2 Mux Control A

Name: MUXCTRLA
Offset: 0x02
Reset: 0x00
Property: -

AC.MUXCTRLA controls Analog Comparator Muxes

Bit	7	6	5	4	3	2	1	0
	INVERT				MUXPOS		MUXNEG[1:0]	
Access	R/W				R/W		R/W	R/W
Reset	0				0		0	0

Bit 7 – INVERT Invert AC Output
Writing a '1' to this bit enables inversion of the output of the AC. This effectively inverts the input to all the peripherals connected to the signal, and also affects the internal status signals.

Bit 3 – MUXPOS Positive Input MUX Selection
Writing to this bit field selects the input signal to the positive input of the AC.

Value	Name	Description
0	AINP0	Positive Pin 0
1	AINP1	Positive Pin 1

Bits 1:0 – MUXNEG[1:0] Negative Input MUX Selection
Writing to this bit field selects the input signal to the negative input of the AC.

Value	Name	Description
0x0	AINN0	Negative Pin 0
0x1	AINN1	Negative Pin 1
0x2	VREF	Voltage Reference
0x3	DAC	DAC output.

29.5.3 Interrupt Control

Name: INTCTRL
Offset: 0x06
Reset: 0x00
Property: -

Bit	7	6	5	4	3	2	1	0
								CMP
Access								R/W
Reset								0

Bit 0 – CMP Analog Comparator Interrupt Enable
Writing this bit to '1' enables Analog Comparator Interrupt.

29.5.4 Status

Name: STATUS
Offset: 0x07
Reset: 0x00
Property: -

Bit	7	6	5	4	3	2	1	0
				STATE				CMP
Access				R				R/W
Reset				0				0

Bit 4 – STATE Analog Comparator State
This shows current status of the OUT signal from the AC. This will have a synchronizer delay to get updated in the I/O register (3 cycles).

Bit 0 – CMP Analog Comparator Interrupt Flag
This is the interrupt flag for AC. Writing a '1' to this bit will clear the Interrupt flag.

30. ADC - Analog to Digital Converter

30.1 Features

- 10-bit resolution
- ±2 LSB absolute accuracy
- 6.5 - 260µs conversion time
- Up to 115ksps at 10-bit resolution (150ksps at 8-bit)
- Up to twelve multiplexed single-ended input channels
- Temperature sensor input channel
- 0V to V_{DD} ADC input voltage range
- Multiple internal ADC reference voltage between 0.55V and V_{DD}
- Free running or Single Conversion mode
- Interrupt available on ADC conversion complete
- Optional Event triggered conversion
- Optional interrupt on conversion results
- Compare function for accurate monitoring or user defined thresholds (window comparator mode)
- Accumulation up to 64 samples per conversion

30.2 Overview

The Analog-to-Digital Converter (ADC) peripheral features a 10-bit successive approximation ADC (SAR), with a sampling rate up to 115ksps at 10-bit resolution (150ksps at 8-bit). The ADC is connected to a 12-channel Analog Multiplexer which allows twelve single-ended voltage inputs. The single-ended voltage inputs refer to 0V (GND). The ADC input channel can either be internal (e.g. a voltage reference) or external through the analog input pins.

An ADC conversion can be started by software, or by using the Event System (EVSYS) to route an event from other peripherals. Making it possible to do periodic sampling of input signals, trigger an ADC conversion on a special condition, or triggering an ADC conversion in standby sleep mode. A window compare feature is available for monitoring the input signal, and can be configured to only trigger an interrupt on user defined thresholds for under, over, inside or outside a window, with minimum software intervention required.

The ADC input signal is fed through a sample-and-hold circuit which ensures that the input voltage to the ADC is held at a constant level during sampling.

The ADC supports sampling in bursts where a configurable number of conversion results are accumulated into a single ADC result (Sample Accumulation). Further, a sample delay can be configured to tune the ADC sampling frequency associated with a single burst. This is to tune the sampling frequency away from any harmonic noise aliased with the ADC sampling frequency (within the burst) from the sampled signal. An automatic sampling delay variation feature can be used to randomize this delay to slightly change the time between samples.

Internal reference voltages from Voltage Reference (VREF) or VDD are provided on-chip.

This device has one instance of the ADC peripheral, ADC0.

When the Peripheral Touch Controller (PTC) is enabled, ADC0 is fully controlled by the PTC peripheral.

30.2.1 Block Diagram

Figure 30-1. Block Diagram

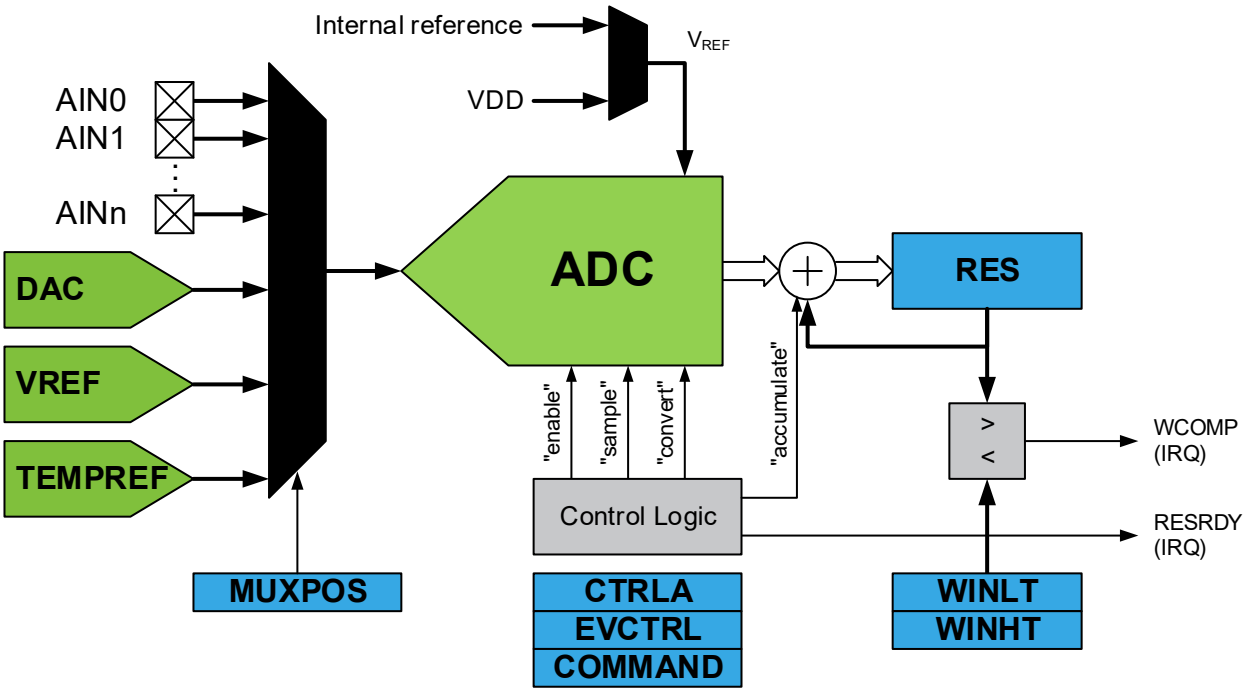

The analog input channel is selected by writing to the MUXPOS bits in the MUXPOS register (ADC.MUXPOS). Any of the ADC input pins, GND, internal Voltage Reference (VREF), or temperature sensor, can be selected as single ended input to the ADC. The ADC is enabled by writing a '1' to the ADC ENABLE bit in the Control A register (ADC.CTRLA). Voltage reference and input channel selections will not go into effect before the ADC is enabled. The ADC does not consume power when the ENABLE bit in ADC.CTRLA is zero.

The ADC generates a 10-bit result which can be read from the Result Register (ADC.RES). The result is presented right adjusted.

30.2.2 Signal Description

Pin Name	Type	Description
AIN[11:0]	Analog input	analog input to be converted

Related Links

2.1 Configuration Summary

5. I/O Multiplexing and Considerations

30.2.3 System Dependencies

In order to use this peripheral, other parts of the system must be configured correctly, as described below.

Table 30-1. ADC System Dependencies

Dependency	Applicable	Peripheral
Clocks	Yes	CLKCTRL
I/O Lines and Connections	Yes	PORT
Interrupts	Yes	CPUINT
Events	Yes	EVSYS
Debug	Yes	UPDI

30.2.3.1 Clocks

The ADC uses the peripheral clock CLK_PER, and has an internal prescaler to generate the ADC clock source CLK_ADC.

Related Links

10. CLKCTRL - Clock Controller

30.3.2.2 Clock generation

30.2.3.2 I/O Lines and Connections

The I/O-pins (AINx) are configured by the PORT - I/O Pin Controller.

The digital input buffer should be disabled on the pin used as input for the ADC to disconnect the digital domain from the analog domain to obtain the best possible ADC results. This is configured by the PORT - I/O Pin Controller.

Related Links

16. PORT - I/O Pin Configuration

30.2.3.3 Interrupts

Using the interrupts of this peripheral requires the Interrupt Controller to be configured first.

Related Links

13. CPUINT - CPU Interrupt Controller

8.7.3 SREG

30.3.4 Interrupts

30.2.3.4 Events

The events of this peripheral are connected to the Event System.

Related Links

14. EVSYS - Event System

30.2.3.5 Debug Operation

When run-time debugging, this peripheral will continue normal operation. Halting the CPU in debugging mode will halt normal operation of the peripheral.

This peripheral can be forced to operate with halted CPU by writing a '1' to the Debug Run bit (DBGRUN) in the Debug Control register of the peripheral (*peripheral*.DBGCTRL).

30.2.4 Definitions

An ideal n-bit single-ended ADC converts a voltage linearly between GND and VREF in 2^n steps (LSBs). The lowest code is read as 0, and the highest code is read as 2^{n-1}. Several parameters describe the deviation from the ideal behavior:

Offset Error	The deviation of the first transition (0x000 to 0x001) compared to the ideal transition (at 0.5 LSB). Ideal value: 0 LSB.

Figure 30-2. Offset Error

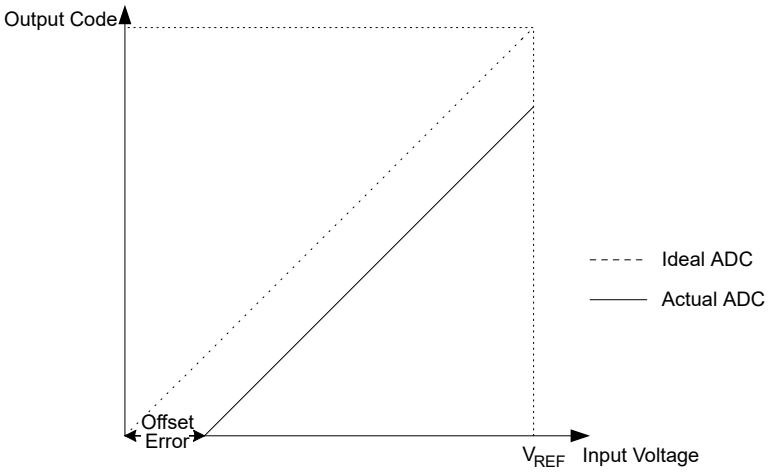

Gain Error

After adjusting for offset, the gain error is found as the deviation of the last transition (0x3FE to 0x3FF) compared to the ideal transition (at 1.5 LSB below maximum). Ideal value: 0 LSB.

Figure 30-3. Gain Error

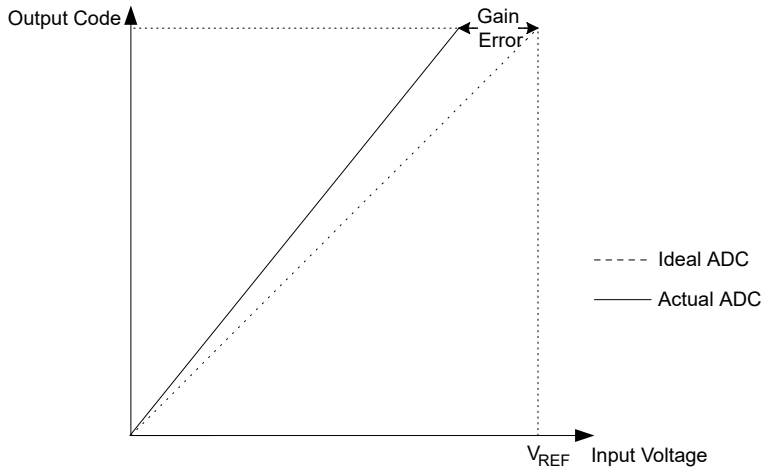

Integral Non-Linearity (INL)

After adjusting for offset and gain error, the INL is the maximum deviation of an actual transition compared to an ideal transition for any code. Ideal value: 0 LSB.

Figure 30-4. Integral Non-Linearity

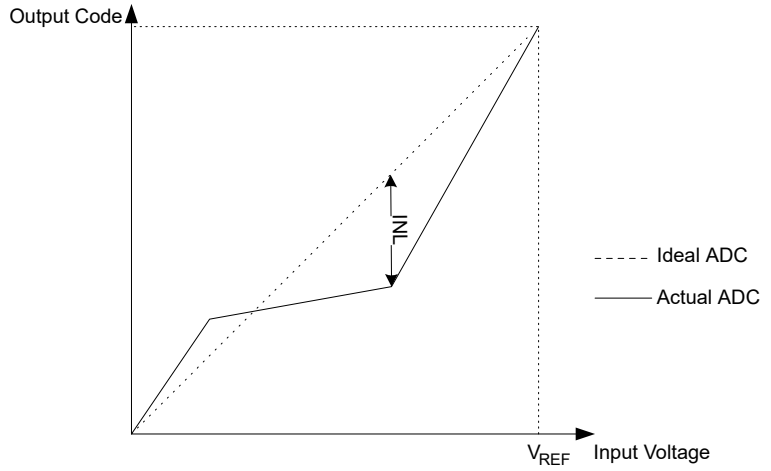

Differential Non-Linearity (DNL) The maximum deviation of the actual code width (the interval between two adjacent transitions) from the ideal code width (1 LSB). Ideal value: 0 LSB.

Figure 30-5. Differential Non-Linearity

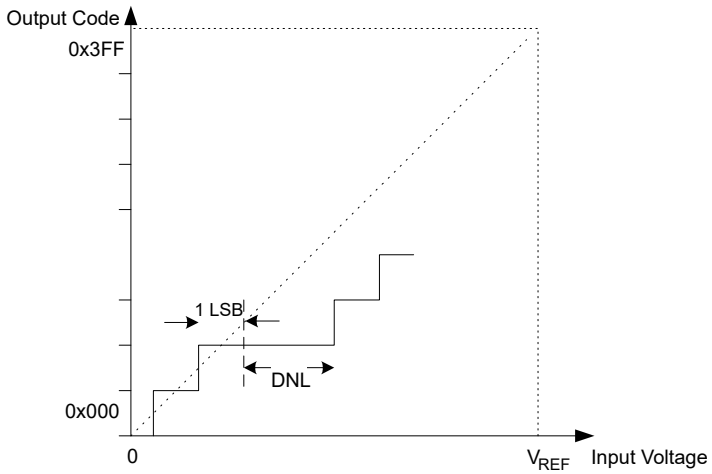

Quantization Error Due to the quantization of the input voltage into a finite number of codes, a range of input voltages (1 LSB wide) will code to the same value. Always ±0.5 LSB.

Absolute Accuracy The maximum deviation of an actual (unadjusted) transition compared to an ideal transition for any code. This is the compound effect of all aforementioned errors. Ideal value: ±0.5 LSB.

30.3 Functional Description

30.3.1 Initialization

The following steps are recommended in order to initialize ADC operation:

1. Configure the resolution by writing to the Resolution Selection bit (RESSEL) in the Control A register (ADC.CTRLA).
2. Optional: Enable the Free Running mode by writing a '1' to the Free Running bit (FREERUN) in ADC.CTRLA.
3. Optional: Configure the number of samples to be accumulated per conversion by writing the Sample Accumulation Number Select bits (SAMPNUM) in the Control B register (ADC.CTRLB).
4. Configure a voltage reference by writing to the Reference Selection bit (REFSEL) in the Control C register (ADC.CTRLC). Default is the internal Voltage Reference of the device (VREF, as configured there).
5. Configure the CLK_ADC by writing to the Prescaler bit field (PRESC) in the Control C register (ADC.CTRLC).
6. Configure an input by writing to the MUXPOS bit field in the MUXPOS register (ADC.MUXPOS).
7. Optional: Enable Start Event input by writing a '1' to the Start Event Input bit (STARTEI) in the Event Control register (ADC.EVCTRL). Configure the Event System accordingly.
8. Enable the ADC by writing a '1' to the ENABLE bit in ADC.CTRLA.

Following these steps will initialize the ADC for basic measurements, which can be triggered by an Event (if configured) or by writing a '1' to the Start Conversion bit (STCONV) in the Command register (ADC..COMMAND).

30.3.2 Operation

30.3.2.1 Starting a Conversion

Once the input channel is selected by writing to the MUXPOS register (ADC.MUXPOS), a conversion is triggered by writing a '1' to the ADC Start Conversion bit (STCONV) in the Command register (ADC.COMMAND). This bit is one as long as the conversion is in progress. In single conversion mode, STCONV is cleared by hardware when the conversion is completed.

If a different input channel is selected while a conversion is in progress, the ADC will finish the current conversion before changing the channel.

Depending on the Accumulator setting, the conversion result is from a single sensing operation, or from a sequence of accumulated samples. Once the triggered operation is finished, the Result Ready flag (RESRDY) in the Interrupt Flag register (ADC.INTFLAG) is set. And the corresponding interrupt vector is executed if the Result Ready Interrupt Enable bit (RESRDY) in the Interrupt Control register (ADC.INTCTRL) is one and the Global Interrupt Enable bit is one.

A single conversion can be started by writing a '1' to the STCONV bit in ADC.COMMAND. The STCONV bit can be used to determine if a conversion is in progress, the STCONV bit will be set during a conversion, and cleared once the conversion is complete.

The RESRDY interrupt flag in ADC.INTFLAG will be set even if the specific interrupt is disabled, allowing software to check for finished conversion by polling the flag. A conversion can thus be triggered without causing an interrupt.

Alternatively, a conversion can be triggered by an event, this is enabled by writing a '1' to the Start Event Input bit (STARTEI) in the Event Control register (ADC.EVCTRL). Any incoming event routed to the ADC thorugh the Event System (EVSYS) will trigger an ADC conversion. This provides a method to start conversions at predictable intervals or at specific conditions.

The event trigger input is edge sensitive, when an event occurs, STCONV in ADC.COMMAND is set. STCONV will be cleared when the conversion is complete.

In Free Running mode, the first conversion is started by writing the STCONV bit to '1' in ADC.COMMAND. A new conversion cycle is started immediately after the previous conversion cycle has completed. A conversion complete will set the RESRDY flag in ADC.INTFLAGS.

30.3.2.2 Clock generation

Figure 30-6. ADC Prescaler

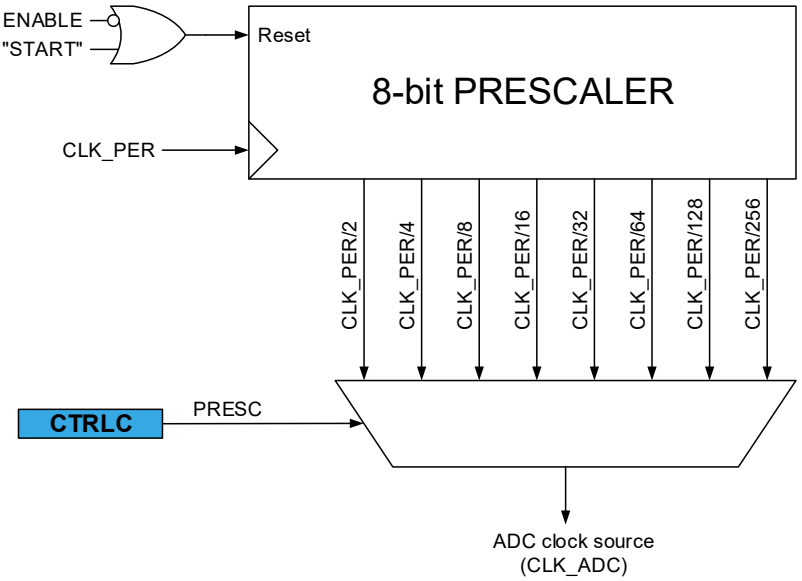

The ADC requires an input clock frequency between 50kHz and 1.5MHz for maximum resolution. If a lower resolution than 10 bits is selected, the input clock frequency to the ADC can be higher than 1.5MHz to get a higher sample rate.

The ADC module contains a prescaler which generates the ADC clock (CLK_ADC) from any CPU clock (CLK_PER) above 100kHz. The prescaling is selected by writing to the Prescaler bits (PRESC) in the Control C register (ADC.CTRLC). The prescaler starts counting from the moment the ADC is switched on by writing a '1' to the ENABLE bit in ADC.CTRLA. The prescaler keeps running as long as the ENABLE bit is one, the prescaler counter is reset to zero when the ENABLE bit is zero.

When initiating a conversion by writing a '1' to the Start Conversion bit (STCONV) in the Command register (ADC.COMMAND) or from event, the conversion starts at the following rising edge of the CLK_ADC clock cycle. The prescaler is kept reset as long as there is no ongoing conversion. This assures a fixed delay from the trigger to the actual start of a conversion in CLK_PER cycles as:

$$\text{StartDelay} = \frac{\text{PRESC}_{\text{factor}}}{2} + 2$$

Figure 30-7. Start conversion and clock generation

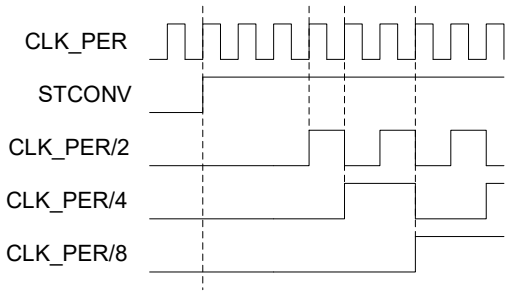

30.3.2.3 Conversion timing

A normal conversion takes 13 CLK_ADC cycles. The actual sample-and-hold takes place 2 CLK_ADC cycles after the start of a conversion. Start of conversion is initiated by writing a '1' to the STCONV bit in ADC.COMMAND. When a conversion is complete, the result is available in the Result register (ADC.RES), and the Result Ready interrupt flag is set (RESRDY in ADC.INTFLAG). The interrupt flag will be cleared when the result is read from the Result registers, or by writing a '1' to the RESRDY bit in ADC.INTFLAG.

Figure 30-8. ADC Timing Diagram - Single Conversion

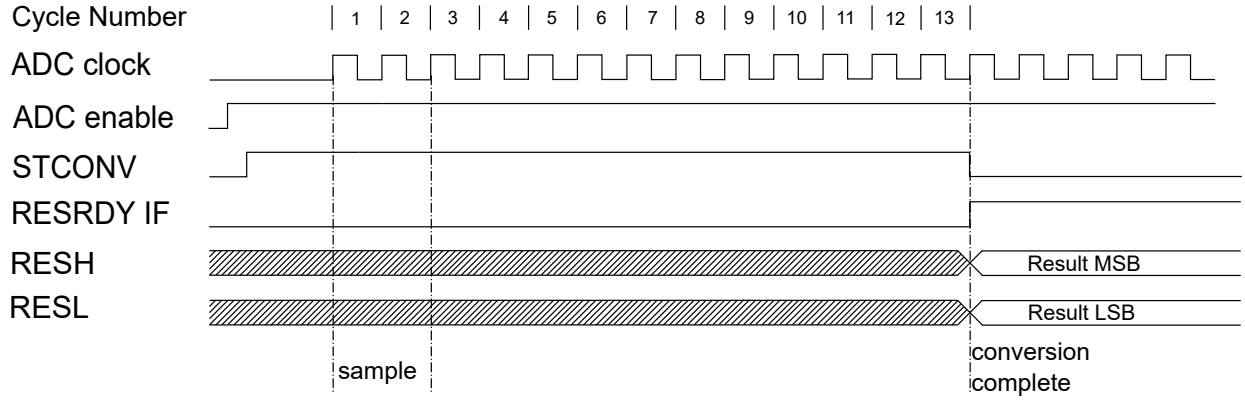

Both sampling time and sampling length can be adjusted using Sample Delay bit field in Control D (ADC.CTRLD) and sampling Sample Length bit field in the Sample Control register (ADC.SAMPCTRL). Both of these control the ADC sampling time in number of CLK_ADC cycles. This allows sampling high-impedance sources without relaxing conversion speed. See register description for further information. Total sampling time is given by:

$$\text{SampleTime} = \frac{(2 + \text{SAMPDLY} + \text{SAMPLEN})}{f_{\text{CLK_ADC}}}$$

Figure 30-9. ADC timing Diagram - Single conversion with delays

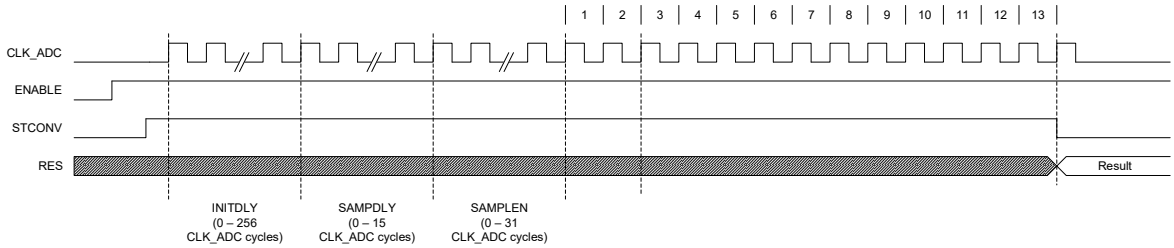

In Free Running mode, a new conversion will be started immediately after the conversion completes, while the STCONV bit is one. The sampling rate R_S in free running mode is calculated by

$$R_S = \frac{f_{\text{CLK_ADC}}}{(13 + \text{SAMPDLY} + \text{SAMPLEN})}$$

Figure 30-10. ADC Timing Diagram - Free Running Conversion

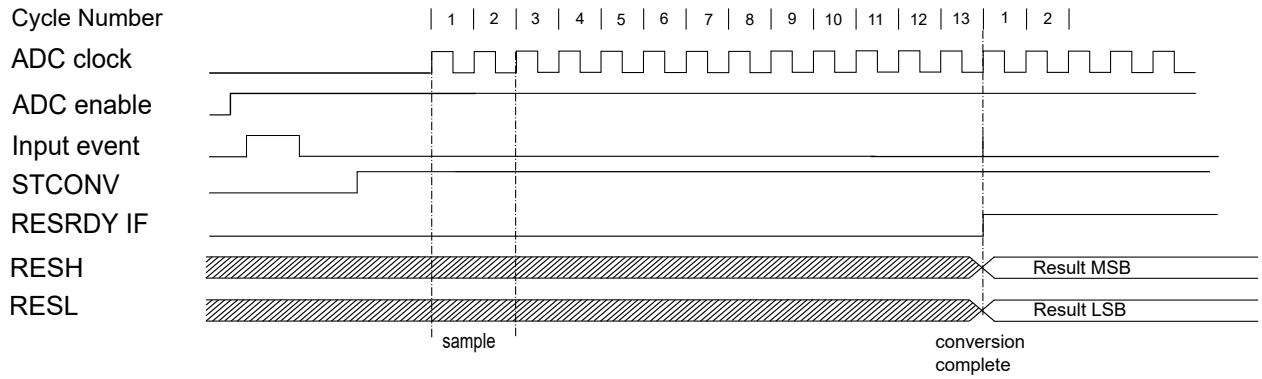

30.3.2.4 Changing Channel or Reference Selection

The MUXPOS bits the ADC.MUXPOS register and the REFSEL bits in the ADC.CTRLC register are buffered through a temporary register to which the CPU has random access. This ensures that the channel and reference selections only take place at a safe point during the conversion. The channel and reference selections are continuously updated until a conversion is started.

Once the conversion starts, the channel and reference selections are locked to ensure sufficient sampling time for the ADC. Continuous updating resumes in the last CLK_ADC clock cycle before the conversion completes (RESRDY in ADC.INTFLAGS is set). The conversion starts on the following rising CLK_ADC clock edge after the STCONV bit is written to '1'.

30.3.2.4.1 ADC Input Channels

When changing channel selection, the user should observe the following guidelines to ensure that the correct channel is selected:

In Single Conversion mode: The channel should be selected before starting the conversion. The channel selection may be changed one ADC clock cycle after writing '1' to the STCONV bit.

In Free Running mode: The channel should be select before starting the first conversion. The channel selection may be changed one ADC clock cycle after writing '1' to the STCONV bit. Since the next conversion has already started automatically, the next result will reflect the previous channel selection. Subsequent conversions will reflect the new channel selection.

After switching the input channel the ADC requires a settling time, please refer to the electrical characteristics section for details.

Related Links

34. Electrical Characteristics

30.3.2.4.2 ADC Voltage Reference

The reference voltage for the ADC (V_{REF}) controls the conversion range of the ADC. Input voltages that exceed the selected V_{REF} will be converted to the maximum result value of the ADC, for an ideal 10-bit ADC this is 0x3FF. V_{REF} can be selected by writing the Reference Selection bits (REFSEL) in the Control C register (ADC.CTRLC) as either V_{DD} or an internal reference. V_{DD} is connected to the ADC through a passive switch.

When using ADCnREFSEL[0:2] in the corresponding VREF.CTRLn register should be configured to the selection closest, but above applied reference voltage. For external references higher than 4.3V, use ADCnREFSEL[0:2] = 0x3

The internal reference is generated from an internal bandgap reference through an internal amplifier, controlled by the Voltage Reference (VREF) peripheral.

Related Links

18. VREF - Voltage Reference

30.3.2.4.3 Analog Input Circuitry

The analog input circuitry is illustrated in the Figure below. An analog source applied to ADCn is subjected to the pin capacitance and input leakage of that pin (represented by I_H and I_L), regardless of whether that channel is selected

as input for the ADC. When the channel is selected, the source must drive the S/H capacitor through the series resistance (combined resistance in the input path).

The ADC is optimized for analog signals with an output impedance of approximately 10kΩ or less. If such a source is used, the sampling time will be negligible. If a source with higher impedance is used, the sampling time will depend on how long the source needs to charge the S/H capacitor, which can vary substantially.

Figure 30-11. Analog Input Schematic

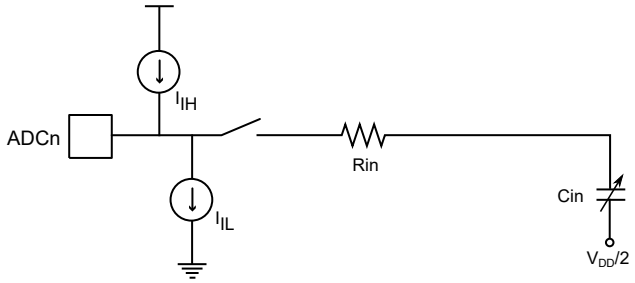

30.3.2.5 ADC Conversion Result

After the conversion is complete (RESRDY is set), the conversion result RES is available in the ADC Result Register (ADC.RES). The result for a 10-bit conversion is given as:

$$\mathrm{RES} = \frac{1023 \times V_{\mathrm{IN}}}{V_{\mathrm{REF}}}$$

where V_{IN} is the voltage on the selected input pin and V_{REF} the selected voltage reference (see description for REFSEL in ADC.CTRLC and ADC.MUXPOS).

30.3.2.6 Temperature Measurement

The temperature measurement is based on an on-chip temperature sensor. For a temperature measurement, follow these steps:

1. Configure the internal voltage reference to 1.1V: in VREF.CTRLA, write ADC0REFSEL=0x1.
2. Select the internal voltage reference by writing the REFSEL bits in ADC.CTRLC to 0x0.
3. Select the ADC Temperature sensor channel by writing the MUXPOS bits in the MUXPOS register (ADC.MUXPOS) to 0x1E. This enables the temperature sensor.
4. In ADC.CTRLD Select $\mathrm{INITDLY} \geq 32\mu\mathrm{s} \times f_{\mathrm{CLK_ADC}}$
5. In ADC.SAMPCTRL Select $\mathrm{SAMPLEN} \geq 32\mu\mathrm{s} \times f_{\mathrm{CLK_ADC}}$
6. In ADC.CTRLC Select $\mathrm{SAMPCAP} = 5\mathrm{pF}$
7. Acquire the temperature sensor output voltage by starting a conversion.
8. Process the measurement result as described below.

The measured voltage has a linear relationship to the temperature. Due to process variations, the temperature sensor output voltage varies between individual devices at the same temperature. The individual compensation factors are determined during the production test and saved in the Signature Row:

- SIGROW.TEMPSENSE0 is an gain/slope correction
- SIGROW.TEMPSENSE1 is a offset correction

In order to achieve accurate results, the result of the temperature sensor measurement must be processed in the application software using factory calibration values. The temperature (in Kelvin) is calculated by this rule:

```
Temp = (((RESH << 8) | RESL) - TEMPSENSE1) * TEMPSENSE0) >> 8
```

RESH and RESL are the high and low byte of the Result register (ADC.RES), and TEMPSENSEn are the respective values from the Signature row.

It is recommended to follow these steps in user code:

```
int8_t sigrow_offset = SIGROW.TEMPSENSE1;  // Read signed value from signature row
uint8_t sigrow_gain = SIGROW.TEMPSENSE0;    // Read unsigned value from signature row
uint16_t adc_reading = 0;   // ADC conversion result with 1.1 V internal reference
```

```
uint32_t temp = adc_reading - sigrow_offset;
temp *= sigrow_gain;  // Result might overflow 16 bit variable (10bit+8bit)
temp += 0x80;              // Add 1/2 to get correct rounding on division below
temp >>= 8;                // Divide result to get Kelvin
uint16_t temperature_in_K = temp;
```

Related Links

6.9.2.3 TEMPSENSEn

30.3.2.7 Window Comparator Mode

The ADC can raise the WCOMP flag in the Interrupt and Flag register (ADC.INTFLAG) and request an interrupt (WCOMP) when the result of a conversion is above and/or below certain thresholds. The available modes are:

- The result is under a threshold
- The result is over a threshold
- The result is inside a window (above a lower threshold, but below the upper one)
- The result is outside a window (either under the lower or above the upper threshold)

The thresholds are defined by writing to the Window Comparator Threshold registers (ADC.WINLT and ADC.WINHT). Writing to the Window Comparator Mode bit field (WINCM) in the Control E register (ADC.CTRLE) selects the conditions when the flag is raised and/or the interrupt is requested.

Assuming the ADC is already configured to run, follow these steps to use the Window Comparator Mode:

1. Choose which Window Comparator to use (see WINCM description in ADC.CTRLE), and set the required threshold(s) by writing to ADC.WINLT and/or ADC.WINHT.
2. Optional: enable the interrupt request by writing a '1' to the Window Comparator Interrupt Enable bit (WCOMP) in the Interrupt Control register (ADC.INTCTRL)
3. Enable the Window Comparator and select a mode by writing a non-zero value to the WINCM bit field in ADC.CTRLE.

When accumulating multiple samples, the comparison between the result and the threshold will happen after the last sample was acquired. Consequently, the flag is only raised once, after taking the last sample of the accumulation.

30.3.2.8 PTC Operation

When the Peripheral Touch Controller (PTC) is enabled, it takes complete control of ADC0.

When the PTC is disabled, ADC0 is available as a normal ADC.

Refer to the QTouch Library user guide for more details on using the PTC.

Related Links

32.3 Functional Description

30.3.3 Events

An ADC conversion can be triggered automatically by an event input if the Start Event Input bit (STARTEI) in the Event Control register (ADC.EVCTRL) is written to '1'.

See also the description of the Asynchronous User Channel n Input Selection in the Event System (EVSYS.ASYNCUSERn).

Related Links

14.5.5 ASYNCUSER

30.3.4 Interrupts

Table 30-2. Available Interrupt Vectors and Sources

Offset	Name	Vector Description	Conditions
0x00	RESRDY	Result Ready interrupt	The conversion result is available in the Result register (ADC.RES).
0x02	WCOMP	Window Comparator interrupt	As defined by WINCM in ADC.CTRLE.

When an interrupt condition occurs, the corresponding Interrupt Flag is set in the Interrupt Flags register of the peripheral (*peripheral*.INTFLAGS).

An interrupt source is enabled or disabled by writing to the corresponding enable bit in the peripheral's Interrupt Control register (*peripheral*.INTCTRL).

An interrupt request is generated when the corresponding interrupt source is enabled and the Interrupt Flag is set. The interrupt request remains active until the Interrupt Flag is cleared. See the peripheral's INTFLAGS register for details on how to clear Interrupt Flags.

30.3.5 Sleep Mode Operation

The ADC is by default disabled In *Standby sleep mode*.

The ADC can stay fully operational in Standby sleep mode if the Run in Standby bit (RUNSTDBY) in the Control A register (ADC.CTRLA) is written to '1'.

When the device is entering Standby sleep mode when RUNSTDBY is one, the ADC will stay active, hence any ongoing conversions will be completed, and interrupts will be executed as configured.

In Standby sleep mode an ADC conversion must be triggered via the Event System (EVSYS), or the ADC must be in free-running mode with the first conversion triggered by software before entering sleep. The peripheral clock is requested if needed and is turned off after the conversion is completed.

When an input Event trigger occurs, the positive edge will be detected, the Start Conversion bit (STCONV) in the Command register (ADC.COMMAND) set, and the conversion will start. When the conversion is completed, the Result Ready Flag (RESRDY) in the Interrupt Flags register (ADC.INTFLAGS) is set and the STCONV bit in ADC.COMMAND is cleared.

The reference source and supply infrastructure need time to stabilize when activated in Standby sleep mode. Configure a delay for the start of the first conversion by writing a non-zero value to the Initial Delay bits (INITDLY) in the Control D register (ADC.CTRLD).

In *Power Down sleep mode*, no conversions are possible. Any ongoing conversions are halted and will be resumed when going out of sleep. At end of conversion, the Result Ready Flag (RESRDY) will be set, but the content of the result registers (ADC.RES) is invalid since the ADC was halted in the middle of a conversion.

Related Links

11. SLPCTRL - Sleep Controller

30.3.6 Synchronization

Not applicable.

30.3.7 Configuration Change Protection

Not applicable.

30.4 Register Summary - ADC

Offset	Name	Bit Pos.								
0x00	CTRLA	7:0	RUNSTBY					RESSEL	FREERUN	ENABLE
0x01	CTRLB	7:0						SAMPNUM[2:0]		
0x02	CTRLC	7:0		SAMPCAP	REFSEL[1:0]			PRESC[2:0]		
0x03	CTRLD	7:0	INITDLY[2:0]			ASDV	SAMPDLY[3:0]			
0x04	CTRLE	7:0						WINCM[2:0]		
0x05	SAMPCTRL	7:0				SAMPLEN[4:0]				
0x06	MUXPOS	7:0				MUXPOS[4:0]				
0x07	Reserved									
0x08	COMMAND	7:0								STCONV
0x09	EVCTRL	7:0								STARTEI
0x0A	INTCTRL	7:0							WCOMP	RESRDY
0x0B	INTFLAGS	7:0							WCOMP	RESRDY
0x0C	DBGCTRL	7:0								DBGRUN
0x0D	TEMP	7:0	TEMP[7:0]							
0x0E ... 0x0F	Reserved									
0x10	RES	7:0	RES[7:0]							
		15:8	RES[15:8]							
0x12	WINLT	7:0	WINLT[7:0]							
		15:8	WINLT[15:8]							
0x14	WINHT	7:0	WINHT[7:0]							
		15:8	WINHT[15:8]							
0x16	CALIB	7:0								DUTYCYC

30.5 Register Description

30.5.1 Control A

Name: CTRLA
Offset: 0x00
Reset: 0x00
Property: -

Bit	7	6	5	4	3	2	1	0
	RUNSTBY					RESSEL	FREERUN	ENABLE
Access	R/W	R	R	R	R	R/W	R/W	R/W
Reset	0	0	0	0	0	0	0	0

Bit 7 – RUNSTBY Run in Standby
This bit determines whether the ADC needs to run when the chip is in standby sleep mode.

Bit 2 – RESSEL Resolution Selection
This bit selects the ADC resolution.

Value	Description
0	Full 10-bit resolution. The 10-bit ADC results are accumulated or stored to the ADC Result register (ADC.RES).
1	8-bit resolution. The conversion results are truncated to 8 bits (MSBs) before they are accumulated or stored to the ADC Result register (ADC.RES). The two least significant bits are discarded.

Bit 1 – FREERUN Free Running
Writing a '1' to this bit will enable Free Running mode for the data acquisition. The first conversion is started by writing COMMAND.STCONV bit high. In Free running mode, a new conversion cycle is started immediately after or as soon as the previous conversion cycle has completed. This is signaled by INTFLAGS.RESRDY.

Bit 0 – ENABLE ADC Enable

Value	Description
0	ADC is disabled.
1	ADC is enabled.

30.5.2 Control B

Name: CTRLB
Offset: 0x01
Reset: 0x00
Property: -

Bit	7	6	5	4	3	2	1	0
						SAMPNUM[2:0]		
Access	R	R	R	R	R	R/W	R/W	R/W
Reset	0	0	0	0	0	0	0	0

Bits 2:0 – SAMPNUM[2:0] Sample Accumulation Number Select
These bits select how many consecutive ADC sampling results are accumulated automatically. When this bit is written to a value greater than 0x0, the according number of consecutive ADC sampling results are accumulated into the ADC Result register (RES) in one complete conversion.

Value	Name	Description
0x0	NONE	No accumulation.
0x1	ACC2	2 results accumulated.
0x2	ACC4	4 results accumulated.
0x3	ACC8	8 results accumulated.
0x4	ACC16	16 results accumulated.
0x5	ACC32	32 results accumulated.
0x6	ACC64	64 results accumulated.
0x7	-	Reserved.

30.5.3 Control C

Name: CTRLC
Offset: 0x02
Reset: 0x00
Property: -

Bit	7	6	5	4	3	2	1	0
		SAMPCAP	REFSEL[1:0]			PRESC[2:0]		
Access	R	R/W	R/W	R/W	R	R/W	R/W	R/W
Reset	0	0	0	0	0	0	0	0

Bit 6 – SAMPCAP Sample Capacitance Selection
This bit selects the sample capacitance, and hence, the input impedance. The best value is dependent on the reference voltage and the application's electrical properties.

Value	Description
0	Recommended for reference voltage values below 1V.
1	Reduced size of sampling capacitance. Recommended for higher reference voltages.

Bits 5:4 – REFSEL[1:0] Reference Selection
These bits selects the voltage reference for the ADC.

Value	Name	Description
0x0	INTERNAL	Internal reference
0x1	VDD	V_{DD}
Other	-	Reserved.

Bits 2:0 – PRESC[2:0] Prescaler
These bits defines the division factor from peripheral clock (CLK_PER) to the ADC clock (CLK_ADC).

Value	Name	Description
0x0	DIV2	CLK_PER divided by 2
0x1	DIV4	CLK_PER divided by 4
0x2	DIV8	CLK_PER divided by 8
0x3	DIV16	CLK_PER divided by 16
0x4	DIV32	CLK_PER divided by 32
0x5	DIV64	CLK_PER divided by 64
0x6	DIV128	CLK_PER divided by 128
0x7	DIV256	CLK_PER divided by 256

30.5.4 Control D

Name: CTRLD
Offset: 0x03
Reset: 0x00
Property: -

Bit	7	6	5	4	3	2	1	0
	INITDLY[2:0]			ASDV	SAMPDLY[3:0]			
Access	R/W	R/W	R/W	R/W	R/W	R/W	R/W	R/W
Reset	0	0	0	0	0	0	0	0

Bits 7:5 – INITDLY[2:0] Initialization Delay
These bits defines the initialization/startup delay before the first sample when enabling the ADC or changing to internal reference voltage. Setting this delay will ensure that the reference, muxes, etc are ready before starting the first conversion. The initialization delay will also take place when waking up from deep sleep to do a measurement. The delay is expressed as a number of CLK_ADC cycles.

Value	Name	Description
0x0	DLY0	Delay 0 CLK_ADC cycles.
0x1	DLY16	Delay 16 CLK_ADC cycles.
0x2	DLY32	Delay 32 CLK_ADC cycles.
0x3	DLY64	Delay 64 CLK_ADC cycles.
0x4	DLY128	Delay 128 CLK_ADC cycles.
0x5	DLY256	Delay 256 CLK_ADC cycles.
Other	-	Reserved

Bit 4 – ASDV Automatic Sampling Delay Variation
Writing this bit to '1' enables automatic sampling delay variation between ADC conversions. The purpose of varying sampling instant is to randomize the sampling instant and thus avoid standing frequency components in frequency spectrum. The value of the SAMPDLY bits is automatically incremented by one after each sample.
When the Automatic Sampling Delay Variation is enabled and the SAMPDLY value reaches 0xF, it wraps around to 0x0.

Value	Name	Description
0	ASVOFF	The Automatic Sampling Delay Variation is disabled.
1	ASVON	The Automatic Sampling Delay Variation is enabled.

Bits 3:0 – SAMPDLY[3:0] Sampling Delay Selection
These bits define the delay between consecutive ADC samples. The programmable Sampling Delay allows modifying the sampling frequency during hardware accumulation, to suppress periodic noise sources that may otherwise disturb the sampling. The SAMPDLY field can be also modified automatically from sampling cycle to another, by setting the ASDV bit. The delay is expressed as CLK_ADC cycles and is given directly by the bitfield setting. The sampling cap is kept open during the delay.

30.5.5 Control E

Name: CTRLE
Offset: 0x4
Reset: 0x00
Property: -

Bit	7	6	5	4	3	2	1	0
						WINCM[2:0]		
Access	R	R	R	R	R	R/W	R/W	R/W
Reset	0	0	0	0	0	0	0	0

Bits 2:0 – WINCM[2:0] Window Comparator Mode
This field enable and define when the interrupt flag is set in Window Comparator mode. RESULT is the 16-bit accumulator result. WINLT and WINHT are 16-bit lower threshold value and 16-bit higher threshold value, respectively.

Value	Name	Description
0x0	NONE	No Window Comparison (default)
0x1	BELOW	*RESULT < WINLT*
0x2	ABOVE	*RESULT > WINHT*
0x3	INSIDE	*WINLT < RESULT < WINHT*
0x4	OUTSIDE	*RESULT < WINLT or RESULT >WINHT)*
Other	-	Reserved

30.5.6 Sample Control

Name: SAMPCTRL
Offset: 0x5
Reset: 0x00
Property: -

Bit	7	6	5	4	3	2	1	0
				SAMPLEN[4:0]				
Access	R	R	R	R/W	R/W	R/W	R/W	R/W
Reset	0	0	0	0	0	0	0	0

Bits 4:0 – SAMPLEN[4:0] Sample Length
These bits extend the ADC sampling length in number of CLK_ADC cycles. By default the sampling time is two CLK_ADC cycles. Increasing the sampling length allows sampling sources with higher impedance. The total conversion time increased with the selected sampling length.

30.5.7 MUXPOS

Name: MUXPOS
Offset: 0x06
Reset: 0x00
Property: -

Bit	7	6	5	4	3	2	1	0
				MUXPOS[4:0]				
Access	R	R	R	R/W	R/W	R/W	R/W	R/W
Reset	0	0	0	0	0	0	0	0

Bits 4:0 – MUXPOS[4:0] MUXPOS
This bit field selects which single-ended analog input is connected to the ADC. If these bits are changed during a conversion, the change will not take effect until this conversion is complete.

Value	Name	Description
0x00	AIN0	ADC input pin 0
0x01	AIN1	ADC input pin 1
0x02	AIN2	ADC input pin 2
0x03	AIN3	ADC input pin 3
0x04	AIN4	ADC input pin 4
0x05	AIN5	ADC input pin 5
0x06	AIN6	ADC input pin 6
0x07	AIN7	ADC input pin 7
0x08	AIN8	ADC input pin 8
0x09	AIN9	ADC input pin 9
0x0A	AIN10	ADC input pin 10
0x0B	AIN11	ADC input pin 11
0x1C	DAC0	DAC0
0x1D	INTREF	Internal reference (from VREF peripheral)
0x1F	GND	0V (GND)
Other	-	Reserved

30.5.8 Command

Name: COMMAND
Offset: 0x08
Reset: 0x00
Property: -

Bit	7	6	5	4	3	2	1	0
								STCONV
Access	R	R	R	R	R	R	R	R/W
Reset	0	0	0	0	0	0	0	0

Bit 0 – STCONV Start Conversion
Writing a '1' to this bit will start a single measurement. If in free running mode this will start the first conversion. STCONV will read as '1' as long as a conversion is in progress. When the conversion is complete, this bit is automatically cleared.
Writing the bit to '0' during an ongoing conversion will stop the conversion.

30.5.9 Event Control

Name: EVCTRL
Offset: 0x09
Reset: 0x00
Property: -

Bit	7	6	5	4	3	2	1	0
								STARTEI
Access	R	R	R	R	R	R	R	R/W
Reset	0	0	0	0	0	0	0	0

Bit 0 – STARTEI Start Event Input
This bit enables event input as source for conversion start.

30.5.10 Interrupt Control

Name: INTCTRL
Offset: 0x0A
Reset: 0x00
Property: -

Bit	7	6	5	4	3	2	1	0
							WCOMP	RESRDY
Access	R	R	R	R	R	R	R/W	R/W
Reset	0	0	0	0	0	0	0	0

Bit 1 – WCOMP Window Comparator Interrupt Enable
Writing a '1' to this bit enables window comparator interrupt.

Bit 0 – RESRDY Result Ready Interrupt Enable
Writing a '1' to this bit enables result ready interrupt.

30.5.11 Interrupt Flags

Name: INTFLAGS
Offset: 0x0B
Reset: 0x00
Property: -

Bit	7	6	5	4	3	2	1	0
							WCOMP	RESRDY
Access	R	R	R	R	R	R	R/W	R/W
Reset	0	0	0	0	0	0	0	0

Bit 1 – WCOMP Window Comparator Interrupt Flag
This window comparator flag is set when the measurement is complete and if the result match the selected window comparator mode defined by WINCM (ADCn.CTRLE). The comparison is done at end of conversion. The flag is cleared by either writing a '1' to the bit position or by reading the result register (ADCn.RES). Writing a '0' to this bit has no effect.

Bit 0 – RESRDY Result Ready Interrupt Flag
The result ready interrupt flag is set when a measurement is complete and a new result is ready. The flag is cleared by either writing a '1' to the bit location or by reading the result register (ADCn.RES). Writing a '0' to this bit has no effect.

30.5.12 Debug Run

Name: DBGCTRL
Offset: 0x0C
Reset: 0x00
Property: -

Bit	7	6	5	4	3	2	1	0
								DBGRUN
Access								R/W
Reset								0

Bit 0 – DBGRUN Debug Run

Value	Description
0	The peripheral is halted in break debug mode and ignores events.
1	The peripheral will continue to run in break debug mode when the CPU is halted.

30.5.13 Temporary

Name: TEMP
Offset: 0x0D
Reset: 0x00
Property: -

The Temporary register is used by the CPU for single-cycle, 16-bit access to the 16-bit registers of this peripheral. It can also be read and written by software. See also 8.5.6 Accessing 16-bit Registers. There is one common Temporary register for all the 16-bit registers of this peripheral.

Bit	7	6	5	4	3	2	1	0
	TEMP[7:0]							
Access	R/W	R/W	R/W	R/W	R/W	R/W	R/W	R/W
Reset	0	0	0	0	0	0	0	0

Bits 7:0 – TEMP[7:0] Temporary
Temporary register for read/write operations in 16-bit registers.

30.5.14 Result

Name: RES
Offset: 0x10
Reset: 0x00
Property: -

The RESL and RESH register pair represents the 16-bit value, RES. The low byte [7:0] (suffix L) is accessible at the original offset. The high byte [15:8] (suffix H) can be accessed at offset + 0x01. For more details on reading and writing 16-bit registers, refer to 8.5.6 Accessing 16-bit Registers.

If the analog input is higher than the reference level of the ADC, the 10 bit ADC result will be equal the max value of 0x3FF. Likewise, if the input is below 0V, the ADC result will be 0x000. As the ADC cannot produce a result above 0x3FF values, the accumulated value will never exceed 0xFFC0 even after maximum allowed 64 accumulations.

Bit	15	14	13	12	11	10	9	8
	RES[15:8]							
Access	R	R	R	R	R	R	R	R
Reset	0	0	0	0	0	0	0	0

Bit	7	6	5	4	3	2	1	0
	RES[7:0]							
Access	R	R	R	R	R	R	R	R
Reset	0	0	0	0	0	0	0	0

Bits 15:8 – RES[15:8] Result high byte
These bits constitute the MSB of RES register, where the msb is RES[15]. The ADC itself has 10-bit output, ADC[9:0], where the msb is ADC[9]. The data format in ADC and Digital Accumulation is 1's complement, where 0x0000 represents the zero and 0xFFFF represent the largest number (full scale).

Bits 7:0 – RES[7:0] Result low byte
These bits constitute the LSB of ADC/Accumulator Result, (RES) register. The data format in ADC and Digital Accumulation is 1's complement, where 0x0000 represents the zero and 0xFFFF represent the largest number (full scale).

30.5.15 Window Comparator Low Threshold

Name: WINLT
Offset: 0x12
Reset: 0x00
Property: -

This register is the 16-bit Low Threshold for the digital comparator monitoring the RES register. The ADC itself has 10-bit output, RES[9:0], where the msb is RES[9]. The data format in ADC and Digital Accumulation is one's complement, where 0x0000 represents the zero and 0xFFFF represent the largest number (full scale).

The WINLTH and WINLTL register pair represent the 16-bit value, WINLT. The low byte [7:0] (suffix L) is accessible at the original offset. The high byte [15:8] (suffix H) can be accessed at offset + 0x01. For more details on reading and writing 16-bit registers, refer to 8.5.6 Accessing 16-bit Registers.

When accumulating samples, the window comparator thresholds are applied on the accumulated value and not on each sample.

Bit	15	14	13	12	11	10	9	8
	WINLT[15:8]							
Access	R/W	R/W	R/W	R/W	R/W	R/W	R/W	R/W
Reset	0	0	0	0	0	0	0	0

Bit	7	6	5	4	3	2	1	0
	WINLT[7:0]							
Access	R/W	R/W	R/W	R/W	R/W	R/W	R/W	R/W
Reset	0	0	0	0	0	0	0	0

Bits 15:8 – WINLT[15:8] Window Comparator Low Threshold high byte
These bits hold the MSB of the 16-bit register.

Bits 7:0 – WINLT[7:0] Window Comparator Low Threshold low byte
These bits hold the LSB of the 16-bit register.

30.5.16 Window Comparator High Threshold

Name: WINHT
Offset: 0x14
Reset: 0x00
Property: -

This register is the 16-bit High Threshold for the digital comparator monitoring the RES register. The ADC itself has 10-bit output, RES[9:0], where the msb is RES[9]. The data format in ADC and Digital Accumulation is one's complement, where 0x0000 represents the zero and 0xFFFF represent the largest number (full scale).

The WINHTH and WINHTL register pair represent the 16-bit value, WINHT. The low byte [7:0] (suffix L) is accessible at the original offset. The high byte [15:8] (suffix H) can be accessed at offset + 0x01. For more details on reading and writing 16-bit registers, refer to 8.5.6 Accessing 16-bit Registers.

Bit	15	14	13	12	11	10	9	8
	WINHT[15:8]							
Access	R/W	R/W	R/W	R/W	R/W	R/W	R/W	R/W
Reset	0	0	0	0	0	0	0	0

Bit	7	6	5	4	3	2	1	0
	WINHT[7:0]							
Access	R/W	R/W	R/W	R/W	R/W	R/W	R/W	R/W
Reset	0	0	0	0	0	0	0	0

Bits 15:8 – WINHT[15:8] Window Comparator High Threshold high byte
These bits hold the MSB of the 16-bit register.

Bits 7:0 – WINHT[7:0] Window Comparator High Threshold low byte
These bits hold the LSB of the 16-bit register.

30.5.17 Calibration

Name: CALIB
Offset: 0x16
Reset: 0x01
Property: -

Bit	7	6	5	4	3	2	1	0
								DUTYCYC
Access								R/W
Reset								1

Bit 0 – DUTYCYC Duty Cycle
This bit determines the duty cycle of the ADC clock.
ADC_{clk} > 1.5 MHz requires a minimum operating voltage of 2.7V

Value	Description
0	50% Duty Cycle must be used if ADC_{clk} > 1.5 MHz
1	25% Duty Cycle (high 25% and low 75%) must be used for ADC_{clk} ≤ 1.5 MHz

31. DAC - Digital to Analog Converter

31.1 Features

- 8-bit resolution
- Up to 350ksps conversion rate
- High drive capabilities
- Functioning as input to Analog Comparator (AC) or ADC
- One instances DAC0

31.2 Overview

The Digital-to-Analog Converter (DAC) converts a digital value written to the Data register (DAC.DATA) to an analogue voltage. The conversion range is between GND and the selected reference voltage.

The DAC features an 8-bit Resistor String type DAC, capable of converting 350,000 samples per second (350ksps). The DAC uses the internal Voltage Reference (VREF) as upper limit for conversion. The DAC has one continuous time output with high drive capabilities, which is able to drive 5kΩ and/or 30pF load. The DAC conversion can be started from the application by writing to the data conversion registers.

31.2.1 Block Diagram

Figure 31-1. DAC Block Diagram

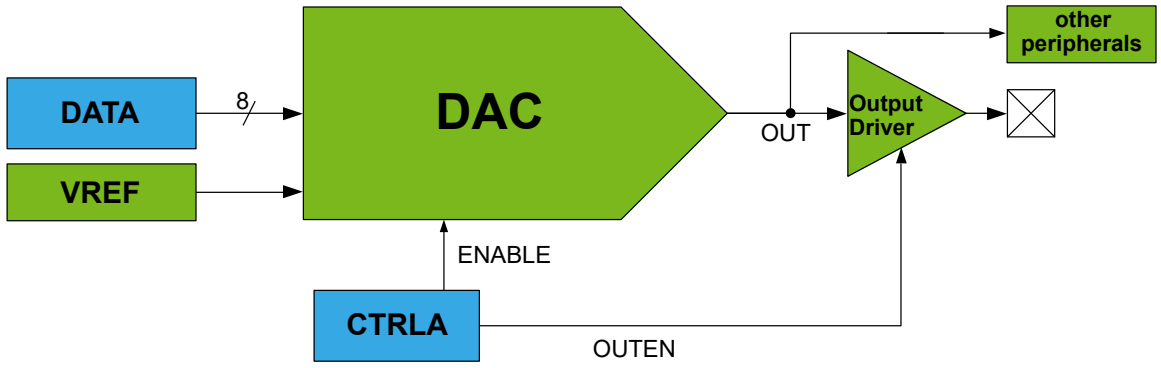

31.2.2 Signal Description

Signal	Description	Type
OUT	DAC output	Analog

Related Links

5. I/O Multiplexing and Considerations

31.2.3 System Dependencies

In order to use this peripheral, other parts of the system must be configured correctly, as described below.

Table 31-1. DAC System Dependencies

Dependency	Applicable	Peripheral
Clocks	Yes	CLKCTRL

.....continued		
Dependency	**Applicable**	**Peripheral**
I/O Lines and Connections	Yes	PORT
Interrupts	No	-
Events	No	-
Debug	Yes	UPDI

Related Links
11.2.2.1 Clocks
31.2.3.2 I/O Lines and Connections
31.2.3.5 Debug Operation

31.2.3.1 Clocks

This peripheral depends on the peripheral clock.

Related Links
10. CLKCTRL - Clock Controller

31.2.3.2 I/O Lines and Connections

Using the I/O lines of the peripheral requires configuration of the I/O pins.

Table 31-2. I/O Lines

Instance	Signal	I/O Line	Peripheral Function
DAC	OUT	PA6	A

The DAC has one analog output pin (OUT) that must be configured before it can be used.

A DAC is also internally connected to the AC and to the ADC. To use this internal OUT as input, both output and input must be configured in their respective registers.

Related Links
16. PORT - I/O Pin Configuration
29. AC – Analog Comparator
30. ADC - Analog to Digital Converter

31.2.3.3 Events

Not applicable.

31.2.3.4 Interrupts

Not applicable.

31.2.3.5 Debug Operation

This peripheral is unaffected by entering debug mode.

If the peripheral is configured to require periodical service by the CPU through interrupts or similar, improper operation or data loss may result during halted debugging.

Related Links
16. PORT - I/O Pin Configuration

31.3 Functional Description

31.3.1 Initialization

To operate the DAC, the following steps are required:

- Select the DAC reference voltage in the Voltage Reference (VREF) peripheral by writing the DAC and AC Reference Selection bits (DAC0REFSEL) in the Control A register of the Voltage Reference (VREF.CTRLA).
- The conversion range is between GND and the selected reference voltage.
- Configure the further usage of the DAC output:
  - Configure an internal peripheral (e.g. AC, ADC) to use the DAC output. See the according peripheral's documentation.
  - Enable the output to a pin by writing a '1' to the Output Enable bit (OUTEN) in the Control A register (DAC.CTRLA). This requires configuration of the Port peripheral.
- Write an initial digital value to the Data register (DAC.DATA).
- Enable the DAC by writing a '1' to the ENABLE bit in the Control A register (DAC.CTRLA).

Related Links

18. VREF - Voltage Reference
29. AC – Analog Comparator
30. ADC - Analog to Digital Converter

31.3.2 Operation

31.3.2.1 Enabling, Disabling and Resetting

The DAC is enabled by writing a '1' to the ENABLE bit in the Control A register (DAC.CTRLA), and disabled by writing a '0' to this bit.

The OUT output to a pin is enabled by writing the Output Enable bit (OUTEN) in the CTRLA register (DAC.CTRLA).

31.3.2.2 Starting a Conversion

When the DAC is enabled (ENABLE=1 in DAC.CTRLA), a conversion starts as soon as the Data register (DAC.DATA) is written.

When the DAC is disabled (ENABLE=0 in DAC.CTRLA), writing DAC.DATA does not trigger a conversion. Instead, the conversion starts on writing a '1' to ENABLE in DAC.CTRLA.

31.3.2.3 DAC as Source For Internal Peripherals

The analog output of the DAC is internally connected to both the AC and the ADC, and is available to these other peripherals when the DAC is enabled (ENABLE=1 in DAC.CTRLA). When the DAC analog output is only being used internally, it is not necessary to enable the pin output driver (i.e. OUTEN=0 in DAC.CTRLA is acceptable).

Related Links

29. AC – Analog Comparator
30. ADC - Analog to Digital Converter

31.3.3 Sleep Mode Operation

If the Run in Standby bit (RUNSTDBY) in the Control A register (DAC.CTRLA) is written to '1' and CLK_PER is available, the DAC will continue to operate in Standby sleep mode. If RUNSTDBY bit is zero, the DAC will stop the conversion in Standby sleep mode.

If conversion is stopped in Standby sleep mode, the DAC and the output buffer are disabled to reduce power consumption. When the device is exiting Standby sleep mode, the DAC and the output buffer (if configured by OUTEN=1 in DAC.CTRLA) are enabled again. Therefore, a certain start-up time is required before a new conversion is initiated.

In Power Down sleep mode, the DAC and output buffer are disabled to reduce power consumption.

31.3.4 Configuration Change Protection

Not applicable.

31.4 Register Summary - DAC

Offset	Name	Bit Pos.								
0x00	CTRLA	7:0	RUNSTDBY	OUTEN						ENABLE
0x01	DATA	7:0	DATA[7:0]							

31.5 Register Description

31.5.1 Control A

Name: CTRLA
Offset: 0x00
Reset: 0x00
Property: -

Bit	7	6	5	4	3	2	1	0
	RUNSTDBY	OUTEN						ENABLE
Access	R/W	R/W						R/W
Reset	0	0						0

Bit 7 – RUNSTDBY Run in Standby Mode
If this bit is written to '1', the DAC or Output Buffer will not automatically be disabled when the device is entering Standby sleep mode.

Bit 6 – OUTEN Output Buffer Enable
Writing a '1' to this bit enables the Output Buffer and sends the OUT signal to a pin.

Bit 0 – ENABLE DAC Enable
Writing a '1' to this bit enables the DAC.

31.5.2 DATA

Name: DATA
Offset: 0x01
Reset: 0x00
Property: -

Bit	7	6	5	4	3	2	1	0
	DATA[7:0]							
Access	R/W	R/W	R/W	R/W	R/W	R/W	R/W	R/W
Reset	0	0	0	0	0	0	0	0

Bits 7:0 – DATA[7:0] Data
These bits contains the digital data which will be converted to an analog voltage.

32. PTC - Peripheral Touch Controller

32.1 Features

- Low-power, high-sensitivity, environmentally robust capacitive touch buttons, sliders, wheels
- Supports wake-up on touch from Sleep mode
- Supports mutual capacitance and self-capacitance sensing
  - Mix-and-match mutual-and self-capacitance sensors
- One pin per electrode – no external components
- Load compensating charge sensing
  - Parasitic capacitance compensation and adjustable gain for superior sensitivity
- Zero drift over the temperature and V_{DD} range
  - Auto calibration and re-calibration of sensors
- Single-shot and free-running charge measurement
- Hardware noise filtering and noise signal de-synchronization for high conducted immunity
- Driven shield for better noise immunity and moisture tolerance
- Selectable channel change delay allows choosing the settling time on a new channel, as required
- Acquisition-start triggered by command or through auto-triggering feature
- Low CPU utilization through interrupt on acquisition-complete
- Using ADC peripheral for signal conversion and acquisition
- Supported by Atmel|START and Atmel Studio documentation.

Related Links

2.1 Configuration Summary

5. I/O Multiplexing and Considerations

32.2 Overview

The Peripheral Touch Controller (PTC) acquires signals in order to detect touch on capacitive sensors. The external capacitive touch sensor is typically formed on a PCB, and the sensor electrodes are connected to the analog front end of the PTC through the I/O pins in the device. The PTC supports both self- and mutual-capacitance sensors.

In mutual-capacitance mode, sensing is done using capacitive touch matrices in various X-Y configurations, including indium tin oxide (ITO) sensor grids. The PTC requires one pin per X-line and one pin per Y-line.

In self-capacitance mode, the PTC requires only one pin (Y-line) for each touch sensor.

The number of available pins and the assignment of X- and Y-lines is depending on both package type and device configuration. Refer to the Configuration Summary and I/O Multiplexing table for details.

Related Links

2.1 Configuration Summary

5. I/O Multiplexing and Considerations

32.2.1 Block Diagram

Figure 32-1. PTC Block Diagram Mutual-Capacitance

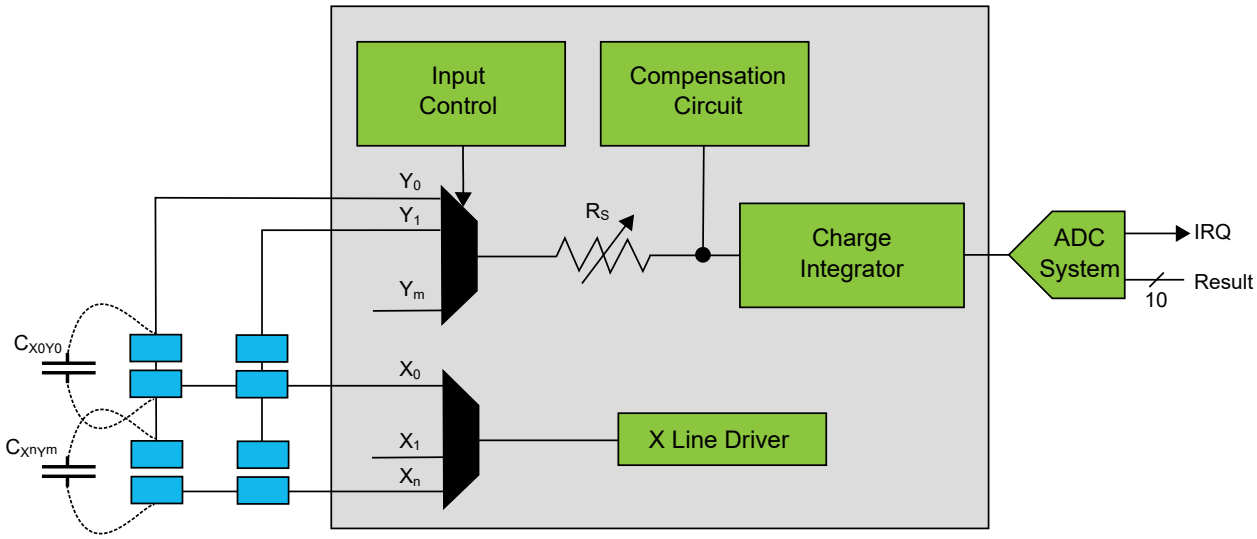

Figure 32-2. PTC Block Diagram Self-Capacitance

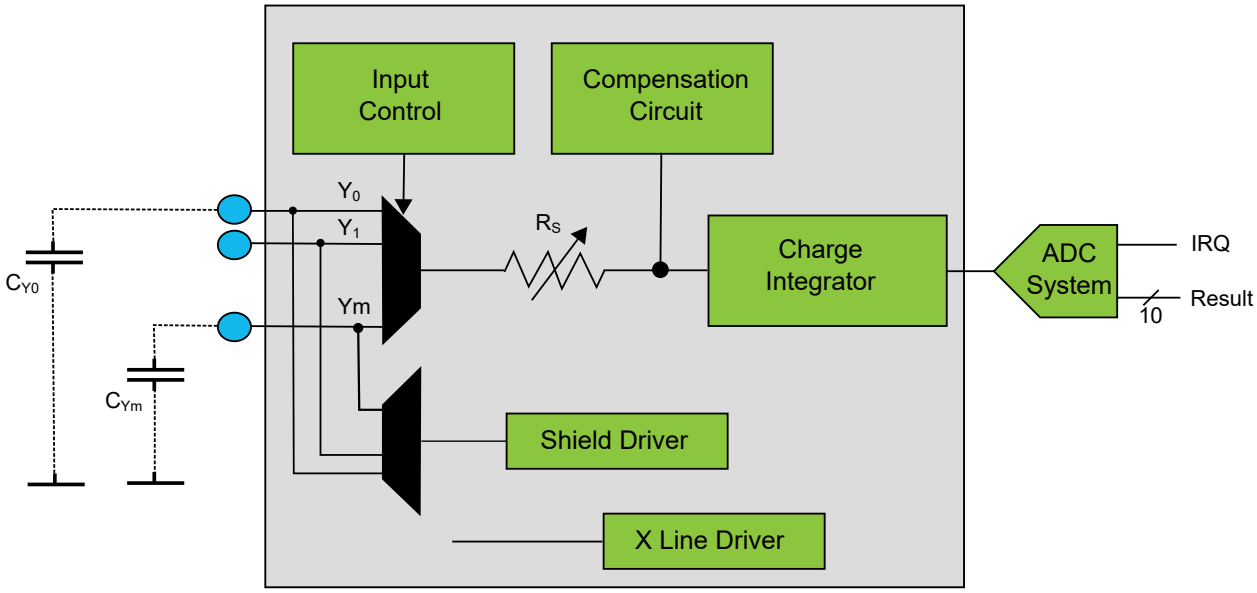

32.2.2 Signal Description

Table 32-1. Signal Description for PTC

Name	Type	Description
Y[m:0]	Analog	Y-line (Input/Output)
X[n:0]	Digital	X-line (Output)

Note: The number of X and Y lines are device dependent. Refer to *Configuration Summary* for details.

Refer to *I/O Multiplexing and Considerations* for details on the pin mapping for this peripheral. One signal can be mapped on several pins.

Related Links

2.1 Configuration Summary

5. I/O Multiplexing and Considerations

32.2.3 System Dependencies

In order to use this Peripheral, configure the other components of the system as described in the following sections.

32.2.3.1 I/O Lines

The I/O lines used for analog X-lines and Y-lines must be connected to external capacitive touch sensor electrodes. External components are not required for normal operation. However, to improve the EMC performance, a series resistor of 1kΩ or more can be used on X-lines and Y-lines.

32.2.3.1.1 Mutual-Capacitance Sensor Arrangement

A mutual-capacitance sensor is formed between two I/O lines - an X electrode for transmitting and Y electrode for sensing. The mutual capacitance between the X and Y electrode is measured by the Peripheral Touch Controller.

Figure 32-3. Mutual Capacitance Sensor Arrangement

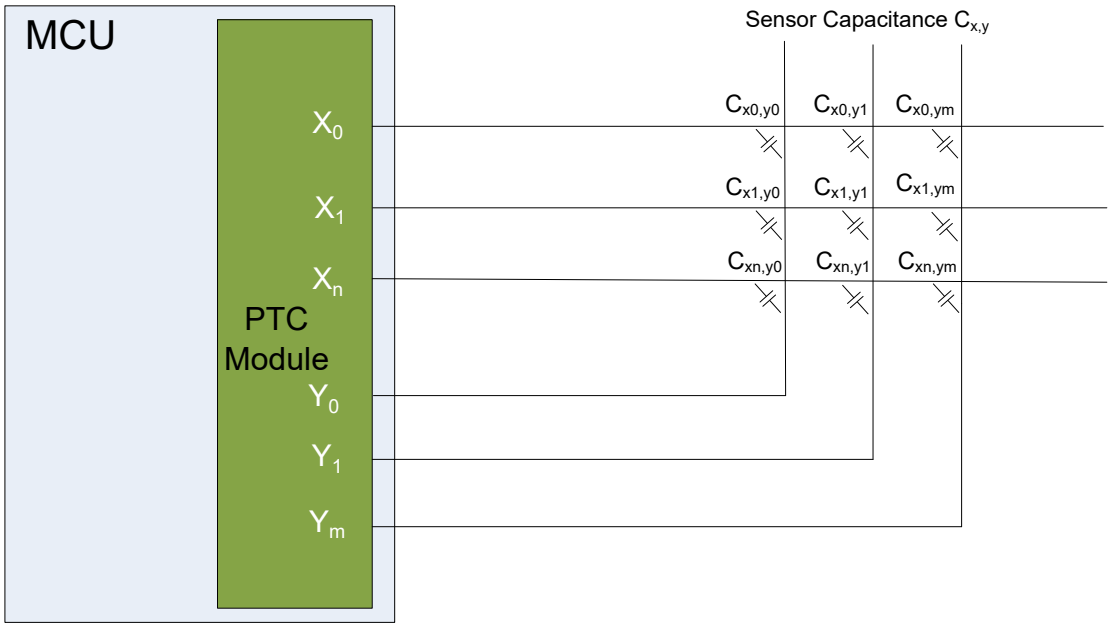

32.2.3.1.2 Self-Capacitance Sensor Arrangement

A self-capacitance sensor is connected to a single pin on the Peripheral Touch Controller through the Y electrode for sensing the signal. The sense electrode capacitance is measured by the Peripheral Touch Controller.

Figure 32-4. Self-capacitance Sensor Arrangement

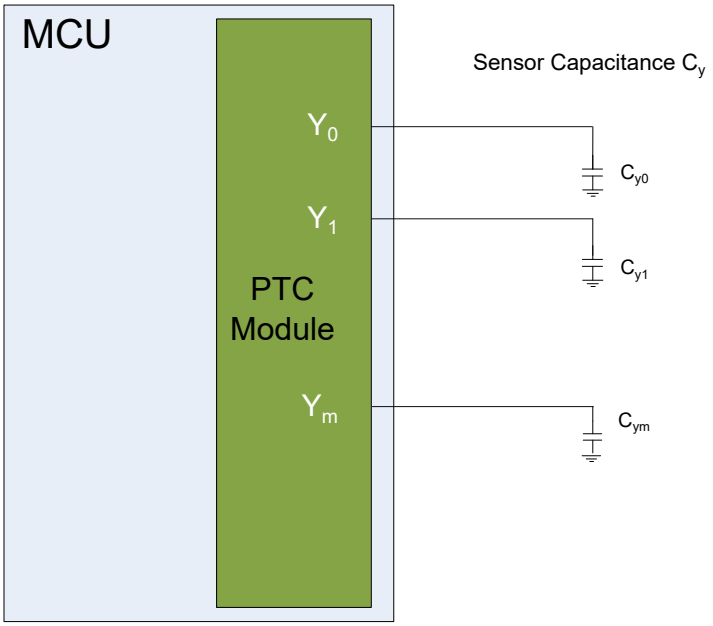

For more information about designing the touch sensor, refer to Buttons, Sliders and Wheels Touch Sensor Design Guide.

32.2.3.2 Clocks

The PTC is clocked by the CLK_PER clock. See the Related Links for details on configuring CLK_PER.

Related Links

10. CLKCTRL - Clock Controller

32.2.3.3 Analog-Digital Converter (ADC)

The PTC is using the ADC for signal conversion and acquisition. The ADC must be enabled and configured appropriately to allow correct behavior of the PTC.

Related Links

30. ADC - Analog to Digital Converter

32.3 Functional Description

In order to access the PTC, the user must use the Atmel Start QTouch Configurator to configure and link the QTouch Library firmware with the application software. QTouch Library can be used to implement buttons, sliders, wheels in a variety of combinations on a single interface.

Figure 32-5. QTouch Library Usage

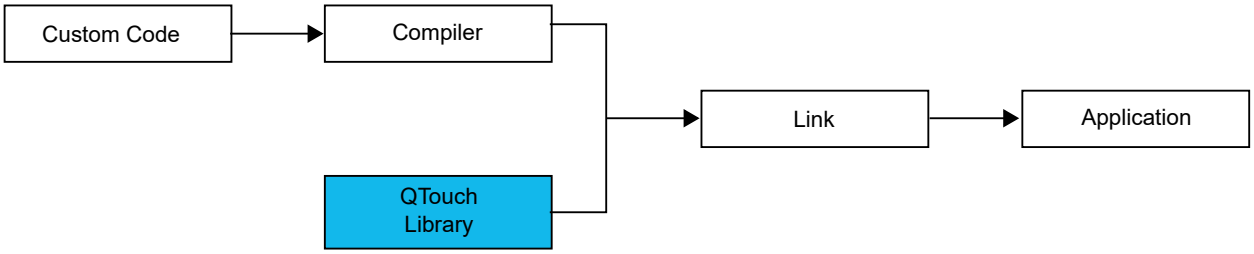

For more information about QTouch Library, refer to the QTouch Library Peripheral Touch Controller User Guide.

33. UPDI - Unified Program and Debug Interface

33.1 Features

- Programming
  - External programming through UPDI 1-wire (1W) interface
    - Enable programming by 12V or fuse
    - Uses the $\overline{\text{RESET}}$ pin of the device for programming
    - No GPIO pins occupied during operation
    - Asynchronous Half-Duplex UART protocol towards the programmer
- Debugging
  - Memory mapped access to device address space (NVM, RAM, I/O)
  - No limitation on device clock frequency
  - Unlimited number of user program breakpoints
  - 2 Hardware Breakpoints
  - Run-time readout of program counter (PC), Stack Pointer (SP) and CPU Status register (CPU_SREG) for code profiling
  - Program Flow Control
    - Go, Stop, Reset, Step Into
  - Non-intrusive run-time chip monitoring without accessing system registers
    - Monitor CRC status and sleep status
- Unified Programming and Debug Interface (UPDI)
  - Built in error detection with error signature readout
  - Frequency Measurement of internal oscillators using the Event System

33.2 Overview

The Unified Program and Debug Interface (UPDI) is an proprietary interface for external programming and on-chip debugging of a device.

The UPDI supports programming of nonvolatile memory (NVM) space; FLASH, EEPROM, fuses, lockbits and the user row. In addition the UPDI can access the entire I/O and data space of the device. See the NVM Controller documentation for programming via the NVM controller and executing NVM controller commands.

Programming and debugging is done through the UPDI Physical interface (UPDI PHY), which is a 1-wire UART based half-duplex interface using the $\overline{\text{RESET}}$ pin for data reception and transmission. Clocking of UPDI PHY is done by an internal oscillator. Enabling of the 1-wire interface, by disabling the reset functionality, is either done by 12V programming or by fusing the $\overline{\text{RESET}}$ pin to UPDI by setting the $\overline{\text{RESET}}$ Pin Configuration (RSTPINCFG) bits in FUSE.SYSCFG0. The UPDI Access layer grants access to the Bus Matrix, with memory mapped access to system blocks such as Memories, NVM, and peripherals.

The Asynchronous System Interface (ASI) provides direct interface access to On-Chip Debugging (OCD), NVM and System Management features. This gives the debugger direct access to system information, without requesting bus access.

Related Links

9. NVMCTRL - Non Volatile Memory Controller
33.3.7 Enabling of KEY Protected Interfaces

33.2.1 Block Diagram

Figure 33-1. UPDI Block Diagram

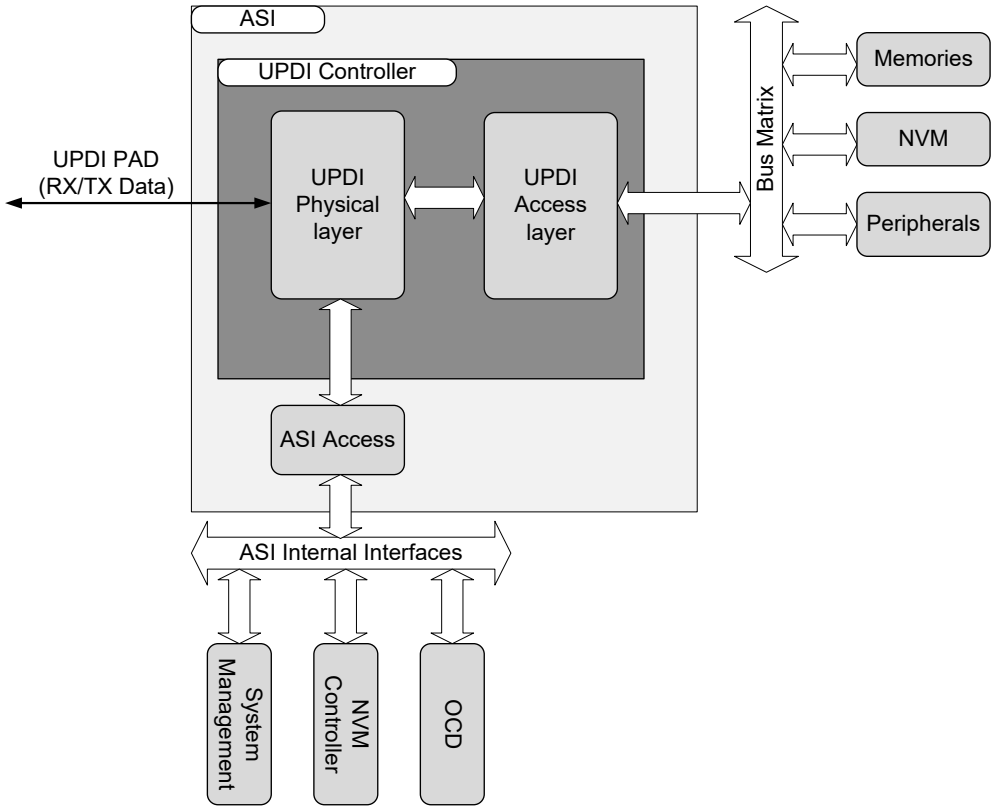

33.2.2 System Dependencies

In order to use this peripheral, other parts of the system must be configured correctly, as described below.

Table 33-1. UPDI System Dependencies

Dependency	Applicable	Peripheral
Clocks	Yes	CLKCTRL
I/O Lines and Connections	Yes	PORT
Interrupts	No	-
Events	Yes	EVSYS
Debug	Yes	UPDI

Related Links

33.2.2.2 I/O Lines and Connections

33.2.2.4 Power Management

33.2.2.1 Clocks

The UPDI Physical (UPDI PHY) layer and UPDI Access (UPDI ACC) layer can operate on different clock domains. The UPDI PHY layer clock is derived from an internal oscillator, and the UPDI ACC layer clock is the same as the system clock. There is a synchronization boundary between the UPDI PHY layer and UPDI ACC layer, which ensures correct operation between the clock domains. The UPDI clock output frequency is selected through the ASI, and the default UPDI clock start-up frequency is 4MHz after enabling the UPDI. The UPDI clock frequency is changed by writing the UPDICLKSEL bits in ASI_CTRLA register.

Figure 33-2. UPDI clock domains

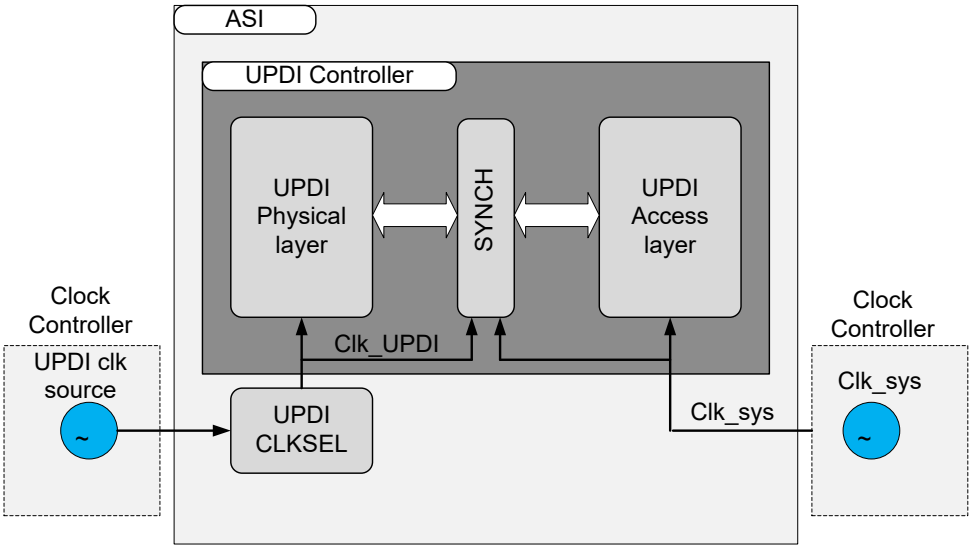

Related Links

10. CLKCTRL - Clock Controller

33.2.2.2 I/O Lines and Connections

To operate the UPDI, the $\overline{\text{RESET}}$ pin must be set to UPDI Mode. This is not done through the PORT I/O Pin Configuration as for regular I/O Pins, but through setting the $\overline{\text{RESET}}$ pin Configuration (RSTPINCFG) bits in FUSE.SYSCFG0 as described in 33.3.2.1 UPDI Enable with Fuse Override of RESET pin, or by following the UPDI 12V enable sequence from 33.3.2.2 UPDI Enable with 12V Override of RESET Pin. Pull enable, input enable and output enable settings are automatically controlled by the UPDI when active.

33.2.2.3 Events

The events of this peripheral are connected to the Event System.

Related Links

14. EVSYS - Event System

33.2.2.4 Power Management

The UPDI physical layer continues to operate in any sleep mode and is always accessible for a connected debugger, but read/write access to the system bus is restricted in sleep modes where the CPU clock is switched off. The UPDI can be enabled at any time, independent of the system sleep state. See 33.3.9 Sleep Mode Operation for details on UPDI operation duing sleep modes.

33.3 Functional Description

33.3.1 Principle of Operation

Communication through the UPDI is based on standard UART communication, using a fixed frame format, and automatic baud rate detection for clock and data recovery. In addition to the data frame, there are several control frames which are important to the communication. The supported frame formats are presented in Figure 33-3.

Figure 33-3. Supported UPDI Frame formats

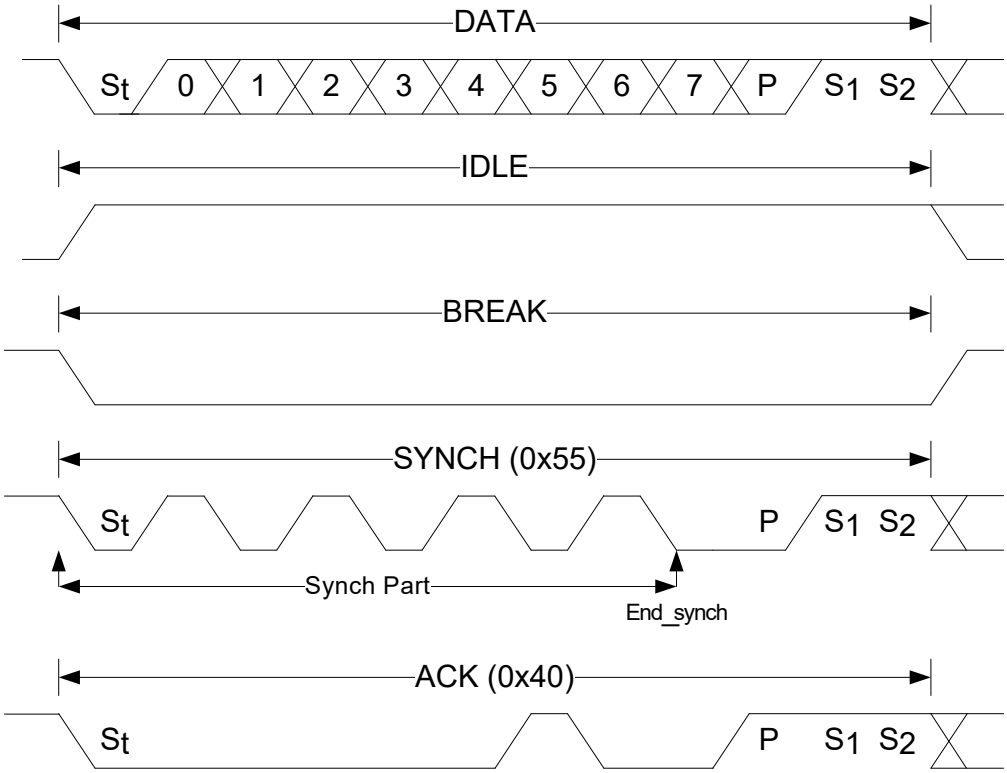

Data Frame	Consist of 1 start bit (always low), 8 data bits, 1 parity bit (even parity) and two stop bits (always high). If the start bit, parity bit or stop bits have an incorrect value, an error will be detected and signalized by the UPDI. The parity bit check in the UPDI can be disabled by writing the PARD bit in UPDI.CTRLA, in which case the parity generation from the debugger can be ignored.
IDLE Frame	Special frame which consist of 12 high bits. This is the same as keeping the transmission line in an IDLE state.
BREAK	Special frame which consist of 12 low bits. The BREAK frame is used to reset the UPDI back to its default state, and is typically used for error recovery.
SYNCH	The SYNCH frame (0x55) is used by the baud rate generator to set the baud rate for the coming transmission. A SYNCH character is always expected by the UPDI in front of every new instruction, and after a successful BREAK has been transmitted.
ACK	The Acknowledge (ACK) character is transmitted from the UPDI whenever a ST or STS instruction has successfully crossed the synchronization boundary, and have gained bus access. When an ACK is received by the debugger, the next transmission can start.

33.3.1.1 UPDI UART

All transmission and reception of serial data on the UPDI is achieved using the UPDI frames presented in Figure 33-3. Communication is initiated from the master (debugger) side, and every transmission must start with a SYNCH character upon which the UPDI can recover the transmission baud rate, and store this setting for the coming data. The baud rate set by the SYNCH character will be used for both reception and transmission for the instruction byte received after the SYNCH. See 33.3.3 UPDI Instruction Set for details on when the next SYNCH character is expected in the instruction stream.

There is no writable baud rate register in the UPDI, so the baud rate sampled from the SYNCH character is used for data recovery by sampling the start bit, and do a majority voting on the middle samples. This process is repeated for all bits in the frame, including the parity bit and two stop bits. The baud generator uses 16 samples, and the majority voting is done on sample 7,8 and 9.

Figure 33-4. UPDI UART Start Bit and Data/Parity/Stop bit sampling

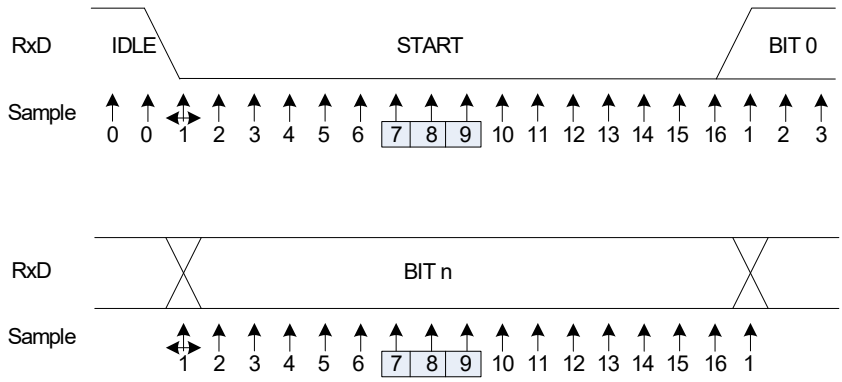

The transmission Baud Rate must be set up in relation to the selected UPDI clock, which can be adjusted by UPDICLKSEL in UPDI.ASI_CTRLA. See Table 33-2 for recommended maximum and minimum baud rate settings.

Table 33-2. Recommended UART Baud Rate based on UPDICLKSEL setting

UPDICLKSEL[1:0]	MAX Recommended Baud Rate	MIN Recommended Baud Rate
0x1 (16MHz)	0.9Mbps	0.300kbps
0x2 (8MHz)	450kbps	0.150kbps
0x3 (4MHz) - Default	225kbps	0.075kbps

The UPDI baud rate generator utilizes fractional baud counting to minimize the transmission error. With the fixed frame format used by the UPDI, the maximum and recommended receiver transmission error limits can be seen in the following table:

Table 33-3. Receiver Baud Rate Error

Data + parity bits	R_{slow}	R_{fast}	Max Total Error (%)	Recommended max RX error (%)
9	96.39	104.76	+4.76 / -3.61	+1.5 / -1.5

33.3.1.2 BREAK Character

The BREAK character is used to reset the internal state of the UPDI to the default setting. This is useful if the UPDI enters an error state due to communication error, or when synchronization between the debugger and the UPDI is lost.

A single BREAK character is enough to reset the UPDI, but in some special cases where the BREAK character is sent when the UPDI has not yet entered the error state, a double BREAK character might be needed. A double BREAK is guaranteed to reset the UPDI from any state. When sending a double BREAK it is required to have at least one stop bit between the BREAK characters.

No SYNCH character is required before the BREAK, because the BREAK is used to reset the UPDI from any state. This means that the UPDI will sample the BREAK based on the last stored baud rate setting, derived from the last received valid SYNCH character. If the communication error was due to incorrect sampling of the SYNCH character, the baud rate is unknown to the connected debugger. For this reason the BREAK character should be transmitted at the slowest recommended baud rate setting for the selected UPDI clock according to Table 33-4:

Table 33-4. Recommended BREAK Character Duration

UPDICLKSEL[1:0]	Recommended BREAK Character Duration
0x1 (16MHz)	6.15ms
0x2 (8MHz)	12.30ms
0x3 (4MHz) - Default	24.60ms

33.3.2 Operation

The UPDI must be enabled before the UART communication can start:

- 33.3.2.2 UPDI Enable with 12V Override of RESET Pin
- 33.3.2.1 UPDI Enable with Fuse Override of RESET pin

33.3.2.1 UPDI Enable with Fuse Override of $\overline{\text{RESET}}$ pin

When the $\overline{\text{RESET}}$ Pin Configuration (RSTPINCFG) bits in FUSE.SYSCFG0 are 0x1, the $\overline{\text{RESET}}$ pin will be overridden, and the UPDI will take control of the pin and configure it as input with pull-up. When the pull-up is detected by a connected debugger, the UPDI enable sequence, as depicted below, is started.

Figure 33-5. UPDI Enable sequence with UPDI PAD Enabled by Fuse

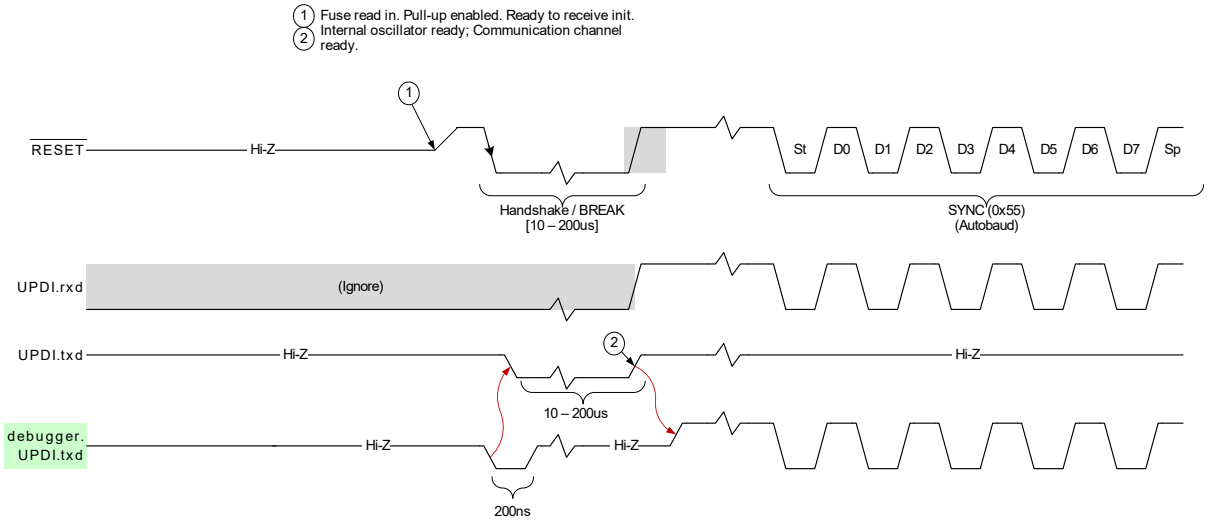

When the pull-up is detected, the debugger initiates the enable sequence by driving the line low for a minimum of 200ns and a maximum of 1us to ensure that the line is released from the debugger before the UPDI enable sequence is done.

The negative edge is detected by the UPDI, which requests the UPDI clock. The UPDI will continue to drive the line low until the clock is stable and ready for the UPDI to use. The duration of this will vary, depending on the status of the oscillator when the UPDI is enabled. A start-up time between 10us and 200us can be expected. After this duration, the data line will be released by the UPDI, and pulled-high.

When the Debugger detects that the line is high, the initial SYNCH character (0x55) must be sent to properly enable the UPDI for communication. If the start bit of the SYNCH character is not sent within 13.5ms, the UPDI will disable itself, and the enable sequence must be repeated. This time is based on counted cycles on the 4MHz UPDI clock, which is default when enabling the UPDI. The disable is performed to avoid the UPDI being enabled unintentionally.

After successful SYNCH character transmission, the first instruction frame can be transmitted.

33.3.2.2 UPDI Enable with 12V Override of $\overline{\text{RESET}}$ Pin

GPIO or Reset functionality on the $\overline{\text{RESET}}$ pin can be overridden by the UPDI by using 12V programming. By applying a 12V pulse to the $\overline{\text{RESET}}$ pin, the pin functionality is switched to UPDI, independent of RSTPINCFG in FUSE.SYSCFG0. It is recommended to always reset the device before starting the 12V enable sequence.

During power-up, the Power-on Reset (POR) must be released before the 12V pulse can be applied. The duration of the pulse is recommended in the range from 100 µs to 1 ms, before tri-stating. When applying the rising edge of the 12V pulse, the UPDI will be reset. After tri-stating, the UPDI will remain in Reset until the $\overline{\text{RESET}}$ pin is driven low by the debugger. This will release the UPDI Reset and initiate the same enable sequence as explained in 33.3.2.1 UPDI Enable with Fuse Override of RESET pin.

The following figure shows the 12V enable sequence.

Figure 33-6. UPDI Enable Sequence by 12V Programming

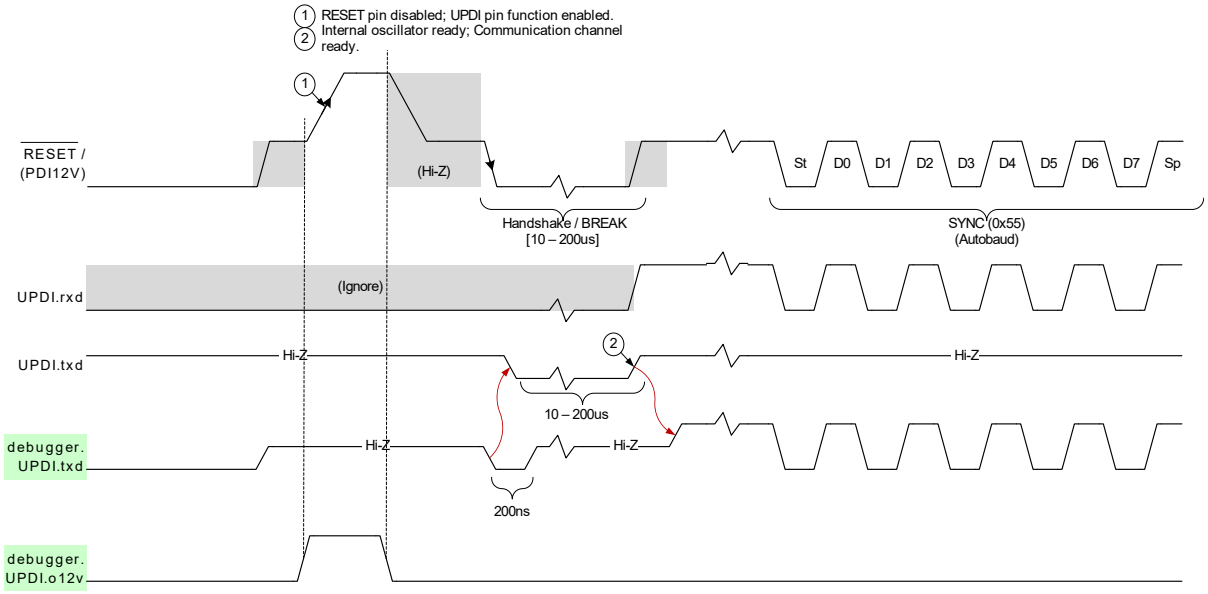

When enabled by 12V, only a POR will disable the UPDI configuration on the $\overline{\text{RESET}}$ pin, and restore the default setting. If issuing a UPDI Disable command through the UPDIDIS bit in UPDI.CTRLB, the UPDI will be reset and the clock request will be canceled, but the $\overline{\text{RESET}}$ pin will remain in UPDI configuration.

Note: If insufficient external protection is added to the UPDI Pin, an ESD pulse can be interpreted as a 12V override by the microcontroller and enables the UPDI.

33.3.2.3 UPDI Disable

Any programming or debug session should be terminated by writing the UPDIDIS bit in UPDI.CTRLB. Writing this bit will reset the UPDI including any decoded KEYs, and disable the oscillator request for the module. If the disable operation is not performed, the UPDI will stay enabled and request its oscillator, causing increased power consumption for the application.

During the enable sequence the UPDI can disable itself in case of a faulty enable sequence. There are two cases which will cause an automatic disable.

- A SYNCH character is not sent within 13.5ms after the initial enable pulse described in 33.3.2.1 UPDI Enable with Fuse Override of RESET pin.
- The first SYNCH character after an initiated enable is too short or too long to register as a valid SYNCH character. See Table 33-2 for recommended baud rate operating ranges.

33.3.2.4 Output Enable Timer Protection for GPIO Configuration

When the $\overline{\text{RESET}}$ Pin Configuration (RSTPINCFG) bits in FUSE.SYSCFG0 are 0x0, the $\overline{\text{RESET}}$ pin is configured as GPIO. To avoid a potential conflict between the GPIO actively driving the output and a 12V UPDI enable sequence initiation, the GPIO output driver is disabled for 768 OSC32K cycles after a System Reset. Enable any interrupts for this pin only after this period.

It is always recommended to issue a System Reset before entering the 12V programming sequence.

33.3.2.5 UPDI Communication Error Handling

The UPDI contains a comprehensive error detection system, to be able to provide information to the debugger when recovering from an error scenario. The error detection consist of detecting physical transmission errors like start bit error, parity error, contention error and frame error, to more high level errors like access timeout error. See UPDI_STATUSB.PESIG for an overview of the available error signatures.

Whenever the UPDI detects an error, it will immediately transfer to an internal error state to avoid unwanted system communication. In the error state the UPDI will ignore all incoming data requests, except if a BREAK character is transmitted. The following procedure should always be applied when recovering from an error condition.

- Send a BREAK character. See 33.3.1.2 BREAK Character for recommended BREAK character handling.

- Send a SYNCH character at the desired baud rate for the next data transfer. Upon receiving a BREAK, the UPDI oscillator setting in UPDI.ASI_CTRLA is reset to the 4MHz default UPDI clock selection. This affects the baud rate range of the UPDI according to Table 33-2 .
- Do a Load Control Status (LDCS) to UPDI.STATUSB register to read the PESIG field. PESIG will give information about the occurred error, and the error signature will be cleared when read.
- The UPDI is now recovered from the error state, and ready to receive the next SYNCH character and instruction.

33.3.2.6 Direction Change

In order to ensure correct timing for half-duplex UART operation, the UPDI has a built in Guard Time mechanism to relax the timing when changing direction from RX mode to TX mode. The Guard Time is a number of IDLE bits inserted before the next start bit is transmitted. The number of IDLE bits can be configured through GTVAL in UPDI.CTRLA. The duration of each IDLE bit is given by the baud rate used by the current transmission.

It is not recommended to use GTVAL setting 0x7, with no additional IDLE bits.

Figure 33-7. UPDI Direction Change by inserting IDLE bits

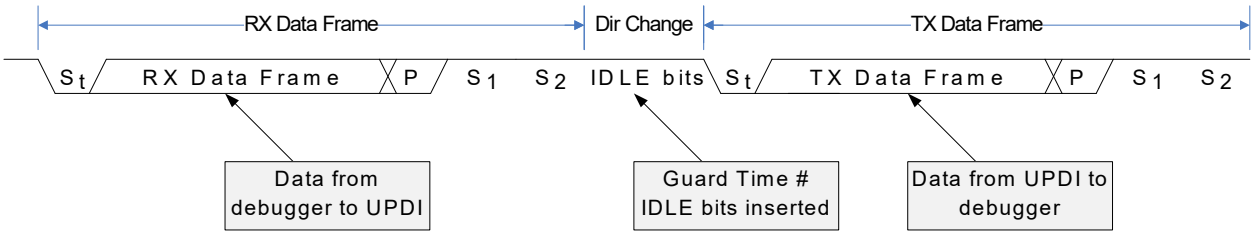

The UPDI Guard Time is the minimum IDLE time that the connected debugger will experience when waiting for data from the UPDI. Because of the asynchronous interface to the system, as presented in 33.2.2.1 Clocks, the ratio between the UPDI clock and the system clock will affect the synchronization time, and how long it takes before the UPDI can transmit data. In the cases where the synchronization delay is shorter than the current Guard Time setting, the Guard Time will be given by GTVAL directly.

33.3.3 UPDI Instruction Set

Communication through the UPDI is based on a small instruction set. The instructions are used to access the internal UPDI and ASI Control and Status (CS) space, as well as the memory mapped system space. All instructions are byte instructions, and must be preceded by a SYNCH character to determine the baud rate for the communication. See 33.3.1.1 UPDI UART for information about setting the baud rate for the transmission. The following Figure gives an overview of the UPDI instruction set.

Figure 33-8. UPDI Instruction Set Overview

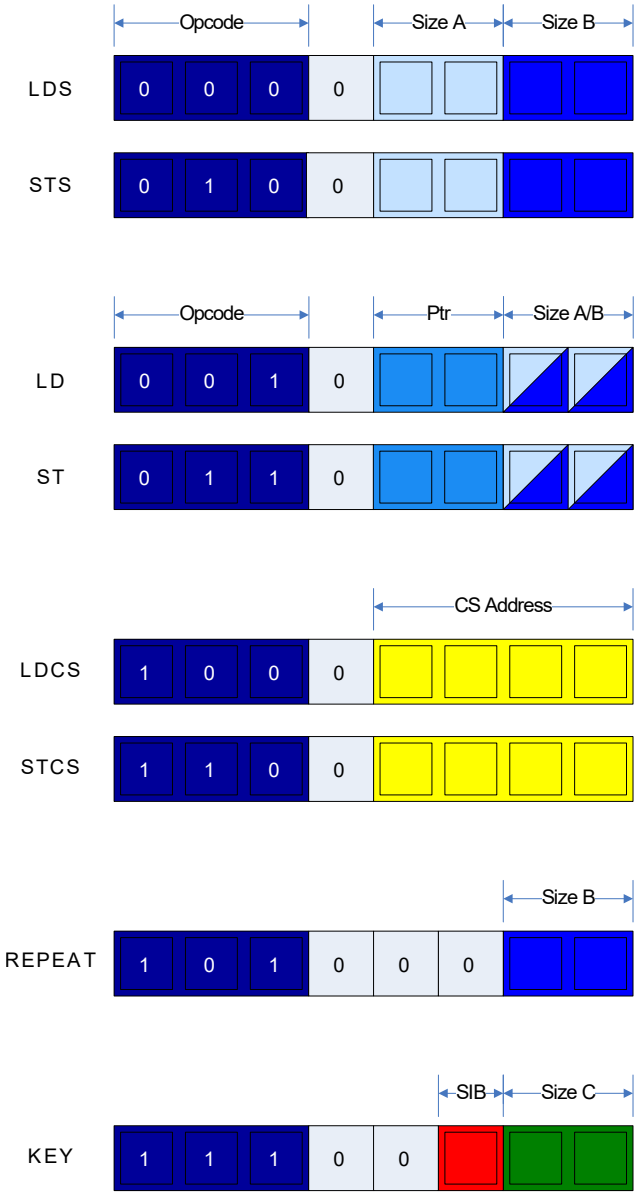

OPCODE	
0 0 0	LDS
0 0 1	LD
0 1 0	STS
0 1 1	ST
1 0 0	LDCS (LDS Control/Status)
1 0 1	REPEAT
1 1 0	STCS (STS Control/Status)
1 1 1	KEY

Size A - Address size	
0 0	Byte
0 1	Word (2 Bytes)
1 0	Reserved
1 1	Reserved

Ptr - Pointer access	
0 0	*(ptr)
0 1	*(ptr++)
1 0	ptr
1 1	Reserved

Size B - Data size	
0 0	Byte
0 1	Word (2 Bytes)
1 0	Reserved
1 1	Reserved

CS Address (CS - Control/Status reg.)	
0 0 0 0	Reg 0
0 0 0 1	Reg 1
0 0 1 0	Reg 2
0 0 1 1	Reg 3
0 1 0 0	Reg 4 (ASI CS space)
.....	
1 1 1 1	Reserved

Size C - Key size	
0 0	64 bits (8 Bytes)
0 1	128 bits (16 Bytes)
1 0	Reserved
1 1	Reserved

SIB – System Information Block sel.	
0	Receive KEY
1	Send SIB

33.3.3.1 LDS - Load Data from Data Space Using Direct Addressing

The LDS instruction is used to load data form the bus matrix and into the serial shift register for serial read out. The LDS instruction is based on direct addressing, and the address must be given as an operand to the instruction for the data transfer to start. Maximum supported size for address and data is 16 bit. LDS supports repeated memory access when combined with the REPEAT instruction.

As shown in Figure 33-9, after issuing the SYNCH character followed by the LDS instruction, the number of desired address bytes, as indicated by the SizeA field in the instruction, must be transmitted. The output data size is selected by the SizeB field, and is issued after the specified Guard Time. When combined with the REPEAT instruction, the address must be sent in for each iteration of the repeat, meaning after each time the output data sampling is done. There is no automatic address increment when using REPEAT with LDS, as it uses a direct addressing protocol.

Figure 33-9. LDS Instruction Operation

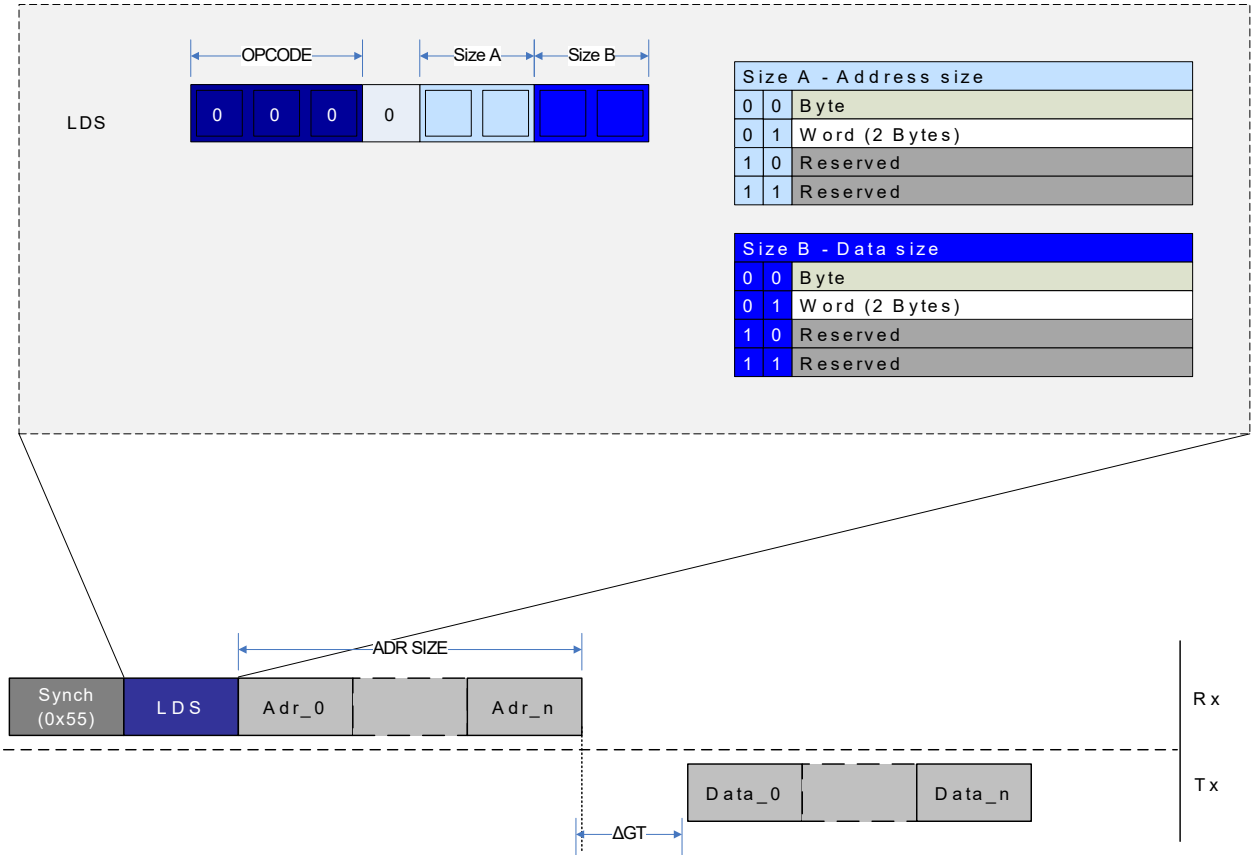

33.3.3.2 STS - Store Data to Data Space Using Direct Addressing

The STS instruction is used to store data that is shifted serially into the PHY layer to the bus matrix address space. The STS instruction is based on direct addressing, where the address is the first set of operands, and data is the second set. The size of the address and data operands are given by the size fields presented in the Figure below. Maximum size for both address and data is 16 bit.

STS supports repeated memory access when combined with the REPEAT instruction.

Figure 33-10. `STS` Instruction Operation

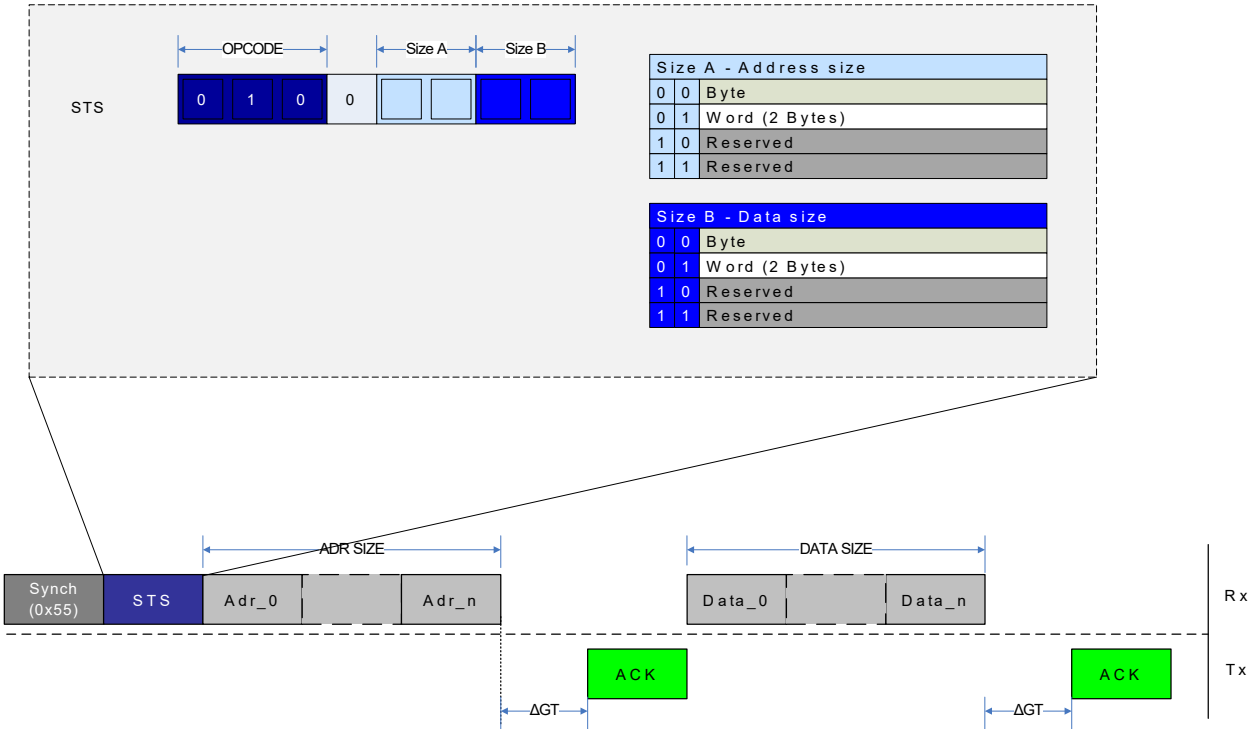

The transfer protocol for an `STS` instruction is depicted in the Figure as well, following this sequence:

1. The address is sent.
2. An Acknowledge (ACK) is sent back from the UPDI if the transfer was successful.
3. The number of bytes as specified in the STS instruction is sent.
4. A new ACK is received after the data has been successfully transferred.

33.3.3.3 `LD` - Load Data from Data Space Using Indirect Addressing

The `LD` instruction is used to load data form the bus matrix and into the serial shift register for serial read out. The `LD` instruction is based on indirect addressing, which means that the address pointer in the UPDI needs to be written prior to bus matrix access. Automatic pointer post increment operation is supported, and is useful when the `LD` instruction is used with `REPEAT`. It is also possible to do a `LD` of the UPDI pointer register. Maximum supported size for address and data load is 16 bit.

Figure 33-11. LD Instruction Operation

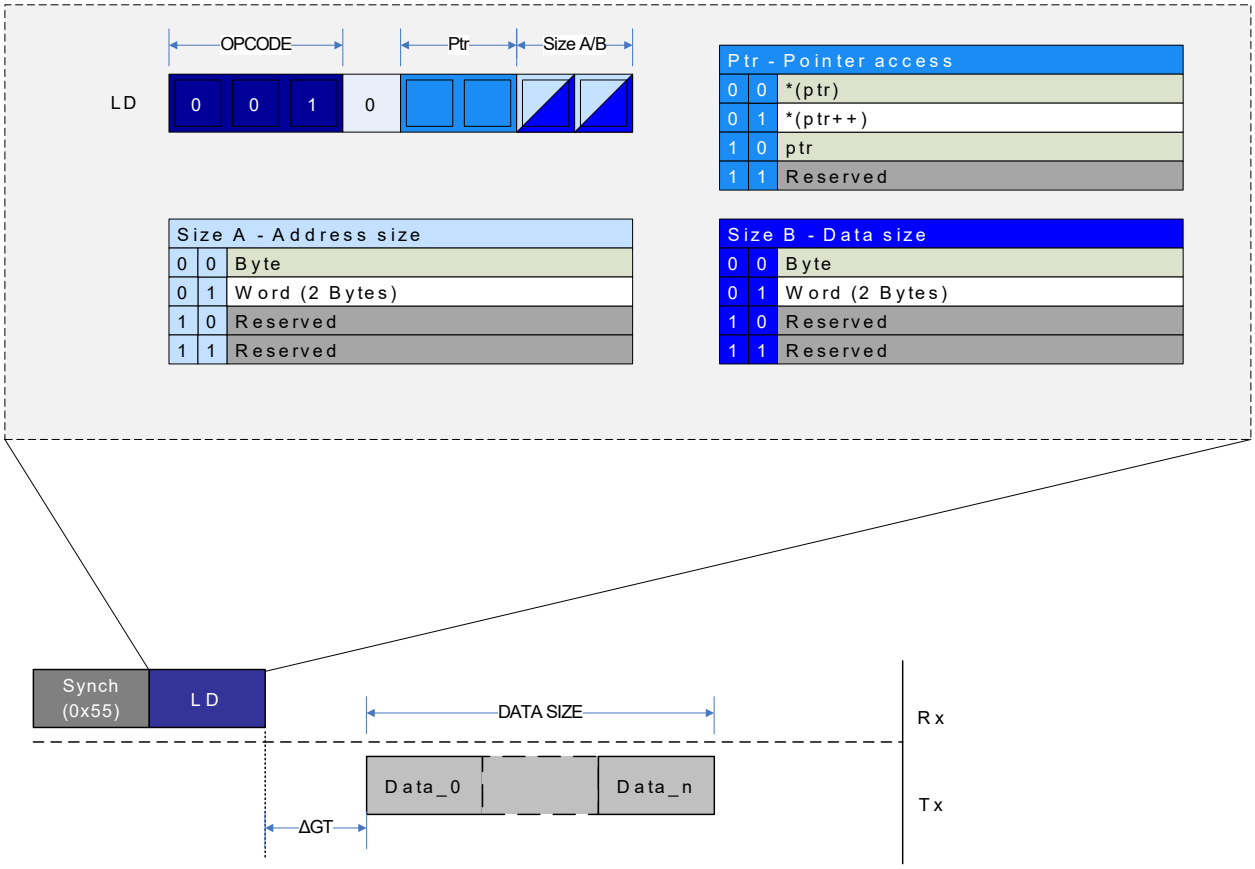

The Figure above shows an example of a typical LD sequence, where data is received after the Guard Time period. Loading data from the UPDI pointer register follows the same transmission protocol.

33.3.3.4 ST - Store Data from Data Space Using Indirect Addressing

The ST instruction is used to store data that is shifted serially into the PHY layer to the bus matrix address space. The ST instruction is based on indirect addressing, which means that the address pointer in the UPDI needs to be written prior to bus matrix access. Automatic pointer post increment operation is supported, and is useful when the ST instruction is used with REPEAT. ST is also used to store the UPDI address pointer into the pointer register. Maximum supported size for storing address and data is 16 bit.

Figure 33-12. ST Instruction Operation

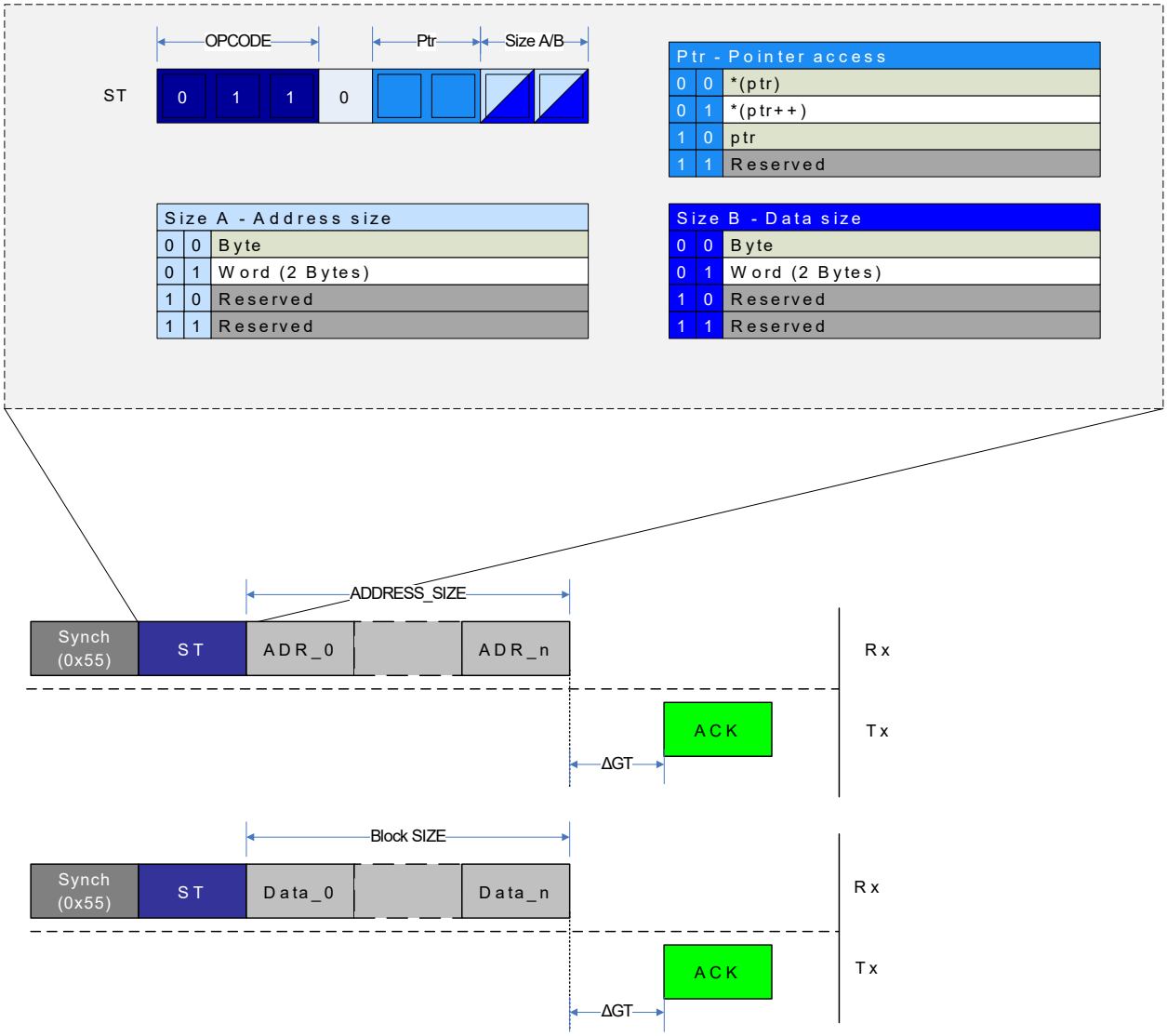

The Figure above gives an example of ST to the UPDI pointer register, and store of regular data. In both cases an Acknowledge (ACK) is sent back by the UPDI if the store was successful, and a SYNCH character is sent before each instruction. To write the UPDI pointer register, the following procedure should be followed.

- Set the PTR field in the ST instruction to the signature 0x2
- Set the address size field SizeA to the desired address size
- After issuing the ST instruction, send SizeA bytes of address data
- Wait for the ACK character which signifies a successful write to the address register

After the address register is written, sending data is done in a similar fashion

- Set the PTR field in the ST instruction to the signature 0x0 to write to the address specified by the UPDI pointer register. If the PTR field is set to 0x1, the UPDI pointer is automatically updated to the next address according to the data size SizeD field of the instruction after the write is executed.
- Set the SizeD field in the instruction to the desired data size.
- After sending the ST instruction, send SizeD bytes of address data
- Wait for the ACK character which signifies a successful write to the bus matrix

When used with the REPEAT, it is recommended to set up the address register with the start address for the block to be written, and use pointer post increment register to automatically increase the address for each repeat cycle. When using repeat, the data frame of SizeD data bytes can be sent after each received ACK.

33.3.3.5 LCDS - Load Data from Control and Status Register Space

The LCDS instruction is used to load data from the UPDI and ASI CS-space. LCDS is based on direct addressing, where the address is part of the instruction opcode. The total address space for LCDS is 16 byte, and can only access the internal UPDI register space. This instruction only supports byte access, and data size is not configurable.

Figure 33-13. LCDS Instruction Operation

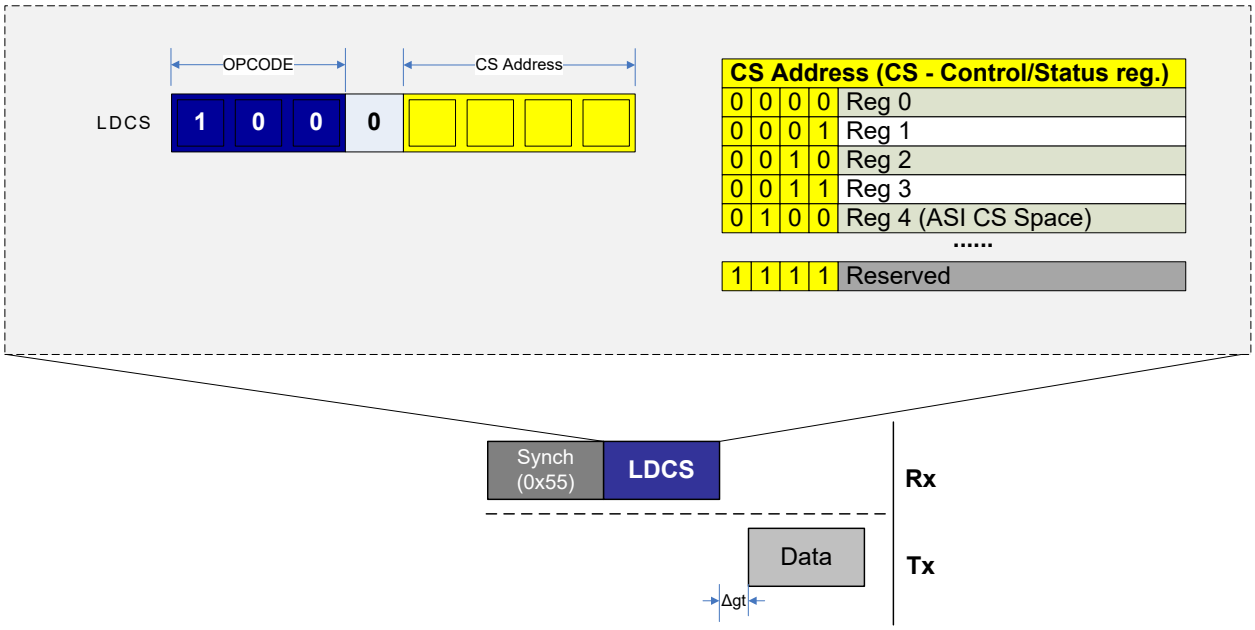

The Figure above shows a typical example of LCDS data transmission. A data byte from the LCDS space is transmitted from the UPDI after the Guard-Time is completed.

33.3.3.6 STCS (Store Data to Control and Status register space)

The STCS instruction is used to store data to the UPDI and ASI CS-space. STCS is based on direct addressing, where the address is part of the instruction opcode. The total address space for STCS is 16 byte, and can only access the internal UPDI register space. This instruction only supports byte access, and data size is not configurable.

Figure 33-14. STCS instruction operation

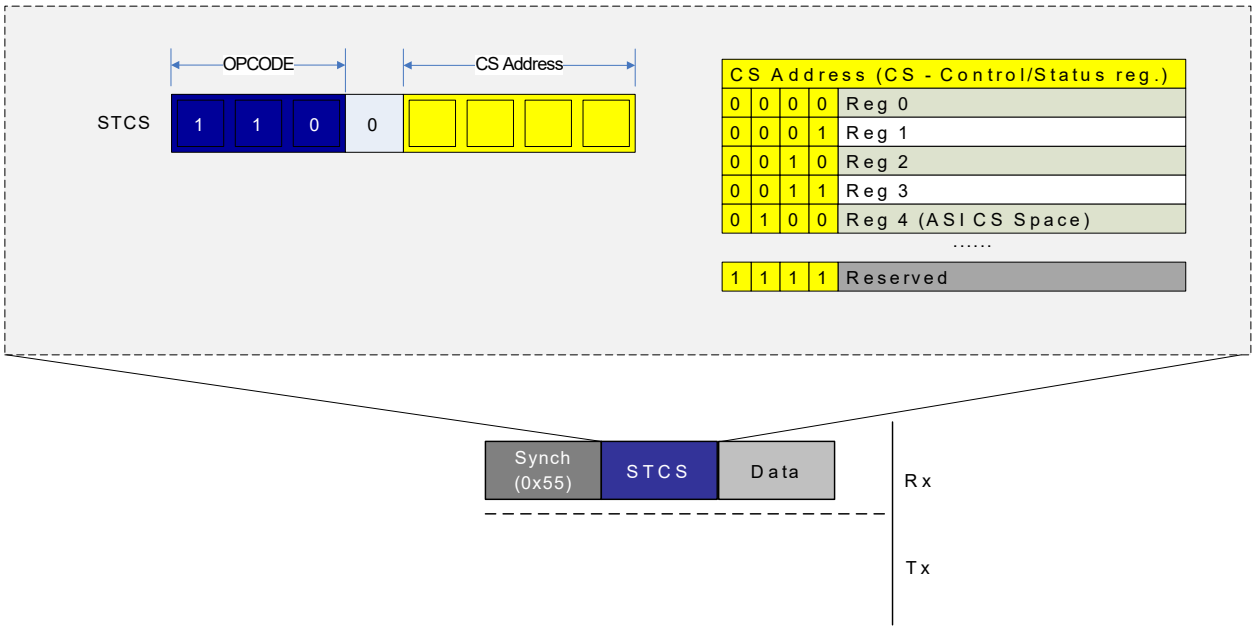

Figure 33-14 shows the data frame transmitted after the SYNCH and instruction frames. There is no response generated from the STCS instruction, as is the case for ST and STS.

33.3.3.7 REPEAT - Set Instruction Repeat Counter

The REPEAT instruction is used to store the repeat count value into the UPDI repeat counter register. When instructions are used with REPEAT, protocol overhead for SYNCH- and Instruction Frame can be omitted on all instructions except the first instruction after the REPEAT is issued. REPEAT is most useful for memory instructions (LD, ST, LDS, STS), but all instructions can be repeated, except the REPEAT instruction itself.

The DATA_SIZE opcode field refers to the size of the repeat value. Only byte size (up to 255 repeats) is supported. The instruction that is loaded directly after the REPEAT instruction will be repeated RPT_0 times. The instruction will be issued a total of RPT_0 + 1 times. An ongoing repeat can only be aborted by sending a BREAK character.

Figure 33-15. REPEAT Instruction Operation

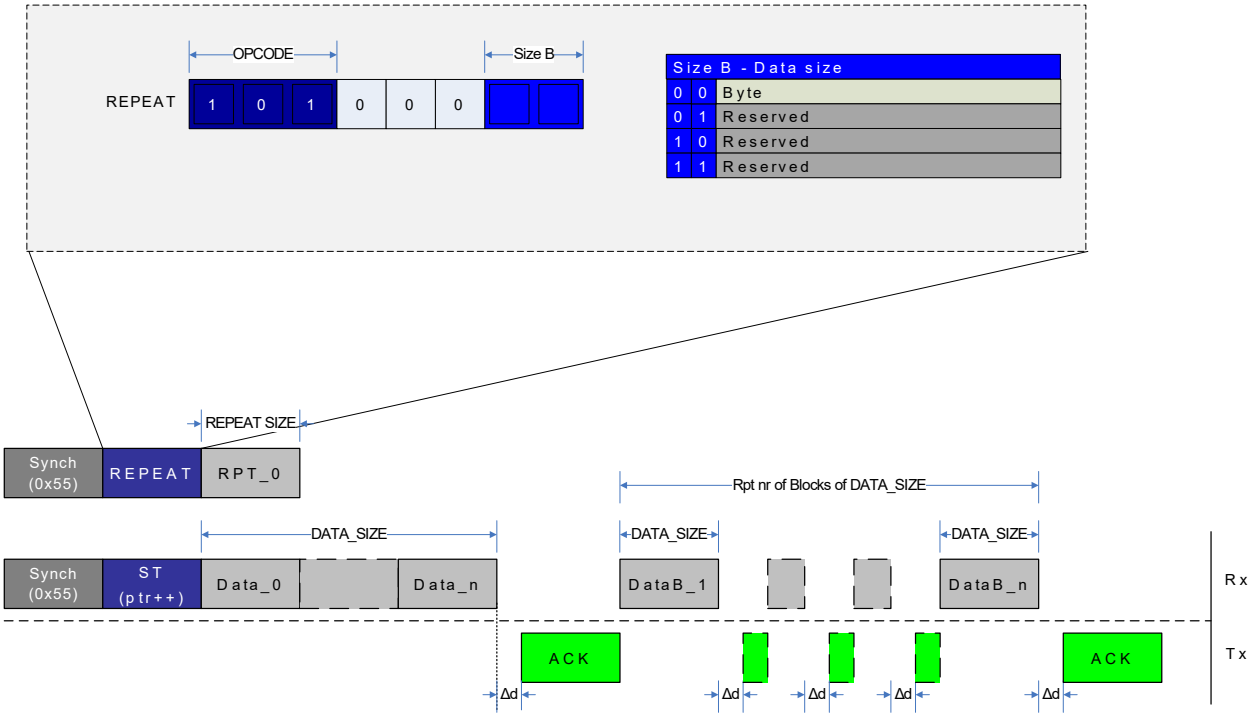

The Figure above gives an example of repeat operation with a ST instruction using pointer post increment operation. After the REPEAT instruction is sent with RPT_0 = ***n***, the first ST instruction is issued with SYNCH- and Instruction frame, while the next ***n*** ST-instructions are executed by only sending in data bytes according to the ST operand DATA_SIZE, and maintaining the Acknowledge (ACK) handshake protocol.

If using indirect addressing instructions (LD/ST) it is recommended to always use the pointer post increment option when combined with REPEAT . Otherwise the same address will be accessed in all repeated access operations. For direct addressing instructions (LDS/STS), the address must always be transmitted as specified in the instruction protocol, before data can be received (LDS) or sent (STS).

33.3.3.8 KEY - Set Activation KEY

The KEY instruction is used for communicating KEY bytes to the UPDI, opening up for executing protected features on the device. See Table 33-5for an overview over functions that are activated by KEYs. For the KEY instruction, only 64bit KEY size is supported. If the System Information Block (SIB) field of the KEY instruction is set, the KEY instruction returns the SIB instead of expecting incoming KEY bytes. Maximum supported size for SIB is 128bits.

Figure 33-16. `KEY` Instruction Operation

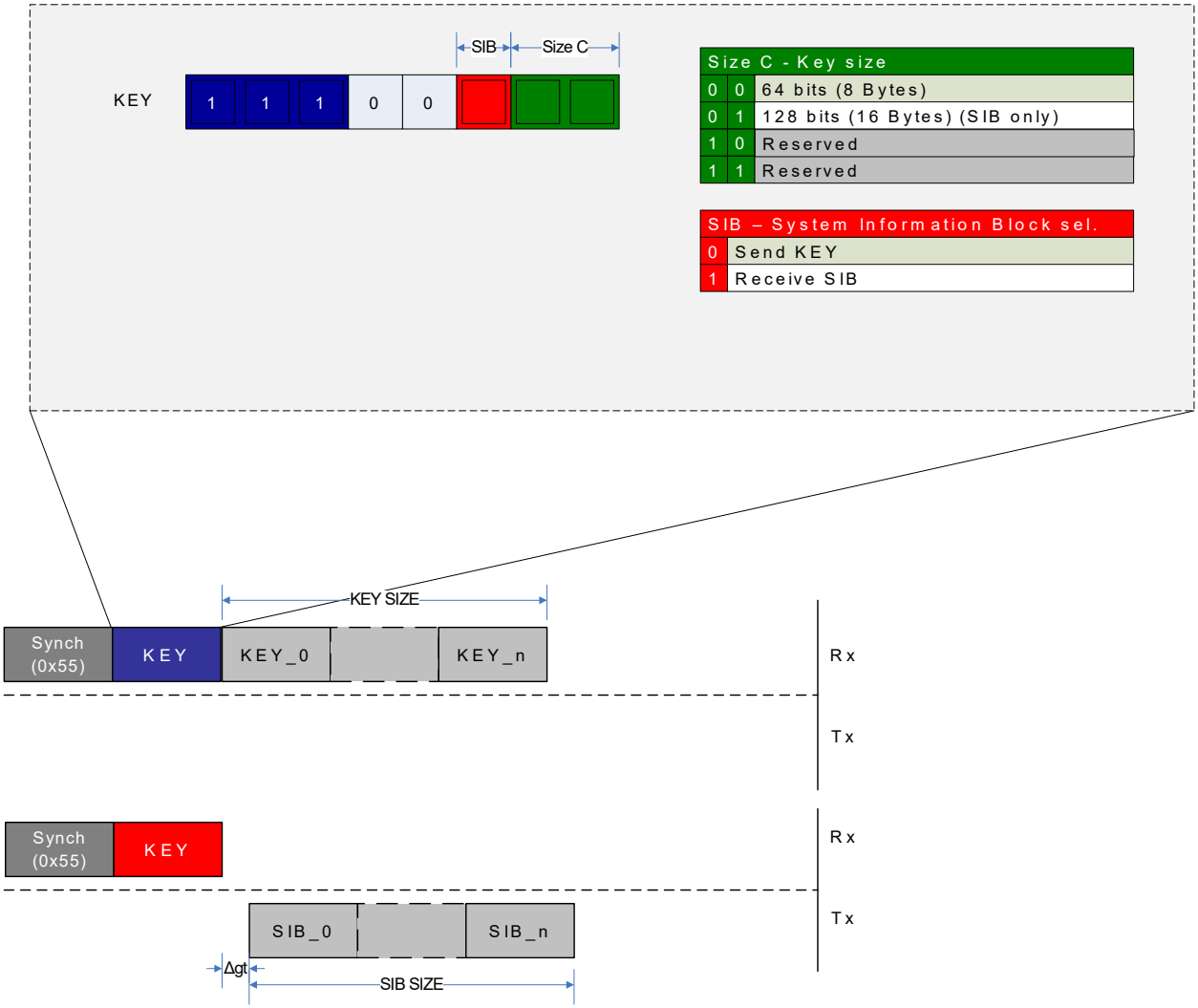

The Figure above shows the transmission of a KEY, and the reception of a SIB. In both cases, the `SIZE_C` field in the opcode determines the number of frames to be sent or received. There is no response after sending a `KEY` to the UPDI. When requesting the SIB, data will be transmitted from the UPDI according to the current Guard Time setting.

33.3.4 System Clock Measurement with UPDI

It is possible to use the UPDI to get a accurate measurement of the system clock frequency, by using the UPDI event connected to TCB with Input Capture capabilities. A recommended setup flow for this feature is given by the following steps:

- Set up TCB.CTRLB with setting CNTMODE=0x3, Input Capture frequency measurement mode. See for details.
- Write CAPTEI=1 in TCB.EVCTRL to enable Event Interrupt. Keep EDGE = 0 in TCB.EVCTRL.
- Configure the Event System as described in 33.3.8 Events
- For the SYNCH character used to generate the UPDI events, it is recommended to use a slow baud rate in the range of 10kbps - 50kbps to get a more accurate measurement on the value captured by the timer between each UPDI event. One particular thing is that if the capture is set up to trigger an interrupt, the first captured value should be ignored. The second captured value based on the input event should be used for the measurement. See the figure below for an example using 10kbps UPDI SYNCH character pulses, giving a capture window of 200µs for the Timer.
- It is possible to read out the captured value directly after the SYNCH character, by reading the TCB.CC register, or the value can be written to memory by the CPU once the capture is done.

Figure 33-17. UPDI System Clock Measurement Events

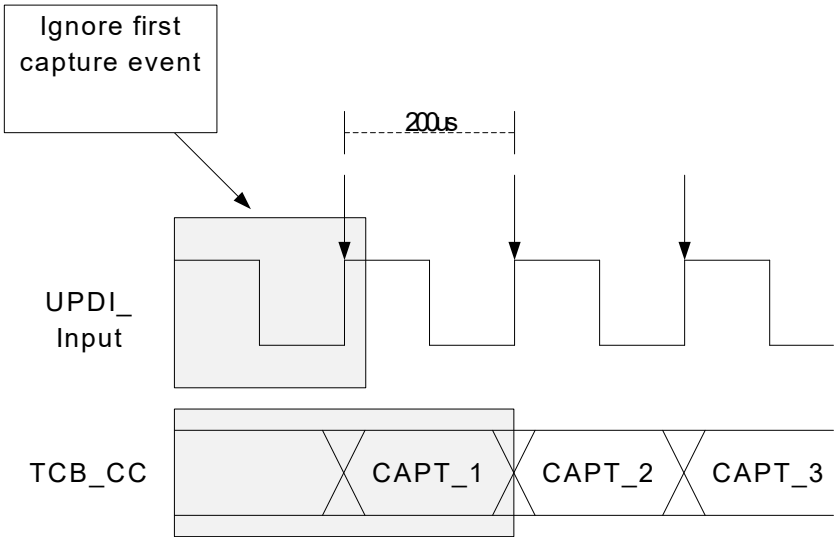

33.3.5 Interbyte Delay

When loading data with the UPDI, or reading out the System Information Block, the output data will normally come out with two IDLE bits between each transmitted byte for a multibyte transfer. Depending on the application on the receiver side, data might be coming out too fast when there is no extra IDLE bits between each byte. By enabling the IBDLY feature in UPDI.CTRLB, two extra stop bits will be inserted between each byte to relax the sampling time for the debugger. Interbyte delay works in the same way as guard time, by inserting extra IDLE bits, but only a fixed number of IDLE bits and only for multibyte transfers. The first transmitted byte after a direction change will be subject to the regular Guard Time before it is transmitted, and the interbyte delay is not added to this time.

Figure 33-18. Interbyte Delay exemple with LD and RPT

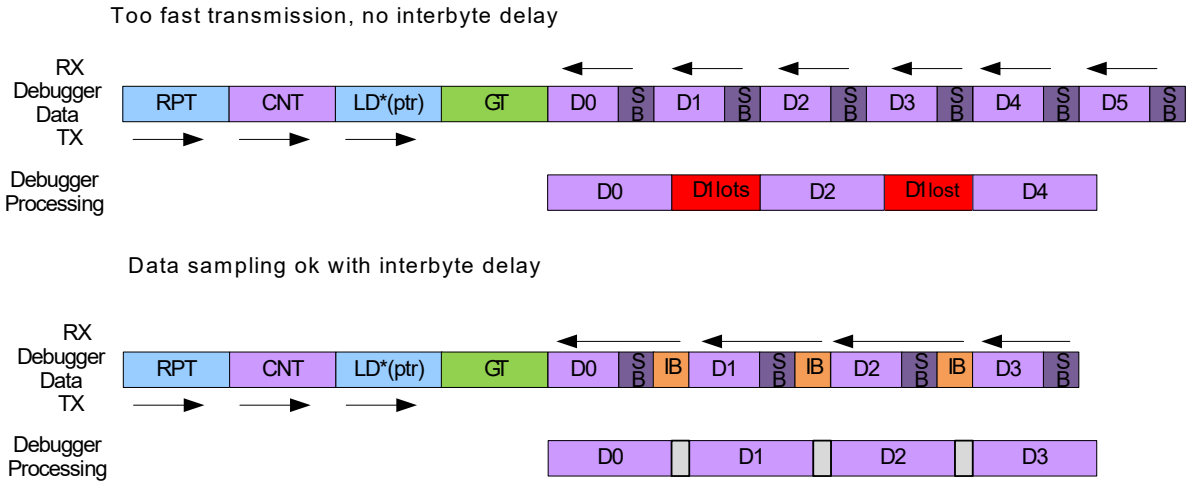

In Figure 33-18, GT denotes the Guard Time insertion, SB are stop bits and IB is the inserted interbyte delay. The rest of the frames are data and instructions.

33.3.6 System Information Block

The System Information Block (SIB) can be read out at any time by setting the SIB bit in the KEY instruction from 33.3.3.8 KEY - Set Activation KEY. The SIB provides a compact form of providing information for the debugger which is vital in identifying and setting up the proper communication channel with the part. The output of the SIB should be interpreted as ASCII symbols. KEY size field should be set to 16byte when reading out the complete SIB, and 8 byte size can be used to read out only the Family_ID. See Figure 33-19 for SIB format description, and which data that is available at different readout sizes.

Figure 33-19. System Information Block format

16	8	[Byte][Bits]	Field Name
		[6:0] [55:0]	Family_ID
		[7][7:0]	Reserved
		[10:8][23:0]	NVM_VERSION
		[13:11][23:0]	OCD_VERSION
		[14][7:0]	RESERVED
		[15][7:0]	DBG_OSC_FREQ

33.3.7 Enabling of KEY Protected Interfaces

Access to some internal interfaces and features are protected by the UPDI KEY mechanism. To activate a KEY, the correct KEY data must be transmitted by using the `KEY` instruction as described in KEY instruction. Table 33-5 describes the available KEYs, and the condition required when doing operation with the KEY active. There is no requirement when shifting in the KEY, but you would for instance normally run a Chiperase before enabling the NVMPROG KEY, to unlock the device for debug. But if the NVMPROGKEY is shifted in first, it will not be reset by shifting in the Chiperase KEY afterwards.

Table 33-5. KEY Activation Overview

KEY name	Description	Requirements for operation	Reset
Chiperase	Start NVM Chiperase. Clear Lockbits	None	UPDI Disable / UPDI Reset
NVMPROG	Activate NVM Programming	Lockbits Cleared. ASI_SYS_STATUS.NVMPROG set.	Programming Done / UPDI Reset
USERROW-Write	Program User Row on Locked part	Lockbits Set. ASI_SYS_STATUS.UROWPROG set	Write to KEY status bit / UPDI Reset

Table 33-6 gives an overview of the available KEY signatures that must be shifted in to activate the interfaces.

Table 33-6. KEY Activation Signatures

KEY name	KEY signature (LSB written first)	Size
Chiperase	0x4E564D4572617365	64bit
NVMPROG	0x4E564D50726F6720	64bit
USERROW-Write	0x4E564D5573267465	64bit

33.3.7.1 Chip Erase

The following steps should be followed to issue a Chip Erase.

1. Enter the CHIPERASE KEY by using the `KEY` instruction. See Table 33-6 for the CHIPERASE signature.
2. **Optional:** Read the Chip Erase bit in the AS Key Status register (CHIPERASE in UPDI.ASI_KEY_STATUS) to see that the KEY is successfully activated.
3. Write the Reset signature into the UPDI.ASI_RESET_REQ register. This will issue a System Reset.
4. Write 0x00 to the ASI Reset Request register (UPDI.ASI_RESET_REQ) to clear the System Reset.
5. Read the Lock Status bit in the ASI System Status register (LOCKSTATUS in UPDI.ASI_SYS_STATUS).
6. Chip Erase is done when LOCKSTATUS == 0 in UPDI.ASI_SYS_STATUS. If LOCKSTATUS == 1, go to point 5 again.

After a successful Chip Erase, the Lockbits will be cleared, and the UPDI will have full access to the system. Until Lockbits are cleared, the UPDI cannot access the system bus, and only CS-space operations can be performed. See 33.3.7.3 User Row Programming.

⚠ CAUTION During Chip Erase, the BOD is forced ON (ACTIVE=0x1 in BOD.CTRLA), and uses the BOD Level from the BOD Configuration fuse (LVL in BOD.CTRLB = LVL in FUSE.BODCFG). If the supply voltage V_{DD} is below that threshold level, the device is unserviceable until VDD is increased adequately.

33.3.7.2 NVM Programming

If the device is unlocked, it is possible to write directly to the NVM Controller using the UPDI - this will lead to unpredictable code execution if the CPU is active during the NVM programming. To avoid this, the following NVM Programming sequence should be executed.

1. Follow the Chiperase procedure as described in Chip Erase. If the part is already unlocked, this point can be skipped.
2. Enter the NVMPROG KEY by using the `KEY` instruction. See Table 33-6 for the NVMPROG signature.
3. **Optional:** Read the NVMPROG field in the KEY_STATUS register to see that the KEY has been activated.
4. Write the Reset signature into the ASI_RESET_REQ register. This will issue a System Reset.
5. Write 0x00 to the Reset signature in ASI_RESET_REQ register to clear the System Reset.
6. Read NVMPROG in ASI_SYS_STATUS.
7. NVM Programming can start when NVMPROG == 1 in the ASI_SYS_STATUS register. If NVMPROG == 0, go to point 6 again.
8. Write data to NVM through the UPDI.
9. Write the Reset signature into the ASI_RESET_REQ register. This will issue a System Reset.
10. Write 0x00 to the Reset signature in ASI_RESET_REQ register to clear the System Reset.
11. Programming is complete.

33.3.7.3 User Row Programming

The User Row Programming feature allows the user to program new values to the User Row (USERROW) on a locked device. To program with this functionality enabled, the following sequence should be followed.

1. Enter the USERROW-Write KEY located in Table 33-6 by using the `KEY` instruction. See Table 33-6 for the UROWWRITE signature.
2. **Optional:** Read the UROWWRITE bit field in UPDI.ASI_KEY_STATUS to see that the KEY has been activated.
3. Write the Reset signature into the UPDI.ASI_RESET_REQ register. This will issue a System Reset.
4. Write 0x00 to the Reset signature in UPDI.ASI_RESET_REQ register to clear the System Reset.
5. Read UROWPROG bit in UPDI.ASI_SYS_STATUS.
6. User Row Programming can start when UROWPROG == 1. If UROWPROG == 0, go to point 5 again.
7. The writable area has a size of one EEPROM page, 32 byte, and it is only possible to write User Row data to the first 32 byte addresses of the RAM. Addressing outside this memory range will result in a non executed write. The data will map 1:1 with the User Row space, when the data is copied into the User Row upon completion of the Programming sequence.
8. When all User Row data has been written to the RAM, write the UROWWRITEFINAL bit in UPDI.ASI_SYS_CTRLA.
9. Read the UROWPROG bit in UPDI.ASI_SYS_STATUS.
10. The User Row Programming is completed when UROWPROG == 0. If UROWPROG == 1, go to point 9 again.
11. Write the UROWWRITE bit in UPDI.ASI_KEY_STATUS.
12. Write the Reset signature into the UPDI.ASI_RESET_REQ register. This will issue a System Reset.
13. Write 0x00 to the Reset signature in UPDI.ASI_RESET_REQ register to clear the System Reset.
14. User Row Programming is complete.

It is not possible to read back data from the SRAM in this mode. Only writes to the first 32 bytes of the SRAM is allowed.

33.3.8 Events

The UPDI is connected to the Event System (EVSYS) as described in 14.5.3 ASYNCCH.

The UPDI can generate the following output events:

- SYNCH Character Positive Edge Event

This Event is set on the UPDI clock for each detected positive edge in the SYNCH character, and it is not possible to disable this event from the UPDI. The recommended application for this Event is system clock frequency measurement through the UPDI. Section 33.3.4 System Clock Measurement with UPDI provides the details on how to setup the system for this operation.

Related Links

14. EVSYS - Event System

33.3.9 Sleep Mode Operation

The UPDI physical layer runs independently of all sleep modes, and the UPDI is always accessible for a connected debugger independent of the device sleep mode. If the system enters a sleep mode that turns off the CPU clock, the UPDI will not be able to access the system bus and read memories and peripherals. The UPDI physical layer clock is unaffected by the sleep mode settings, as long as the UPDI is enabled. By reading the INSLEEP bit in UPDI.ASI_SYS_STATUS it is possible to monitor if the system domain is in sleep mode. The INSLEEP bit is set if the system is in IDLE sleep mode or deeper.

It is possible to prevent the system clock from stopping when going into sleep mode, by writing the CLKREQ bit in UPDI.ASI_SYS_CTRL to '1'. If this bit is set the system sleep mode state is emulated, and it is possible for the UPDI to access the system bus and read out peripheral registers even in the deepest sleep modes.

CLKREQ in UPDI.ASI_SYS_CTRL is by default '1', which means that default operation is keeping the system clock on during sleep modes.

33.4 Register Summary - UPDI

Offset	Name	Bit Pos.								
0x00	STATUSA	7:0	UPDIREV[3:0]							
0x01	STATUSB	7:0						PESIG[2:0]		
0x02	CTRLA	7:0	IBDLY		PARD	DTD	RSD	GTVAL[2:0]		
0x03	CTRLB	7:0				NACKDIS	CCDETDIS	UPDIDIS		
0x04 ... 0x06	Reserved									
0x07	ASI_KEY_STATUS	7:0			UROWWRITE	NVMPROG	CHIPERASE			
0x08	ASI_RESET_REQ	7:0	RSTREQ[7:0]							
0x09	ASI_CTRLA	7:0							UPDICLKSEL[1:0]	
0x0A	ASI_SYS_CTRLA	7:0							UROWWRITE_FINAL	CLKREQ
0x0B	ASI_SYS_STATUS	7:0			RSTSYS	INSLEEP	NVMPROG	UROWPROG		LOCKSTATUS
0x0C	ASI_CRC_STATUS	7:0						CRC_STATUS[2:0]		

33.5 Register Description

These registers are only readable through the UPDI with special instructions, and are NOT readable through the CPU.

Registers at offset addresses 0x0-0x3 are the UPDI Physical configuration registers

Registers at offset addresses 0x4-0xC are the ASI level registers.

33.5.1 Status A

Name: STATUSA
Offset: 0x00
Reset: 0x10
Property: -

Bit	7	6	5	4	3	2	1	0
	UPDIREV[3:0]							
Access	R	R	R	R	R	R	R	R
Reset	0	0	0	1	0	0	0	0

Bits 7:4 – UPDIREV[3:0] UPDI Revision
These bits are read-only and contain the revision of the current UPDI implementation.

33.5.2 Status B

Name: STATUSB
Offset: 0x01
Reset: 0x00
Property: -

Bit	7	6	5	4	3	2	1	0
						PESIG[2:0]		
Access	R	R	R	R	R	R	R	R
Reset	0	0	0	0	0	0	0	0

Bits 2:0 – PESIG[2:0] UPDI Error Signature
These bits describe the UPDI Error Signature, and is set when an internal UPDI error condition occurs. The PESIG field is cleared on a read from the debugger.

Table 33-7. Valid Error Signatures

PESIG[2:0]	Error Type	Error Description
0x0	No error	No error detected (Default)
0x1	Parity error	Wrong sampling of the parity bit
0x2	Frame error	Wrong Sampling of frame stop bits
0x3	Access Layer Timeout Error	UPDI can get no data or response from the Access layer. Examples of error cases are system domain in sleep or system domain reset.
0x4	Clock recovery error	Wrong sampling of frame start bit
0x5	-	Reserved
0x6	Reserved	Reserved
0x7	Contention error	Signalize Driving Contention on the UPDI RXD/TXD line.

33.5.3 Control A

Name: CTRLA
Offset: 0x02
Reset: 0x00
Property: -

Bit	7	6	5	4	3	2	1	0
	IBDLY		PARD	DTD	RSD	GTVAL[2:0]		
Access	R/W		R/W	R/W	R/W	R/W	R/W	R/W
Reset	0		0	0	0	0	0	0

Bit 7 – IBDLY Inter-Byte Delay Enable
Writing a '1' to this bit enables a fixed inter-byte delay between each data byte transmitted from the UPDI when doing multi-byte LD(S). The fixed length is two IDLE characters. Before the first transmitted byte will use the regular GT delay used for direction change.

Bit 5 – PARD Parity Disable
Writing this bit to '1' will disable parity detection in the UPDI by just ignoring the Parity bit. This feature is recommended only during testing.

Bit 4 – DTD Disable Timeout Detection
Setting this bit disables the timeout detection on the PHY layer, which requests a response from the ACC layer within a specified time (65536 UPDI clock cycles).

Bit 3 – RSD Response Signature Disable
Writing a '1' to this bit will disable any response signatures generated by the UPDI. This is to reduce the protocol overhead to a minimum when writing large blocks of data to the NVM space. Disabling the Response Signature should be used with caution, and only when the delay experienced by the UPDI when accessing the system bus is predictable, otherwise loss of data may occur.

Bits 2:0 – GTVAL[2:0] Guard Time Value
This bit field selects the Guard Time Value that will be used by the UPDI when the transmission mode switches from RX to TX. The Guard time is equal to the Baud Rate used in 1-Wire mode.

Value	Description
0x0	UPDI Guard Time: 128 cycles (default)
0x1	UPDI Guard Time: 64 cycles
0x2	UPDI Guard Time: 32 cycles
0x3	UPDI Guard Time: 16 cycles
0x4	UPDI Guard Time: 8 cycles
0x5	UPDI Guard Time: 4 cycles
0x6	UPDI Guard Time: 2 cycles
0x7	GT off (no extra Idle bits inserted)

33.5.4 Control B

Name: CTRLB
Offset: 0x03
Reset: 0x00
Property: -

Bit	7	6	5	4	3	2	1	0
				NACKDIS	CCDETDIS	UPDIDIS		
Access	R	R	R	R	R	R		
Reset	0	0	0	0	0	0		

Bit 4 – NACKDIS Disable NACK Response
Writing this bit to '1' disables the NACK signature sent by the UPDI if a System Reset is issued during an ongoing LD(S) and ST(S) operation.

Bit 3 – CCDETDIS Collision and Contention Detection Disable
If this bit is written to '0', contention detection is enabled for 1W mode. This means that the UPDI can detect a collision in an ongoing 1-Wire transmission.

Bit 2 – UPDIDIS UPDI Disable
Writing a '1' to this bit disables the UPDI PHY interface. The clock request from the UPDI is lowered, and the UPDI is reset. All UPDI PHY configurations and KEYs will be reset when the UPDI is disabled.

33.5.5 ASI Key Status

Name: ASI_KEY_STATUS
Offset: 0x07
Reset: 0x00
Property: -

Bit	7	6	5	4	3	2	1	0
			UROWWRITE	NVMPROG	CHIPERASE			
Access			R	R	R			
Reset			0	0	0			

Bit 5 – UROWWRITE User Row Write Key Status
This bit is set to '1' if the UROWWRITE KEY is active. Otherwise this bit reads as zero.

Bit 4 – NVMPROG NVM Programming
This bit is set to '1' if the NVMPROG KEY is active. This bit is automatically reset after the programming sequence is done. Otherwise this bit reads as zero.

Bit 3 – CHIPERASE Chip Erase
This bit is set to '1' if the CHIPERASE KEY is active. This bit will automatically be reset when the chip erase sequence is completed. Otherwise this bit reads as zero.

33.5.6 ASI Reset Request

Name: ASI_RESET_REQ
Offset: 0x08
Reset: 0x00
Property: -

Bit	7	6	5	4	3	2	1	0
	RSTREQ[7:0]							
Access	R/W	R/W	R/W	R/W	R/W	R/W	R/W	R/W
Reset	0	0	0	0	0	0	0	0

Bits 7:0 – RSTREQ[7:0] Reset Request
A Reset is signalized to the System when writing the Reset signature 0x59h to this address.
Writing any other signature to this register will clear the Reset.
When reading this register, reading bit RSTREQ[0] will tell if the UPDI is holding an active Reset on the system. If this bit is '1', the UPDI has an active Reset request to the system. All other bits will read as '0'.
The UPDI will not be reset when issuing a System Reset from this register.

33.5.7 ASI Control A

Name: ASI_CTRLA
Offset: 0x09
Reset: 0x02
Property: -

Bit	7	6	5	4	3	2	1	0
							UPDICLKSEL[1:0]	
Access							R/W	R/W
Reset							1	1

Bits 1:0 – UPDICLKSEL[1:0] UPDI Clock Select
Writing these bits selects the UPDI clock output frequency. Default setting after reset and enable is 4MHz. Any other clock output selection is only recommended when the BOD is at the highest level. For all other BOD settings, the default 4MHz selection is recommended.

Value	Description
0x0	Reserved
0x1	16MHz UPDI clock
0x2	8MHz UPDI clock
0x3	4MHz UPDI clock (Default Setting)

33.5.8 ASI System Control A

Name: ASI_SYS_CTRLA
Offset: 0x0A
Reset: 0x00
Property: -

Bit	7	6	5	4	3	2	1	0
							UROWWRITE_FINAL	CLKREQ
Access	R	R	R	R	R	R	R/W	R/W
Reset	0	0	0	0	0	0	0	0

Bit 1 – UROWWRITE_FINAL User Row Programming Done
This bit should be written through the UPDI when the user row data has been written to the RAM. Writing this bit will start the process of programming the user row data to the FLASH.
If this bit is written before the User Row code is written to RAM by the UPDI, the CPU will progress without the written data.
This bit is only writable if the Userrow-write KEY is successfully decoded.

Bit 0 – CLKREQ Request System Clock
If this bit is written to '1', the ASI is requesting the system clock, independent of system sleep modes. This makes it possible for the UPDI to access the ACC layer, also if the system is in sleep mode.
Writing a zero to this bit will lower the clock request.
This bit will be reset when the UPDI is disabled.
This bit is set by default when the UPDI is enabled in any mode (Fuse, 12V).

33.5.9 ASI System Status

Name: ASI_SYS_STATUS
Offset: 0x0B
Reset: 0x01
Property: -

Bit	7	6	5	4	3	2	1	0
			RSTSYS	INSLEEP	NVMPROG	UROWPROG		LOCKSTATUS
Access			R	R	R	R		R
Reset			0	0	0	0		1

Bit 5 – RSTSYS System Reset Active
If this bit is set, there is an active Reset on the system domain. If this bit is cleared, the system is not in Reset.
This bit is cleared on read.
A reset held from the ASI_RESET_REQ register will also affect this bit.

Bit 4 – INSLEEP System Domain in Sleep
If this bit is set, the system domain is in IDLE or deeper sleep mode. If this bit is cleared, the system is not in sleep.

Bit 3 – NVMPROG Start NVM Programming
If this bit is set, NVM Programming can start from the UPDI.
When the UPDI is done, it must reset the system through the UPDI Reset Register.

Bit 2 – UROWPROG Start User Row Programming
If this bit is set, User Row Programming can start from the UPDI.
When the UPDI is done, it must write the UROWWRITE_FINAL bit in ASI_SYS_CTRLA.

Bit 0 – LOCKSTATUS NVM Lock Status
If this bit is set, the device is locked. If a Chiperase is done, and the Lockbits are cleared, this bit will read as zero.

33.5.10 ASI CRC Status

Name: ASI_CRC_STATUS
Offset: 0x0C
Reset: 0x00
Property: -

Bit	7	6	5	4	3	2	1	0
						CRC_STATUS[2:0]		
Access	R	R	R	R	R	R	R	R
Reset	0	0	0	0	0	0	0	0

Bits 2:0 – CRC_STATUS[2:0] CRC Execution Status
These bits signalize the status of the CRC conversion. The bits are one-hot encoded.

Value	Description
0x0	Not enabled
0x1	CRC enabled, busy
0x2	CRC enabled, done with OK signature
0x4	CRC enabled, done with FAILED signature
Other	Reserved

34. Electrical Characteristics

34.1 Disclaimer

All typical values are measured at T = 25°C and V_{DD}=3V unless otherwise specified. All minimum and maximum values are valid across operating temperature and voltage unless otherwise specified.

34.2 Absolute Maximum Ratings

Stresses beyond those listed in this section may cause permanent damage to the device. This is a stress rating only and functional operation of the device at these or other conditions beyond those indicated in the operational sections of this specification is not implied. Exposure to absolute maximum rating conditions for extended periods may affect device reliability.

Table 34-1. Absolute Maximum Ratings

Symbol	Description	Conditions	Min.	Max.	Unit
V_{DD}	Power Supply Voltage		-0.5	6	V
I_{VDD}	Current into a V_{DD} pin	T=[-40, 85]°C	-	200	mA
		T=[85, 125]°C	-	100	mA
I_{GND}	Current out of a GND pin	T=[-40, 85]°C	-	200	mA
		T=[85, 125]°C	-	100	mA
V_{RST}	RESET pin voltage with respect to GND		-0.5	13	V
V_{PIN}	Pin voltage with respect to GND		-0.5	V_{DD}+0.5	V
I_{PIN}	I/O pin sink/source current		-40	40	mA
I_{c1}(1)	I/O pin injection current except RESET pin	V_{pin}<GND-0.6V or 5.5V<V_{pin}<=6.1V 4.9V<V_{DD}<=5.5V	-1	1	mA
I_{c2}(1)	I/O pin injection current except RESET pin	V_{pin}<GND-0.6V or V_{pin}<=5.5V V_{DD}<=4.9V	-15	15	mA
I_{ctot}	Sum of I/O pin injection current except RESET pin		-45	45	mA
$T_{storage}$	Storage temperature		-65	150	°C

Note:

1. – If Vpin is lower than GND-0.6V, then a current limiting resistor is required. The negative DC injection current limiting resistor is calculated as R = (GND-0.6V – V_{pin})/I_{Cn}.
   – If Vpin is greater than VDD+0.6V, then a current limiting resistor is required. The positive DC injection current limiting resistor is calculated as R = (V_{pin}-(VDD+0.6))/I_{Cn}.

34.3 General Operating Ratings

The device must operate within the ratings listed in this section in order for all other electrical characteristics and typical characteristics of the device to be valid.

Table 34-2. General Operating Conditions

Symbol	Description	Condition	Min.	Max.	Unit
V_{DD}	Operating Supply Voltage		1.8(2)	5.5	V
T	Operating temperature range(1)	Standard temperature range	-40	105	°C
		Extended temperature range(3)	-40	125	

Note:

1. Refer to the device ordering codes for the device temperature range.
2. Operation is ensured down to 1.8V or BOD triggering level, V_{BOD}. V_{BOD} may be below minimum Operating Supply Voltage for some devices. Where this is the case, the device is tested down to $V_{DD} = V_{BOD}$ during production.
   - During Chip Erase the BOD is forced ON. If the supply voltage V_{DD} is below the configured V_{BOD}, the Chip Erase will fail. See 33.3.7.1 Chip Erase.
3. Extended temperature range is only ensured down to 2.7V.

Table 34-3. Operating Voltage and Frequency

Symbol	Description	Condition	Min.	Max.	Unit
CLK_CPU	Operating system clock frequency	V_{DD}=[1.8, 5.5]V T=[-40, 105]°C(1)	0	5	MHz
		V_{DD}=[2.7, 5.5]V T=[-40, 105]°C(2)	0	10	
		V_{DD}=[4.5, 5.5]V T=[-40, 105]°C(3)	0	20	
		V_{DD}=[2.7, 5.5]V T=[-40, 125]°C(2)	0	8	
		V_{DD}=[4.5, 5.5]V T=[-40, 125]°C(3)	0	16	

Note:

1. Operation ensured down to BOD triggering level, V_{BOD} with BODLEVEL0.
2. Operation ensured down to BOD triggering level, V_{BOD} with BODLEVEL2.
3. Operation ensured down to BOD triggering level, V_{BOD} with BODLEVEL7.

The maximum CPU clock frequency depends on V_{DD}. As shown in the following figure, the Maximum Frequency vs. V_{DD} is linear between $1.8V < V_{DD} < 2.7V$ and $2.7V < V_{DD} < 4.5V$.

Figure 34-1. Maximum Frequency vs. V_{DD} for [-40, 105]°C

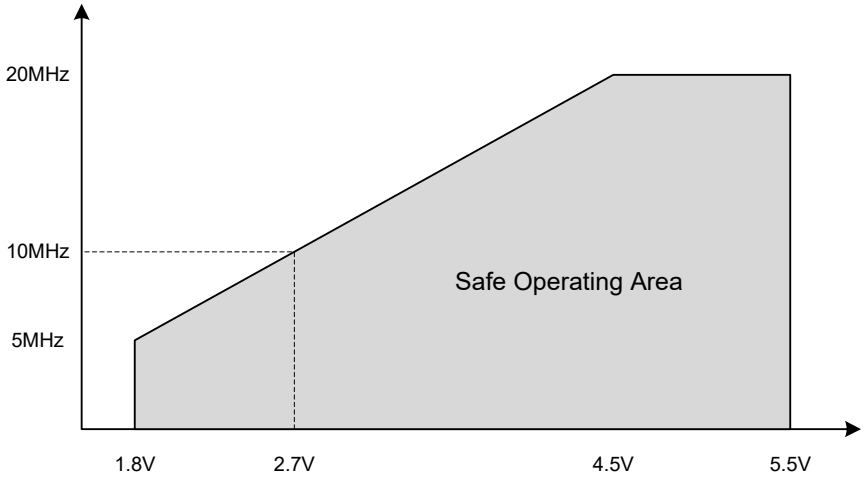

34.4 Power Consumption for ATtiny416

The values are measured power consumption under the following conditions, except where noted:

- V_{DD}=3V
- T=25°C
- OSC20M used as system clock source, except where otherwise specified
- System power consumption measured with peripherals disabled and without I/O drive.

Table 34-4. Power consumption in Active and Idle mode

Mode	Description	Condition		Typ.	Max.	Unit
Active	Active power consumption	CLK_CPU=20MHz (OSC20M)	V_{DD}=5V	9.0	-	mA
		CLK_CPU=10MHz (OSC20M div2)	V_{DD}=5V	4.8	-	mA
			V_{DD}=3V	2.7	-	mA
		CLK_CPU=5MHz (OSC20M div4)	V_{DD}=5V	2.8	-	mA
			V_{DD}=3V	1.6	-	mA
			V_{DD}=2V	1.0	-	mA
		CLK_CPU=32KHz (OSCULP32K)	V_{DD}=5V	18	-	µA
			V_{DD}=3V	10	-	µA
			V_{DD}=2V	7	-	µA

.....continued						
Mode	**Description**	**Condition**		**Typ.**	**Max.**	**Unit**
Idle	Idle power consumption	CLK_CPU=20MHz (OSC20M)	V_{DD}=5V	2.8	-	mA
		CLK_CPU=10MHz (OSC20M div2)	V_{DD}=5V	1.7	-	mA
			V_{DD}=3V	0.9	-	mA
		CLK_CPU=5MHz (OSC20M div4)	V_{DD}=5V	1.2	-	mA
			V_{DD}=3V	0.6	-	mA
			V_{DD}=2V	0.4	-	mA
		CLK_CPU=32KHz (OSCULP32K)	V_{DD}=5V	5.4	-	µA
			V_{DD}=3V	2.6	-	µA
			V_{DD}=2V	1.7	-	µA

Table 34-5. Power consumption in Power-down, Standby and Reset mode

Mode	Description	Condition		Typ. 25°C	Max. 85°C	Max. 125°C	Unit
Standby	Standby power consumption	RTC running at 1.024kHz from external XOSC32K (CL=7.5pF)	V_{DD}=3V	0.69	-	-	µA
		RTC running at 1.024kHz from internal OSCULP32K	V_{DD}=3V	0.71	6.0	8.0	µA
Power Down/ Standby	Power down/Standby power consumption are the same when all peripherals are stopped	All peripherals stopped	V_{DD}=3V	0.1	5.0	7.0	µA
Reset	Reset power consumption	Reset line pulled down	V_{DD}=3V	100	-	-	µA

34.5 Power Consumption for ATtiny816

The values are measured power consumption under the following conditions, except where otherwise specified:

- V_{DD}=3V
- T=25°C
- OSC20M used as system clock source

Table 34-6. Power consumption in Active and Idle mode

Mode	Description	Condition		Typ.	Max.	Unit
Active	Active power consumption	CLK_CPU=20MHz (OSC20M)	V_{DD}=5V	9.6	-	mA
		CLK_CPU=10MHz (OSC20M div2)	V_{DD}=5V	5.1	-	mA
			V_{DD}=3V	2.8	-	mA
		CLK_CPU=5MHz (OSC20M div4)	V_{DD}=5V	3.0	-	mA
			V_{DD}=3V	1.6	-	mA
			V_{DD}=2V	1.1	-	mA
		CLK_CPU=32KHz (OSCULP32K)	V_{DD}=5V	19	-	µA
			V_{DD}=3V	11	-	µA
			V_{DD}=2V	7.3	-	µA
Idle	Idle power consumption	CLK_CPU=20MHz (OSC20M)	V_{DD}=5V	4.2	-	mA
		CLK_CPU=10MHz (OSC20M div2)	V_{DD}=5V	2.4	-	mA
			V_{DD}=3V	1.3	-	mA
		CLK_CPU=5MHz (OSC20M div4)	V_{DD}=5V	1.5	-	mA
			V_{DD}=3V	0.8	-	mA
			V_{DD}=2V	0.5	-	mA
		CLK_CPU=32KHz (OSCULP32K)	V_{DD}=5V	8.0	-	µA
			V_{DD}=3V	4.0	-	µA
			V_{DD}=2V	2.6	-	µA

Table 34-7. Power consumption in Power-down, Standby and Reset mode

Mode	Description	Condition		Typ. 25°C	Max. 85°C	Max. 125°C	Unit
Standby	Standby power consumption	RTC running at 1.024kHz from external XOSC32K (CL=7.5pF)	V_{DD}=3V	0.69	-	-	µA
		RTC running at 1.024kHz from internal OSCULP32K	V_{DD}=3V	0.71	6.0	8.0	µA
Power Down/ Standby	Power down/Standby power consumption are the same when all peripherals are stopped	All peripherals stopped	V_{DD}=3V	0.1	5.0	7.0	µA
Reset	Reset power consumption	Reset line pulled down	V_{DD}=3V	100	-	-	µA

34.6 Wake-Up Time

Wake-up time from sleep mode is measured from the edge of the wake-up signal to the first instruction executed.

Operating conditions:

- V_{DD}=3V

- T=25°C
- OSC20M as system clock source, unless otherwise specified.

Table 34-8. Start-up, Reset, and Wake-Up Time from OSC20M

Symbol	Description	Condition	Min.	Typ.	Max.	Unit
t_{wakeup}	Start-up time from any Reset release		-	200	-	µs
	Wake-up from Idle mode	OSC20M @ 20MHz; V_{DD}=5V	-	1	-	
		OSC20M @ 10MHz; V_{DD}=3V	-	2	-	
		OSC20M @ 5MHz; V_{DD}=2V	-	4	-	
	Wake-up from Standby and Power Down mode		-	10	-	

34.7 Peripherals Power Consumption

The table below can be used to calculate the additional current consumption for the different I/O peripherals in the various operating modes.

Operating conditions:

- V_{DD}=3V
- T=25°C
- OSC20M at 1MHz used as system clock source, except where otherwise specified.

Table 34-9. Peripherals Power Consumption

Peripheral	Conditions	Typ.(1)	Unit
BOD	Continuous	19	µA
	Sampling @ 1kHz	1.2	
TCA	16bit count @ 1MHz	12.6	µA
TCB	16bit count @ 1MHz	7.4	µA
RTC	16bit count @ OSCULP32K	1.2	µA
WDT (including OSCULP32K)		0.7	µA
OSC20M		125	µA
AC	Fast Mode(2)	92	µA
	Low Power Mode(2)	45	µA
ADC	50ksps	325	µA
	100ksps	340	µA
XOSC32K	C_L=7.5pF	0.5	µA
OSCULP32K		0.4	µA
USART	Enable @ 9600 Baud	13	µA
SPI (Master)	Enable @ 100kHz	2.1	µA
TWI (Master)	Enable @ 100kHz	23.9	µA
TWI (Slave)	Enable @ 100kHz	17.1	µA
Flash programming	Erase Operation	1.5	mA
	Write Operation	3.0	

Note:

1. Current consumption of the module only. To calculate the total power consumption of the system, add this value to the base power consumption as listed in *Power Consumption*.
2. CPU in Standby mode.

34.8 BOD and POR Characteristics

Table 34-10. Power Supply Characteristics

Symbol	Description	Condition	Min.	Typ.	Max.	Unit
SRON	Power-on Slope		-	-	100	V/ms

Table 34-11. Power On Reset (POR) Characteristics

Symbol	Description	Condition	Min.	Typ.	Max.	Unit
V_{POR}	POR threshold voltage on V_{DD} falling	V_{DD} falls/rises at 0.5V/ms or slower	0.8	-	1.6	V
	POR threshold voltage on V_{DD} rising		1.4	-	1.8	

Table 34-12. Brownout Detection (BOD) Characteristics

Symbol	Description	Condition	Min.	Typ.	Max.	Unit
V_{BOD}	BOD triggering level (falling/rising)	BODLEVEL7	3.9	4.2	4.5	V
		BODLEVEL2	2.4	2.6	2.9	
		BODLEVEL0	1.7	1.8	2.0	
V_{INT}	Interrupt level 0	Percentage above the selected BOD level	-	4	-	%
	Interrupt level 1		-	13	-	
	Interrupt level 2		-	25	-	
V_{HYS}	Hysteresis	BODLEVEL7	-	80	-	mV
		BODLEVEL2	-	40	-	
		BODLEVEL0	-	25	-	
T_{BOD}	Detection time	Continuous	-	7	-	µs
		Sampled, 1kHz	-	1	-	ms
		Sampled, 125Hz	-	8	-	
T_{start}	Start-up time	Time from enable to ready	-	40	-	µs

34.9 External Reset Characteristics

Table 34-13. External Reset Characteristics

Mode	Description	Condition	Min.	Typ.	Max.	Unit
V_{HVRST}	$\overline{\text{RESET}}$ pin threshold for High-Voltage Reset		11.5	-	12.5	V
V_{RST_VIH}	Input High Voltage for $\overline{\text{RESET}}$		$0.8 \times V_{DD}$	-	$V_{DD}+0.2$	
V_{RST_VIL}	Input Low Voltage for $\overline{\text{RESET}}$		-0.2	-	$0.2 \times V_{DD}$	
t_{RST}	Minimum pulse width on $\overline{\text{RESET}}$ pin		2.5	-	-	µs

.....continued						
Mode	**Description**	**Condition**	**Min.**	**Typ.**	**Max.**	**Unit**
R_{RST}	$\overline{\text{RESET}}$ pull-up resistor	V_{Reset}=0V	20	-	60	kΩ

34.10 Oscillators and Clocks

Operating conditions:

- V_{DD}=3V, except where specified otherwise.

Table 34-14. 20MHz Internal Oscillator (OSC20M) Characteristics

Symbol	Description	Condition		Min.	Typ.	Max.	Unit
f_{OSC20M}	Accuracy with 16MHz and 20MHz Frequency Selection relative to the factory-stored frequency value	Factory calibrated V_{DD}=3V(1)	T=[0, 70]°C, V_{DD}=[1.8, 4.5]V(3)	-2.0	-	2.0	%
		Factory calibrated V_{DD}=5V(1)	T=[0, 70]°C, V_{DD}=[4.5, 5.5]V(3)	-2.0	-	2.0	
	Accuracy with 16MHz and 20MHZ Frequency Selection	Factory calibrated	T=25°C, 3.0V	-3.0	-	3.0	%
			T=[0, 70]°C, V_{DD}=[1.8, 3.6]V(3)	-4.0	-	4.0	
			Full operation range(3)	-5.0	-	5.0	
f_{CAL}	User calibration range	OSC16M(2)		14.5	-	17.5	MHz
		OSC20M(2)		18.5	-	21.5	MHz
%CAL	Calibration step size			-	1.5	-	%
DC	Duty cycle			-	50	-	%
T_{start}	Start-up time	Within 2% accuracy		-	8	-	µs

Note:

1. See also description of OSC20M on calibration.
2. Oscillator Frequencies above speed specification must be divided so that CPU clock always is within specification.
3. These values are based on characterization and not covered by production testlimits.

Table 34-15. 32.768kHz Internal Oscillator (OSCULP32K) Characteristics

Symbol	Description	Condition	Condition	Min.	Typ.	Max.	Unit
$f_{OSCULP32K}$	Accuracy	Factory calibrated	T=25°C, 3.0V	-3	-	3	%
			T=[0, 70]°C, V_{DD}=[1.8, 3.6]V(1)	-10	-	+10	
			Full operation range(1)	-30	-	+30	
DC	Duty cycle			-	50	-	%
T_{start}	Start-up time			-	250	-	µs

Note:

1. These values are based on characterization and not covered by production testlimits.

Table 34-16. 32.768kHz External Crystal Oscillator (XOSC32K) Characteristics

Symbol	Description	Condition	Min.	typ	Max.	Unit
F_{out}	Frequency		-	32.768	-	kHz
T_{start}	Startup time	C_L=7.5pF	-	300	-	ms
C_L	Crystal load capacitance		7.5	-	12.5	pF
C_{TOSC1}	Parasitic capacitor load		-	5.5	-	pF
C_{TOSC2}			-	5.5	-	pF
ESR	Equivalent Series Resistance - Safety Factor=3	C_L=7.5pF	-	-	80	kΩ
		C_L=12.5pF	-	-	40	

Figure 34-2. External Clock Waveform Characteristics

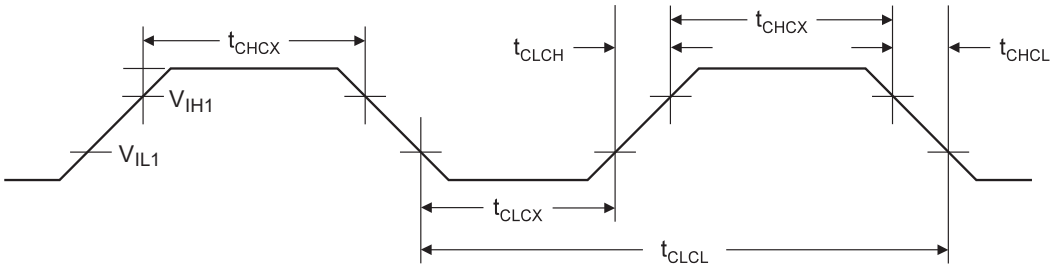

Table 34-17. External Clock Characteristics

Symbol	Description	Condition	V_{DD}=[1.8, 5.5]V		V_{DD}=[2.7, 5.5]V		V_{DD}=[4.5, 5.5]V		Unit
			Min.	Max.	Min.	Max.	Min.	Max.	
f_{CLCL}	Frequency		0	5.0	0.0	10.0	0.0	20.0	MHz
t_{CLCL}	Clock Period		200	-	100	-	50	-	ns
t_{CHCX}	High Time		80	-	40	-	20	-	ns
t_{CLCX}	Low Time		80	-	40	-	20	-	ns

Related Links

10.3.4.1.1 16/20MHz Oscillator (OSC20M)

34.11 I/O Pin Characteristics

Table 34-18. I/O Pin Characteristics (T_A=[-40, 105]°C, V_{DD}=[1.8, 5.5]V Unless Otherwise Noted)

Symbol	Description	Condition	Min.	Typ.	Max.	Unit
V_{IL}	Input low-voltage, except $\overline{\text{RESET}}$ pin as I/O		-0.2	-	0.3×V_{DD}	V
V_{IH}	Input high-voltage, except $\overline{\text{RESET}}$ pin as I/O		0.7×V_{DD}	-	V_{DD}+0.2V	V
I_{IH} / I_{IL}	I/O pin Input leakage current, except $\overline{\text{RESET}}$ pin as I/O	V_{DD}=5.5V, Pin high	-	< 0.05	-	µA
		V_{DD}=5.5V, Pin low	-	< 0.05	-	

.....continued

Symbol	Description	Condition	Min.	Typ.	Max.	Unit
V_{OL}	I/O pin drive strength	V_{DD}=1.8V, I_{OL}=1.5 mA	-	-	0.36	V
		V_{DD}=3.0V, I_{OL}=7.5 mA	-	-	0.6	
		V_{DD}=5.0V, I_{OL}=15 mA	-	-	1	
V_{OH}	I/O pin drive strength	V_{DD}=1.8V, I_{OH}=1.5 mA	1.44	-	-	V
		V_{DD}=3.0V, I_{OH}=7.5 mA	2.4	-	-	
		V_{DD}=5.0V, I_{OH}=15 mA	4	-	-	
I_{total}	Maximum combined I/O sink current per pin group(1)		-	-	100	mA
	Maximum combined I/O source current per pin group(1)		-	-	100	
V_{IL2}	Input low-voltage on $\overline{\text{RESET}}$ pin as I/O		-0.2	-	0.3×V_{DD}	V
V_{IH2}	Input high-voltage on $\overline{\text{RESET}}$ pin as I/O		0.7×V_{DD}	-	V_{DD}+0.2V	V
V_{OL2}	I/O pin drive strength on $\overline{\text{RESET}}$ pin as I/O	V_{DD}=1.8V, I_{OL}=0.1 mA	-	-	0.36	V
		V_{DD}=3.0V, I_{OL}=0.25 mA	-	-	0.6	
		V_{DD}=5.0V, I_{OL}=0.5 mA	-	-	1	
V_{OH2}	I/O pin drive strength on $\overline{\text{RESET}}$ pin as I/O	V_{DD}=1.8V, I_{OH}=0.1 mA	1.44	-	-	V
		V_{DD}=3.0V, I_{OH}=0.25 mA	2.4	-	-	
		V_{DD}=5.0V, I_{OH}=0.5 mA	4	-	-	
t_{RISE}	Rise time	V_{DD}=3.0V, load=20 pF	-	2.5	-	ns
		V_{DD}=5.0V, load=20 pF	-	1.5	-	
t_{FALL}	Fall time	V_{DD}=3.0V, load=20 pF	-	2.0	-	ns
		V_{DD}=5.0V, load=20 pF	-	1.3	-	
C_{pin}	I/O pin capacitance except TOSC and TWI pins		-	3	-	pF
C_{pin}	I/O pin capacitance on TOSC pins		-	5.5	-	pF
C_{pin}	I/O pin capacitance on TWI pins		-	10	-	pF
R_p	Pull-up resistor		20	35	50	kΩ

Note:

1. Pin group A (PA[7:0]), pin group B (PB[7:0]). The combined continuous sink/source current for all I/O ports should not exceed the limits.

34.12 USART

Figure 34-3. USART in SPI Mode - Timing Requirements in Master Mode

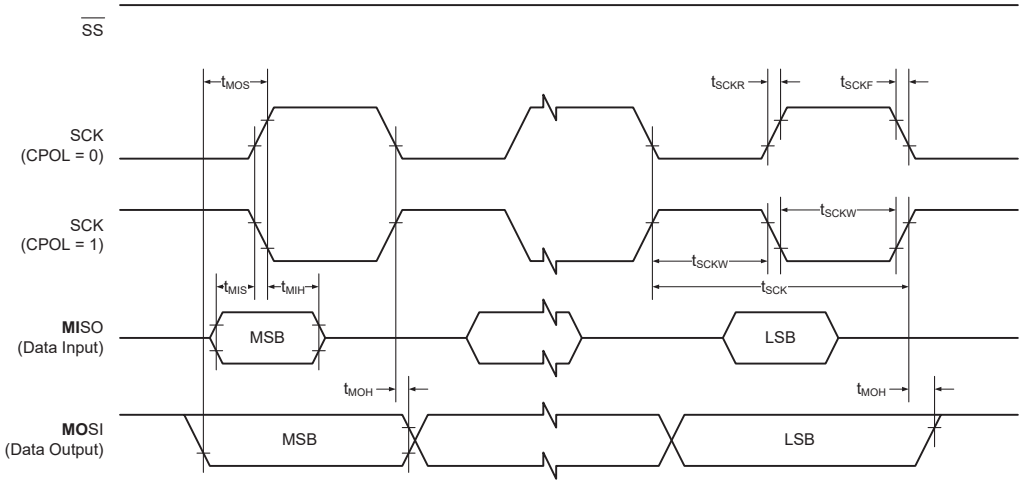

Figure 34-4. USART in SPI Mode - Timing Requirements in Slave Mode

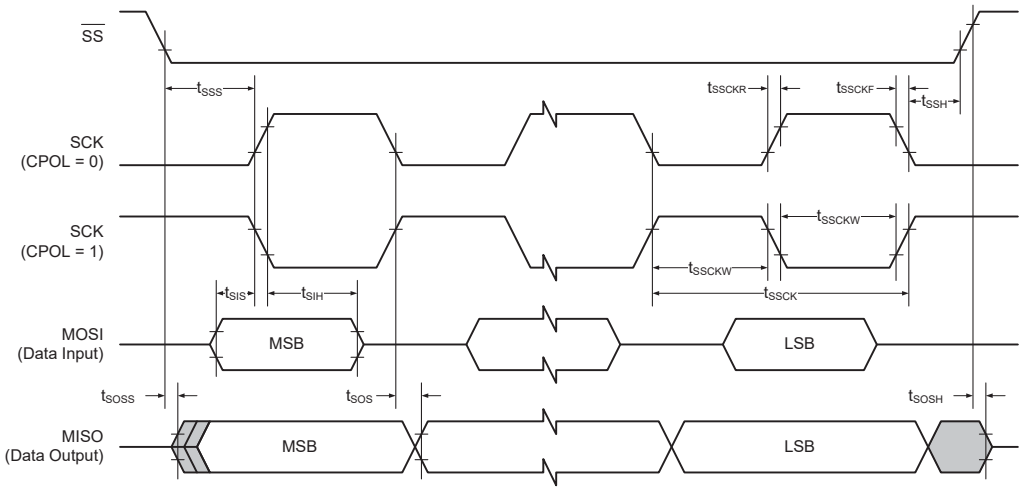

Table 34-19. USART in SPI Mode - Timing Characteristics

Symbol	Description	Condition	Min.	Typ.	Max.	Unit
f_{SCK}	SCK clock frequency	Master	-	-	10	MHz
t_{SCK}	SCK period	Master	100	-	-	ns
t_{SCKW}	SCK high/low width	Master	-	$0.5 \times t_{SCK}$	-	ns
t_{SCKR}	SCK rise time	Master	-	2.7	-	ns
t_{SCKF}	SCK fall time	Master	-	2.7	-	ns
t_{MIS}	MISO setup to SCK	Master	-	10	-	ns
t_{MIH}	MISO hold after SCK	Master	-	10	-	ns
t_{MOS}	MOSI setup to SCK	Master	-	$0.5 \times t_{SCK}$	-	ns
t_{MOH}	MOSI hold after SCK	Master	-	1.0	-	ns

34.13 SPI

Figure 34-5. SPI - Timing Requirements in Master Mode

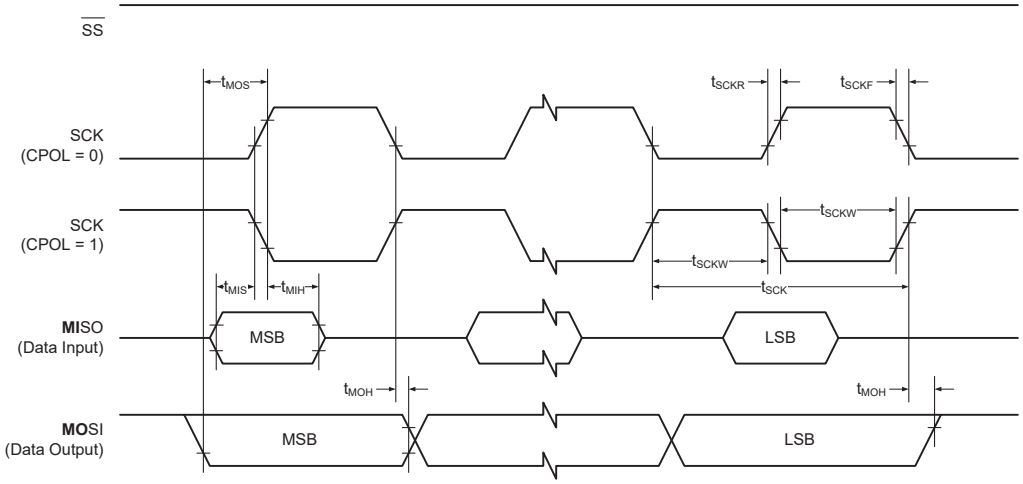

Figure 34-6. SPI - Timing Requirements in Slave Mode

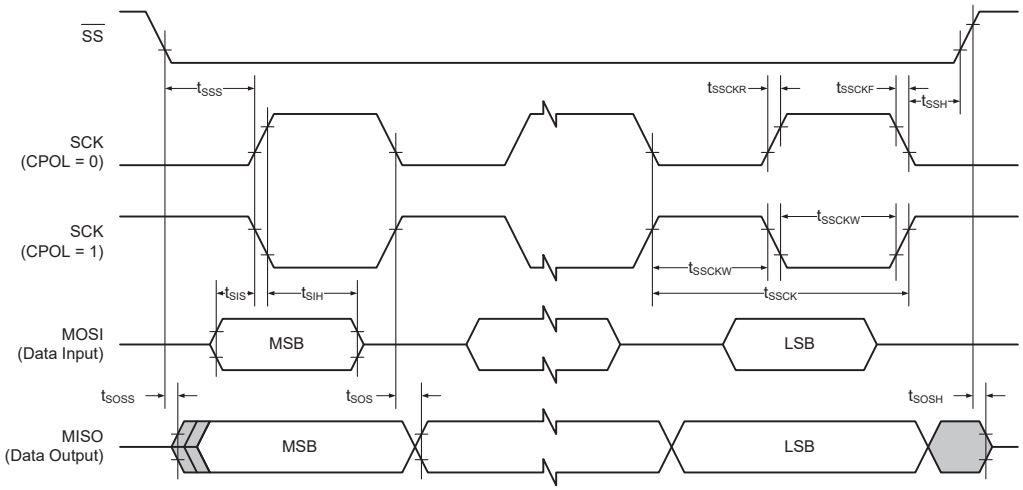

Table 34-20. SPI - Timing Characteristics

Symbol	Description	Condition	Min.	Typ.	Max.	Unit
f_{SCK}	SCK clock frequency	Master	-	-	10	MHz
t_{SCK}	SCK period	Master	100	-	-	ns
t_{SCKW}	SCK high/low width	Master	-	0.5*SCK	-	ns
t_{SCKR}	SCK rise time	Master	-	2.7	-	ns
t_{SCKF}	SCK fall time	Master	-	2.7	-	ns
t_{MIS}	MISO setup to SCK	Master	-	10	-	ns
t_{MIH}	MISO hold after SCK	Master	-	10	-	ns
t_{MOS}	MOSI setup to SCK	Master	-	0.5*SCK	-	ns
t_{MOH}	MOSI hold after SCK	Master	-	1.0	-	ns
f_{SSCK}	Slave SCK clock frequency	Slave	-	-	5	MHz

.....continued

Symbol	Description	Condition	Min.	Typ.	Max.	Unit
t_{SSCK}	Slave SCK Period	Slave	4*t Clkper	-	-	ns
t_{SSCKW}	SCK high/low width	Slave	2*t Clkper	-	-	ns
t_{SSCKR}	SCK rise time	Slave	-	-	1600	ns
t_{SSCKF}	SCK fall time	Slave	-	-	1600	ns
t_{SIS}	MOSI setup to SCK	Slave	3.0	-	-	ns
t_{SIH}	MOSI hold after SCK	Slave	t_{Clkper}	-	-	ns
t_{SSS}	SS setup to SCK	Slave	21	-	-	ns
t_{SSH}	SS hold after SCK	Slave	20	-	-	ns
t_{SOS}	MISO setup to SCK	Slave	-	8.0	-	ns
t_{SOH}	MISO hold after SCK	Slave	-	13	-	ns
t_{SOSS}	MISO setup after SS low	Slave	-	11	-	ns
t_{SOSH}	MISO hold after SS low	Slave	-	8.0	-	ns

34.14 TWI

Figure 34-7. TWI - Timing Requirements

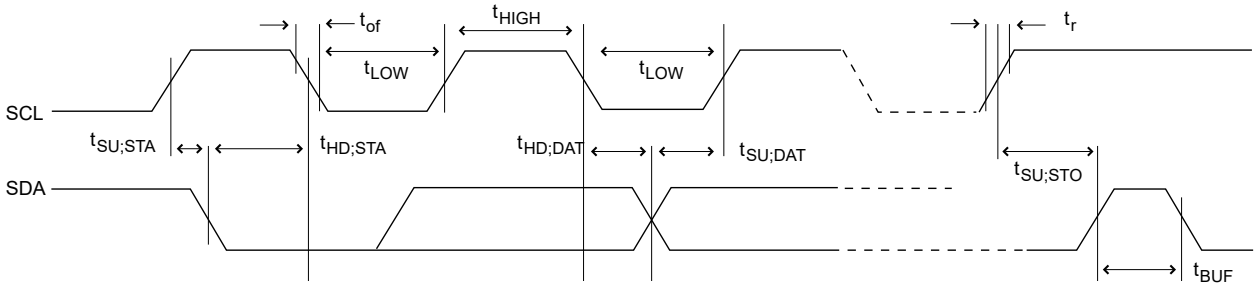

Table 34-21. TWI - Timing Characteristics

Symbol	Description	Condition	Min.	Typ.	Max.	Unit
f_{SCL}	SCL clock frequency		0	-	1000	kHz
V_{IH}	Input high voltage		$0.7 \times V_{DD}$	-	-	V
V_{IL}	Input low voltage		-	-	$0.3 \times V_{DD}$	V
V_{HYS}	Hysteresis of Schmitt trigger inputs		$0.1 \times V_{DD}$		$0.4 \times V_{DD}$	V
V_{OL}	Output low voltage	I_{load}=20mA, Fast mode+	-	-	$0.2V_{DD}$	V
		I_{load}=3mA, Normal mode, V_{DD}>2V	-	-	0.4V	
		I_{load}=3mA, Normal mode, $V_{DD} \leq 2V$	-	-	$0.2 \times V_{DD}$	
I_{OL}	Low level output current	$f_{SCL} \leq 400kHz$, V_{OL}=0.4V	3mA	-	-	mA
		$f_{SCL} \leq 1MHz$, V_{OL}=0.4V	20mA	-	-	

.....continued

Symbol	Description	Condition		Min.	Typ.	Max.	Unit
C_B	Capacitive load for each bus line	f_{SCL}≤100kHz		-	-	400	pF
		f_{SCL}≤400kHz		-	-	400	
		f_{SCL}≤1MHz		-	-	550	
t_R	Rise time for both SDA and SCL	f_{SCL}≤100kHz		-	-	1000	ns
		f_{SCL}≤400kHz		20	-	300	
		f_{SCL}≤1MHz		-	-	120	
t_{OF}	Output fall time from V_{IHmin} to V_{ILmax}	10pF < Capacitance of bus line < 400pF	f_{SCL}≤400kHz	20+0.1×C_B	-	300	ns
			f_{SCL}≤1MHz	20+0.1×C_B	-	120	
t_{SP}	Spikes suppressed by Input filter			0	-	50	ns
I_L	Input current for each I/O pin	0.1×V_{DD}<V_I<0.9×V_{DD}		-	-	1	µA
C_I	Capacitance for each I/O pin			-	-	10	pF
R_P	Value of pull-up resistor	f_{SCL}≤100kHz		(V_{DD}-V_{OL}(max)) /I_{OL}	-	1000ns/ (0.8473×C_B)	Ω
		f_{SCL}≤400kHz		-	-	300ns/ (0.8473×C_B)	
		f_{SCL}≤1MHz		-	-	120ns/ (0.8473×C_B)	
$t_{HD;STA}$	Hold time (repeated) START condition	f_{SCL}≤100kHz		4.0	-	-	µs
		f_{SCL}≤400kHz		0.6	-	-	
		f_{SCL}≤1MHz		0.26	-	-	
t_{LOW}	Low period of SCL Clock	f_{SCL}≤100kHz		4.7	-	-	µs
		f_{SCL}≤400kHz		1.3	-	-	
		f_{SCL}≤1MHz		0.5	-	-	
t_{HIGH}	High period of SCL Clock	f_{SCL}≤100kHz		4.0	-	-	µs
		f_{SCL}≤400kHz		0.6	-	-	
		f_{SCL}≤1MHz		0.26	-	-	
$t_{SU;STA}$	Set-up time for a repeated START condition	f_{SCL}≤100kHz		4.7	-	-	µs
		f_{SCL}≤400kHz		0.6	-	-	
		f_{SCL}≤1MHz		0.26	-	-	
$t_{HD;DAT}$	Data hold time	f_{SCL}≤100kHz		0	-	3.45	µs
		f_{SCL}≤400kHz		0	-	0.9	
		f_{SCL}≤1MHz		0	-	0.45	

.....continued						
Symbol	Description	Condition	Min.	Typ.	Max.	Unit
$t_{SU;DAT}$	Data setup time	f_{SCL}≤100kHz	250	-	-	ns
		f_{SCL}≤400kHz	100	-	-	
		f_{SCL}≤1MHz	50	-	-	
$t_{SU;STO}$	Setup time for STOP condition	f_{SCL}≤100kHz	4	-	-	µs
		f_{SCL}≤400kHz	0.6	-	-	
		f_{SCL}≤1MHz	0.26	-	-	
t_{BUF}	Bus free time between a STOP and START condition	f_{SCL}≤100kHz	4.7	-	-	µs
		f_{SCL}≤400kHz	1.3	-	-	
		f_{SCL}≤1MHz	0.5	-	-	

34.15 Bandgap and VREF

Table 34-22. Internal Voltage Reference Characteristics

Symbol	Description	Min.	Typ.	Max.	Unit
t_{start}	Start-up time	-	25	-	µs
$V_{DDINT055V}$	Power supply voltage range for INT055V	1.8	-	5.5	V
$V_{DDINT11V}$	Power supply voltage range for INT11V	1.8	-	5.5	
$V_{DDINT15V}$	Power supply voltage range for INT15V	2.0	-	5.5	
$V_{DDINT25V}$	Power supply voltage range for INT25V	3.0	-	5.5	
$V_{DDINT43V}$	Power supply voltage range for INT43V	4.8	-	5.5	

Table 34-23. ADC Internal Voltage Reference Characteristics(1)

Symbol(2)	Description	Condition	Min	Typ	Max	Unit
INT11V	Internal reference voltage	V_{DD}=[1.8V,3.6V] T=[0-105]°C	-2.0		2.0	%
INT055V INT15V INT25V	Internal reference voltage	V_{DD}=[1.8V,3.6V] T=[0-105]°C	-3.0		3.0	
INT055V INT11V INT15V INT25V INT43V	Internal reference voltage	V_{DD}=[1.8V,5.5V] T=[-40-125]°C	-5.0		5.0	

Note:

1. These values are based on characterization and not covered by production testlimits.
2. The symbols INTxxV refer to the respective values of the ADC0REFSEL and DAC0REFSEL bit fields in the VREF.CTRLA register.

Table 34-24. DAC and AC Internal Voltage Reference Characteristics(1)

Symbol(2)	Description	Condition	Min	Typ	Max	Unit
INT055V INT11V INT15V INT25V	Internal reference voltage	V_{DD}=[1.8V,3.6V] T=[0-105]°C	-3.0		3.0	%
INT055V INT11V INT15V INT25V INT43V	Internal reference voltage	V_{DD}=[1.8V,5.5V] T=[-40-125]°C	-5.0		5.0	

Note:

1. These values are based on characterization and not covered by production test limits.
2. The symbols INTxxV refer to the respective values of the ADC0REFSEL and DAC0REFSEL bit fields in the VREF.CTRLA register.

34.16 ADC

Operating conditions:

- V_{DD} = 1.8 to 5.5V
- Temperature = -40°C to 125°C
- DUTYCYC = 25%
- CLK_{ADC} = 13 * f_{ADC}
- SAMPCAP is 10 pF for 0.55V reference, while it is set to 5 pF for V_{REF}≥1.1V
- Applies for all allowed combinations of V_{REF} selections and Sample Rates unless othervise noted

Table 34-25. Power Supply, Reference, and Input Range

Symbol	Description	Conditions	Min.	Typ.	Max.	Unit
V_{DD}	Supply voltage		1.8	-	5.5	V
V_{REF}	Reference voltage	REFSEL = Internal reference	0.55	-	V_{DD}-0.4	V
		REFSEL = V_{DD}	1.8	-	5.5	
C_{IN}	Input capacitance	SAMPCAP=5 pF	-	5	-	pF
		SAMPCAP=10 pF	-	10	-	
V_{IN}	Input voltage range		0	-	V_{REF}	V
I_{BAND}	Input bandwidth	1.1V≤V_{REF}	-	-	57.5	kHz

Table 34-26. Clock and Timing Characteristics

Symbol	Description	Conditions	Min.	Typ.	Max.	Unit
f_{ADC}	Sample rate	1.1V≤V_{REF}	15	-	115	ksps
		1.1V≤V_{REF} (8-bit resolution)	15	-	150	
		V_{REF}=0.55V (10 bits)	7.5	-	20	
CLK_{ADC}	Clock frequency	V_{REF}=0.55V (10 bits)	100	-	260	kHz
		1.1V≤V_{REF} (10 bits)	200	-	1500	
		1.1V≤V_{REF} (8-bit resolution)	200	-	2000(1)	

.....continued

Symbol	Description	Conditions	Min.	Typ.	Max.	Unit
Ts	Sampling time		2	2	33	CLK_{ADC} cycles
T_{CONV}	Conversion time (latency)	Sampling time = 2 CLK_{ADC}	8.7	-	50	µs
T_{START}	Start-up time	Internal V_{REF}	-	22	-	µs

Note:

1. 50% duty cycle is required for clock frequencies above 1500 kHz.

Table 34-27. Accuracy Characteristics(2)

Symbol	Description	Conditions		Min.	Typ.	Max.	Unit
Res	Resolution			-	10	-	bit
INL	Integral Non-linearity	REFSEL = INTERNAL V_{REF}=0.55V	f_{ADC}=7.7 ksps	-	1.0	-	
		REFSEL = INTERNAL or VDD	f_{ADC}=15 ksps	-	1.0	-	LSB
		REFSEL = INTERNAL or VDD 1.1V≤V_{REF}	f_{ADC}=77 ksps	-	1.0	-	
			f_{ADC}=115 ksps	-	1.2	-	
DNL(1)	Differential Non-linearity	REFSEL = INTERNAL V_{REF}=0.55V	f_{ADC}=7.7 ksps	-	0.6	-	LSB
		REFSEL = INTERNAL or VDD	f_{ADC}=15 ksps	-	0.4	-	
		REFSEL = INTERNAL or VDD 1.1V≤V_{REF}	f_{ADC}=77 ksps	-	0.4	-	
		REFSEL = INTERNAL 1.1V≤V_{REF}	f_{ADC}=115 ksps	-	0.6	-	
		REFSEL = VDD 1.1V≤V_{REF}	f_{ADC}=115 ksps	-	0.6	-	
EABS	Absolute accuracy	REFSEL = INTERNAL V_{REF} = 1.1V	T=[0-105]°C V_{DD} = [1.8V- 3.6V]	-	3	-	LSB
			V_{DD} = [1.8V - 3.6V]	-	3	-	
		REFSEL = V_{DD}		-	2	-	
		REFSEL = INTERNAL		-	3	-	

.....continued							
Symbol	**Description**	**Conditions**		**Min.**	**Typ.**	**Max.**	**Unit**
EGAIN	Gain error	REFSEL = INTERNAL V_{REF} = 1.1V	T=[0 - 105]°C V_{DD} = [1.8V - 3.6V]	-	5	-	LSB
			V_{DD} = [1.8V - 3.6V]	-	5	-	
		REFSEL = V_{DD}		-	2	-	
		REFSEL =INTERNAL		-	5	-	
EOFF	Offset error			-	-0.5	-	LSB

Note:

1. A DNL error of less than or equal to 1 LSB ensures a monotonic transfer function with no missing codes.
2. These values are based on characterization and not covered by production test limits.
3. Reference setting and f_{ADC} must fulfill the specification in "Clock and Timing Characteristics" and "Power supply, Reference, and Input Range" tables.

Related Links

30.2.4 Definitions

34.17 DAC

V_{DD}=3V, unless stated otherwise.

Table 34-28. Power Supply, Reference and Input Range

Symbol	Description	Min.	Typ.	Max.	Unit
V_{DD}	Supply Voltage(1)	1.8	3	5.5	V
R_{Load}	Resistive External Load	5	-	-	kΩ
C_{Load}	Capacitive External Load	-	-	30	pF
V_{OUT}	Output Voltage Range	0.2	-	V_{DD}-0.2V	V
I_{OUT}	Output sink/source	-	1	-	mA

Note: 1. Supply voltage must meet the V_{DD} specification for the V_{REF} level used as DAC reference.

Table 34-29. Clock and Timing Characteristics

Symbol	Description	Conditions	Min.	Typ.	Max.	Unit
f_{DAC}	Maximum Conversion Rate	0.55V≤ V_{REF}≤2.5V	-	350	-	ksps
		V_{REF}=4.3 V	-	270	-	ksps

Table 34-30. Accuracy Characteristics

Symbol	Description	Conditions	Min.	Typ.	Max.	Unit
Res	Resolution		-		8	bits
INL	Integral Non-Linearity	0.55V≤V_{REF}≤4.3	-	0.3	-	LSB
DNL	Differential Non-Linearity	0.55V≤V_{REF}≤4.3	-	0.25	-	LSB
EOFF	Offset Error	V_{REF} =1.1V V_{CC} = 3.0 T=25C	-	±0.25	-	LSB
EGAIN	Gain Error	V_{REF}=1.1V V_{CC} = 3.0 T=25C	-	±1	-	LSB

34.18 AC

Table 34-31. Analog Comparator Characteristics, Low-Power Mode Disabled

Symbol	Description	Condition	Min.	Typ.	Max.	Unit
V_{IN}	Input voltage		-0.2	-	V_{DD}	V
C_{IN}	Input pin capacitance	PA6	-	9	-	pF
		PA7, PB5, PB4	-	5	-	
V_{OFF}	Input offset voltage	$V_{IN}=V_{DD}/2$	-20	<5	20	mV
		V_{IN}=[-0.2V, V_{DD}]	-	<20	-	
I_L	Input leakage current		-	5	-	nA
T_{START}	Start-up time		-	1.3	-	µs
V_{HYS}	Hysteresis	HYSMODE=0x0	-	0	-	mV
		HYSMODE=0x1	-	10	-	
		HYSMODE=0x2	-	30	-	
		HYSMODE=0x3	-	55	-	
t_{PD}	Propagation delay	25 mV Overdrive, V_{DD}≥2.7V, Low-Power mode disabled	-	50	-	ns

Table 34-32. Analog Comparator Characteristics, Low-Power Mode Enabled

Symbol	Description	Condition	Min.	Typ.	Max.	Unit
V_{IN}	Input voltage		0	-	V_{DD}	V
C_{IN}	Input pin capacitance	PA6	-	9	-	pF
		PA7, PB5, PB4	-	5	-	
V_{OFF}	Input offset voltage	V_{IN} = $V_{DD}/2$	-25	<10	25	mV
		V_{IN}=[0V, V_{DD}]	-	<30	-	
I_L	Input leakage current		-	5	-	nA
T_{START}	Start-up time		-	1.3	-	µs
V_{HYS}	Hysteresis	HYSMODE=0x0	-	0	-	mV
		HYSMODE=0x1	-	10	-	
		HYSMODE=0x2	-	30	-	
		HYSMODE=0x3	-	55	-	
t_{PD}	Propagation delay	25 mV Overdrive, V_{DD}≥2.7V	-	150	-	ns

34.19 PTC

Table 34-33. Peripheral Touch Controller Characteristics - Operating Ratings

Symbol	Description	Condition	Min.	Typ.	Max.	Unit
C_{LOAD}	Maximum load		-	48	-	pF
C_{INT}			-	30	-	pF

.....continued						
Symbol	**Description**	**Condition**	**Min.**	**Typ.**	**Max.**	**Unit**
	Driven shield capacitive drive		-	300	-	pF
CLK_{ADC}	Supported ADC clock frequency	25% duty cycle	200	-	1500	kHz
		50% duty cycle	200	-	2000	

Table 34-34. Peripheral Touch Controller Characteristics - Pad Capacitance

Symbol	Description	Condition	Min.	Typ.	Max.	Unit
C_Y	Pad capacitance Yline	PA4, Y0	-	4	-	pF
		PA5, Y1	-	4	-	
		PA6, Y2	-	10	-	
		PA7,Y3	-	5	-	
		PB1, Y4	-	13	-	
		PB0,Y5	-	13	-	

34.20 UPDI Timing

UPDI Enable Sequence with UPDI PAD Enabled by Fuse

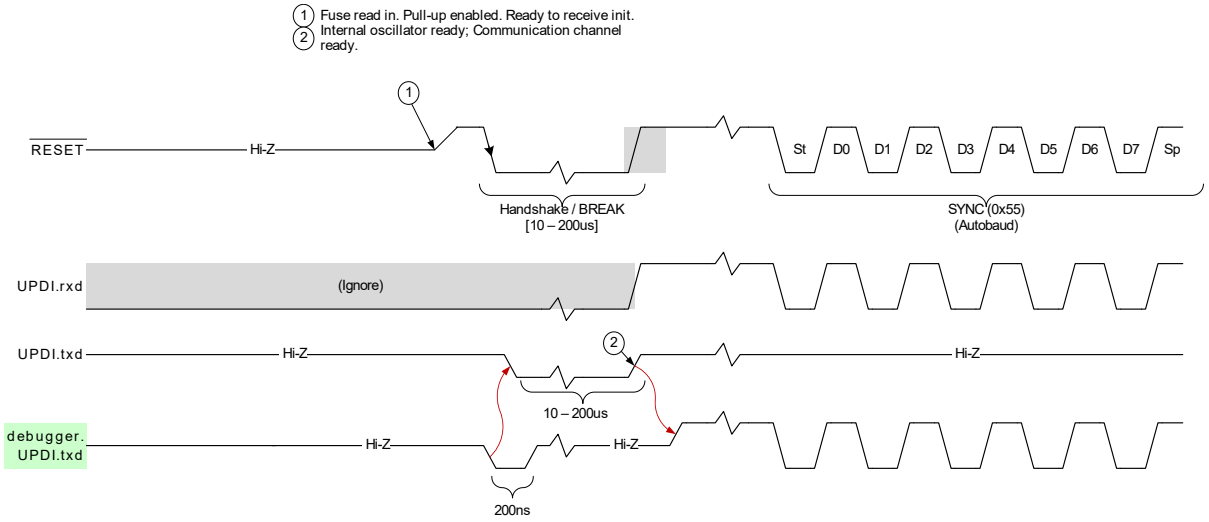

Symbol	Description	Min.	Max.	Unit
T_{RES}	Duration of Handshake/Break on RESET	10	200	µs
T_{UPDI}	Duration of UPDI.txd=0	10	200	µs
T_{Deb0}	Duration of Debugger.txd=0	0.2	1	µs
T_{DebZ}	Duration of Debugger.txd=z	200	14000	µs

Related Links

33.3.2.1 UPDI Enable with Fuse Override of RESET pin

34.21 Programming Time

See the following table for typical programming times for Flash and EEPROM.

Table 34-35. Programming Times

Symbol	Typ. Programming Time
Page Buffer Clear	7 CLK_CPU cycles
Page Write	2ms
Page Erase	2ms
Page Erase-Write	4ms
Chip Erase	4ms
EEPROM Erase	4ms

35. Typical Characteristics

35.1 Power Consumption

35.1.1 Supply Currents in Active Mode for ATtiny416

Figure 35-1. ATtiny416: Active Supply Current vs. Frequency (1-20MHz) at T=25°C

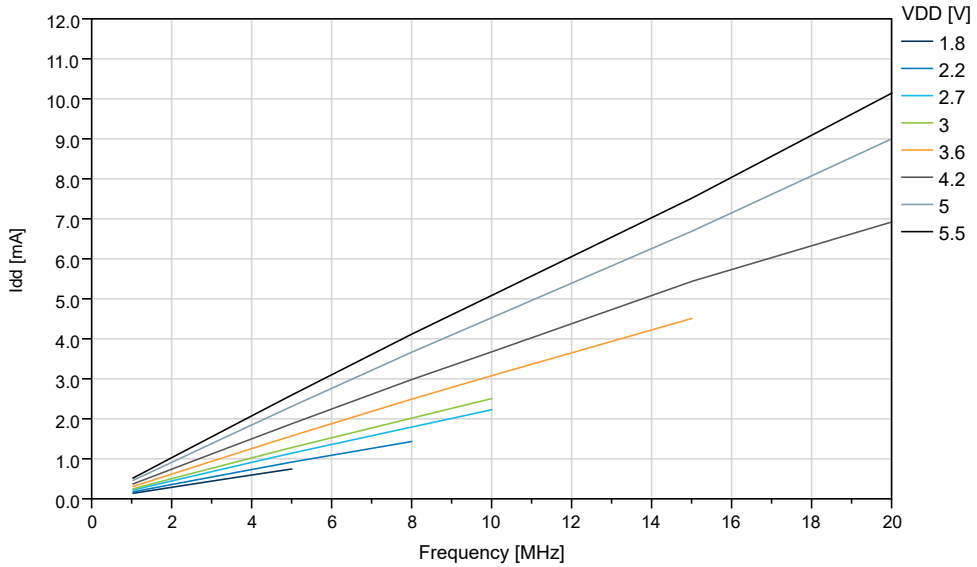

Figure 35-2. ATtiny416: Active Supply Current vs. Frequency [0.1, 1.0]MHz at T=25°C

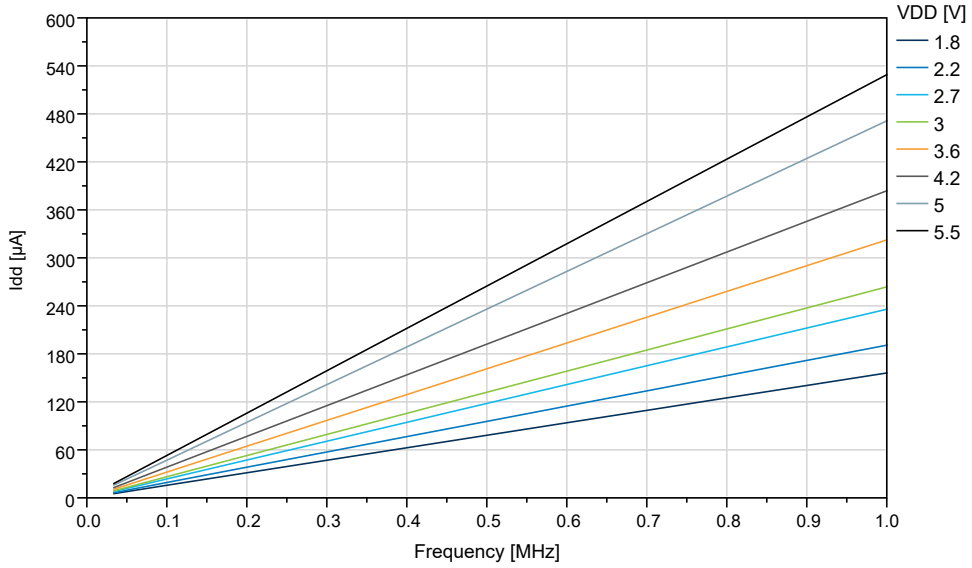

Figure 35-3. ATtiny416: Active Supply Current vs. Temperature (f=20MHz OSC20M)

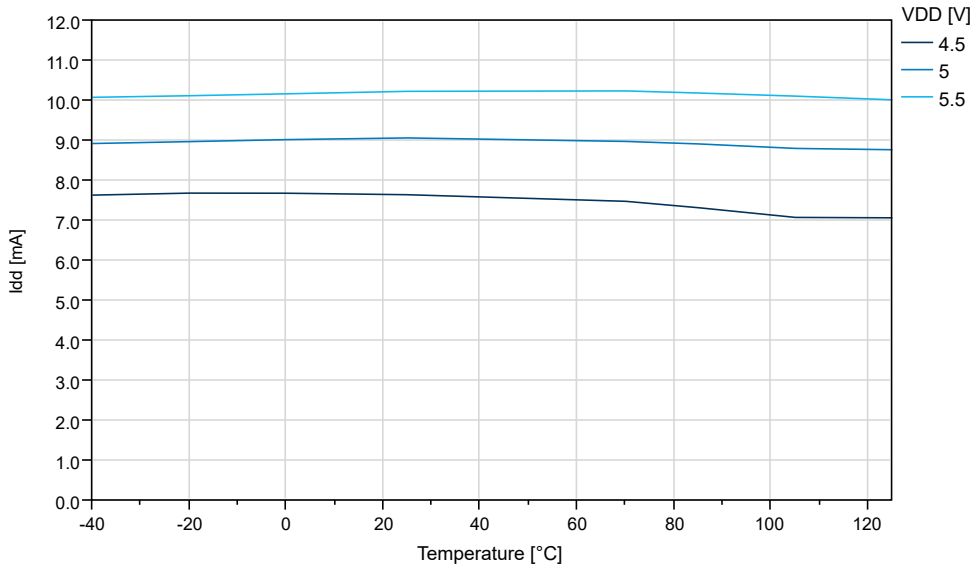

Figure 35-4. ATtiny416: Active Supply Current vs. V_{DD} (f=[1.25, 20]MHz OSC20M) at T=25°C

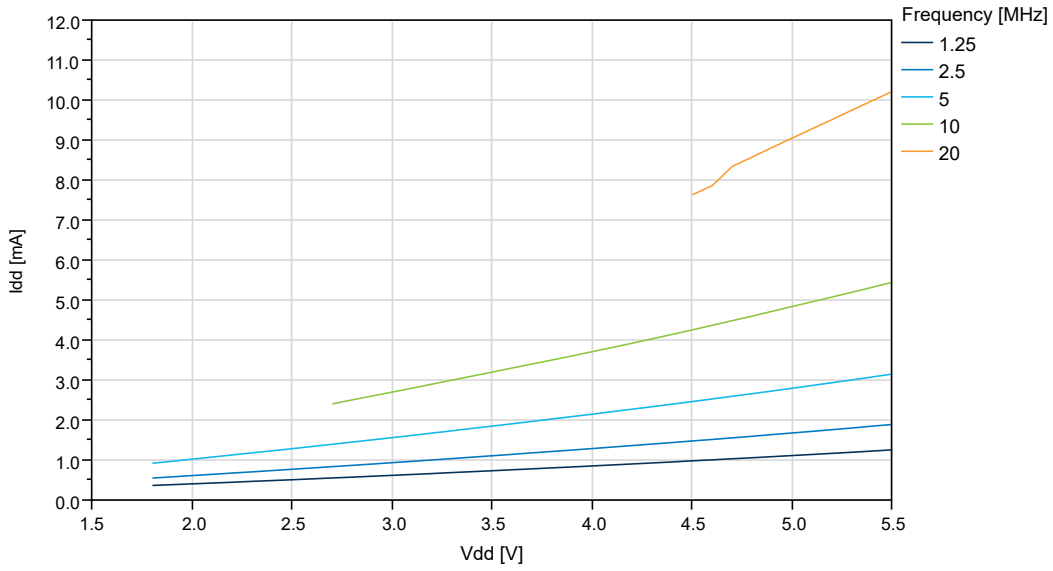

Figure 35-5. ATtiny416: Active Supply Current vs. V_{DD} (f=32KHz OSCULP32K)

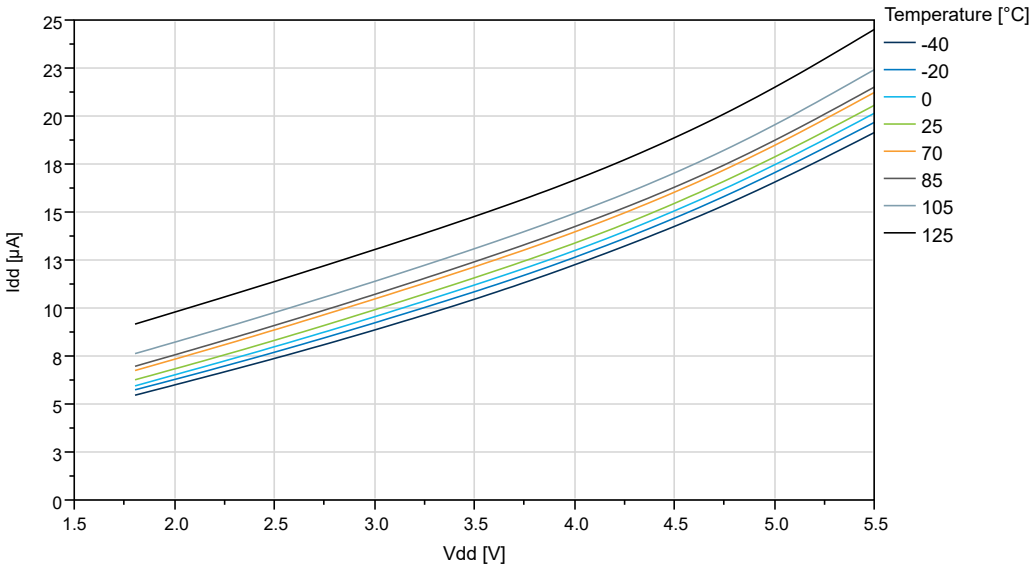

35.1.2 Supply Currents in Idle Mode for ATtiny416

Figure 35-6. ATtiny416: Idle Supply Current vs. Frequency (1-20MHz) at T=25°C

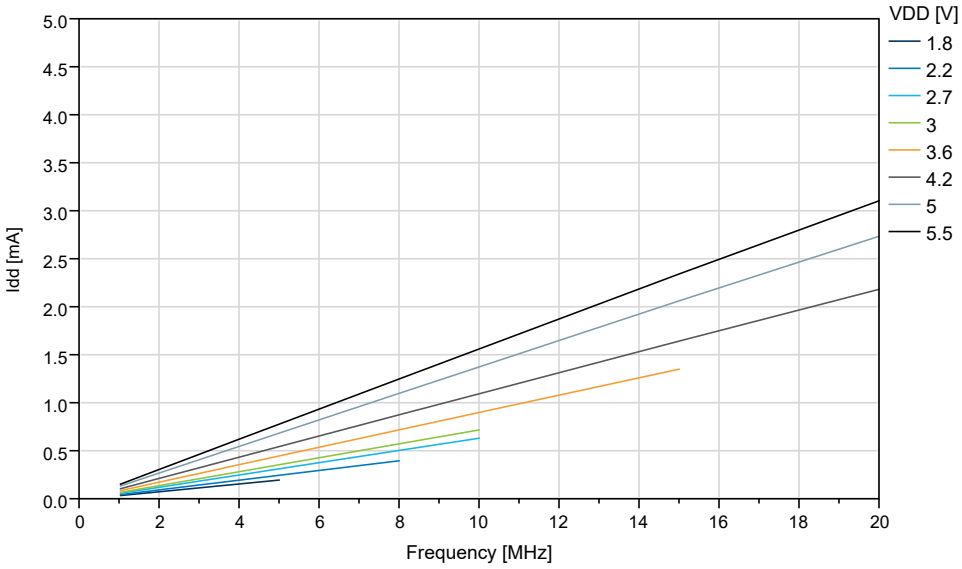

Figure 35-7. ATtiny416: Idle Supply Current vs. Low Frequency (0.1-1.0MHz) at T=25°C

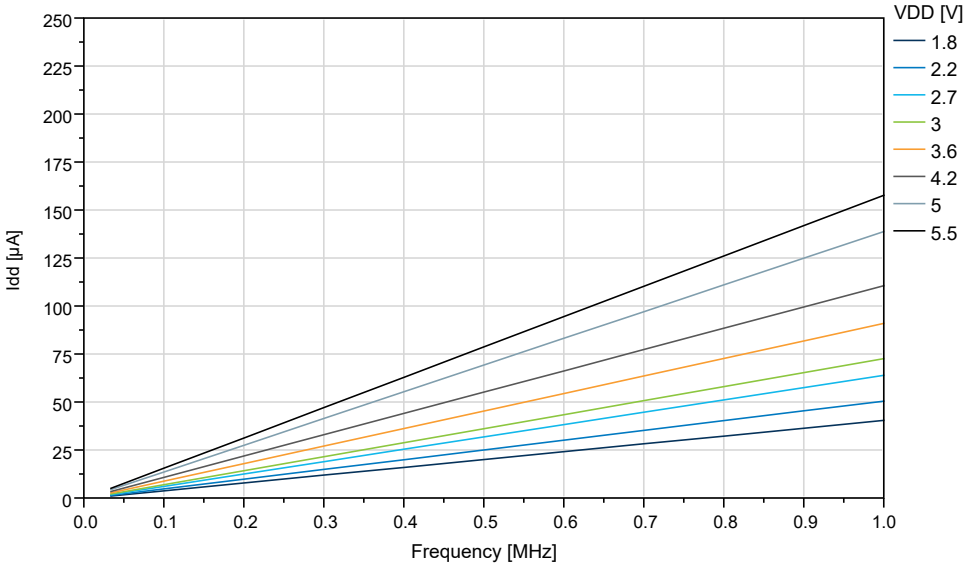

Figure 35-8. ATtiny416: Idle Supply Current vs. Temperature (f=20MHz OSC20M)

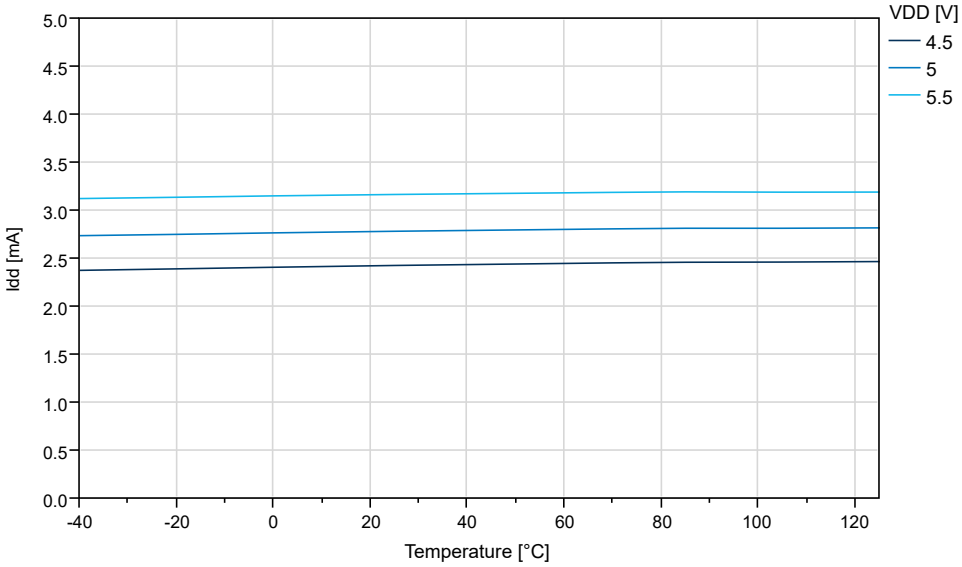

Figure 35-9. ATtiny416: Idle Supply Current vs. V_{DD} (f=32KHz OSCULP32K)

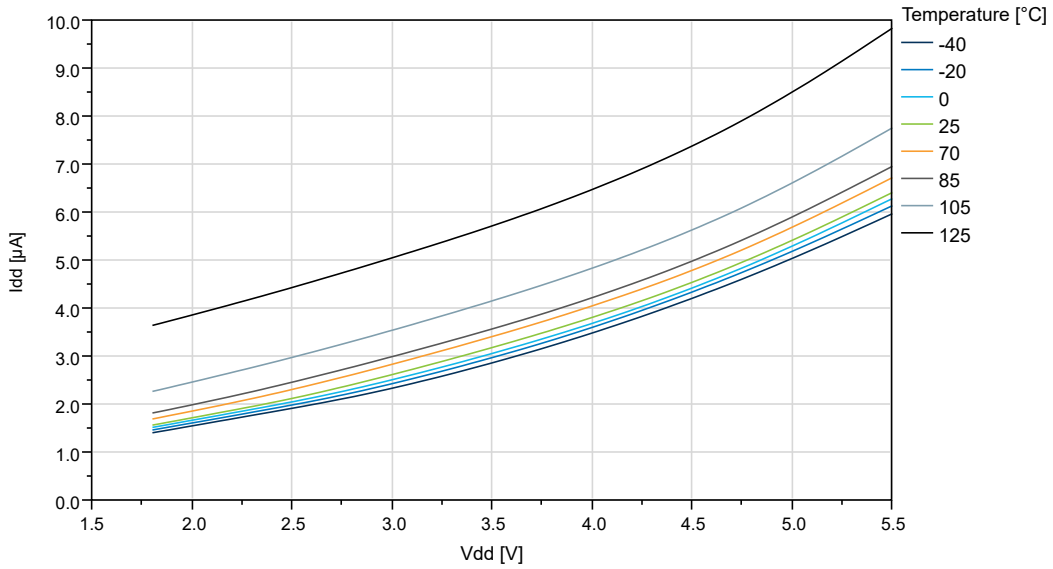

35.1.3 Supply Currents in Power Down Mode for ATtiny416

Figure 35-10. ATtiny416: Power Down Mode Supply Current vs. Temperature (all functions disabled)

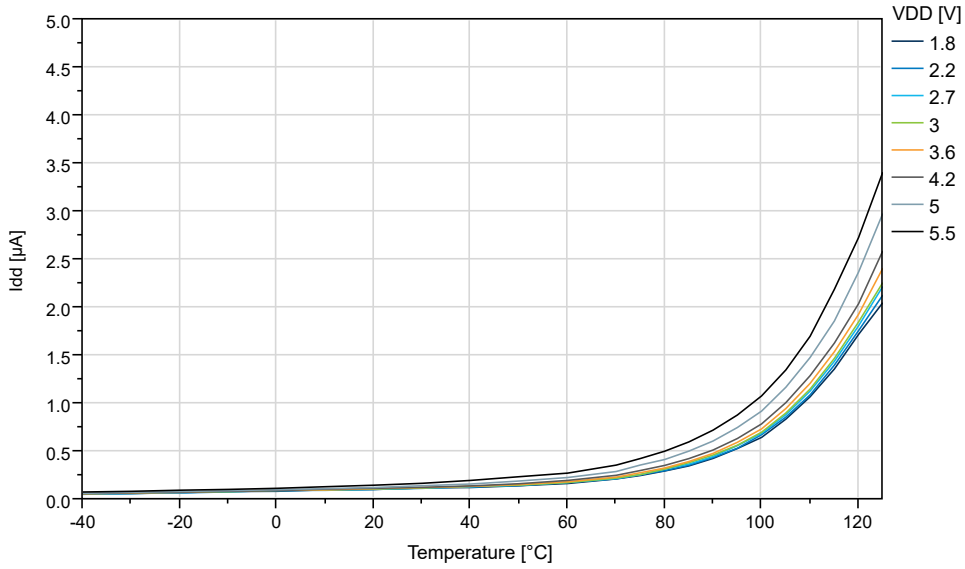

Figure 35-11. ATtiny416: Power Down Mode Supply Current vs. V_{DD} (all functions disabled)

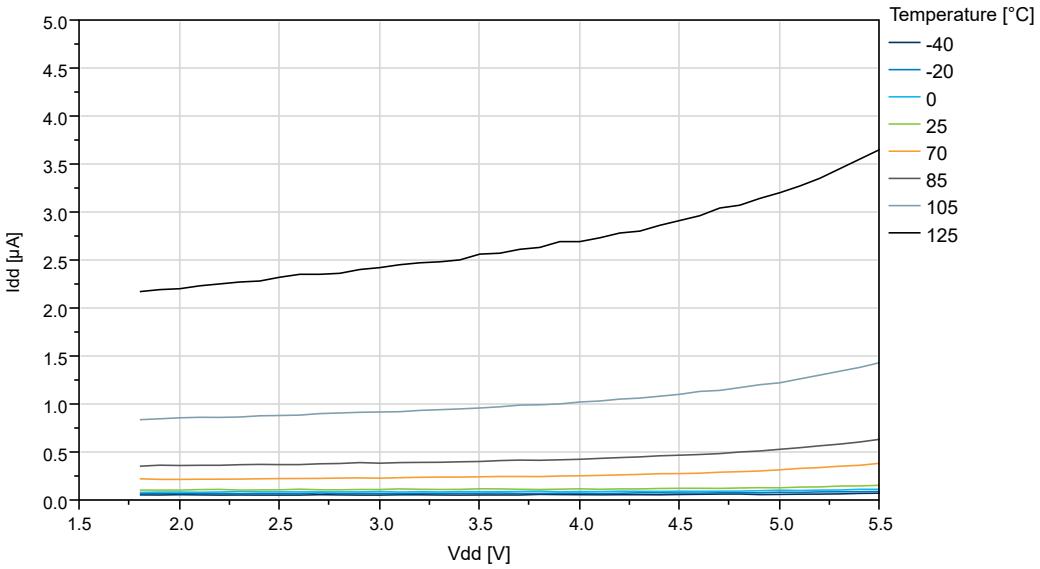

35.1.4 Supply Currents in Standby Mode for ATtiny416

Figure 35-12. ATtiny416: Standby Mode Supply Current vs. V_{DD} (RTC running with external 32KHz osc.)

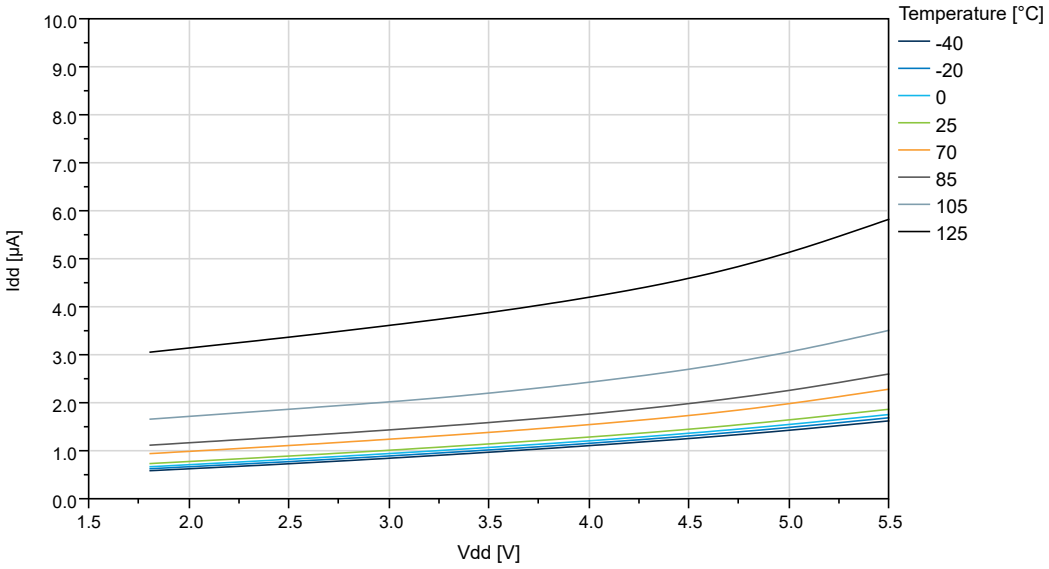

Figure 35-13. ATtiny416: Standby Mode Supply Current vs. V_{DD} (RTC running with internal OSCULP32K)

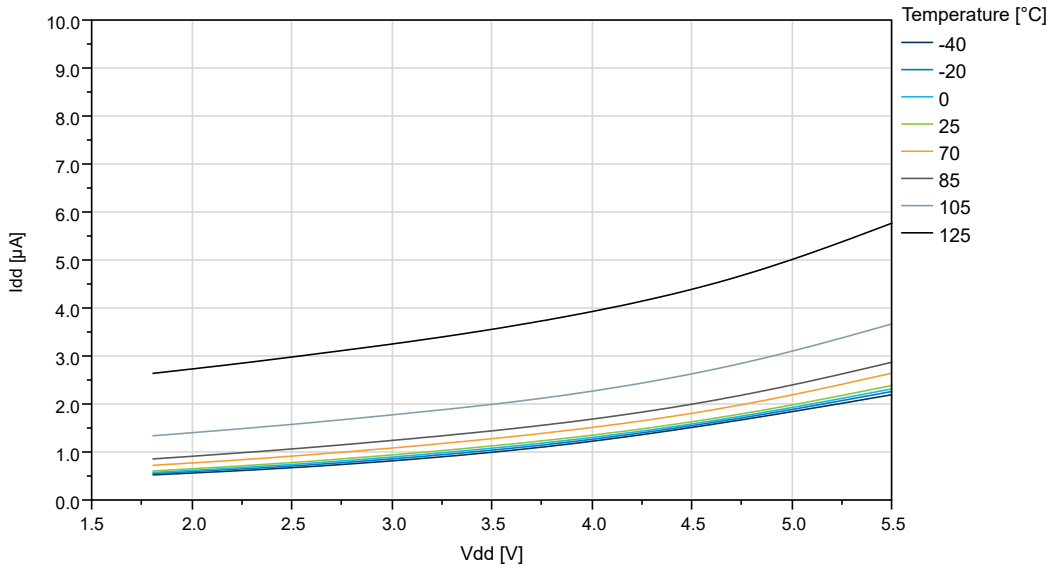

Figure 35-14. ATtiny416: Standby Mode Supply Current vs. V_{DD} (Sampled BOD running at 125Hz)

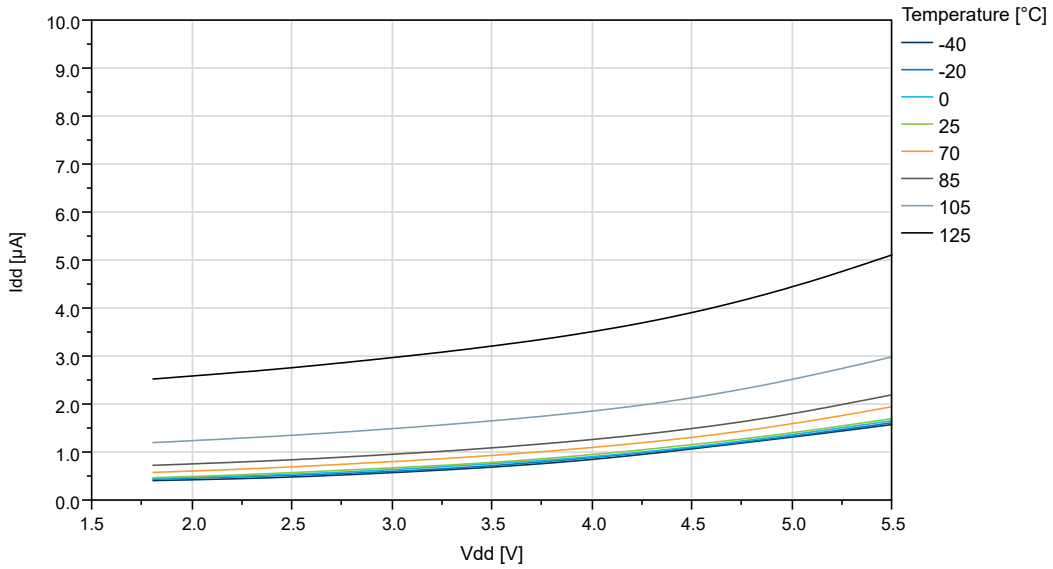

Figure 35-15. ATtiny416: Standby Mode Supply Current vs. V_{DD} (Sampled BOD running at 1kHz)

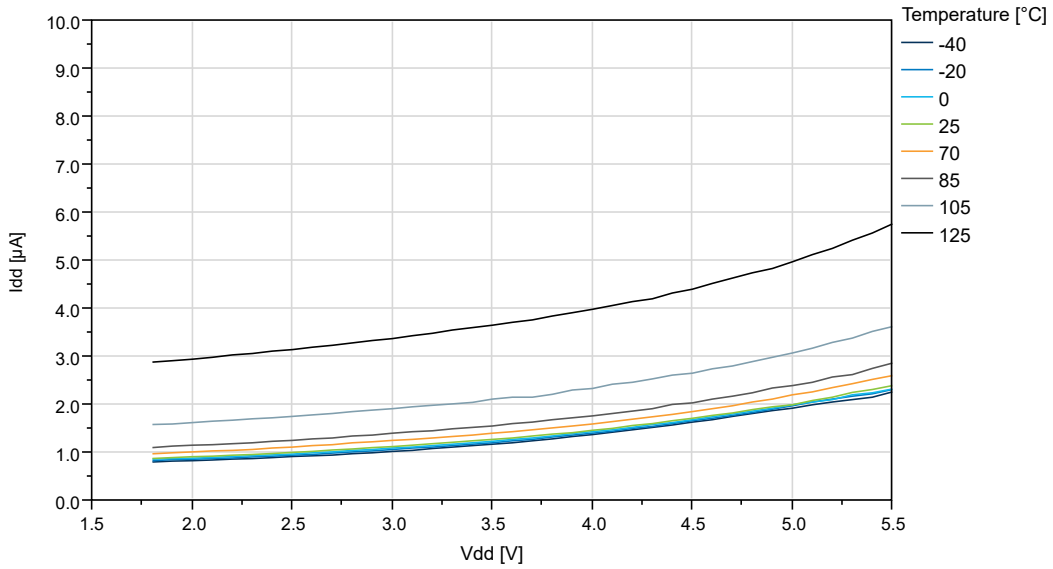

35.1.5 Supply Currents in Active Mode for ATtiny816

Figure 35-16. ATtiny816: Active Supply Current vs. Frequency (1-20MHz) at T=25°C

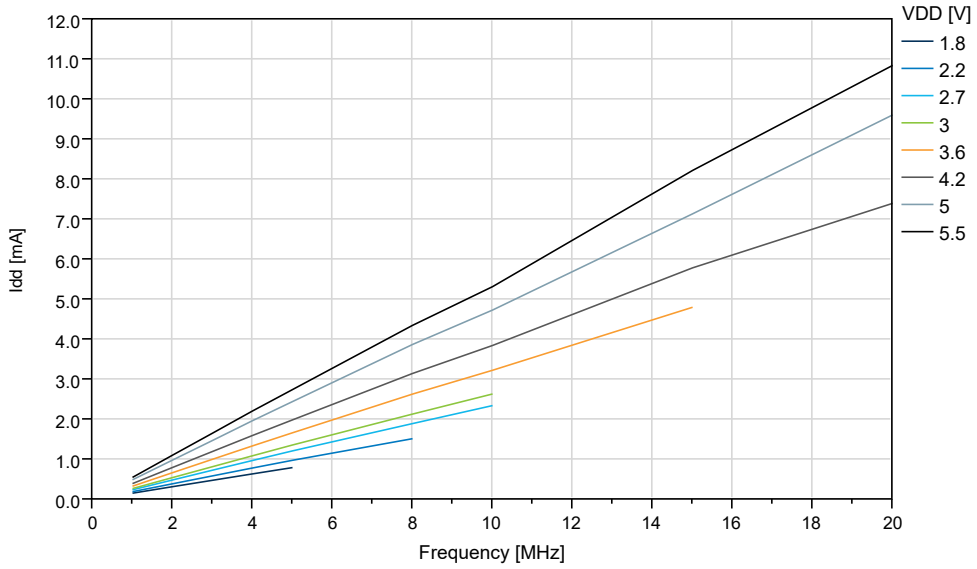

Figure 35-17. ATtiny816: Active Supply Current vs. Frequency [0.1, 1.0]MHz at T=25°C

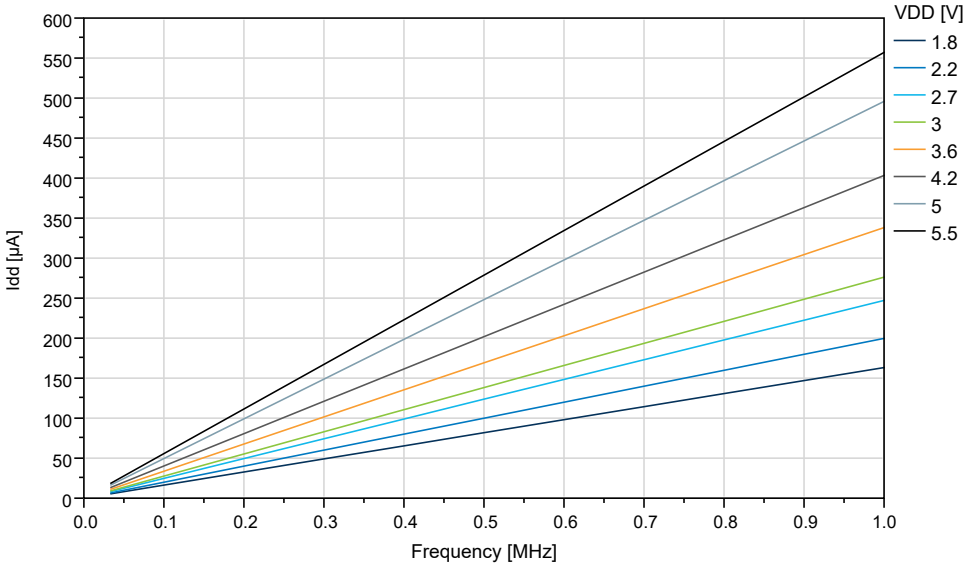

Figure 35-18. ATtiny816: Active Supply Current vs. Temperature (f=20MHz OSC20M)

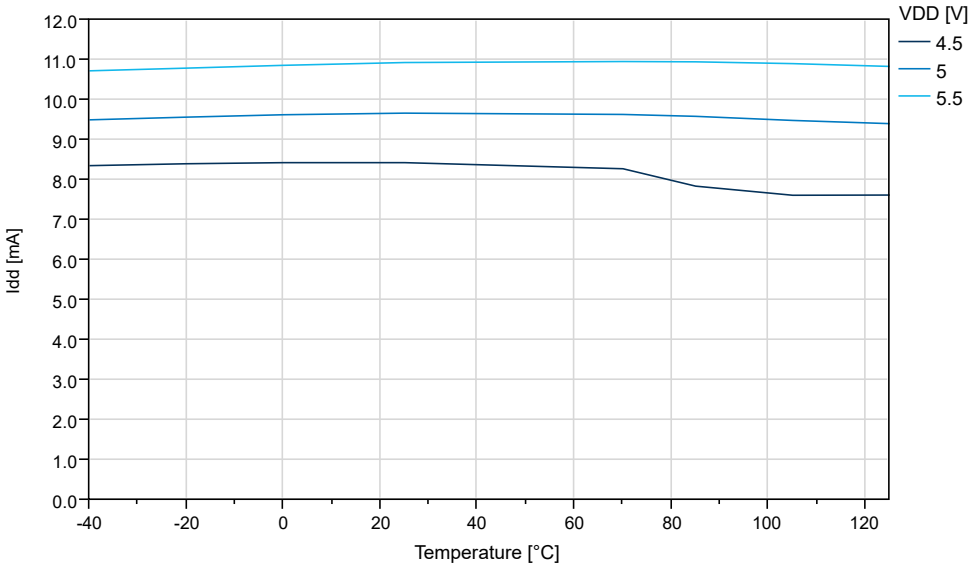

Figure 35-19. ATtiny816: Active Supply Current vs. V_{DD} (f=[1.25, 20]MHz OSC20M) at T=25°C

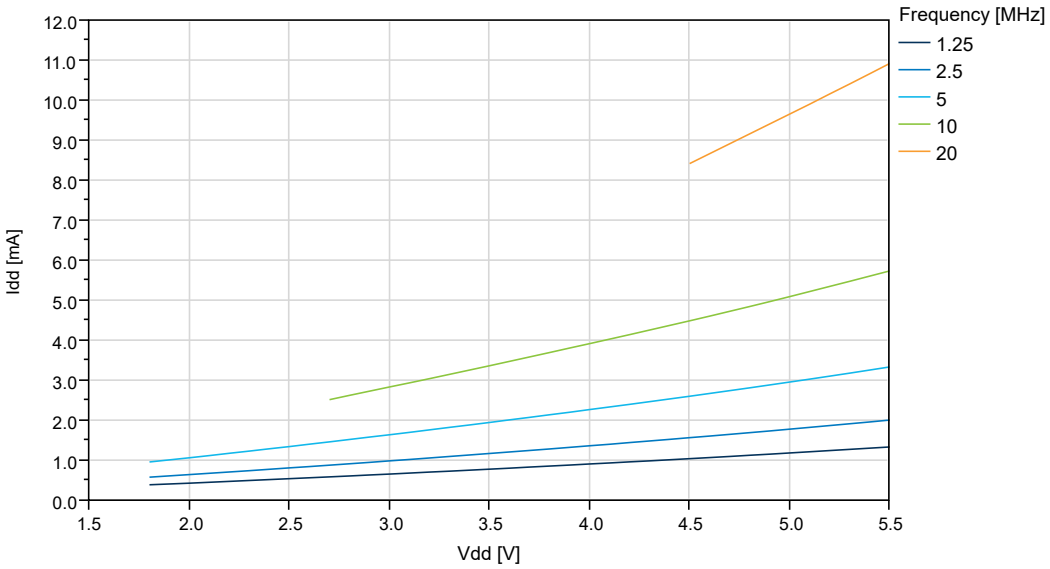

Figure 35-20. ATtiny816: : Active Supply Current vs. V_{DD} (f=32KHz OSCULP32K)

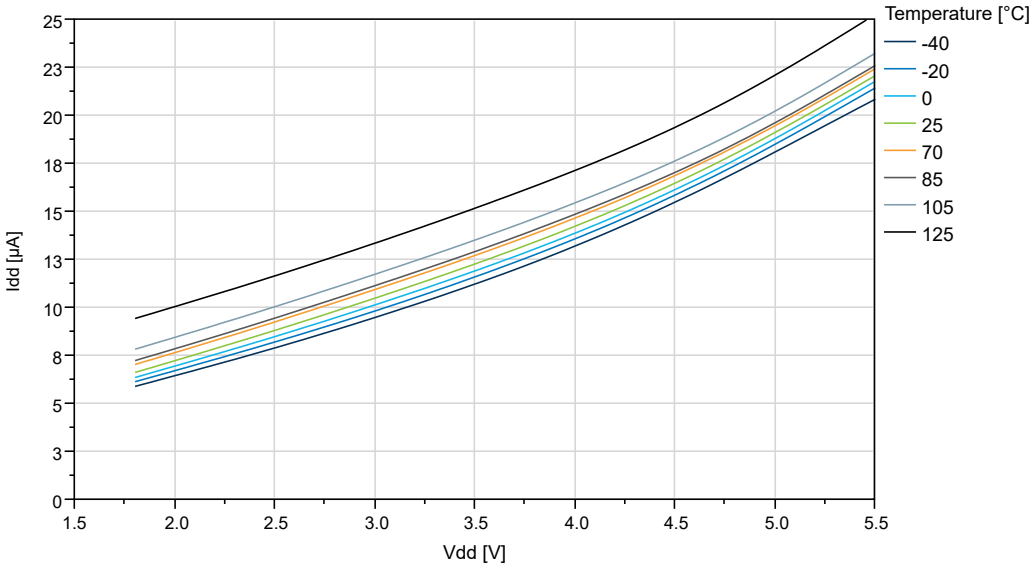

35.1.6 Supply Currents in Idle Mode for ATtiny816

Figure 35-21. ATtiny816: Idle Supply Current vs. Frequency (1-20MHz) at T=25°C

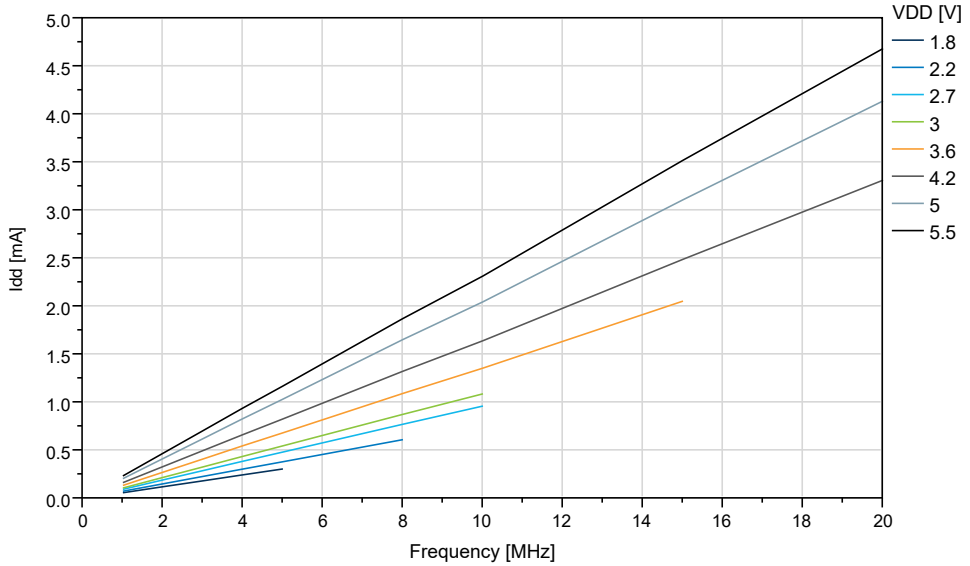

Figure 35-22. ATtiny816: Idle Supply Current vs. Low Frequency (0.1-1.0MHz) at T=25°C

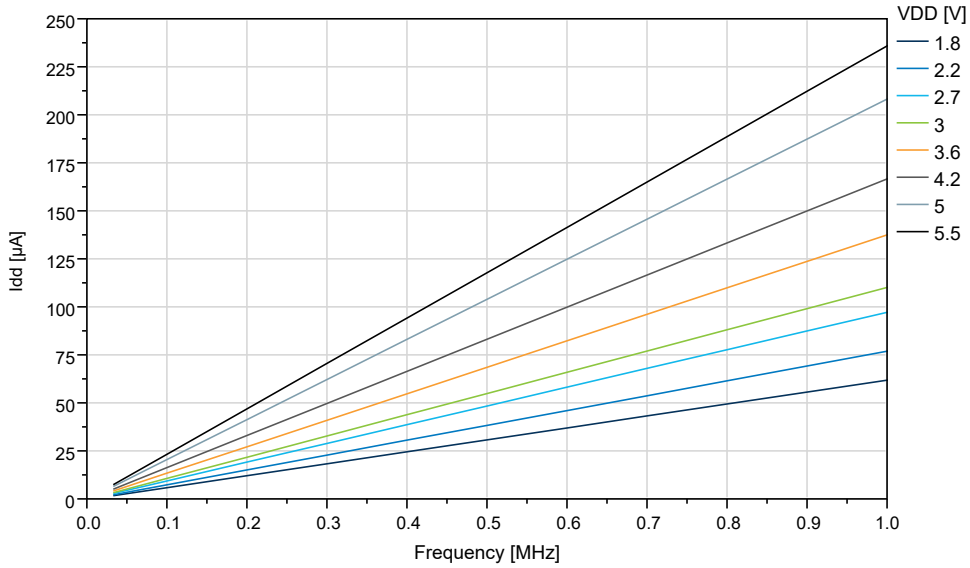

Figure 35-23. ATtiny816: Idle Supply Current vs. Temperature (f=20MHz OSC20M)

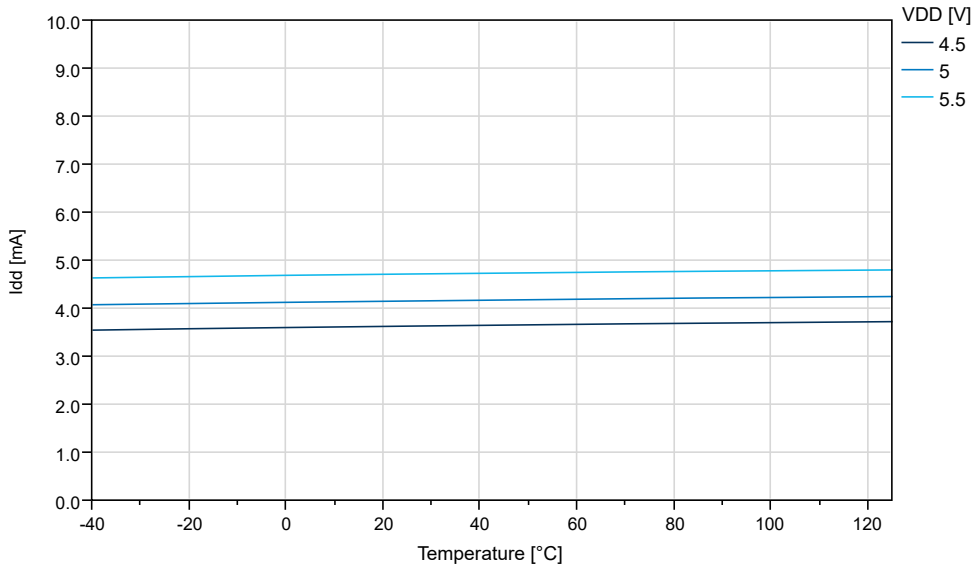

Figure 35-24. ATtiny816: Idle Supply Current vs. V_{DD} (f=32KHz OSCULP32K)

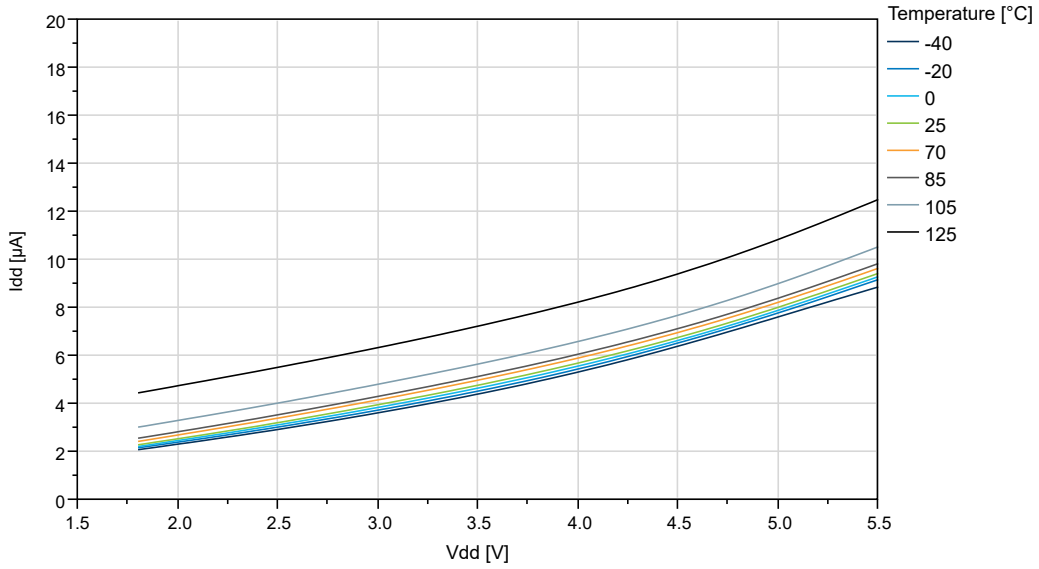

35.1.7 Supply Currents in Power Down Mode for ATtiny816

Figure 35-25. ATtiny816: Power Down Mode Supply Current vs. Temperature (all functions disabled)

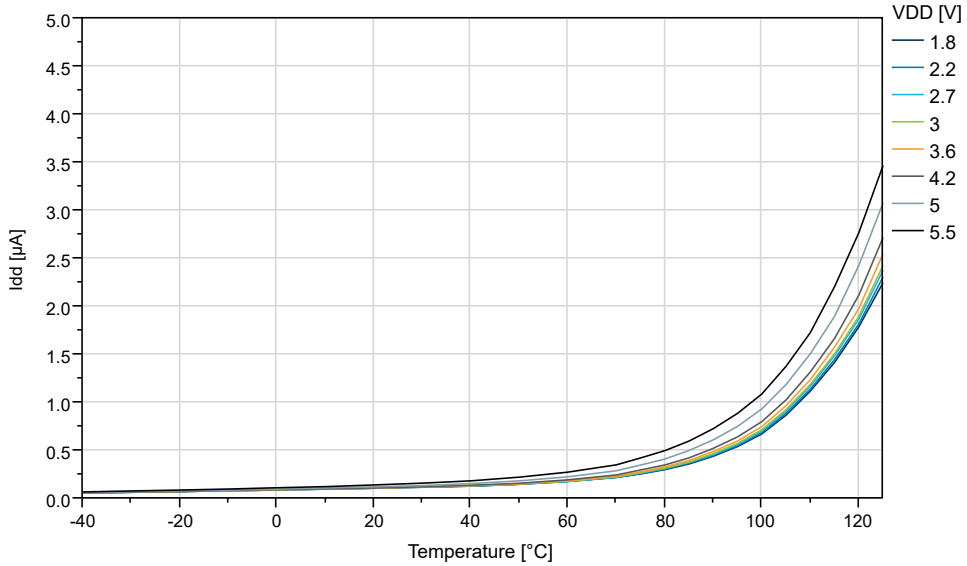

Figure 35-26. ATtiny816: Power Down Mode Supply Current vs. V_{DD} (all functions disabled)

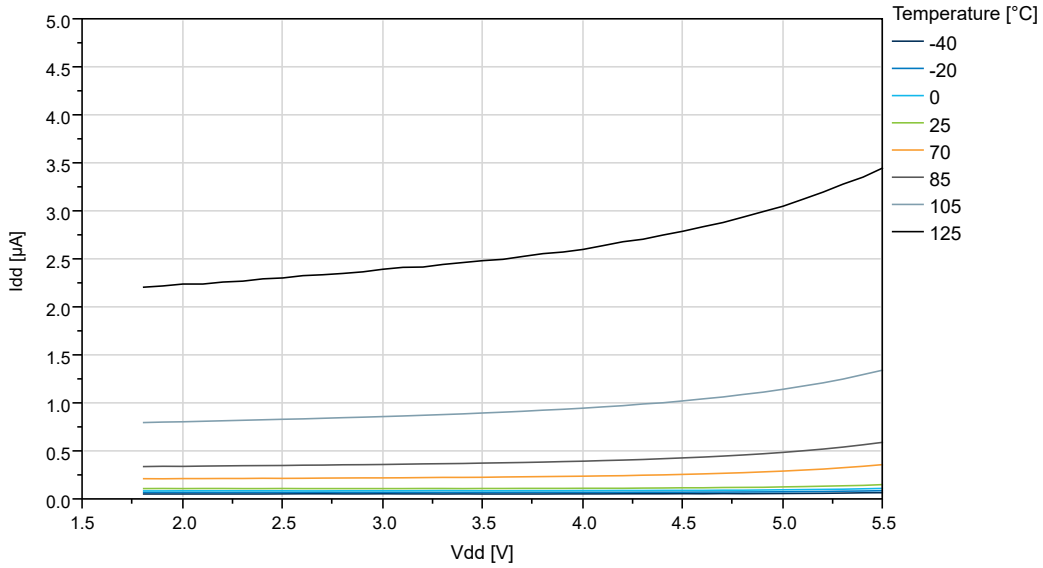

35.1.8 Supply Currents in Standby Mode for ATtiny816

Figure 35-27. ATtiny816: Standby Mode Supply Current vs. V_{DD} (RTC running with external 32KHz osc.)

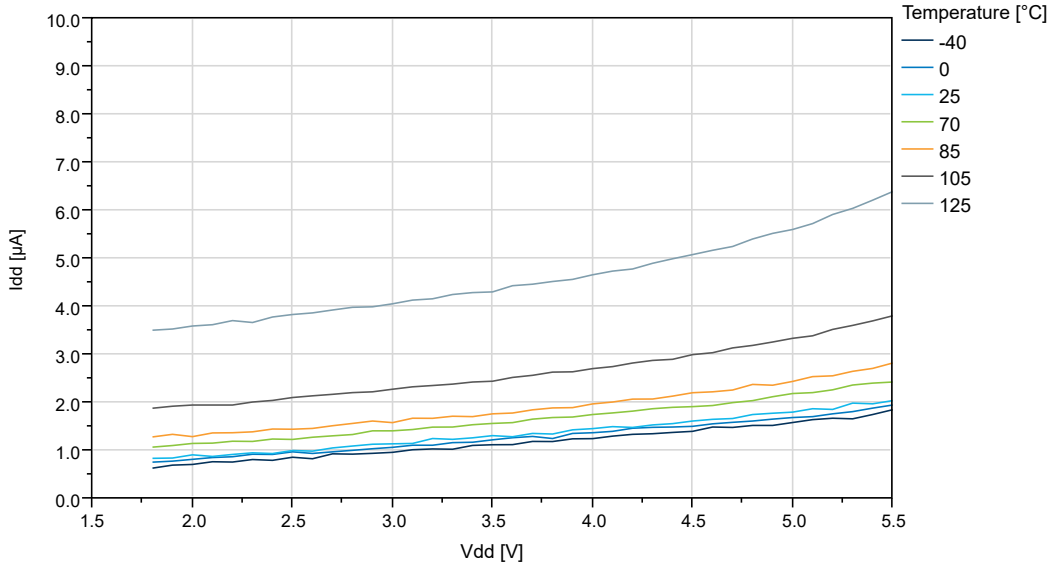

Figure 35-28. ATtiny816: Standby Mode Supply Current vs. V_{DD} (RTC running with internal OSCULP32K)

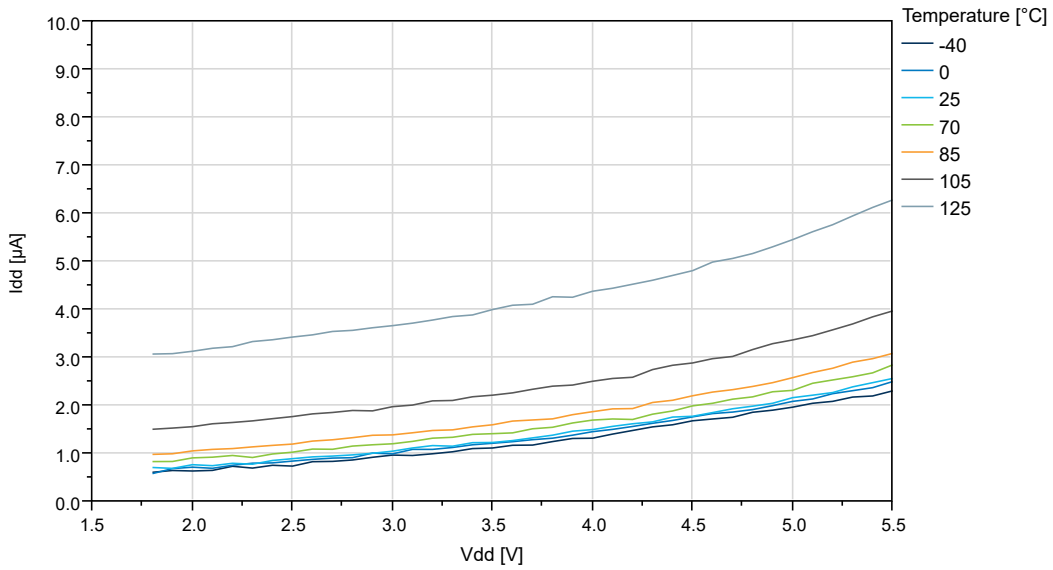

Figure 35-29. ATtiny816: : Standby Mode Supply Current vs. V_{DD} (Sampled BOD running at 125Hz)

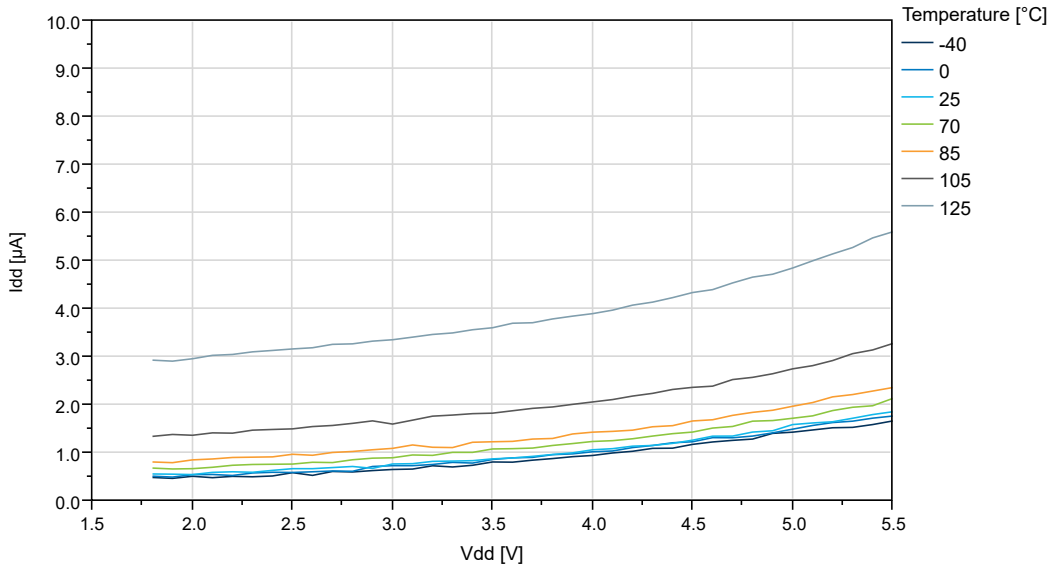

Figure 35-30. ATtiny816: Standby Mode Supply Current vs. V_{DD} (Sampled BOD running at 1kHz)

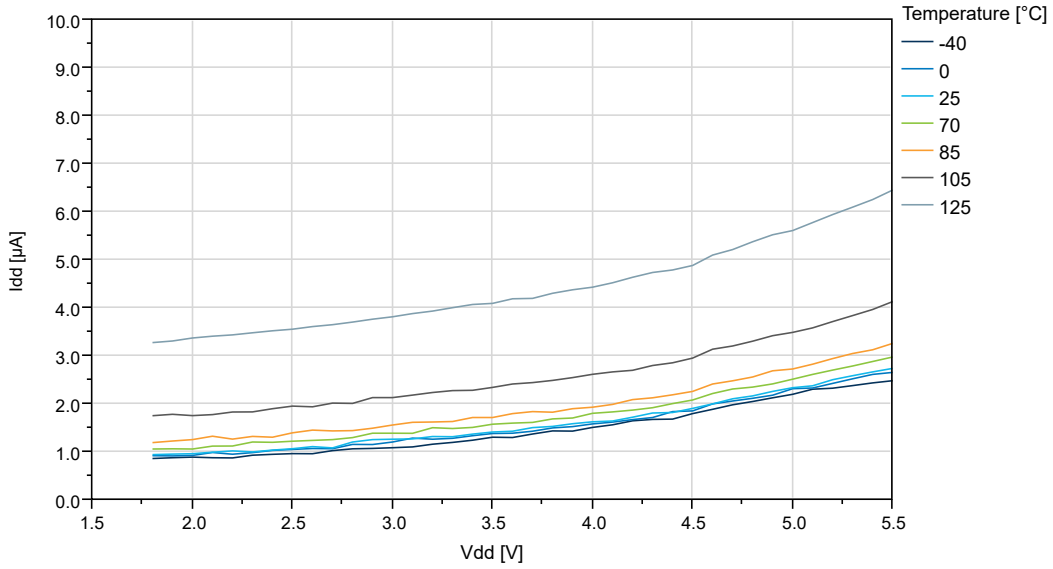

35.1.9 Power on Supply Currents for ATtiny816

Figure 35-31. ATtiny816: Power-on Supply Current vs. V_{DD} (BOD enabled at 4.3V level)

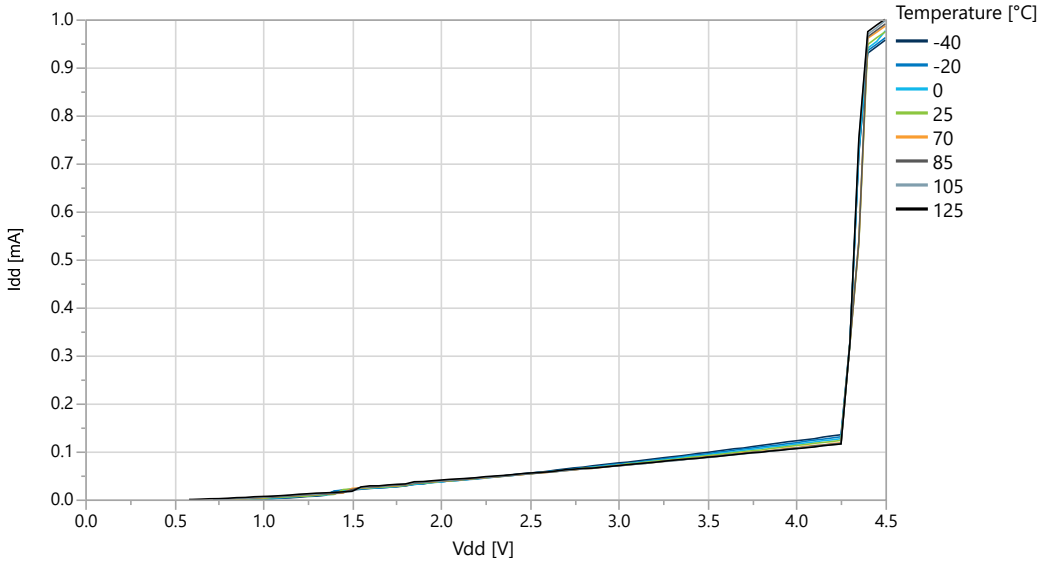

35.2 GPIO

GPIO Input Characteristics

Figure 35-32. IO Pin Input Hysteresis vs. V_{DD}

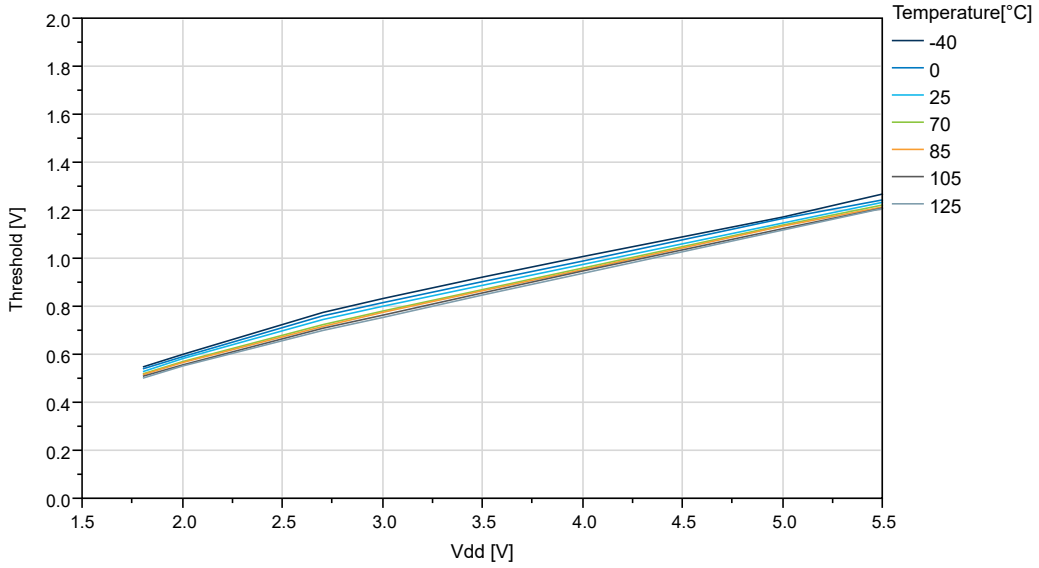

Figure 35-33. IO Pin Input Threshold Voltage vs. V_{DD} (T=25°C)

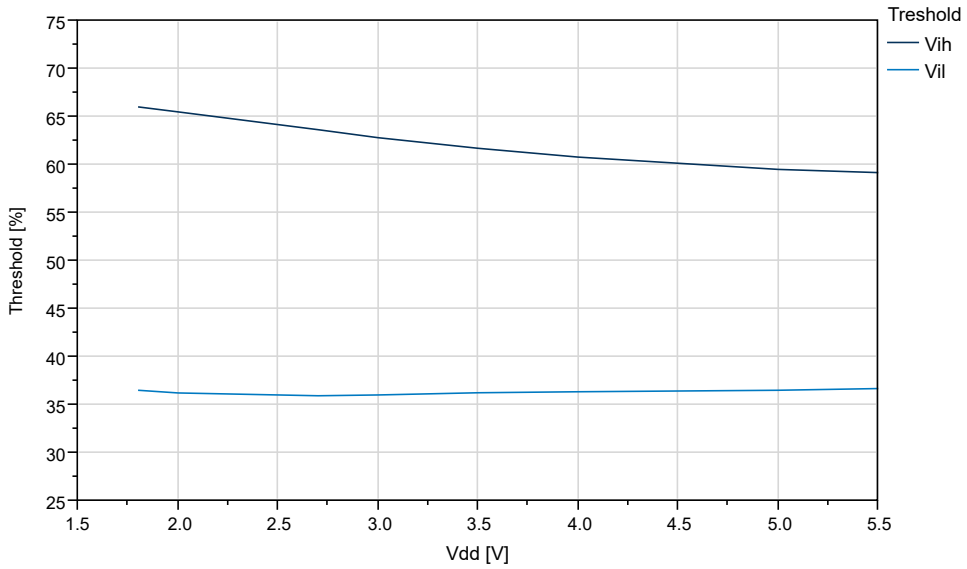

Figure 35-34. IO Pin Input Threshold Voltage vs. V_{DD} (V_{IH})

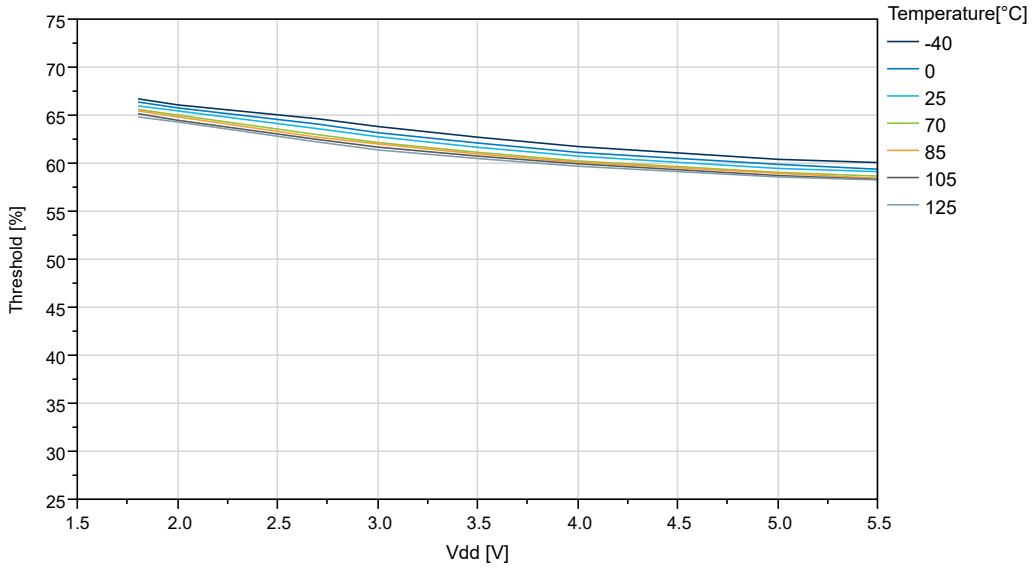

Figure 35-35. IO Pin Input Threshold Voltage vs. V_{DD} (V_{IL})

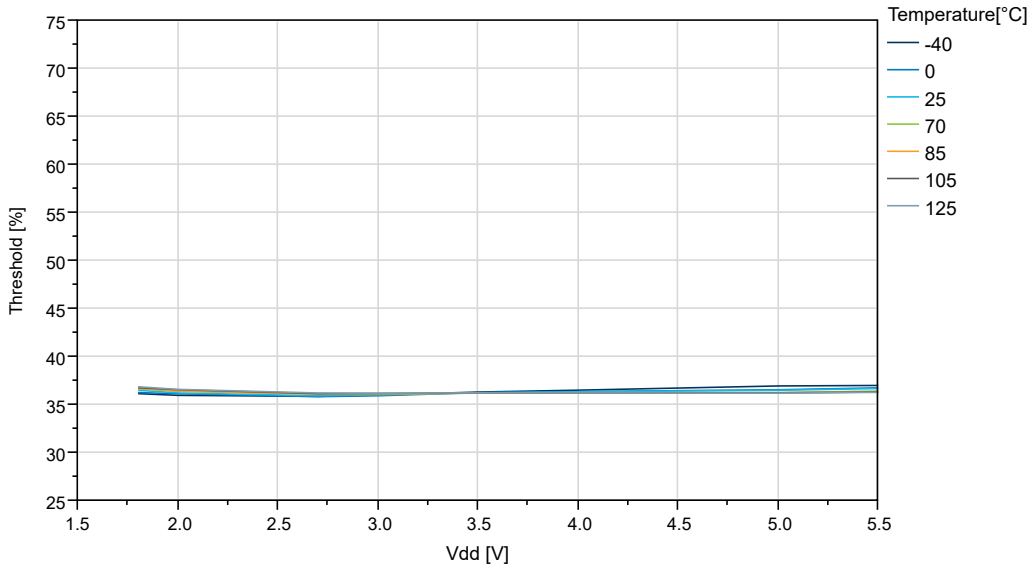

GPIO Output Characteristics

Figure 35-36. IO Pin Output Voltage vs. Sink Current (V_{DD}=1.8V)

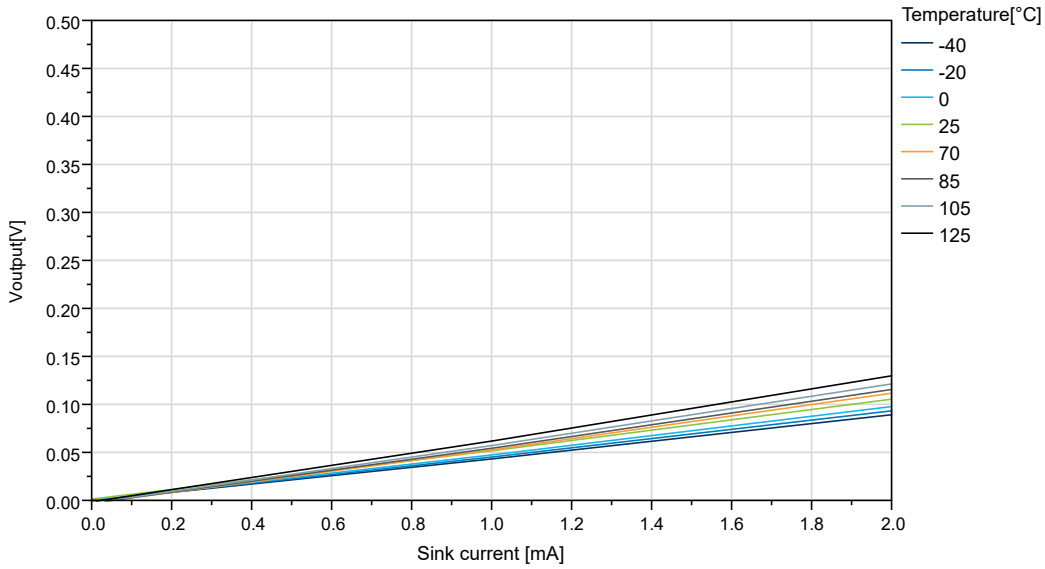

Figure 35-37. IO Pin Output Voltage vs. Sink Current (V_{DD}=3.0V)

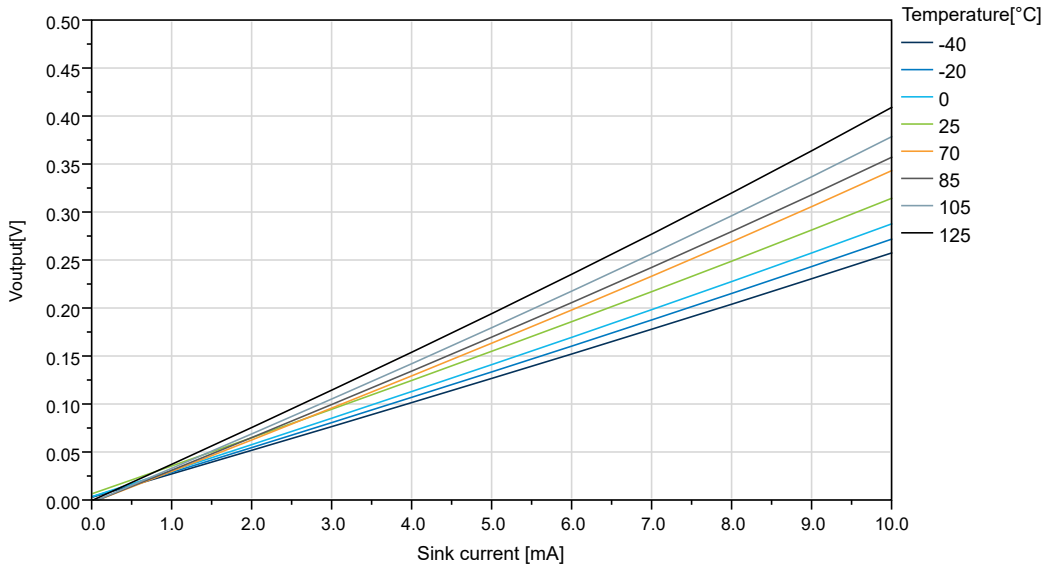

Figure 35-38. IO Pin Output Voltage vs. Sink Current (V_{DD}=5.0V)

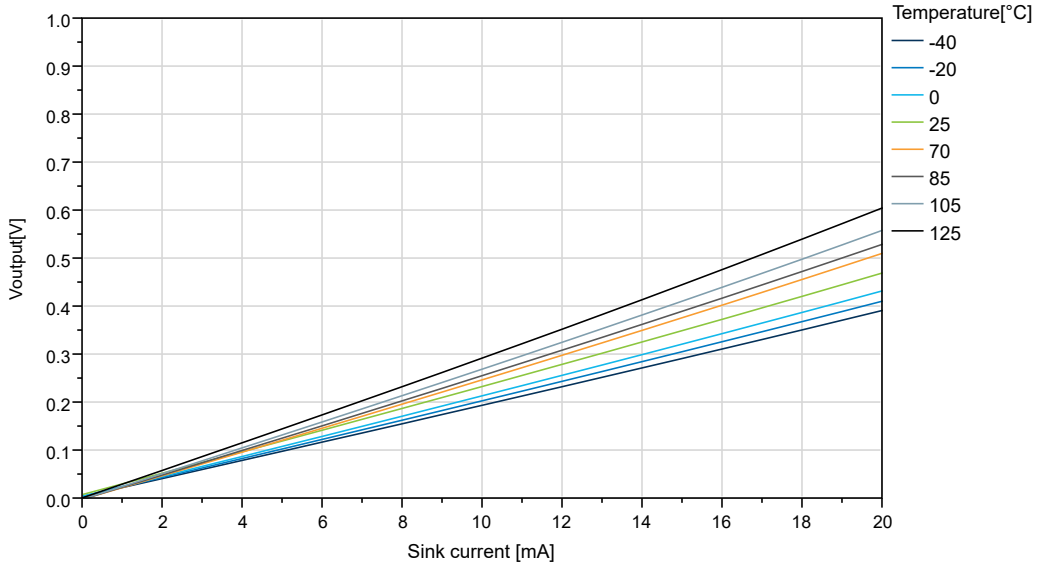

Figure 35-39. : IO Pin Output Voltage vs. Sink Current (T=25°C)

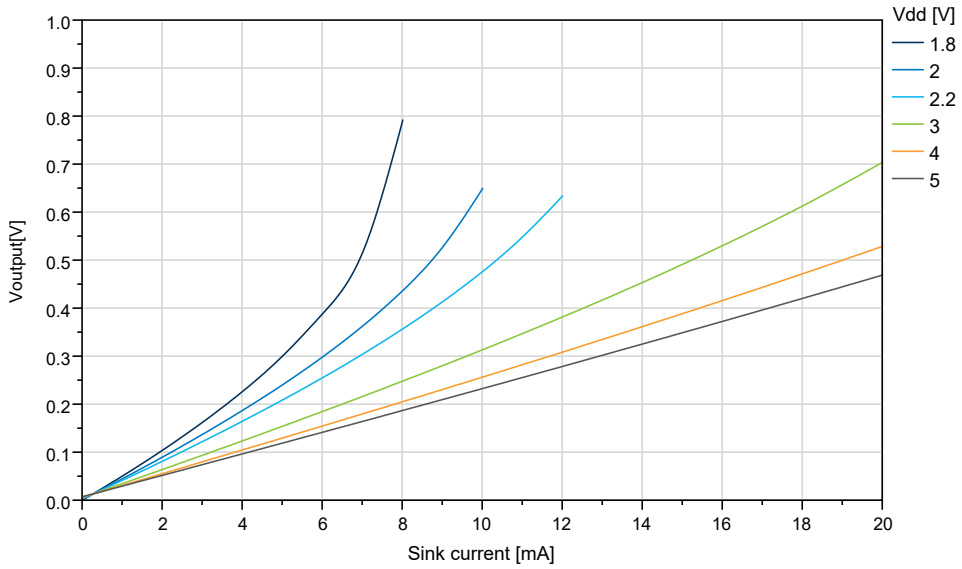

Figure 35-40. IO Pin Output Voltage vs. Source Current (V_{DD}=1.8V)

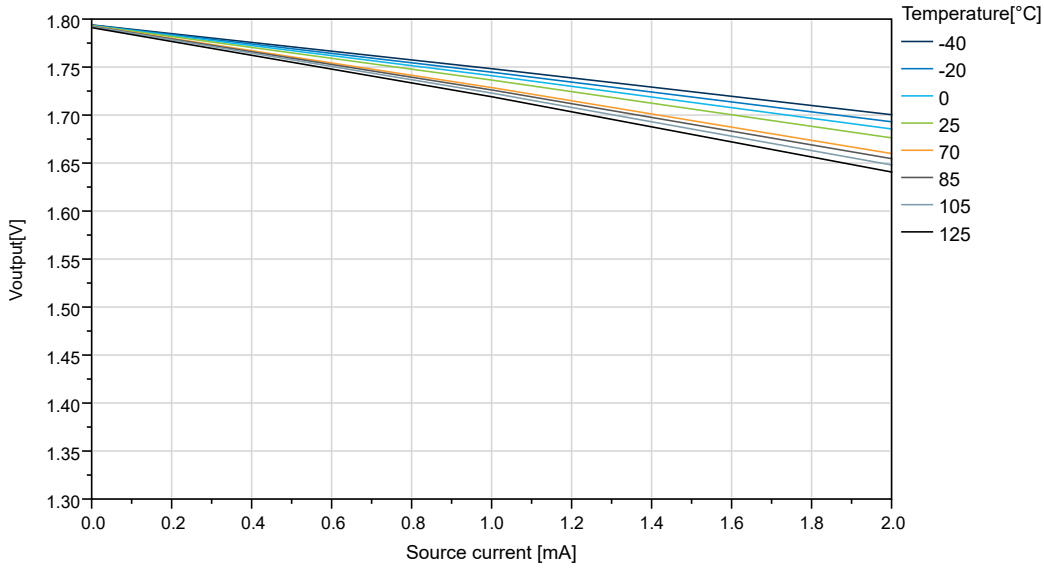

Figure 35-41. IO Pin Output Voltage vs. Source Current (V_{DD}=3.0V)

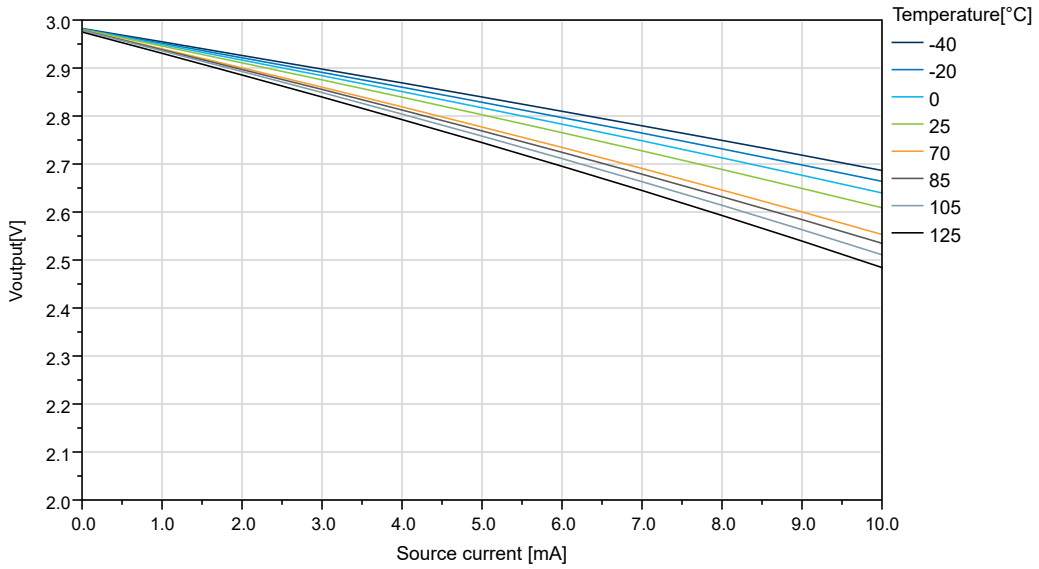

Figure 35-42. IO Pin Output Voltage vs. Source Current (V_{DD}=5.0V)

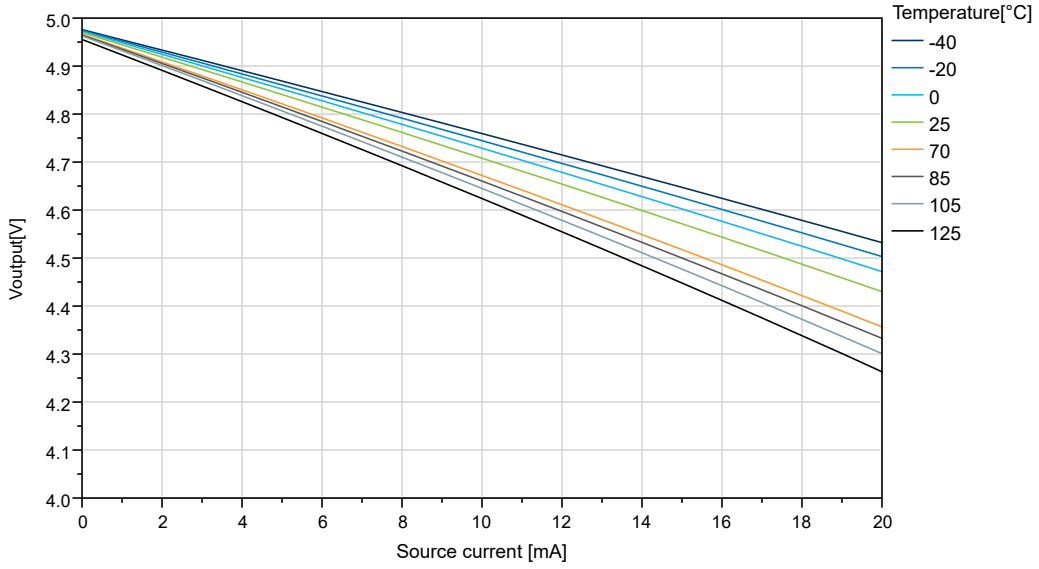

Figure 35-43. IO Pin Output Voltage vs. Source Current (T=25°C)

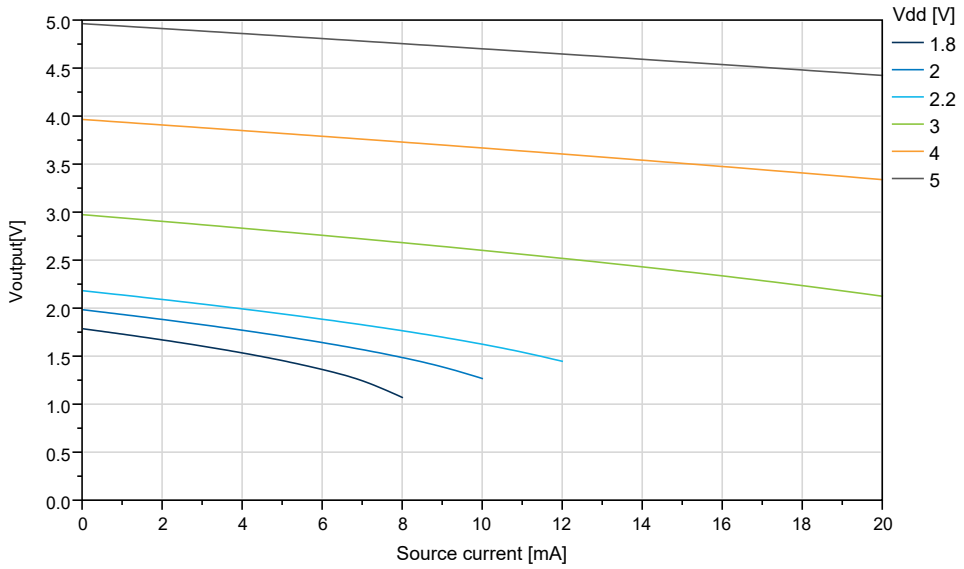

GPIO Pull-Up Characteristics

Figure 35-44. IO Pin Pull-Up Resistor Current vs. Input Voltage (V_{DD}=1.8V)

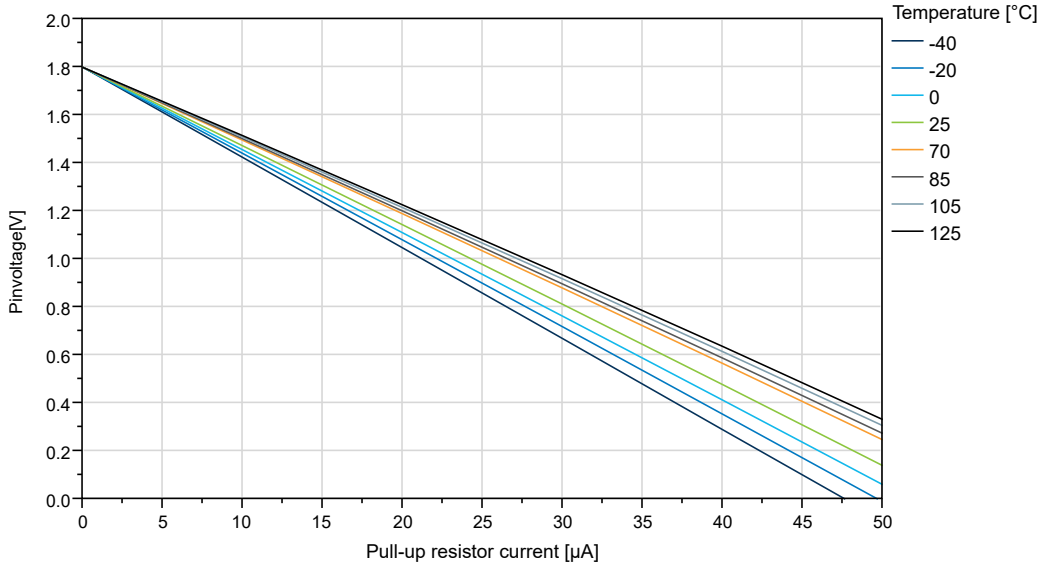

Figure 35-45. IO Pin Pull-Up Resistor Current vs. Input Voltage (V_{DD}=3.0V)

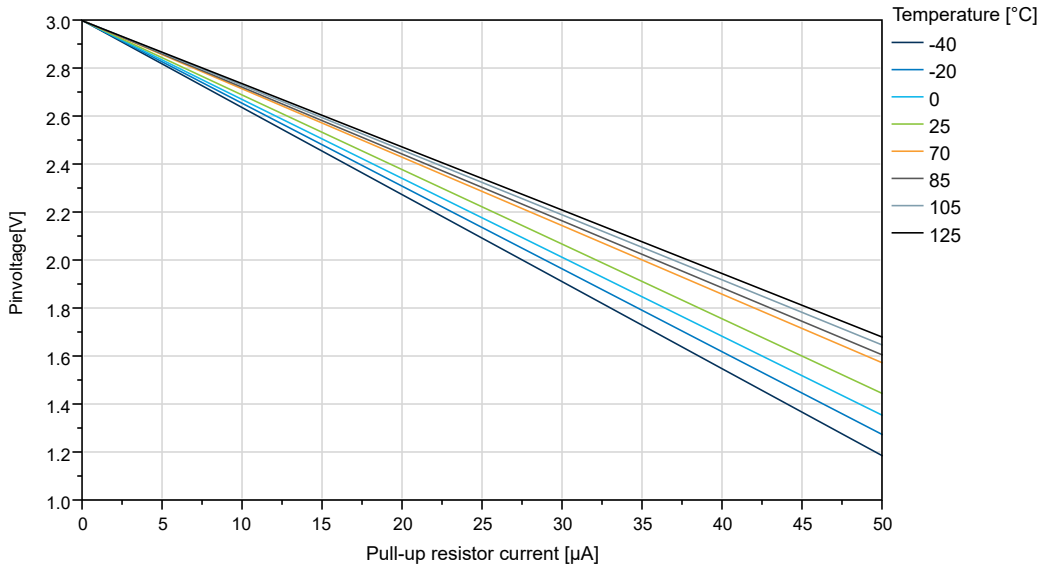

Figure 35-46. IO Pin Pull-Up Resistor Current vs. Input Voltage (V_{DD}=5.0V)

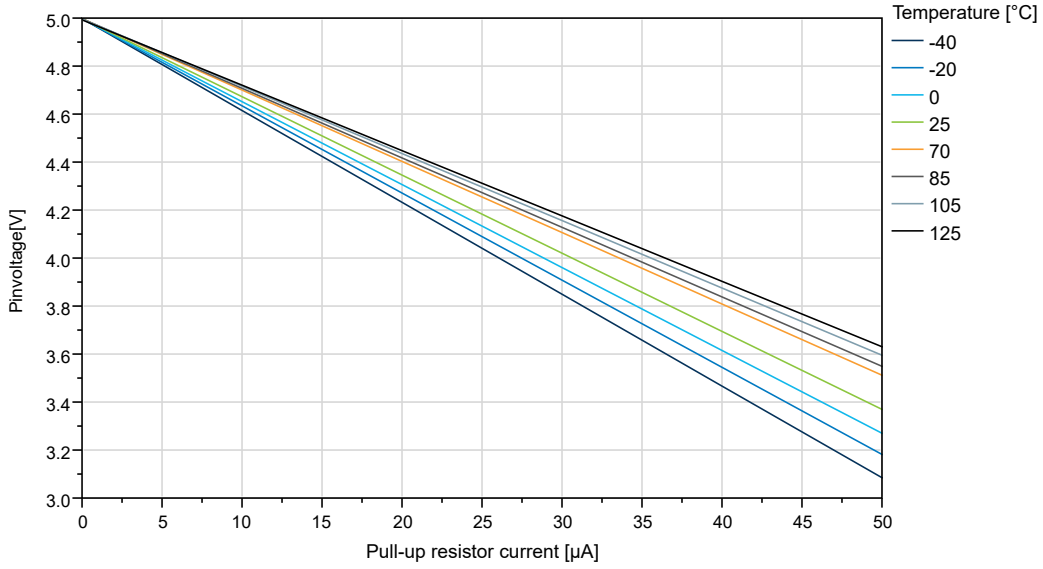

35.3 VREF Characteristics

Figure 35-47. Internal 0.55V Reference vs. Temperature

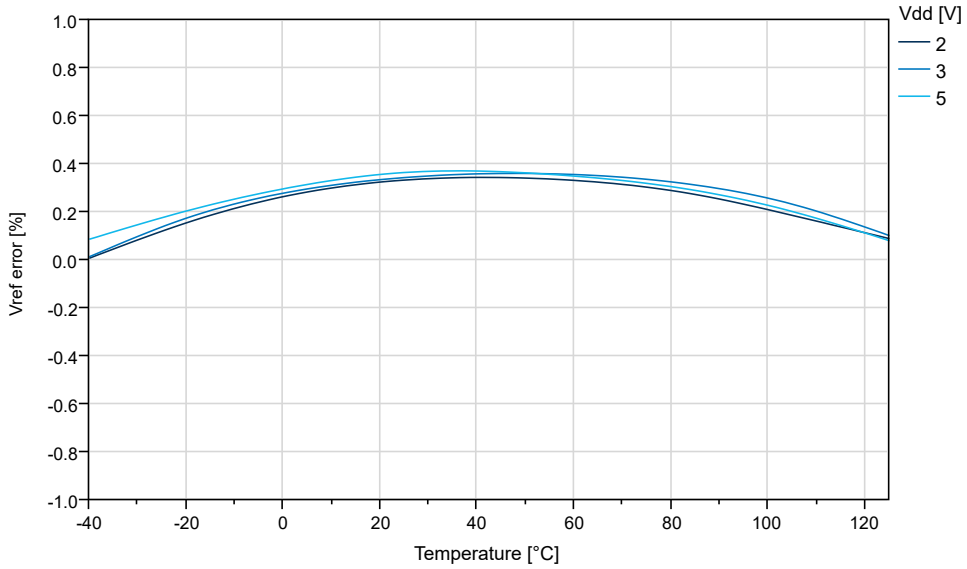

Figure 35-48. Internal 1.1V Reference vs. Temperature

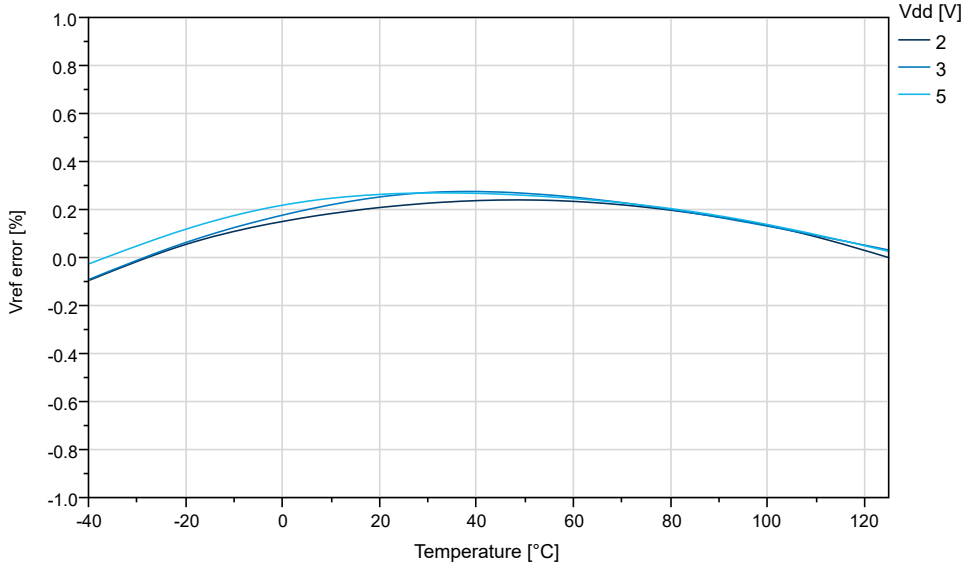

Figure 35-49. Internal 2.5V Reference vs. Temperature

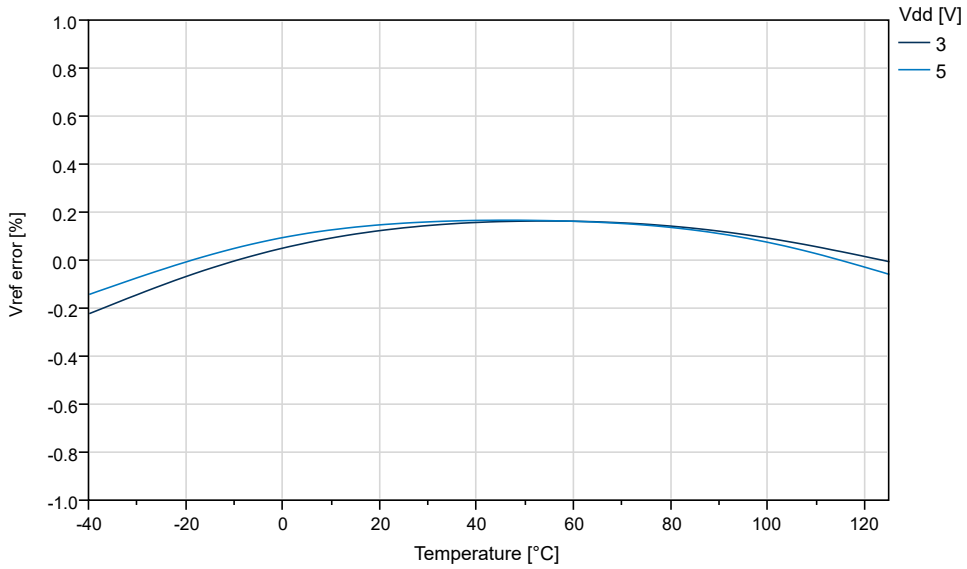

Figure 35-50. Internal 4.3V Reference vs. Temperature

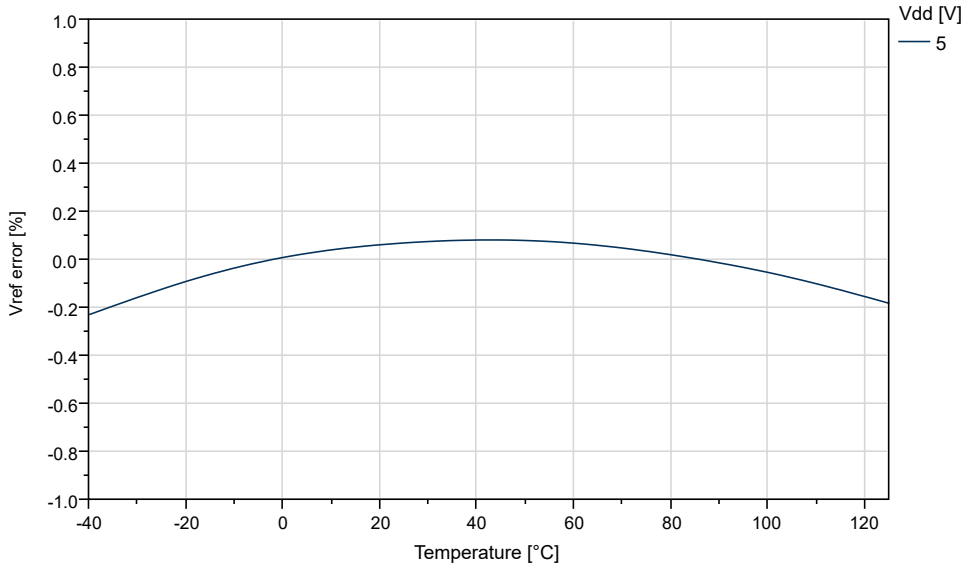

35.4 BOD Characteristics

BOD Current vs. V_{DD}

Figure 35-51. BOD Current vs. V_{DD} (Continuous Mode Enabled)

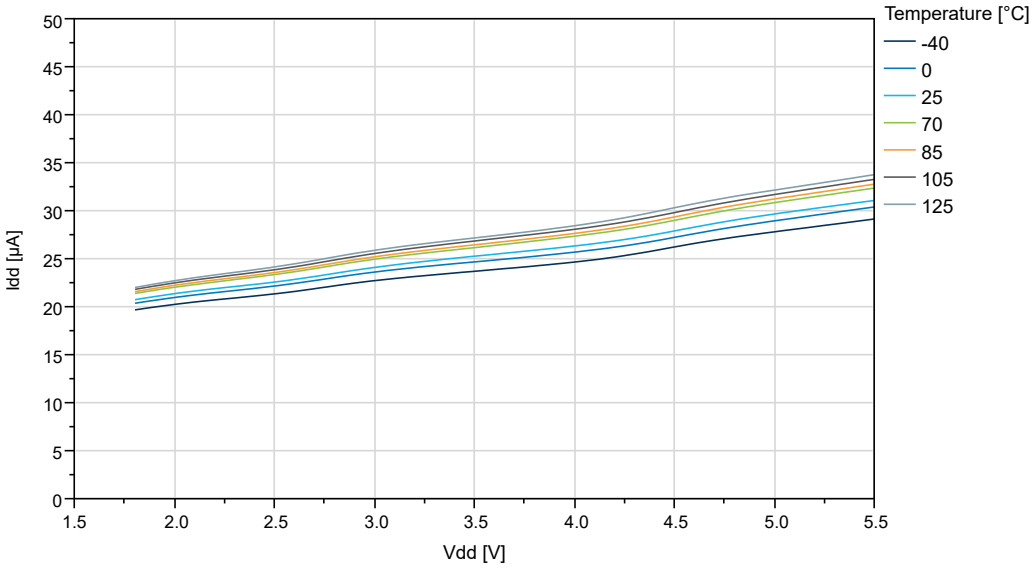

Figure 35-52. BOD Current vs. V_{DD} (Sampled BOD at 125Hz)

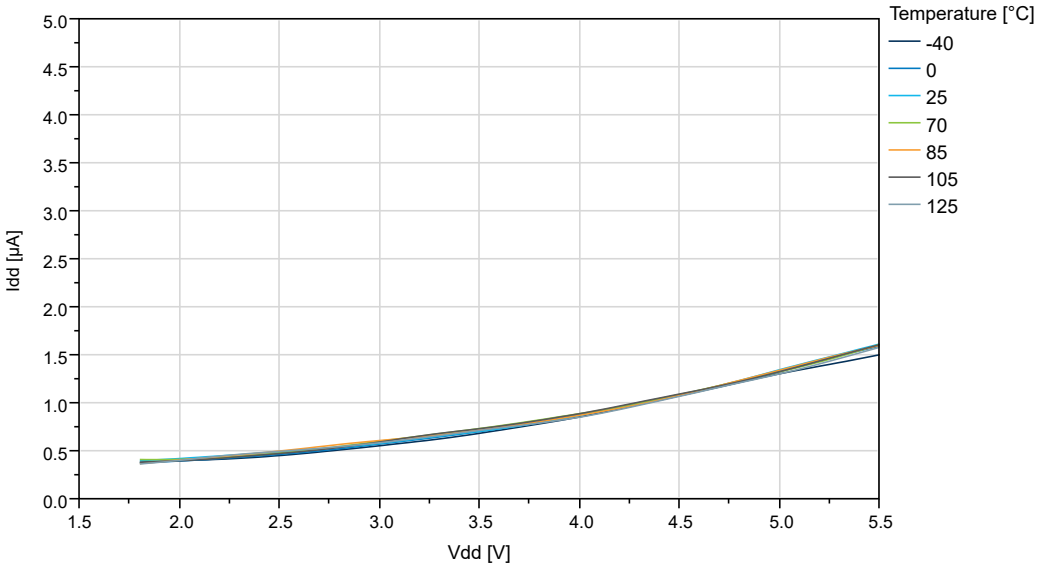

Figure 35-53. BOD Current vs. V_{DD} (Sampled BOD at 1kHz)

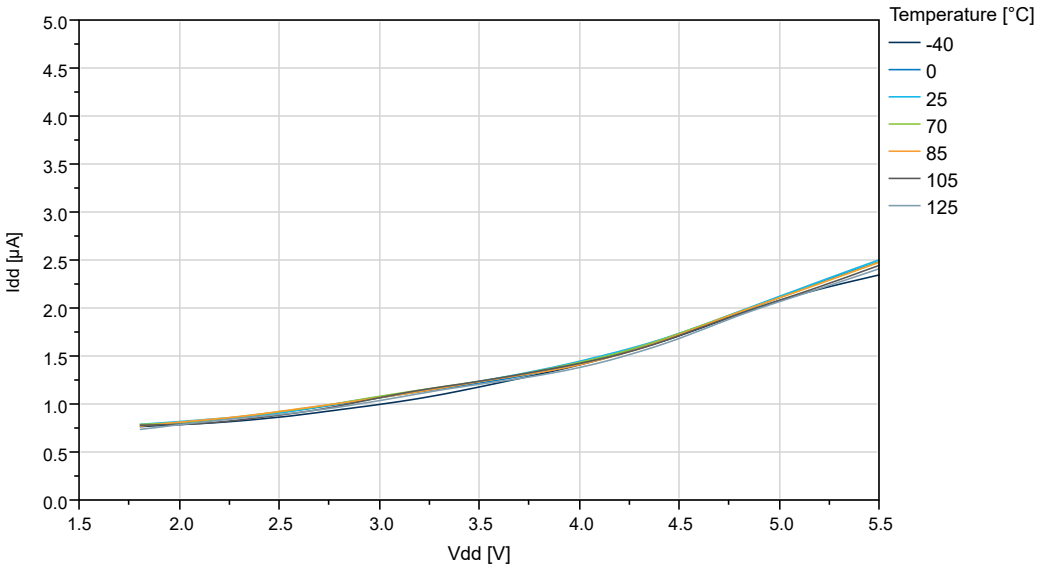

BOD Threshold vs. Temperature

Figure 35-54. BOD Threshold vs. Temperature (Level 1.8V)

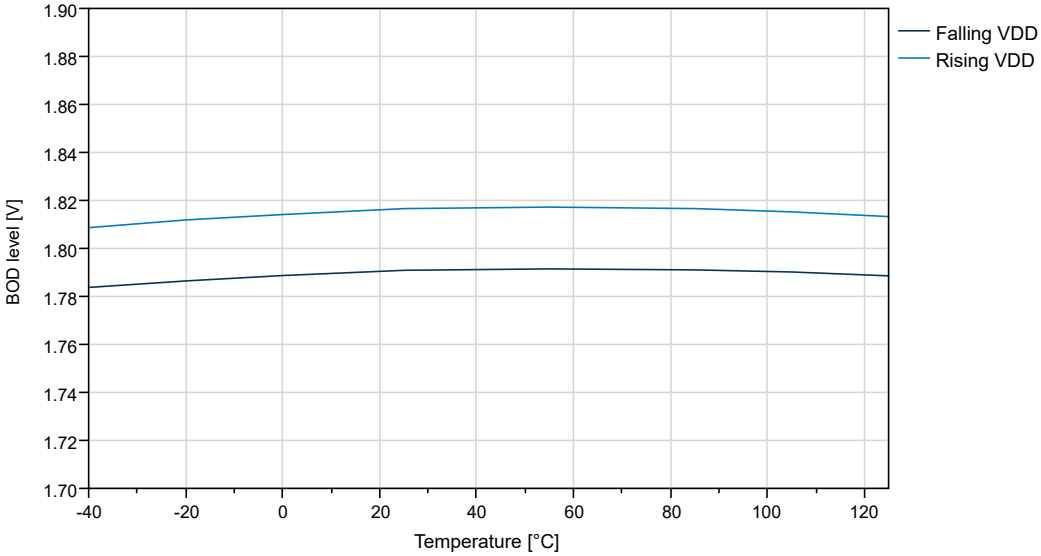

Figure 35-55. BOD Threshold vs. Temperature (Level 2.6V)

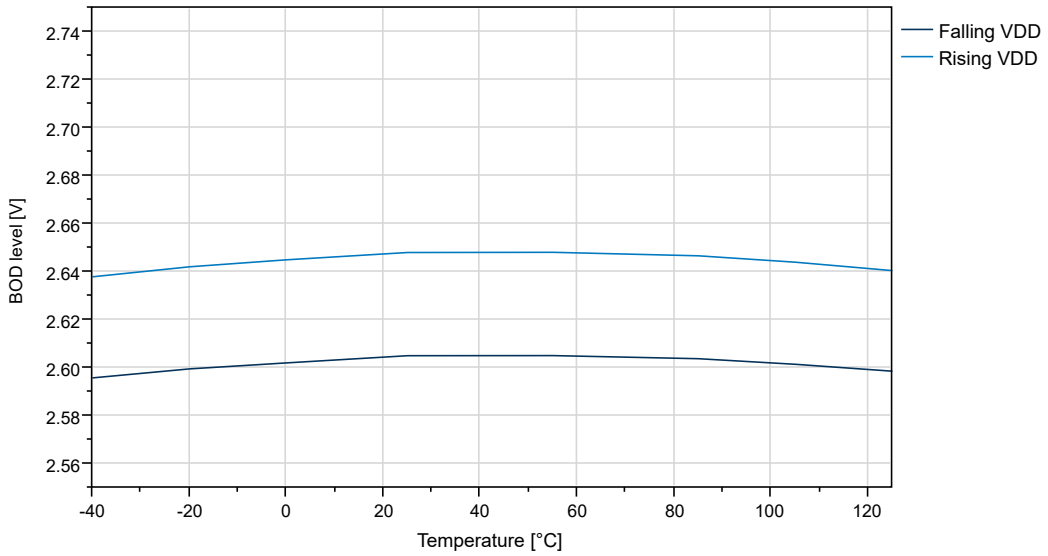

Figure 35-56. BOD Threshold vs. Temperature (Level 4.3V)

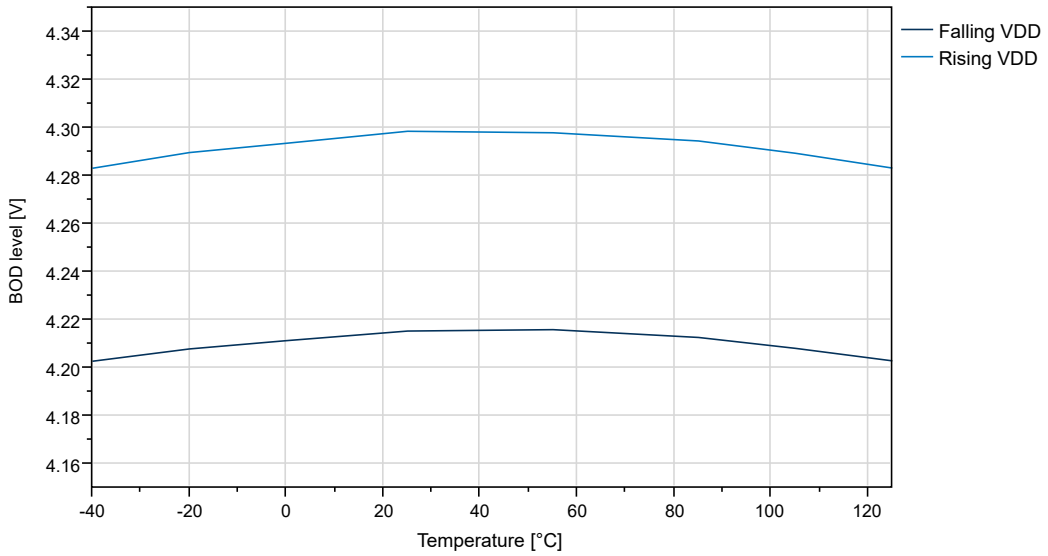

35.5 ADC Characteristics

Figure 35-57. Absolute Accuracy vs. V_{DD} (115ksps) at T=25°C

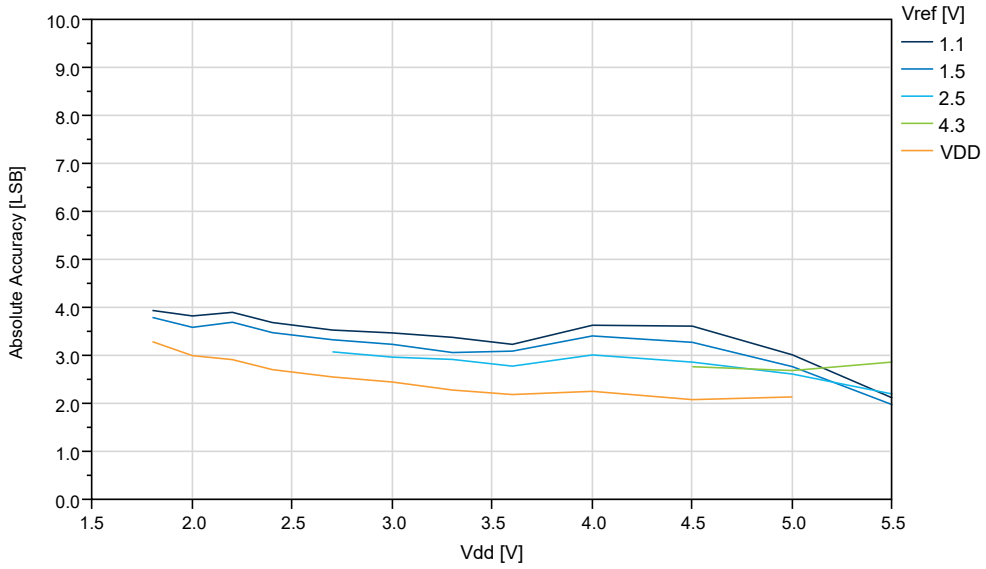

Figure 35-58. Absolute Accuracy vs. V_{ref} (V_{DD}=5.0V, 115ksps)

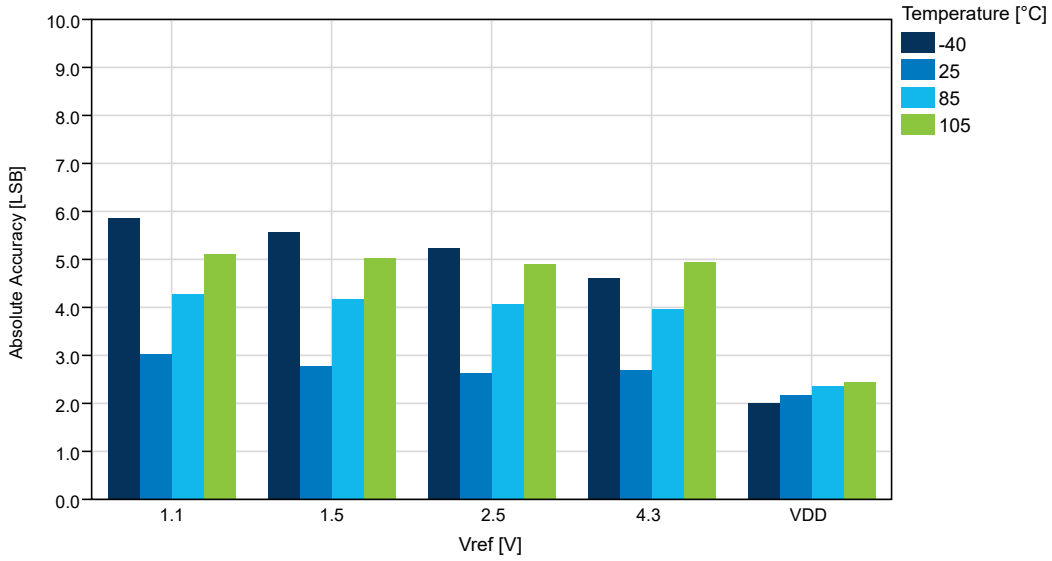

Figure 35-59. DNL Error vs. V_{DD} (115ksps) at T=25°C

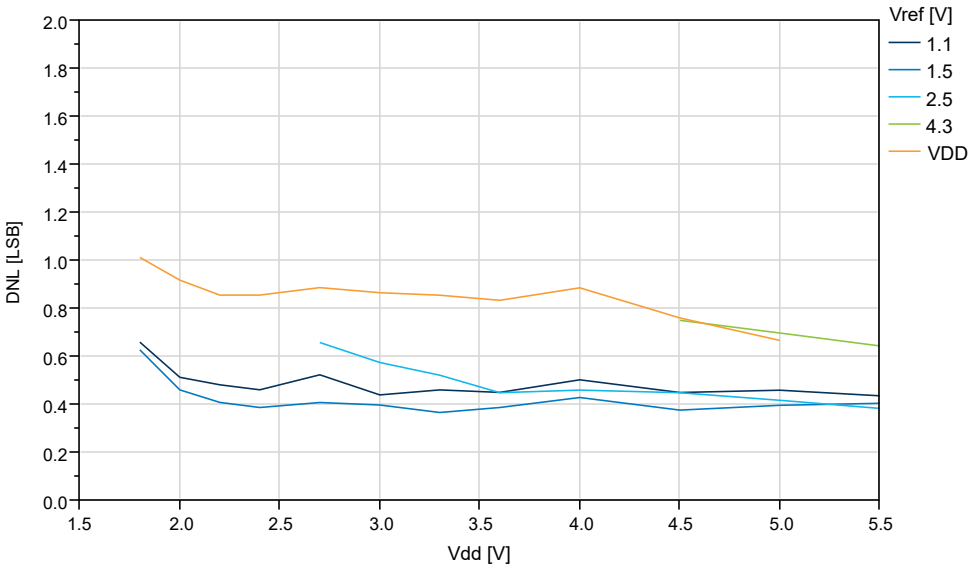

Figure 35-60. DNL vs. V_{ref} (V_{DD}=5.0V, 115ksps)

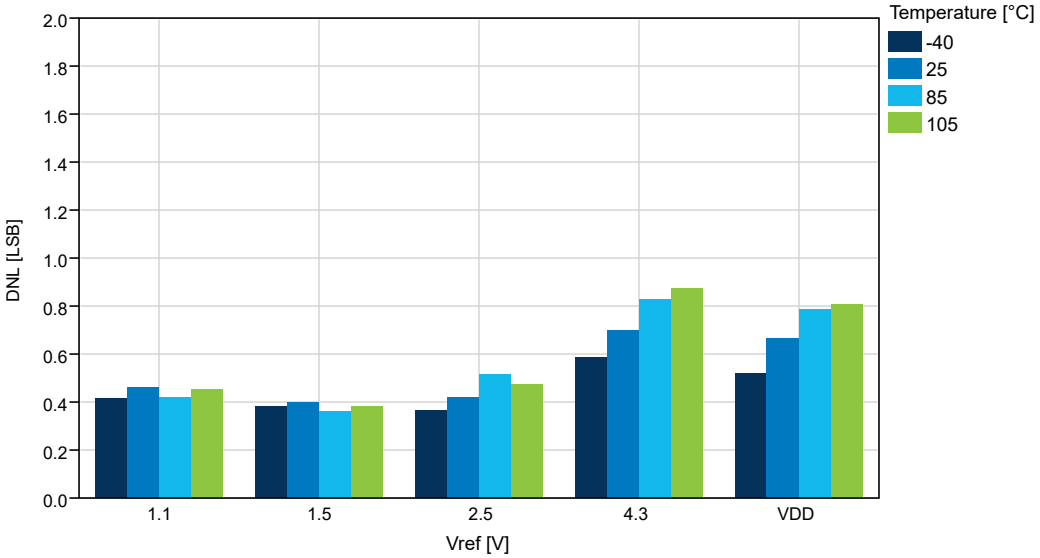

Figure 35-61. Gain Error vs. V_{DD} (115ksps) at T=25°C

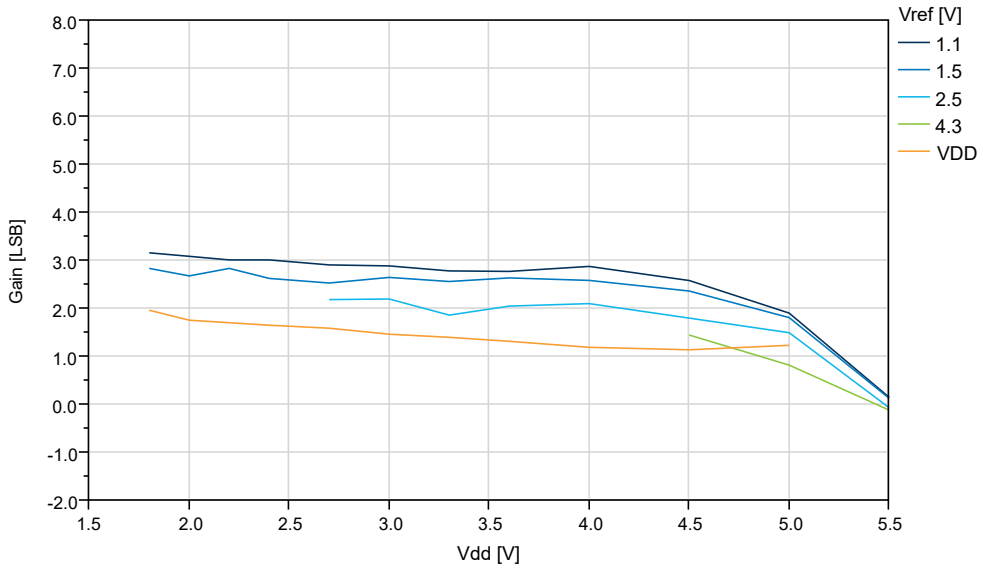

Figure 35-62. Gain Error vs. V_{ref} (V_{DD}=5.0V, 115ksps)

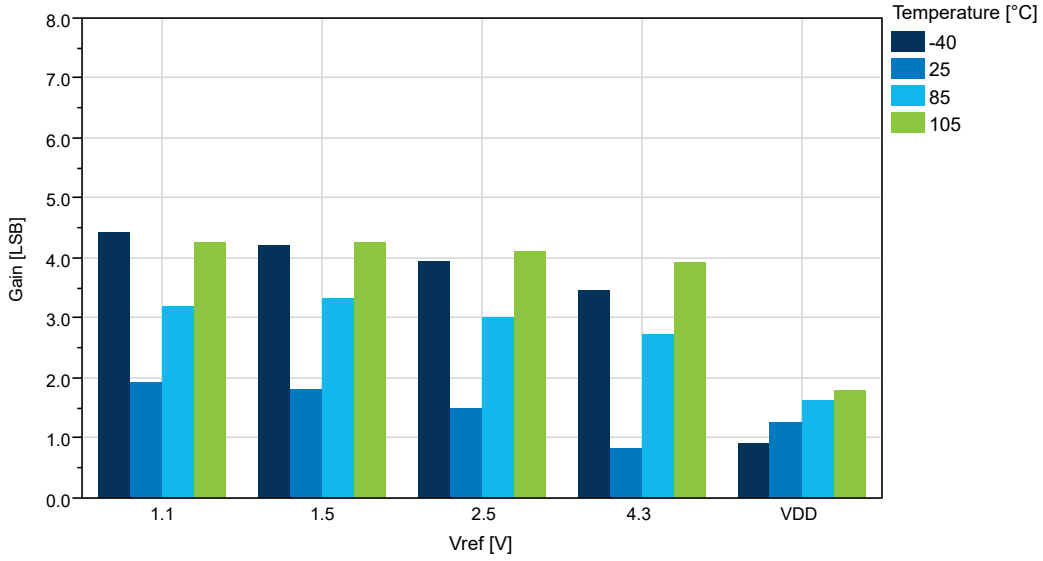

Figure 35-63. INL vs. V_{DD} (115ksps) at T=25°C

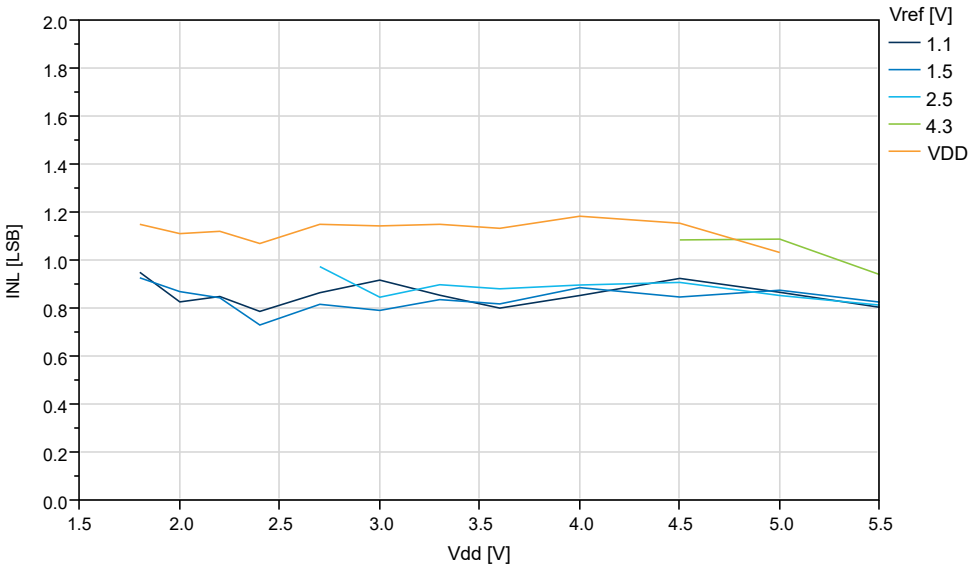

Figure 35-64. INL vs. V_{ref} (V_{DD}=5.0V, 115ksps)

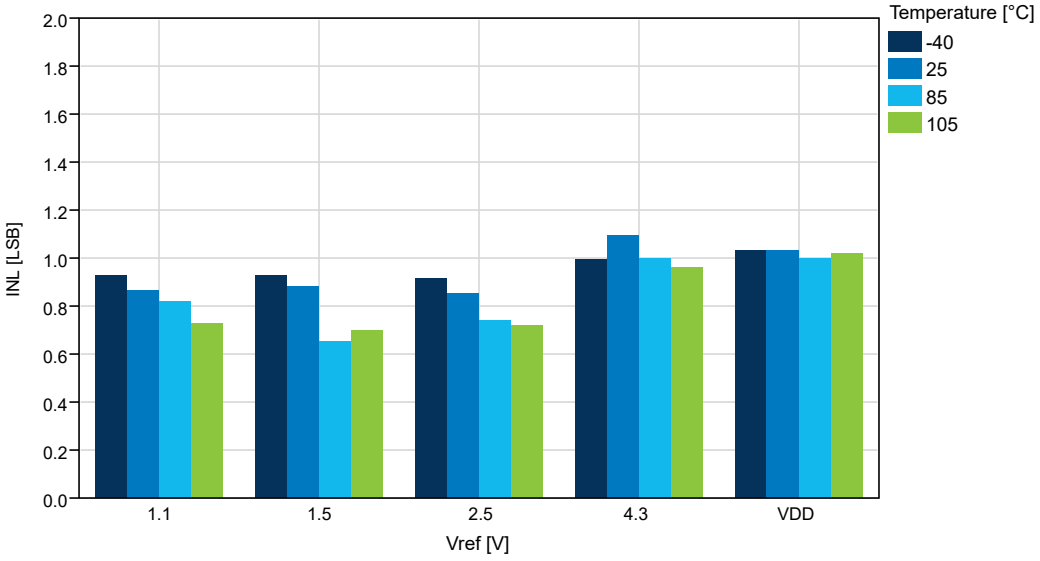

Figure 35-65. Offset Error vs. V_{DD} (115ksps) at T=25°C

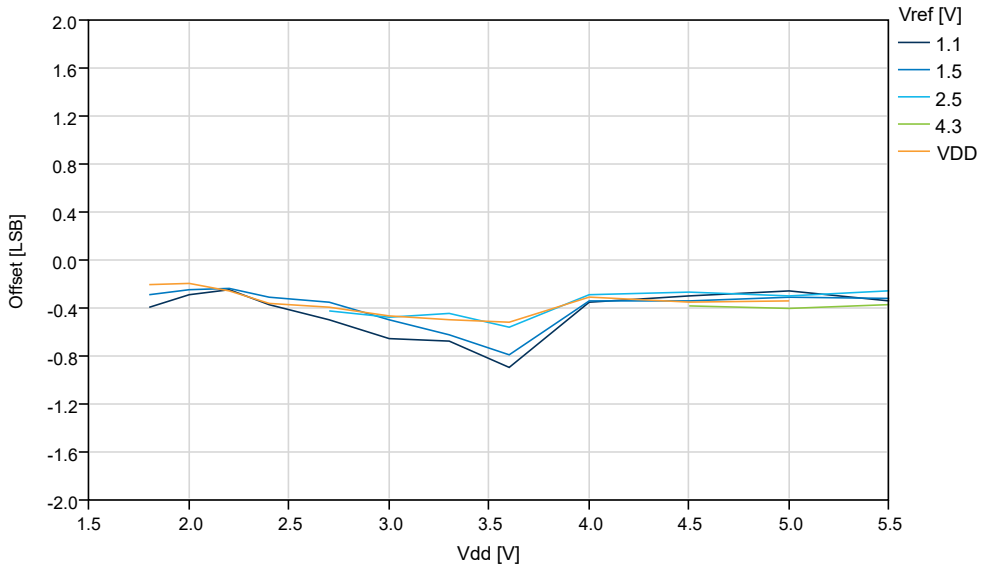

Figure 35-66. Offset Error vs. V_{ref} (V_{DD}=5.0V, 115ksps)

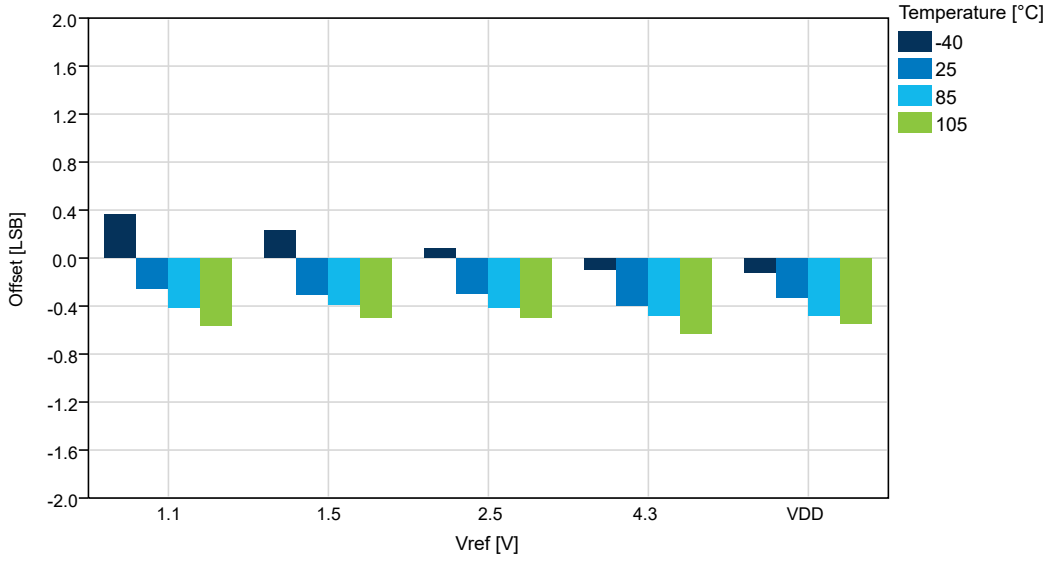

35.6 AC Characteristics

Figure 35-67. Hysteresis vs. V_{CM} - 10mV (V_{DD}=5V)

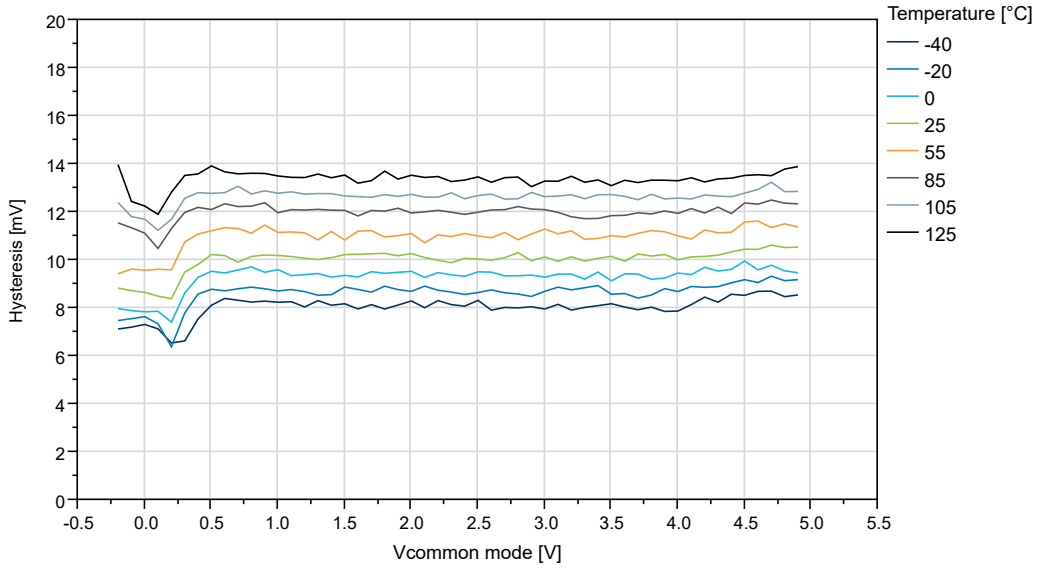

Figure 35-68. Hysteresis vs. V_{CM} - 10mV to 50mV (V_{DD}=5V, T=25°C)

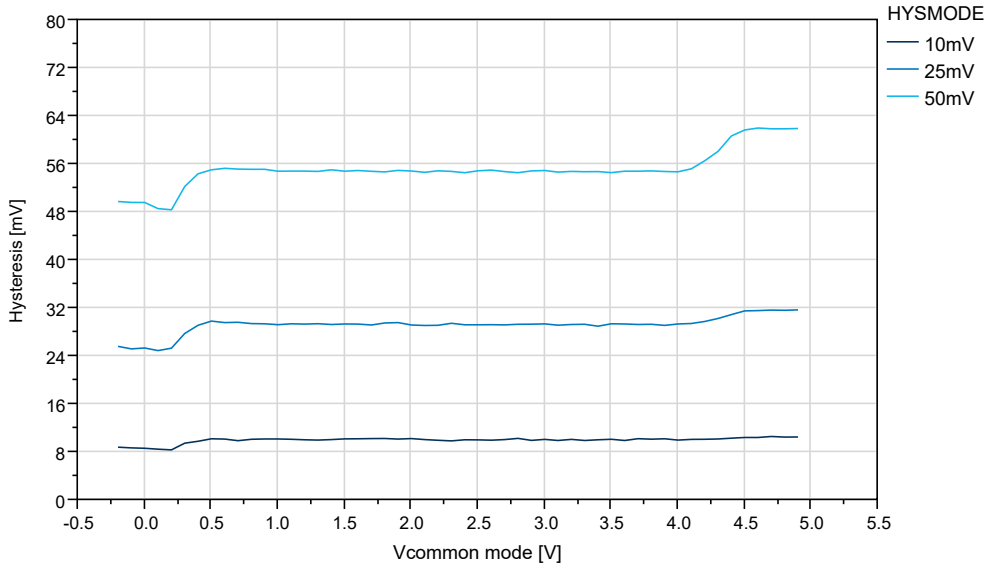

Figure 35-69. Offset vs. V_{CM} - 10mV (V_{DD}=5V)

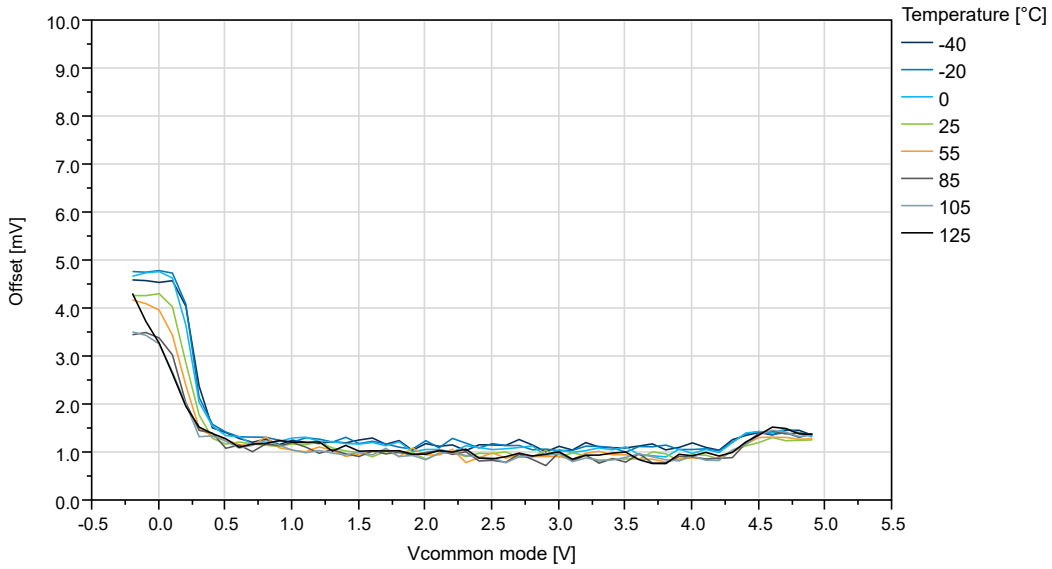

Figure 35-70. Offset vs. V_{CM} - 10mV to 50mV (V_{DD}=5V, T=25°C)

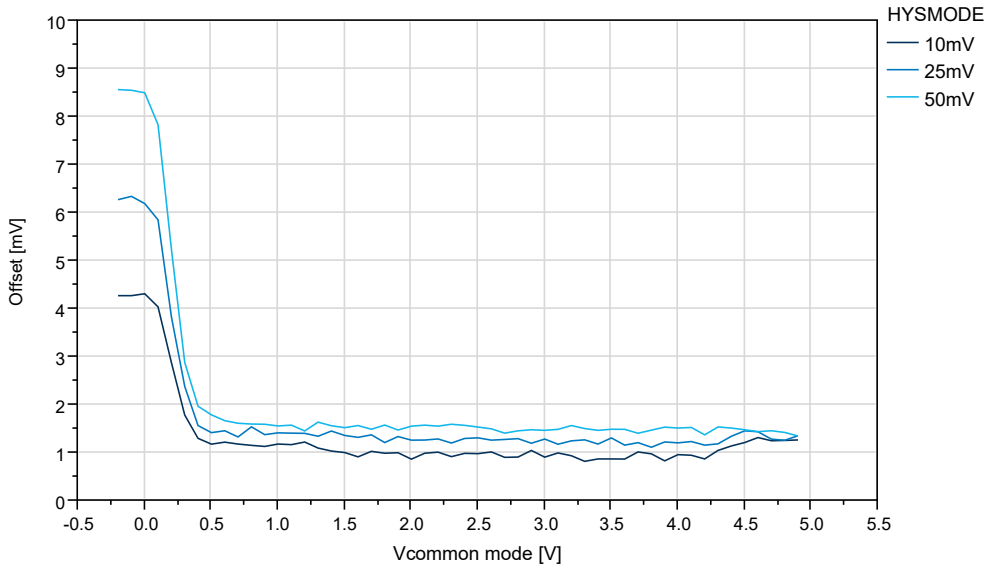

35.7 OSC20M Characteristics

Figure 35-71. OSC20M Internal Oscillator: Calibration Stepsize vs. Calibration Value (V_{DD}=3V)

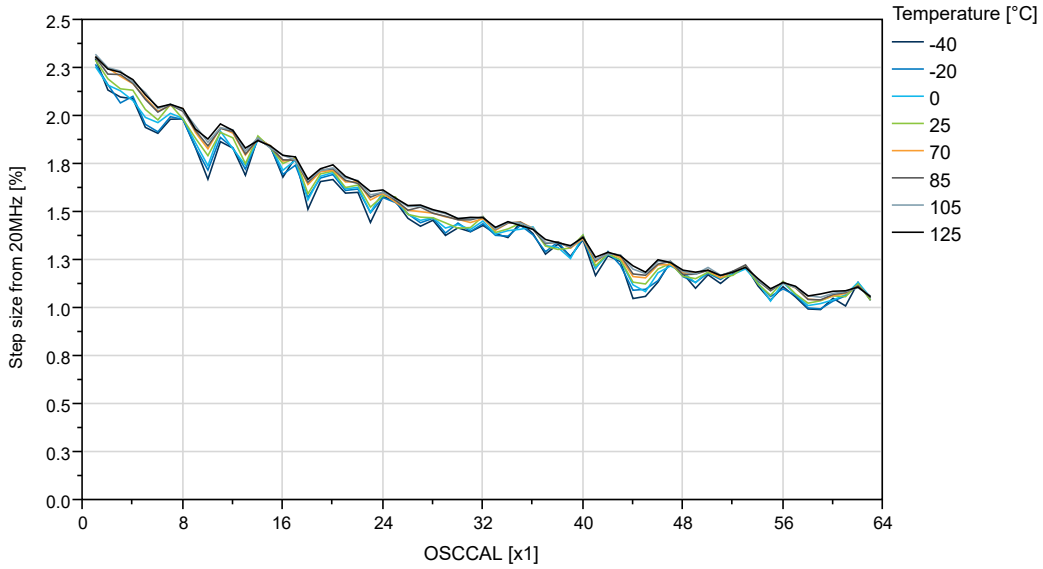

Figure 35-72. OSC20M internal Oscillator: Frequency vs. Calibration Value (V_{DD}=3V)

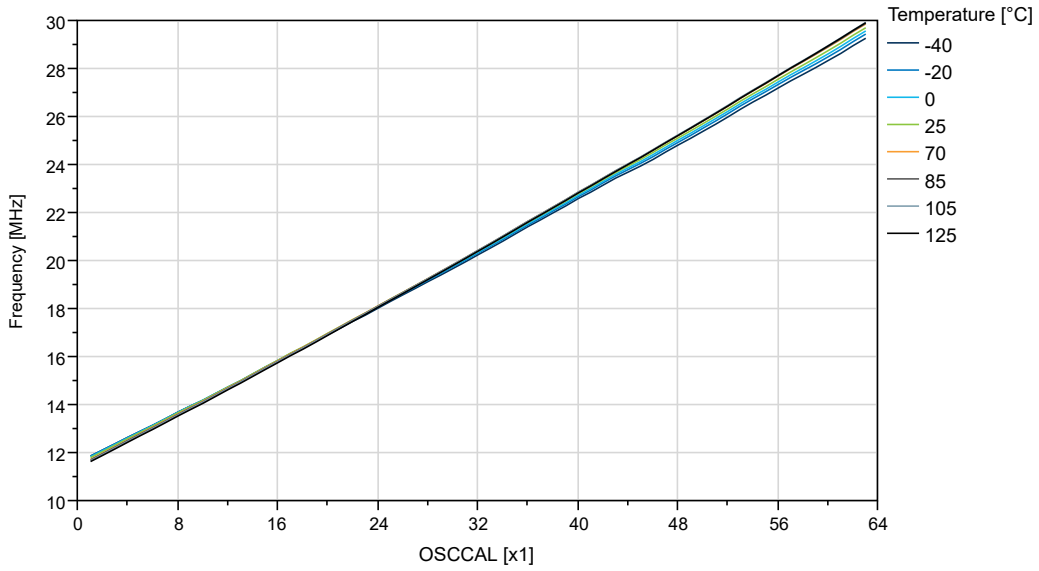

Figure 35-73. OSC20M Internal Oscillator: Frequency vs. Temperature

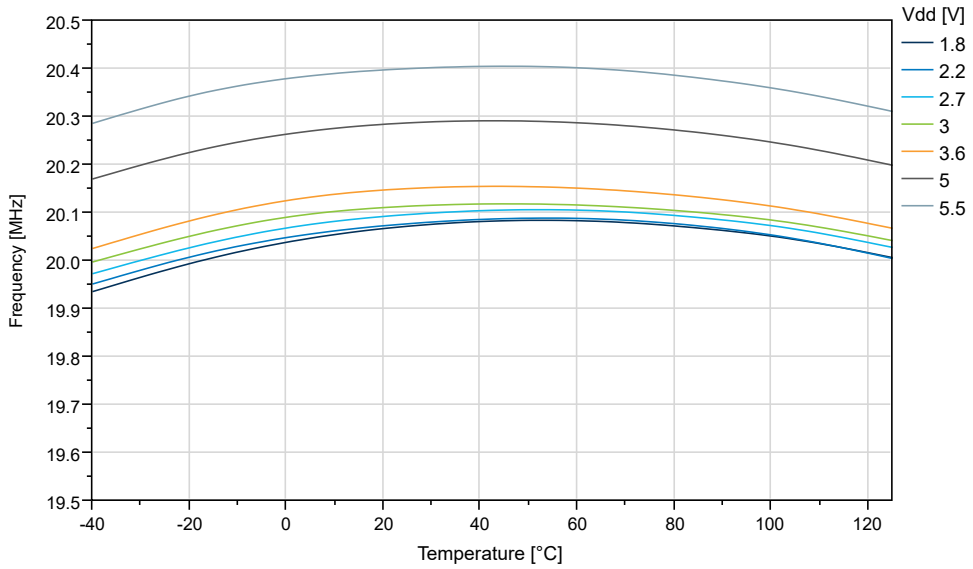

Figure 35-74. OSC20M Internal Oscillator: Frequency vs. V_{DD}

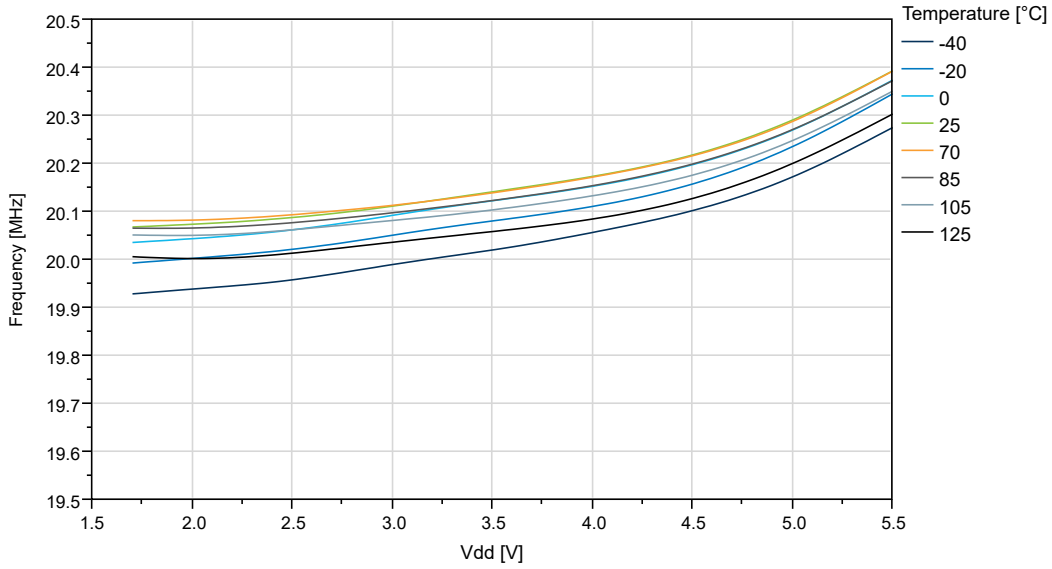

35.8 OSCULP32K Characteristics

Figure 35-75. OSCULP32K Internal Oscillator Frequency vs. Temperature

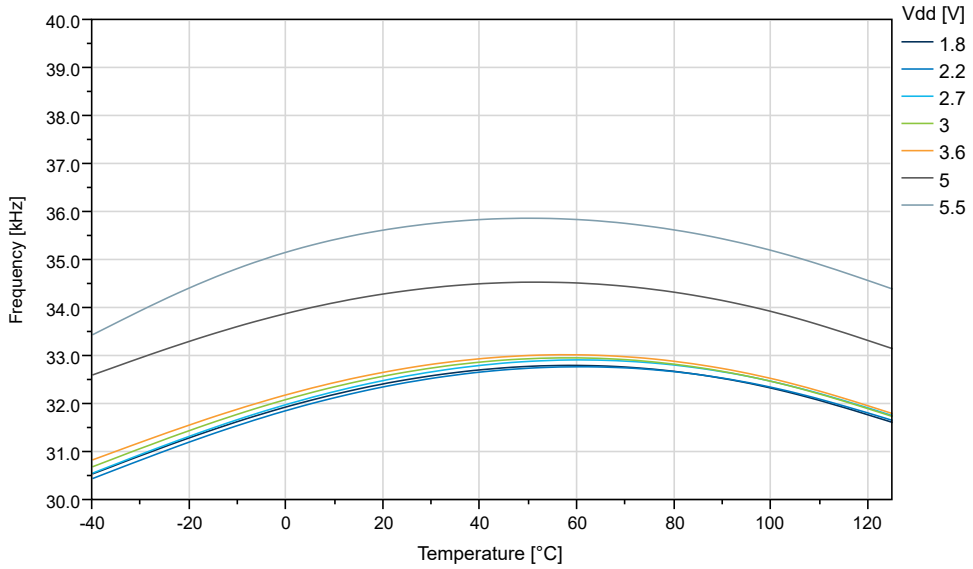

Figure 35-76. OSCULP32K Internal Oscillator Frequency vs. V_{DD}

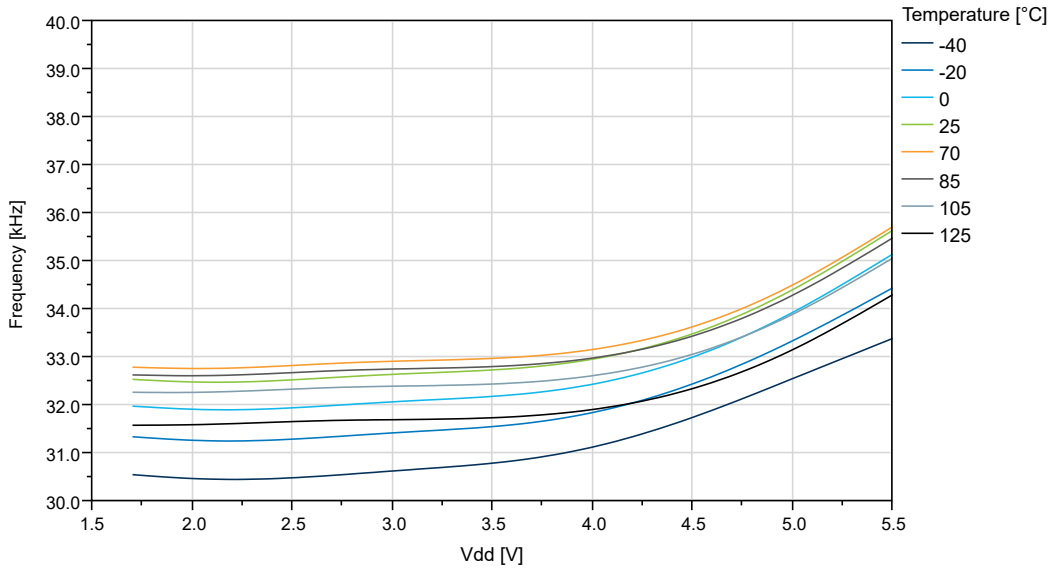

35.9 TWI SDA Hold timing for ATtiny816

Figure 35-77. TWI SDA Holdtime vs temperature (Slave mode) V_{DD} = 3V, CLK_{CPU} = 10MHz

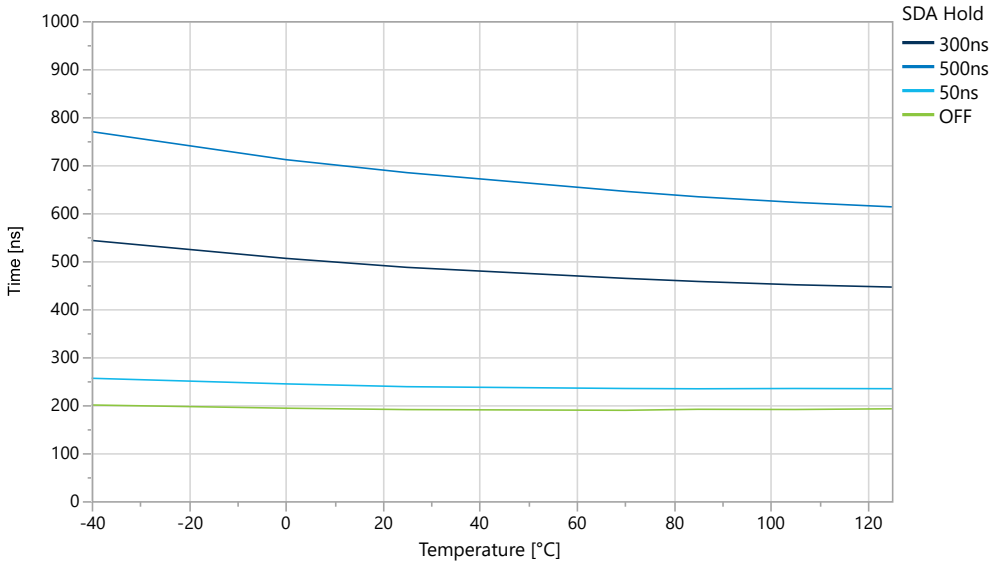

35.10 PTC Characteristics for ATtiny816

Figure 35-78. I_{DD} vs Filterlevel over Scanrates. T=25°C, V_{DD} = 3.0V, Drift cal off

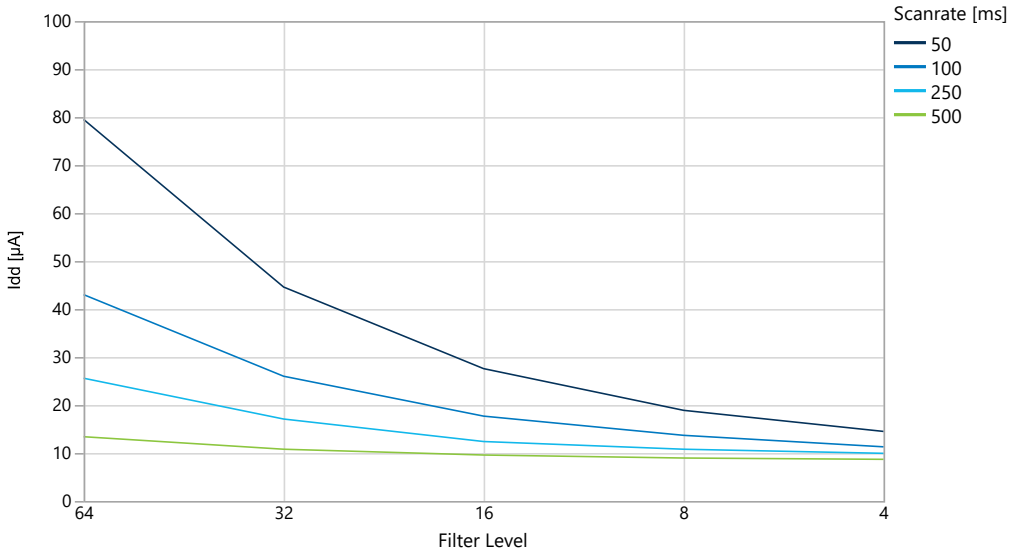

Figure 35-79. I_{DD} vs Temperature over Scanrates. Filterlevel = 16, V_{DD} = 3.0V, Drift cal off.

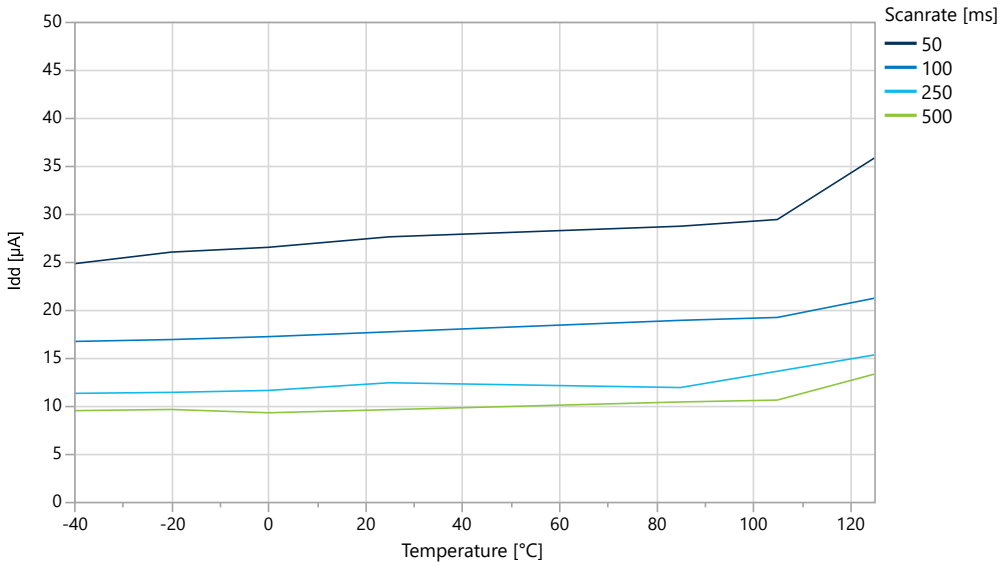

Figure 35-80. I_{DD} vs V_{DD} over Scanrates. Filterlevel = 16, T=25°C, Drift cal off.

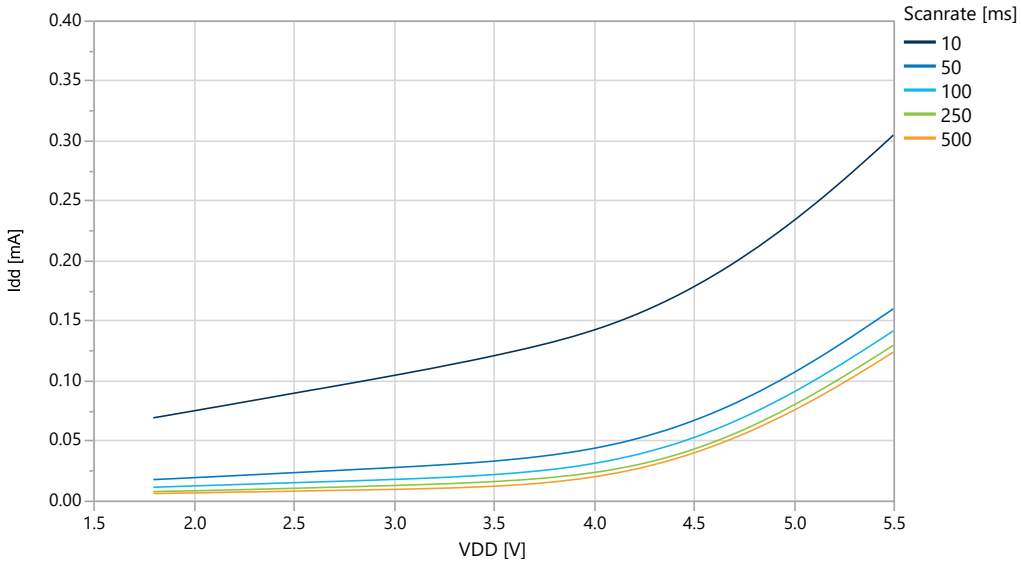

Figure 35-81. I_{DD} vs V_{DD} over Scanrates. Filterlevel = 4, T=25°C, Drift cal off.

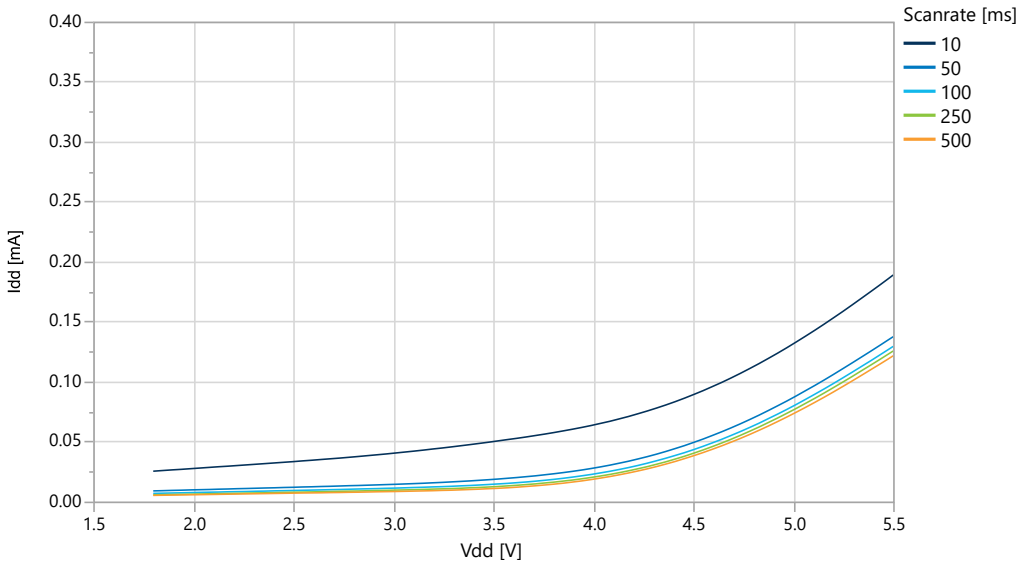

36. Ordering Information

- Available ordering options can be found by:
  - Clicking on one of the following product page links:
    - ATtiny416 Product Page
    - ATtiny816 Product Page
  - Searching by product name at microchipdirect.com.
  - Contacting your local sales representative.

36.1 Product Information

Note: For the latest information on available ordering codes, refer to the ATtiny416/816 Silicon Errata and Data Sheet Clarification Document found on the product page.

Ordering Code[1]	Flash/SRAM	Max CPU Speed	Supply Voltage	Package Type[2,3]	Temperature Range
ATtiny416-MNR	4 KB/256B	20 MHz	1.8V to 5.5V	VQFN	-40°C to +105°C
ATtiny416-MFR	4 KB/256B	16 MHz	2.7V to 5.5V	VQFN	-40°C to +125°C
ATtiny416-SNR	4 KB/256B	20 MHz	1.8V to 5.5V	SOIC	-40°C to +105°C
ATtiny416-SN	4 KB/256B	20 MHz	1.8V to 5.5V	SOIC	-40°C to +105°C
ATtiny416-SFR	4 KB/256B	16 MHz	2.7V to 5.5V	SOIC	-40°C to +125°C
ATtiny416-SF	4 KB/256B	16 MHz	2.7V to 5.5V	SOIC	-40°C to +125°C
ATtiny816-MNR	8 KB/512B	20 MHz	1.8V to 5.5V	VQFN	-40°C to +105°C
ATtiny816-MN	8 KB/512B	20 MHz	1.8V to 5.5V	VQFN	-40°C to +105°C
ATtiny816-MFR	8 KB/512B	16 MHz	2.7V to 5.5V	VQFN	-40°C to +125°C
ATtiny816-MF	8 KB/512B	16 MHz	2.7V to 5.5V	VQFN	-40°C to +125°C
ATtiny816-SNR	8 KB/512B	20 MHz	1.8V to 5.5V	SOIC	-40°C to +105°C
ATtiny816-SN	8 KB/512B	20 MHz	1.8V to 5.5V	SOIC	-40°C to +105°C
ATtiny816-SFR	8 KB/512B	16 MHz	2.7V to 5.5V	SOIC	-40°C to +125°C
ATtiny816-SF	8 KB/512B	16 MHz	2.7V to 5.5V	SOIC	-40°C to +125°C

Note:

1. Pb-free packaging complies to the European Directive for Restriction of Hazardous Substances (RoHS directive). Also Halide free and fully Green.
2. Available in Tape & Reel, Tube or Tray packing media
3. Package outline drawings can be found in the *Package Drawings* chapter

36.2 Product Identification System

To order or obtain information, for example, on pricing or delivery, refer to the factory or the listed sales office.

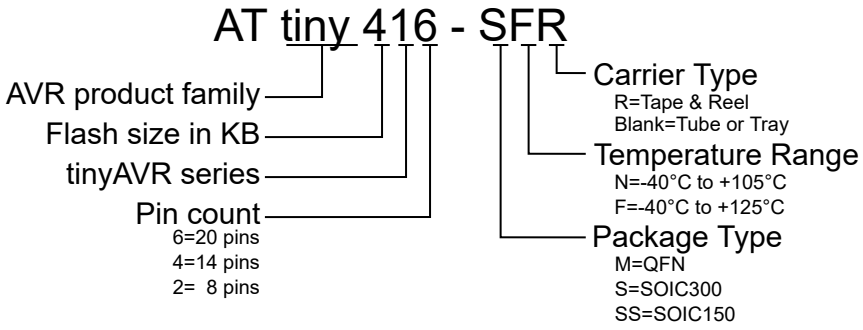

37. Packaging Information

37.1 Package Drawings

37.1.1 Online Package Drawings

For the most recent package drawings:

1. Go to http://www.microchip.com/packaging.
2. Go to the package type specific page, for example VQFN.
3. Search for either Drawing Number, Style or GPC to find updated drawing.

Table 37-1. Drawing Numbers

Package Type	Drawing Number(1)	Style	Atmel Legacy GPC	Comment
SOIC20	C04-21323	G5X	SRJ	-
VQFN20	C04-21380	REB	ZCL	-

Note:

1. If the drawing number is not found online, the drawing present in the datasheet is the newest one.

37.1.2 20-Pin SOIC300

20-Lead Small Outline Integrated Circuit (MDB) - 7.50 mm (.300 In.) Body [SOIC]
Atmel Legacy Global Package Code SRJ

Note:	For the most current package drawings, please see the Microchip Packaging Specification located at http://www.microchip.com/packaging

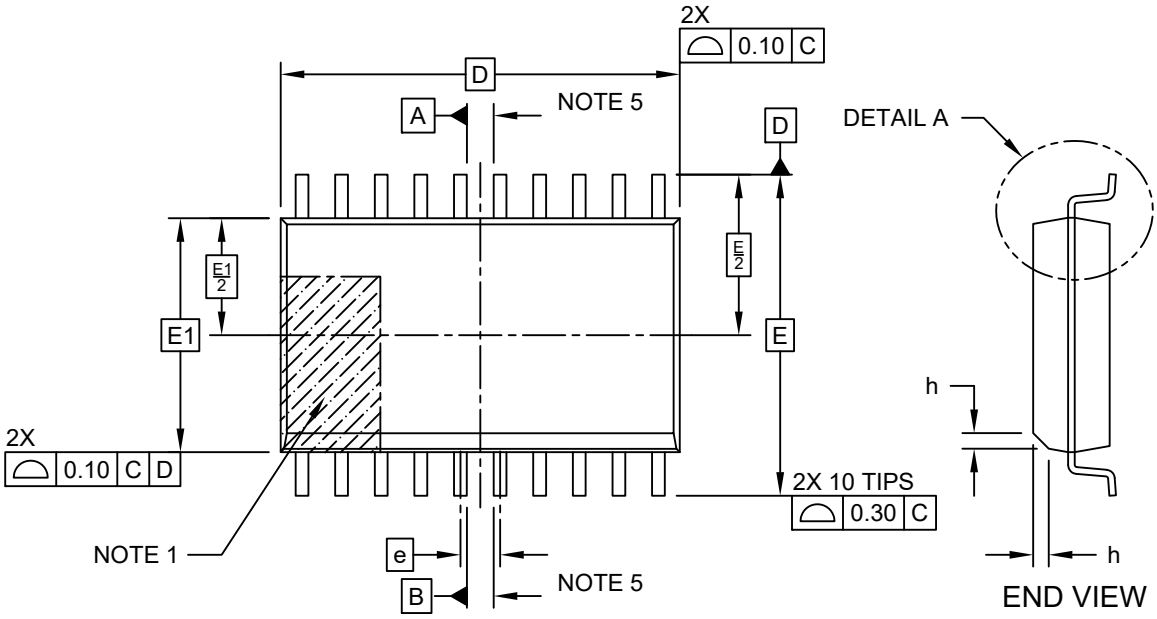

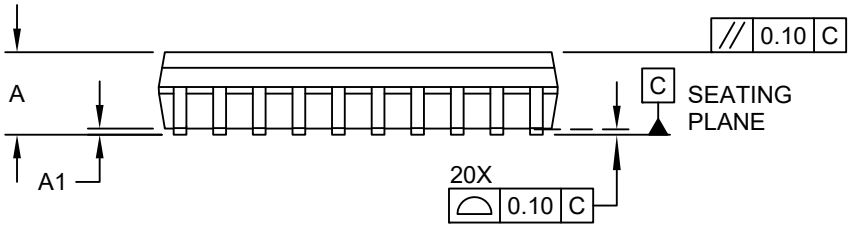

Microchip Technology Drawing C04-21323-MDB Rev A Sheet 1 of 2

20-Lead Small Outline Integrated Circuit (MDB) - 7.50 mm (.300 In.) Body [SOIC]
Atmel Legacy Global Package Code SRJ

Note: For the most current package drawings, please see the Microchip Packaging Specification located at http://www.microchip.com/packaging

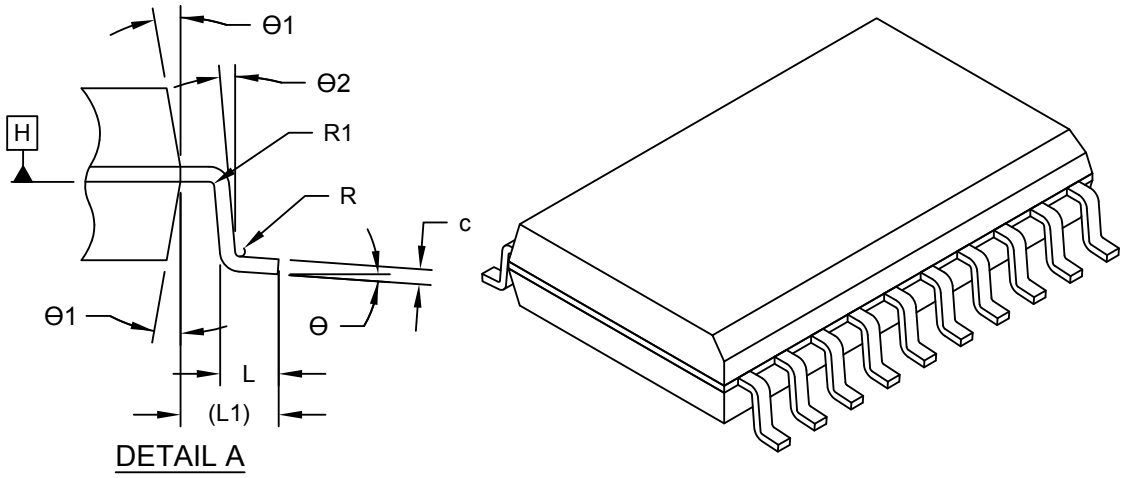

Units		MILLIMETERS		
Dimension Limits		MIN	NOM	MAX
Number of Pins	N		20	
Pitch	e		1.27 BSC	
Overall Height	A	2.35	2.50	2.65
Standoff	A1	0.10	-	0.30
Overall Width	E		10.30 BSC	
Molded Package Width	E1		7.50 BSC	
Overall Length	D		12.80 BSC	
Chamfer (Optional)	h	0.25	-	0.75
Foot Length	L	0.40	-	1.27
Footprint	L1		1.40 REF	
Lead Angle	Θ2	0°	-	-
Foot Angle	Θ	0°	-	8°
Lead Thickness	c	0.20	-	0.33
Lead Width	b	0.31	-	0.51
Mold Draft Angle	Θ1	5°	-	15°

Notes:

1. Pin 1 visual index feature may vary, but must be located within the hatched area.
2. § Significant Characteristic
3. Dimension D does not include mold flash, protrusions or gate burrs, which shall not exceed 0.15 mm per end. Dimension E1 does not include interlead flash or protrusion, which shall not exceed 0.25 mm per side.
4. Dimensioning and tolerancing per ASME Y14.5M

   BSC: Basic Dimension. Theoretically exact value shown without tolerances.

   REF: Reference Dimension, usually without tolerance, for information purposes only.
5. Datums A & B to be determined at Datum H.

Microchip Technology Drawing C04-21323-MDB Rev A Sheet 1 of 2

20-Lead Small Outline Integrated Circuit (MDB) - 7.50 mm (.300 In.) Body [SOIC]
Atmel Legacy Global Package Code SRJ

Note: For the most current package drawings, please see the Microchip Packaging Specification located at http://www.microchip.com/packaging

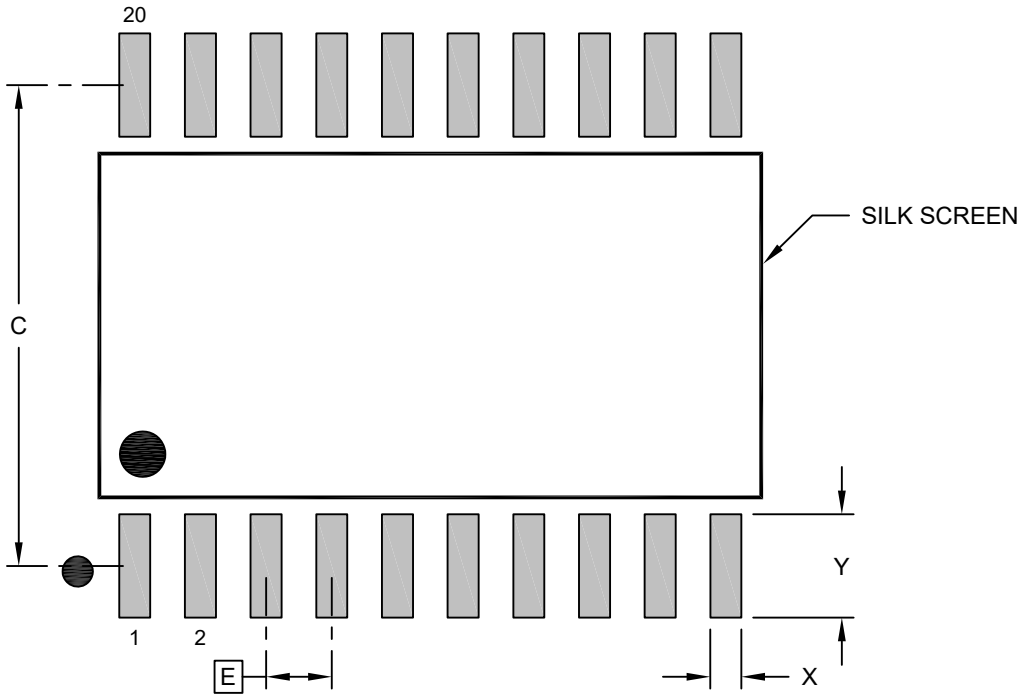

RECOMMENDED LAND PATTERN

Units		MILLIMETERS		
Dimension Limits		MIN	NOM	MAX
Contact Pitch	E		1.27	
Contact Pad Spacing	C		9.30	
Contact Pad Width (Xnn)	X			0.60
Contact Pad Length (Xnn)	Y			2.00

Notes:

1. Dimensioning and tolerancing per ASME Y14.5M
   BSC: Basic Dimension. Theoretically exact value shown without tolerances.
2. For best soldering results, thermal vias, if used, should be filled or tented to avoid solder loss during reflow process

Microchip Technology Drawing C04-23323-MDB Rev A

Table 37-2. Device and Package Maximum Weight

Maximum Weight	542 mg

Table 37-3. Package Characteristics

Moisture Sensitivity Level	MSL3

Table 37-4. Package Reference

JEDEC Drawing Reference	N/A
JESD97 Classification	E3

Table 37-5. Package Code

G5X

37.1.3 20-Pin VQFN

20-Lead Very Thin Plastic Quad Flat, No Lead Package (REB) - 3x3 mm Body [VQFN] With 1.7 mm Exposed Pad; Atmel Legacy Global Package Code ZCL

Note:	For the most current package drawings, please see the Microchip Packaging Specification located at http://www.microchip.com/packaging

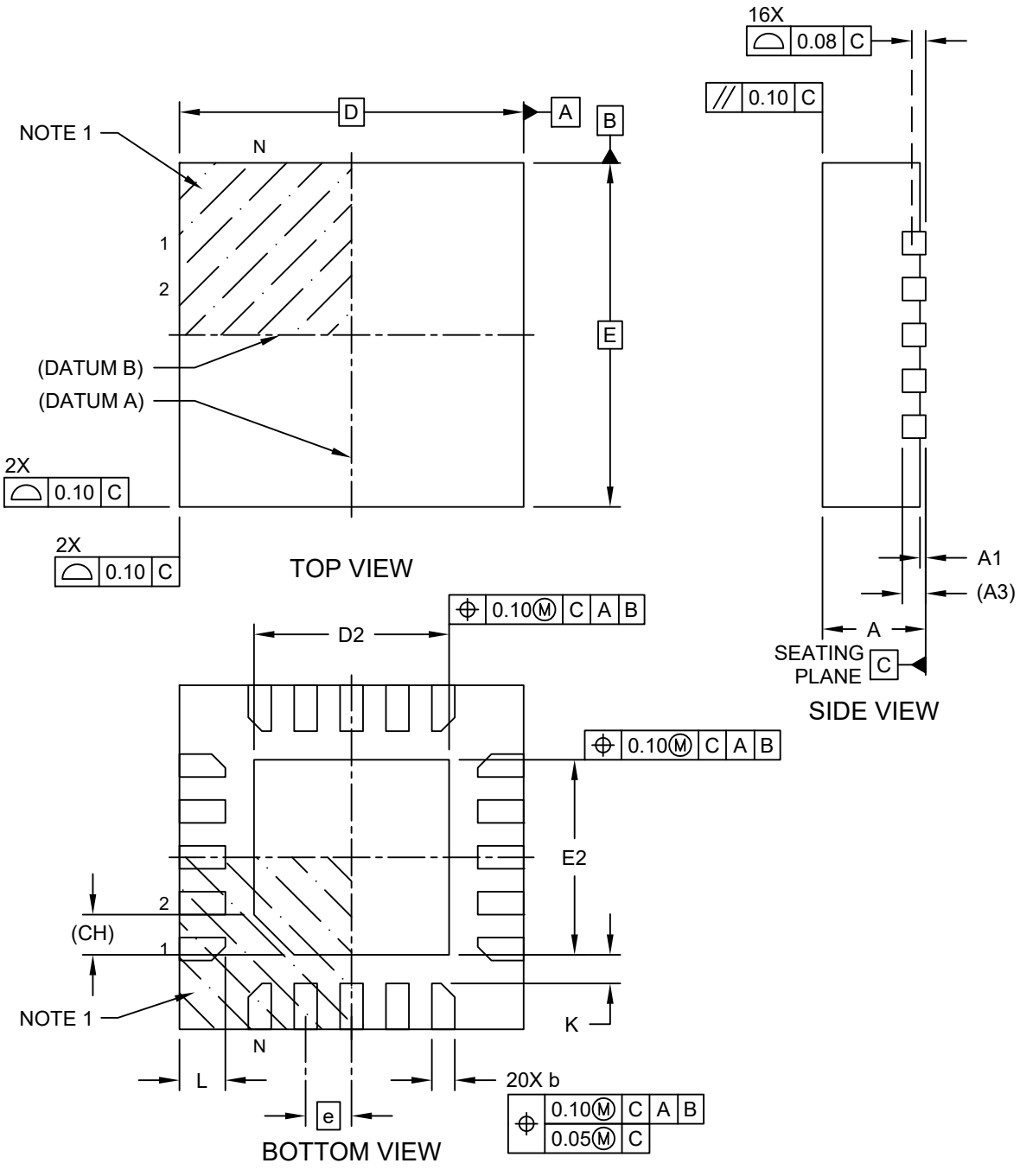

Microchip Technology Drawing C04-21380 Rev A Sheet 1 of 2

20-Lead Very Thin Plastic Quad Flat, No Lead Package (REB) - 3x3 mm Body [VQFN] With 1.7 mm Exposed Pad; Atmel Legacy Global Package Code ZCL

Note: For the most current package drawings, please see the Microchip Packaging Specification located at http://www.microchip.com/packaging

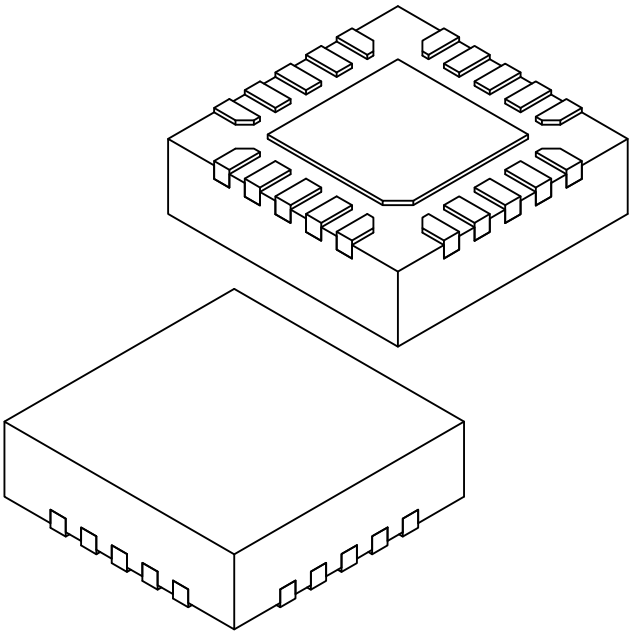

Units		MILLIMETERS		
Dimension Limits		MIN	NOM	MAX
Number of Terminals	N		20	
Pitch	e		0.40 BSC	
Overall Height	A	0.80	0.85	0.90
Standoff	A1	0.00	0.035	0.05
Terminal Thickness	A3		0.203 REF	
Overall Length	D		3.00 BSC	
Exposed Pad Length	D2	1.60	1.70	1.80
Overall Width	E		3.00 BSC	
Exposed Pad Width	E2	1.60	1.70	1.80
Terminal Width	b	0.15	0.20	0.25
Terminal Length	L	0.35	0.40	0.45
Terminal-to-Exposed-Pad	K	0.20	-	-
Pin 1 Index Chamfer	CH		0.35 REF	

Notes:

1. Pin 1 visual index feature may vary, but must be located within the hatched area.
2. Package is saw singulated
3. Dimensioning and tolerancing per ASME Y14.5M
   BSC: Basic Dimension. Theoretically exact value shown without tolerances.
   REF: Reference Dimension, usually without tolerance, for information purposes only.

Microchip Technology Drawing C04-21380 Rev A Sheet 2 of 2

20-Lead Very Thin Plastic Quad Flat, No Lead Package (REB) - 3x3 mm Body [VQFN] With 1.7 mm Exposed Pad; Atmel Legacy Global Package Code ZCL

Note: For the most current package drawings, please see the Microchip Packaging Specification located at http://www.microchip.com/packaging

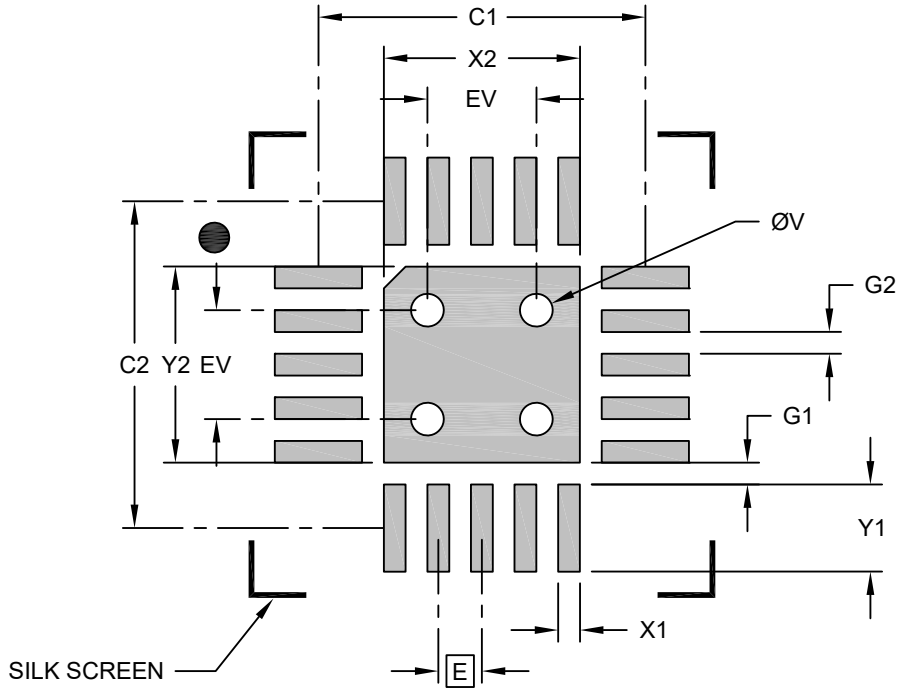

RECOMMENDED LAND PATTERN

Units		MILLIMETERS		
Dimension Limits		MIN	NOM	MAX
Contact Pitch	E		0.40 BSC	
Optional Center Pad Width	X2			1.80
Optional Center Pad Length	Y2			1.80
Contact Pad Spacing	C1		3.00	
Contact Pad Spacing	C2		3.00	
Contact Pad Width (X20)	X1			0.20
Contact Pad Length (X20)	Y1			0.80
Contact Pad to Center Pad (X20)	G1	0.20		
Contact Pad to Contact Pad (X16)	G2	0.20		
Thermal Via Diameter	V		0.30	
Thermal Via Pitch	EV		1.00	

Notes:

1. Dimensioning and tolerancing per ASME Y14.5M
   BSC: Basic Dimension. Theoretically exact value shown without tolerances.
2. For best soldering results, thermal vias, if used, should be filled or tented to avoid solder loss during reflow process

Microchip Technology Drawing C04-23380 Rev A

Table 37-6. Device and Package Maximum Weight

Maximum Weight	19.1 mg

Table 37-7. Package Characteristics

Moisture Sensitivity Level	MSL3

Table 37-8. Package Reference

JEDEC Drawing Reference	N/A
JESD97 Classification	E3

Table 37-9. Package Code

REB

37.2 Thermal Considerations

37.2.1 Thermal Resistance Data

The following table summarizes the thermal resistance data depending on the package.

Table 37-10. Thermal Resistance Data

Package Type	θ_{JA} [°C/W]	θ_{JC} [°C/W]
20-pin SOIC300 (SRJ)	44	21
20-pin VQFN (ZCL)	79.7	36

Related Links

37.2.2 Junction Temperature

37.2.2 Junction Temperature

The average chip-junction temperature, T_J, in °C can be obtained from the following:

1. $T_J = T_A + (P_D \times \theta_{JA})$
2. $T_J = T_A + (P_D \times (\theta_{HEATSINK} + \theta_{JC}))$

where:

- θ_{JA} = Package thermal resistance, Junction-to-ambient (°C/W), see Thermal Resistance Data
- θ_{JC} = Package thermal resistance, Junction-to-case thermal resistance (°C/W), see Thermal Resistance Data
- $\theta_{HEATSINK}$ = Thermal resistance (°C/W) specification of the external cooling device
- P_D = Device power consumption (W)
- T_A = Ambient temperature (°C)

From the first equation, the user can derive the estimated lifetime of the chip and decide if a cooling device is necessary or not. If a cooling device is to be fitted on the chip, the second equation should be used to compute the resulting average chip-junction temperature T_J in °C.

Related Links

37.2.1 Thermal Resistance Data

38. Instruction Set Summary

Table 38-1. Arithmetic and Logic Instructions

Mnemonic	Operands	Description		Op		Flags	#Clocks
ADD	Rd, Rr	Add without Carry	Rd	←	Rd + Rr	Z,C,N,V,S,H	1
ADC	Rd, Rr	Add with Carry	Rd	←	Rd + Rr + C	Z,C,N,V,S,H	1
ADIW	Rd, K	Add Immediate to Word	Rd	←	Rd + 1:Rd + K	Z,C,N,V,S	2
SUB	Rd, Rr	Subtract without Carry	Rd	←	Rd - Rr	Z,C,N,V,S,H	1
SUBI	Rd, K	Subtract Immediate	Rd	←	Rd - K	Z,C,N,V,S,H	1
SBC	Rd, Rr	Subtract with Carry	Rd	←	Rd - Rr - C	Z,C,N,V,S,H	1
SBCI	Rd, K	Subtract Immediate with Carry	Rd	←	Rd - K - C	Z,C,N,V,S,H	1
SBIW	Rd, K	Subtract Immediate from Word	Rd + 1:Rd	←	Rd + 1:Rd - K	Z,C,N,V,S	2
AND	Rd, Rr	Logical AND	Rd	←	Rd • Rr	Z,N,V,S	1
ANDI	Rd, K	Logical AND with Immediate	Rd	←	Rd • K	Z,N,V,S	1
OR	Rd, Rr	Logical OR	Rd	←	Rd v Rr	Z,N,V,S	1
ORI	Rd, K	Logical OR with Immediate	Rd	←	Rd v K	Z,N,V,S	1
EOR	Rd, Rr	Exclusive OR	Rd	←	Rd ⊕ Rr	Z,N,V,S	1
COM	Rd	One’s Complement	Rd	←	$FF - Rd	Z,C,N,V,S	1
NEG	Rd	Two’s Complement	Rd	←	$00 - Rd	Z,C,N,V,S,H	1
SBR	Rd,K	Set Bit(s) in Register	Rd	←	Rd v K	Z,N,V,S	1
CBR	Rd,K	Clear Bit(s) in Register	Rd	←	Rd • ($FFh - K)	Z,N,V,S	1
INC	Rd	Increment	Rd	←	Rd + 1	Z,N,V,S	1
DEC	Rd	Decrement	Rd	←	Rd - 1	Z,N,V,S	1
TST	Rd	Test for Zero or Minus	Rd	←	Rd • Rd	Z,N,V,S	1
CLR	Rd	Clear Register	Rd	←	Rd ⊕ Rd	Z,N,V,S	1
SER	Rd	Set Register	Rd	←	$FF	None	1
MUL	Rd,Rr	Multiply Unsigned	R1:R0	←	Rd x Rr (UU)	Z,C	2
MULS	Rd,Rr	Multiply Signed	R1:R0	←	Rd x Rr (SS)	Z,C	2
MULSU	Rd,Rr	Multiply Signed with Unsigned	R1:R0	←	Rd x Rr (SU)	Z,C	2
FMUL	Rd,Rr	Fractional Multiply Unsigned	R1:R0	←	Rd x Rr<<1 (UU)	Z,C	2
FMULS	Rd,Rr	Fractional Multiply Signed	R1:R0	←	Rd x Rr<<1 (SS)	Z,C	2
FMULSU	Rd,Rr	Fractional Multiply Signed with Unsigned	R1:R0	←	Rd x Rr<<1 (SU)	Z,C	2

Table 38-2. Branch Instructions

Mnemonic	Operands	Description		Op		Flags	#Clocks
RJMP	k	Relative Jump	PC	←	PC + k + 1	None	2

.....continued

Mnemonic	Operands	Description		Op		Flags	#Clocks
IJMP		Indirect Jump to (Z)	PC(15:0) PC(21:16)	← ←	Z 0	None	2
JMP	k	Jump	PC	←	k	None	3
RCALL	k	Relative Call Subroutine	PC	←	PC + k + 1	None	2 / 3
ICALL		Indirect Call to (Z)	PC(15:0) PC(21:16)	← ←	Z 0	None	2 / 3
CALL	k	Call Subroutine	PC	←	k	None	3 / 4
RET		Subroutine Return	PC	←	STACK	None	4 / 5
RETI		Interrupt Return	PC	←	STACK	I	4 / 5
CPSE	Rd,Rr	Compare, skip if Equal	if (Rd = Rr) PC	←	PC + 2 or 3	None	1 / 2 / 3
CP	Rd,Rr	Compare	Rd - Rr			Z,C,N,V,S,H	1
CPC	Rd,Rr	Compare with Carry	Rd - Rr - C			Z,C,N,V,S,H	1
CPI	Rd,K	Compare with Immediate	Rd - K			Z,C,N,V,S,H	1
SBRC	Rr, b	Skip if Bit in Register Cleared	if (Rr(b) = 0) PC	←	PC + 2 or 3	None	1 / 2 / 3
SBRS	Rr, b	Skip if Bit in Register Set	if (Rr(b) = 1) PC	←	PC + 2 or 3	None	1 / 2 / 3
SBIC	A, b	Skip if Bit in I/O Register Cleared	if (I/O(A,b) = 0) PC	←	PC + 2 or 3	None	1 / 2 / 3
SBIS	A, b	Skip if Bit in I/O Register Set	If (I/O(A,b) =1) PC	←	PC + 2 or 3	None	1 / 2 / 3
BRBS	s, k	Branch if Status Flag Set	if (SREG(s) = 1) then PC	←	PC + k + 1	None	1 / 2
BRBC	s, k	Branch if Status Flag Cleared	if (SREG(s) = 0) then PC	←	PC + k + 1	None	1 / 2
BREQ	k	Branch if Equal	if (Z = 1) then PC	←	PC + k + 1	None	1 / 2
BRNE	k	Branch if Not Equal	if (Z = 0) then PC	←	PC + k + 1	None	1 / 2
BRCS	k	Branch if Carry Set	if (C = 1) then PC	←	PC + k + 1	None	1 / 2
BRCC	k	Branch if Carry Cleared	if (C = 0) then PC	←	PC + k + 1	None	1 / 2
BRSH	k	Branch if Same or Higher	if (C = 0) then PC	←	PC + k + 1	None	1 / 2
BRLO	k	Branch if Lower	if (C = 1) then PC	←	PC + k + 1	None	1 / 2
BRMI	k	Branch if Minus	if (N = 1) then PC	←	PC + k + 1	None	1 / 2
BRPL	k	Branch if Plus	if (N = 0) then PC	←	PC + k + 1	None	1 / 2
BRGE	k	Branch if Greater or Equal, Signed	if (N ⊕ V= 0) then PC	←	PC + k + 1	None	1 / 2
BRLT	k	Branch if Less Than, Signed	if (N ⊕ V= 1) then PC	←	PC + k + 1	None	1 / 2
BRHS	k	Branch if Half Carry Flag Set	if (H = 1) then PC	←	PC + k + 1	None	1 / 2
BRHC	k	Branch if Half Carry Flag Cleared	if (H = 0) then PC	←	PC + k + 1	None	1 / 2
BRTS	k	Branch if T Flag Set	if (T = 1) then PC	←	PC + k + 1	None	1 / 2

.....continued

Mnemonic	Operands	Description		Op		Flags	#Clocks
BRTC	k	Branch if T Flag Cleared	if (T = 0) then PC	←	PC + k + 1	None	1 / 2
BRVS	k	Branch if Overflow Flag is Set	if (V = 1) then PC	←	PC + k + 1	None	1 / 2
BRVC	k	Branch if Overflow Flag is Cleared	if (V = 0) then PC	←	PC + k + 1	None	1 / 2
BRIE	k	Branch if Interrupt Enabled	if (I = 1) then PC	←	PC + k + 1	None	1 / 2
BRID	k	Branch if Interrupt Disabled	if (I = 0) then PC	←	PC + k + 1	None	1 / 2

Table 38-3. Data Transfer Instructions

Mnemonic	Operands	Description		Op		Flags	#Clocks
MOV	Rd, Rr	Copy Register	Rd	←	Rr	None	1
MOVW	Rd, Rr	Copy Register Pair	Rd+1:Rd	←	Rr+1:Rr	None	1
LDI	Rd, K	Load Immediate	Rd	←	K	None	1
LDS	Rd, k	Load Direct from data space	Rd	←	(k)	None	3(1)
LD	Rd, X	Load Indirect	Rd	←	(X)	None	2(1)
LD	Rd, X+	Load Indirect and Post-Increment	Rd X	← ←	(X) X + 1	None	2(1)
LD	Rd, -X	Load Indirect and Pre-Decrement	X Rd	← ←	X - 1 (X)	None	2(1)
LD	Rd, Y	Load Indirect	Rd	←	(Y)	None	2(1)
LD	Rd, Y+	Load Indirect and Post-Increment	Rd Y	← ←	(Y) Y + 1	None	2(1)
LD	Rd, -Y	Load Indirect and Pre-Decrement	Y Rd	← ←	Y - 1 (Y)	None	2(1)
LDD	Rd, Y+q	Load Indirect with Displacement	Rd	←	(Y + q)	None	2(1)
LD	Rd, Z	Load Indirect	Rd	←	(Z)	None	2(1)
LD	Rd, Z+	Load Indirect and Post-Increment	Rd Z	← ←	(Z) Z+1	None	2(1)
LD	Rd, -Z	Load Indirect and Pre-Decrement	Z Rd	← ←	Z - 1 (Z)	None	2(1)
LDD	Rd, Z+q	Load Indirect with Displacement	Rd	←	(Z + q)	None	2(1)
STS	k, Rr	Store Direct to Data Space	(k)	←	Rd	None	2(1)
ST	X, Rr	Store Indirect	(X)	←	Rr	None	1(1)
ST	X+, Rr	Store Indirect and Post-Increment	(X) X	← ←	Rr X + 1	None	1(1)
ST	-X, Rr	Store Indirect and Pre-Decrement	X (X)	← ←	X - 1 Rr	None	1(1)
ST	Y, Rr	Store Indirect	(Y)	←	Rr	None	1(1)

.....continued

Mnemonic	Operands	Description		Op		Flags	#Clocks
ST	Y+, Rr	Store Indirect and Post-Increment	(Y) Y	← ←	Rr Y + 1	None	1(1)
ST	-Y, Rr	Store Indirect and Pre-Decrement	Y (Y)	← ←	Y - 1 Rr	None	1(1)
STD	Y+q, Rr	Store Indirect with Displacement	(Y + q)	←	Rr	None	1(1)
ST	Z, Rr	Store Indirect	(Z)	←	Rr	None	1(1)
ST	Z+, Rr	Store Indirect and Post-Increment	(Z) Z	← ←	Rr Z + 1	None	1(1)
ST	-Z, Rr	Store Indirect and Pre-Decrement	Z	←	Z - 1	None	1(1)
STD	Z+q,Rr	Store Indirect with Displacement	(Z + q)	←	Rr	None	1(1)
LPM		Load Program Memory	R0	←	(Z)	None	3
LPM	Rd, Z	Load Program Memory	Rd	←	(Z)	None	3
LPM	Rd, Z+	Load Program Memory and Post-Increment	Rd Z	← ←	(Z) Z + 1	None	3
IN	Rd, A	In From I/O Location	Rd	←	I/O(A)	None	1
OUT	A, Rr	Out To I/O Location	I/O(A)	←	Rr	None	1
PUSH	Rr	Push Register on Stack	STACK	←	Rr	None	1
POP	Rd	Pop Register from Stack	Rd	←	STACK	None	2

Table 38-4. Bit and Bit-Test Instructions

Mnemonic	Operands	Description		Op		Flags	#Clocks
LSL	Rd	Logical Shift Left	Rd(n+1) Rd(0) C	← ← ←	Rd(n) 0 Rd(7)	Z,C,N,V,H	1
LSR	Rd	Logical Shift Right	Rd(n) Rd(7) C	← ← ←	Rd(n+1) 0 Rd(0)	Z,C,N,V	1
ROL	Rd	Rotate Left Through Carry	Rd(0) Rd(n+1) C	← ← ←	C Rd(n) Rd(7)	Z,C,N,V,H	1
ROR	Rd	Rotate Right Through Carry	Rd(7) Rd(n) C	← ← ←	C Rd(n+1) Rd(0)	Z,C,N,V	1
ASR	Rd	Arithmetic Shift Right	Rd(n)	←	Rd(n+1), n=0..6	Z,C,N,V	1
SWAP	Rd	Swap Nibbles	Rd(3..0)	↔	Rd(7..4)	None	1
SBI	A, b	Set Bit in I/O Register	I/O(A, b)	←	1	None	1
CBI	A, b	Clear Bit in I/O Register	I/O(A, b)	←	0	None	1

.....continued

Mnemonic	Operands	Description		Op		Flags	#Clocks
BST	Rr, b	Bit Store from Register to T	T	←	Rr(b)	T	1
BLD	Rd, b	Bit load from T to Register	Rd(b)	←	T	None	1
BSET	s	Flag Set	SREG(s)	←	1	SREG(s)	1
BCLR	s	Flag Clear	SREG(s)	←	0	SREG(s)	1
SEC		Set Carry	C	←	1	C	1
CLC		Clear Carry	C	←	0	C	1
SEN		Set Negative Flag	N	←	1	N	1
CLN		Clear Negative Flag	N	←	0	N	1
SEZ		Set Zero Flag	Z	←	1	Z	1
CLZ		Clear Zero Flag	Z	←	0	Z	1
SEI		Global Interrupt Enable	I	←	1	I	1
CLI		Global Interrupt Disable	I	←	0	I	1
SES		Set Signed Test Flag	S	←	1	S	1
CLS		Clear Signed Test Flag	S	←	0	S	1
SEV		Set Two's Complement Overflow	V	←	1	V	1
CLV		Clear Two's Complement Overflow	V	←	0	V	1
SET		Set T in SREG	T	←	1	T	1
CLT		Clear T in SREG	T	←	0	T	1
SEH		Set Half Carry Flag in SREG	H	←	1	H	1
CLH		Clear Half Carry Flag in SREG	H	←	0	H	1

Table 38-5. MCU Control Instructions

Mnemonic	Operands	Description	Operation	Flags	#Clocks
BREAK		Break	(See also in Debug interface description)	None	1
NOP		No Operation		None	1
SLEEP		Sleep	(see also power management and sleep description)	None	1
WDR		Watchdog Reset	(see also Watchdog Controller description)	None	1

Note:

1. Cycle time for data memory accesses assume internal RAM access, and are not valid for accesses through the NVM controller. A minimum of one extra cycle must be added when accessing memory through the NVM controller (such as Flash and EEPROM), but depending on simultaneous accesses by other masters or the NVM controller state, there may be more than one extra cycle.

39. Conventions

39.1 Numerical Notation

Table 39-1. Numerical Notation

Symbol	Description
165	Decimal number
0b0101	Binary number (example 0b0101 = 5 decimal)
'0101'	Binary numbers are given without prefix if unambiguous.
0x3B24	Hexadecimal number
X	Represents an unknown or don't care value
Z	Represents a high-impedance (floating) state for either a signal or a bus

39.2 Memory Size and Type

Table 39-2. Memory Size and Bit Rate

Symbol	Description
KB (kbyte)	kilobyte (2^{10} = 1024)
MB (Mbyte)	megabyte (2^{20} = 1024*1024)
GB (Gbyte)	gigabyte (2^{30} = 1024*1024*1024)
b	bit (binary '0' or '1')
B	byte (8 bits)
1kbit/s	1,000 bit/s rate (not 1,024 bit/s)
1Mbit/s	1,000,000 bit/s rate
1Gbit/s	1,000,000,000 bit/s rate
word	16 bit

39.3 Frequency and Time

Symbol	Description
kHz	1kHz = 10^3Hz = 1,000Hz
KHz	1KHz = 1,024Hz, 32KHz = 32,768Hz
MHz	10^6 = 1,000,000Hz
GHz	10^9 = 1,000,000,000Hz
s	second
ms	millisecond
µs	microsecond

.....continued	
Symbol	**Description**
ns	nanosecond

39.4 Registers and Bits

Table 39-3. Register and Bit Mnemonics

Symbol	Description
R/W	Read/Write accessible register bit. The user can read from and write to this bit.
R	Read-only accessible register bit. The user can only read this bit. Writes will be ignored.
W	Write-only accessible register bit. The user can only write this bit. Reading this bit will return an undefined value.
BIT	Bit names are shown in uppercase. (Example ENABLE)
FIELD[n:m]	A set of bits from bit n down to m. (Example: PINA[3:0] = {PINA3, PINA2, PINA1, PINA0}
Reserved	Reserved bits are unused and reserved for future use. For compatibility with future devices, always write reserved bits to zero when the register is written. Reserved bits will always return zero when read. Reserved bit field values must not be written to a bit field. A reserved value won't be read from a read-only bit field.
PERIPHERAL*i*	If several instances of a peripheral exist, the peripheral name is followed by a number to indicate the number of the instance in the range 0-n. PERIPHERAL0 denotes one specific instance.
Reset	Value of a register after a power Reset. This is also the value of registers in a peripheral after performing a software Reset of the peripheral, except for the Debug Control registers.
SET/CLR	Registers with SET/CLR suffix allows the user to clear and set bits in a register without doing a read-modify-write operation. These registers always come in pairs. Writing a one to a bit in the CLR register will clear the corresponding bit in both registers, while writing a one to a bit in the SET register will set the corresponding bit in both registers. Both registers will return the same value when read. If both registers are written simultaneously, the write to the CLR register will take precedence.

40. Acronyms and Abbreviations

The below table contains acronyms and abbreviations used in this document.

Table 40-1. Acronyms and Abbreviations

Abbreviation	Description
AC	Analog Comparator
ACK	Acknowledge
ADC	Analog-to-Digital Converter
ADDR	Address
AES	Advanced Encryption Standard
ALU	Arithmetic Logic Unit
AREF	Analog reference voltage, also VREFA
BLB	Boot Lock Bit
BOD	Brown-out detector
CAL	Calibration
CCMP	Compare/Capture
CCL	Configurable Custom Logic
CCP	Configuration Change Protection
CLK	Clock
CLKCTRL	Clock Controller
CRC	Cyclic Redundancy Check
CTRL	Control
DAC	Digital-to-Analog Converter
DFLL	Digital Frequency Locked Loop
EEPROM	Electrically Erasable Programmable Read-Only Memory
EVSYS	Event System
GND	Ground
GPIO	General Purpose Input/Output
I^2C	Inter-Integrated Circuit
IF	Interrupt flag
INT	Interrupt
IrDA	Infrared Data Association
IVEC	Interrupt Vector
LUT	Look-Up Table
MBIST	Memory built-in self-test
NACK	Not Acknowlege
NMI	Non-maskable interrupt

.....continued

Abbreviation	Description
NVM	Non-Volatile Memory
NVMCTRL	Non-Volatile Memory Controller
OSC	Oscillator
PC	Program Counter
PER	Period
POR	Power-on reset
PORT	I/O Pin Configuration
PTC	Peripheral Touch Controller
PWM	Pulse Width Modulation
RAM	Random-Access Memory
REF	Reference
REQ	Request
RISC	Reduced Instruction Set Computer
RSTCTRL	Reset Controller
RTC	Real-Time Counter
RX	Receiver/Receive
SERCOM	Serial Communication Interface
SLPCTRL	Sleep Controller
SMBus™	System Management Bus
SP	Stack Pointer
SPI	Serial Peripheral Interface
SRAM	Static Random-Access Memory
SYSCFG	System Configuration
TC	Timer/Counter (Optionally superseded by a letter indicating type of TC)
TRNG	True Random Number Generator
TWI	Two Wire Interface
TX	Transmitter/Transmit
ULP	Ultra-low power
UPDI	Unified Program and Debug Interface
USART	Universal Synchronous and Asynchronous Serial Receiver and Transmitter
V_{DD}	Voltage to be applied to VDD
VREF	Voltage reference
WDT	Watchdog Timer
XOSC	Crystal Oscillator

41. Errata

41.1 Errata - ATtiny416/816

Errata can be found in the ATtiny416/816 Silicon Errata and Data Sheet Clarification Document.

42. Datasheet Revision History

Note: The datasheet revision is independent of the die revision and the device variant (last letter of the ordering number).

42.1 Rev. C - 10/2019

Section	Changes
Document	• Reverted data sheet status from complete to preliminary
Electrical Characteristics	• Removed max./min. characteristics for AC Hysteresis • ADC Characteristics: – Added duty cycle note for clock frequencies above 1500 kHz • PTC Characteristics - Operating Ratings: – Removed V_{DD} and CLK_{PER} characteristics – Added CLK_{ADC} characteristics

42.2 Rev. B - 07/2019

Section	Changes
Document	• Editorial updates.
Device	• Introduction: – Added a note for automotive data sheets – Changed text to align with all tinyAVR® 0- and 1-series data sheets • Retention endurance numbers added • Data Sheet Clarification Document chapter added • Ordering Information moved • I/O Multiplexing and Considerations updated
Configuration and User Fuses	• RSTPINCFG: Time-out after a system reset when fused to be GPIO explained
BOD - Brown-out Detector	• Removed levels not characterized by minimum and maximum values • Added a note for typical values and reference to electrical characteristics
TCA	• Added a note for alternative WOn pins
USART	• Clarified One-Wire mode • Clarified text about Disabling the Transmitter • Reverted 32±6 to 16±3 baud samples in RXMODE bits in CTRLB
SPI	• Clarified functionality for SPI SS pin

.....continued

Section	Changes
CRCSCAN	• Removed unsupported BACKGROUND and CONTINUOUS scan functionality
ADC - Analog-to-Digital Converter	• Added missing calibration register
UPDI	• Added a warning for ESD protection • GPIO functionality disabled for a period after a system reset, changed from ms to clock cycles
Electrical Characteristics	• Added a note for Chip Erase in General Operating Ratings • Added Electrical Characteristics for PTC • Corrected the description for some symbols in the I/O Pin Characteristics table
Errata	• Errata moved to ATtiny416/816 Silicon Errata and Data Sheet Clarification Document
Ordering Information	• Updated with product page links and ordering codes
Product Identification System	• Updated with Tube and Tray packing media
Package Drawings	• Updated package drawings to Microchip standard

42.3 Rev. A - 01/2017

Initial release.

The Microchip Website

Microchip provides online support via our website at http://www.microchip.com/. This website is used to make files and information easily available to customers. Some of the content available includes:

- **Product Support** – Data sheets and errata, application notes and sample programs, design resources, user's guides and hardware support documents, latest software releases and archived software
- **General Technical Support** – Frequently Asked Questions (FAQs), technical support requests, online discussion groups, Microchip design partner program member listing
- **Business of Microchip** – Product selector and ordering guides, latest Microchip press releases, listing of seminars and events, listings of Microchip sales offices, distributors and factory representatives

Product Change Notification Service

Microchip's product change notification service helps keep customers current on Microchip products. Subscribers will receive email notification whenever there are changes, updates, revisions or errata related to a specified product family or development tool of interest.

To register, go to http://www.microchip.com/pcn and follow the registration instructions.

Customer Support

Users of Microchip products can receive assistance through several channels:

- Distributor or Representative
- Local Sales Office
- Embedded Solutions Engineer (ESE)
- Technical Support

Customers should contact their distributor, representative or ESE for support. Local sales offices are also available to help customers. A listing of sales offices and locations is included in this document.

Technical support is available through the website at: http://www.microchip.com/support

Microchip Devices Code Protection Feature

Note the following details of the code protection feature on Microchip devices:

- Microchip products meet the specification contained in their particular Microchip Data Sheet.
- Microchip believes that its family of products is one of the most secure families of its kind on the market today, when used in the intended manner and under normal conditions.
- There are dishonest and possibly illegal methods used to breach the code protection feature. All of these methods, to our knowledge, require using the Microchip products in a manner outside the operating specifications contained in Microchip's Data Sheets. Most likely, the person doing so is engaged in theft of intellectual property.
- Microchip is willing to work with the customer who is concerned about the integrity of their code.
- Neither Microchip nor any other semiconductor manufacturer can guarantee the security of their code. Code protection does not mean that we are guaranteeing the product as "unbreakable."

Code protection is constantly evolving. We at Microchip are committed to continuously improving the code protection features of our products. Attempts to break Microchip's code protection feature may be a violation of the Digital Millennium Copyright Act. If such acts allow unauthorized access to your software or other copyrighted work, you may have a right to sue for relief under that Act.

Legal Notice

Information contained in this publication regarding device applications and the like is provided only for your convenience and may be superseded by updates. It is your responsibility to ensure that your application meets with

your specifications. MICROCHIP MAKES NO REPRESENTATIONS OR WARRANTIES OF ANY KIND WHETHER EXPRESS OR IMPLIED, WRITTEN OR ORAL, STATUTORY OR OTHERWISE, RELATED TO THE INFORMATION, INCLUDING BUT NOT LIMITED TO ITS CONDITION, QUALITY, PERFORMANCE, MERCHANTABILITY OR FITNESS FOR PURPOSE. Microchip disclaims all liability arising from this information and its use. Use of Microchip devices in life support and/or safety applications is entirely at the buyer's risk, and the buyer agrees to defend, indemnify and hold harmless Microchip from any and all damages, claims, suits, or expenses resulting from such use. No licenses are conveyed, implicitly or otherwise, under any Microchip intellectual property rights unless otherwise stated.

Trademarks

The Microchip name and logo, the Microchip logo, Adaptec, AnyRate, AVR, AVR logo, AVR Freaks, BesTime, BitCloud, chipKIT, chipKIT logo, CryptoMemory, CryptoRF, dsPIC, FlashFlex, flexPWR, HELDO, IGLOO, JukeBlox, KeeLoq, Kleer, LANCheck, LinkMD, maXStylus, maXTouch, MediaLB, megaAVR, Microsemi, Microsemi logo, MOST, MOST logo, MPLAB, OptoLyzer, PackeTime, PIC, picoPower, PICSTART, PIC32 logo, PolarFire, Prochip Designer, QTouch, SAM-BA, SenGenuity, SpyNIC, SST, SST Logo, SuperFlash, Symmetricom, SyncServer, Tachyon, TempTrackr, TimeSource, tinyAVR, UNI/O, Vectron, and XMEGA are registered trademarks of Microchip Technology Incorporated in the U.S.A. and other countries.

APT, ClockWorks, The Embedded Control Solutions Company, EtherSynch, FlashTec, Hyper Speed Control, HyperLight Load, IntelliMOS, Libero, motorBench, mTouch, Powermite 3, Precision Edge, ProASIC, ProASIC Plus, ProASIC Plus logo, Quiet-Wire, SmartFusion, SyncWorld, Temux, TimeCesium, TimeHub, TimePictra, TimeProvider, Vite, WinPath, and ZL are registered trademarks of Microchip Technology Incorporated in the U.S.A.

Adjacent Key Suppression, AKS, Analog-for-the-Digital Age, Any Capacitor, AnyIn, AnyOut, BlueSky, BodyCom, CodeGuard, CryptoAuthentication, CryptoAutomotive, CryptoCompanion, CryptoController, dsPICDEM, dsPICDEM.net, Dynamic Average Matching, DAM, ECAN, EtherGREEN, In-Circuit Serial Programming, ICSP, INICnet, Inter-Chip Connectivity, JitterBlocker, KleerNet, KleerNet logo, memBrain, Mindi, MiWi, MPASM, MPF, MPLAB Certified logo, MPLIB, MPLINK, MultiTRAK, NetDetach, Omniscient Code Generation, PICDEM, PICDEM.net, PICkit, PICtail, PowerSmart, PureSilicon, QMatrix, REAL ICE, Ripple Blocker, SAM-ICE, Serial Quad I/O, SMART-I.S., SQI, SuperSwitcher, SuperSwitcher II, Total Endurance, TSHARC, USBCheck, VariSense, ViewSpan, WiperLock, Wireless DNA, and ZENA are trademarks of Microchip Technology Incorporated in the U.S.A. and other countries.

SQTP is a service mark of Microchip Technology Incorporated in the U.S.A.

The Adaptec logo, Frequency on Demand, Silicon Storage Technology, and Symmcom are registered trademarks of Microchip Technology Inc. in other countries.

GestIC is a registered trademark of Microchip Technology Germany II GmbH & Co. KG, a subsidiary of Microchip Technology Inc., in other countries.

All other trademarks mentioned herein are property of their respective companies.

© 2019, Microchip Technology Incorporated, Printed in the U.S.A., All Rights Reserved.

ISBN: 978-1-5224-5106-8

Quality Management System

For information regarding Microchip's Quality Management Systems, please visit http://www.microchip.com/quality.

Worldwide Sales and Service

AMERICAS	ASIA/PACIFIC	ASIA/PACIFIC	EUROPE
Corporate Office 2355 West Chandler Blvd. Chandler, AZ 85224-6199 Tel: 480-792-7200 Fax: 480-792-7277 Technical Support: http://www.microchip.com/support Web Address: http://www.microchip.com **Atlanta** Duluth, GA Tel: 678-957-9614 Fax: 678-957-1455 **Austin, TX** Tel: 512-257-3370 **Boston** Westborough, MA Tel: 774-760-0087 Fax: 774-760-0088 **Chicago** Itasca, IL Tel: 630-285-0071 Fax: 630-285-0075 **Dallas** Addison, TX Tel: 972-818-7423 Fax: 972-818-2924 **Detroit** Novi, MI Tel: 248-848-4000 **Houston, TX** Tel: 281-894-5983 **Indianapolis** Noblesville, IN Tel: 317-773-8323 Fax: 317-773-5453 Tel: 317-536-2380 **Los Angeles** Mission Viejo, CA Tel: 949-462-9523 Fax: 949-462-9608 Tel: 951-273-7800 **Raleigh, NC** Tel: 919-844-7510 **New York, NY** Tel: 631-435-6000 **San Jose, CA** Tel: 408-735-9110 Tel: 408-436-4270 **Canada - Toronto** Tel: 905-695-1980 Fax: 905-695-2078	**Australia - Sydney** Tel: 61-2-9868-6733 **China - Beijing** Tel: 86-10-8569-7000 **China - Chengdu** Tel: 86-28-8665-5511 **China - Chongqing** Tel: 86-23-8980-9588 **China - Dongguan** Tel: 86-769-8702-9880 **China - Guangzhou** Tel: 86-20-8755-8029 **China - Hangzhou** Tel: 86-571-8792-8115 **China - Hong Kong SAR** Tel: 852-2943-5100 **China - Nanjing** Tel: 86-25-8473-2460 **China - Qingdao** Tel: 86-532-8502-7355 **China - Shanghai** Tel: 86-21-3326-8000 **China - Shenyang** Tel: 86-24-2334-2829 **China - Shenzhen** Tel: 86-755-8864-2200 **China - Suzhou** Tel: 86-186-6233-1526 **China - Wuhan** Tel: 86-27-5980-5300 **China - Xian** Tel: 86-29-8833-7252 **China - Xiamen** Tel: 86-592-2388138 **China - Zhuhai** Tel: 86-756-3210040	**India - Bangalore** Tel: 91-80-3090-4444 **India - New Delhi** Tel: 91-11-4160-8631 **India - Pune** Tel: 91-20-4121-0141 **Japan - Osaka** Tel: 81-6-6152-7160 **Japan - Tokyo** Tel: 81-3-6880- 3770 **Korea - Daegu** Tel: 82-53-744-4301 **Korea - Seoul** Tel: 82-2-554-7200 **Malaysia - Kuala Lumpur** Tel: 60-3-7651-7906 **Malaysia - Penang** Tel: 60-4-227-8870 **Philippines - Manila** Tel: 63-2-634-9065 **Singapore** Tel: 65-6334-8870 **Taiwan - Hsin Chu** Tel: 886-3-577-8366 **Taiwan - Kaohsiung** Tel: 886-7-213-7830 **Taiwan - Taipei** Tel: 886-2-2508-8600 **Thailand - Bangkok** Tel: 66-2-694-1351 **Vietnam - Ho Chi Minh** Tel: 84-28-5448-2100	**Austria - Wels** Tel: 43-7242-2244-39 Fax: 43-7242-2244-393 **Denmark - Copenhagen** Tel: 45-4450-2828 Fax: 45-4485-2829 **Finland - Espoo** Tel: 358-9-4520-820 **France - Paris** Tel: 33-1-69-53-63-20 Fax: 33-1-69-30-90-79 **Germany - Garching** Tel: 49-8931-9700 **Germany - Haan** Tel: 49-2129-3766400 **Germany - Heilbronn** Tel: 49-7131-72400 **Germany - Karlsruhe** Tel: 49-721-625370 **Germany - Munich** Tel: 49-89-627-144-0 Fax: 49-89-627-144-44 **Germany - Rosenheim** Tel: 49-8031-354-560 **Israel - Ra'anana** Tel: 972-9-744-7705 **Italy - Milan** Tel: 39-0331-742611 Fax: 39-0331-466781 **Italy - Padova** Tel: 39-049-7625286 **Netherlands - Drunen** Tel: 31-416-690399 Fax: 31-416-690340 **Norway - Trondheim** Tel: 47-72884388 **Poland - Warsaw** Tel: 48-22-3325737 **Romania - Bucharest** Tel: 40-21-407-87-50 **Spain - Madrid** Tel: 34-91-708-08-90 Fax: 34-91-708-08-91 **Sweden - Gothenberg** Tel: 46-31-704-60-40 **Sweden - Stockholm** Tel: 46-8-5090-4654 **UK - Wokingham** Tel: 44-118-921-5800 Fax: 44-118-921-5820