PNEUMATIC ACTUATOR TECHNOLOGY

Pneumatic Actuators

In its basic form, a pneumatic actuator is a device which translates the energy from a compressed air supply into a linear or rotary movement. In essence, actuators generally represent the business end of any pneumatic system, providing the means by which specific tasks such as clamping, picking and placing, filling, ejecting and tool changing - are carried out.

In the early days of pneumatics technology the only actuators commonly available were cylinders that provided a simple linear movement from a conventional and relatively bulky barrel and piston rod assembly. Rapid changes in market requirements and a demand for smaller but more powerful and efficient devices has, however, led to the introduction of a wide range of actuators. Today, the actuator product group includes single and double acting cylinders, single and twin rod slide units, rotary actuators (both vane and rack and pinion), hollow rod cylinders, grippers and compact cylinders, locking head and multi-positional cylinders, capable of providing a combination of rotary and linear motion.

As the range and scope of pneumatic actuators has increased so too has their sophistication and performance, making it harder to specify devices for different tasks. There are, however, a number of criteria that all actuators should meet, over and above those expected of all modern industrial equipment, such as long term reliability and minimal

maintenance. Depending on the application, these include:
1) Low break away force (stiction)
2) Minimum friction between the piston and barrel
3) Fast acceleration and deceleration
4) Accurate and repeatable positioning (especially in pick and place systems)
5) Maximum efficiency
6) Smooth operation

Note: For a detailed explanation on sizing linear acting cylinders refer to chapter 1, “Sizing Pneumatic Valves and Cylinders.”

The following diagram shows the various components typically found within a standard double acting linear actuator.

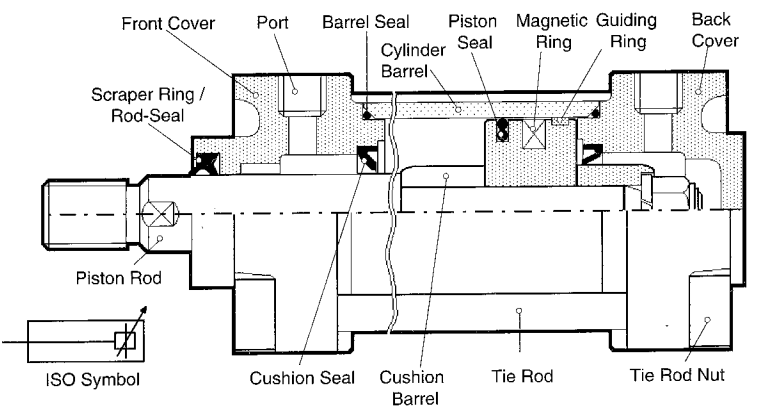

The scraper ring/rod seal is designed to prevent debris on the piston rod from entering the actuator, while the magnetic ring on the piston assembly is used to operate externally mounted auto switches, to show the position of the piston. Perhaps the most important component, however, is the piston seal, as its design can have a considerable impact on the efficiency with which the actuator operates.

The Importance of the Piston Seal

Conventional linear actuators generally incorporate two lip seals, mounted back to back and separated by a wear strip. Although this arrangement provides an effective seal between the piston rod assembly and the cylinder body it has a number of inherent drawbacks.

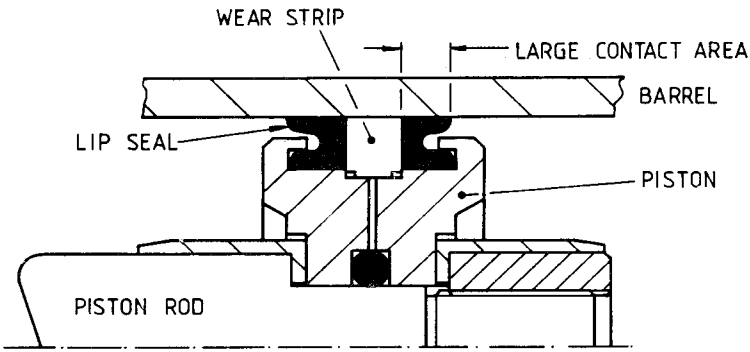

The large area of the lip seal, in contact with the cylinder barrel, that is acted upon by the applied air pressure, reduces the effective thrust of the piston and increases the operating pressure necessary to start the piston moving; it also inhibits smooth operation at slow speeds.

This type of seal design can reduce both cylinder efficiency, by as much as 25%, and the life of the seal itself.

The movement of the lip seals along the barrel also tends to scrape away the vital lubricating materials used to protect the cylinder, so that they collect at either end of the bore. Over time, this can result in the premature failure of the seals, causing air losses and energy consumption to escalate.

To address these problems, SMC has developed a low friction seal, which is now standard on most SMC linear actuators.

In simple terms, the seal fits within a recess in the piston rod and comprises a specially moulded, single piece, waisted oval rubber element. This has a small contact area, to reduce frictional losses to a minimum, and ensures a single point of contact with the cylinder barrel, regardless of the air pressure. As the cylinder reciprocates, the seal flexes about the central waist, causing the actual point of contact to occur across the face of the seal, thereby considerably reducing the amount of wear. The flexing action has the added benefit of gradually redistributing lubricating oils evenly along the inside face of the barrel.

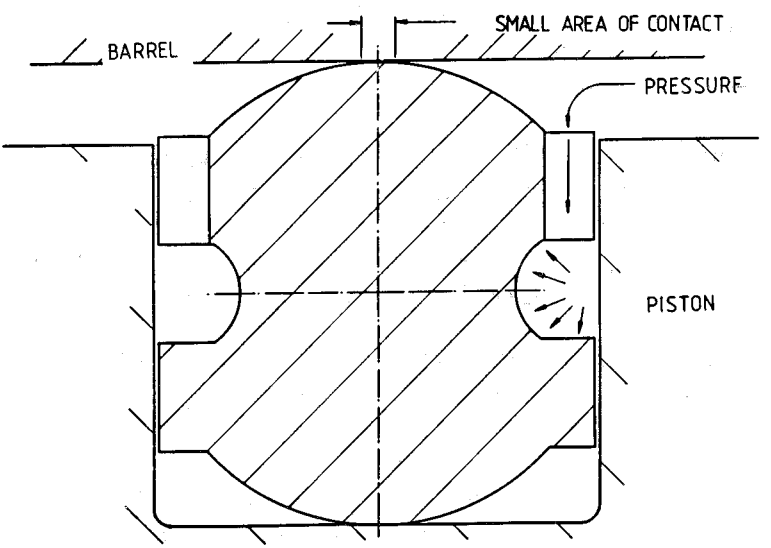

The dramatically reduced level of friction means that the pressure required to overcome the break-away force diminishes from the usual 15 psi to under 5 psi, providing smooth start up and operation, while the problems of 'stick-slip', often encountered with other types of cylinder running at slow speeds, are virtually eliminated.

The Construction of Linear Actuators

Traditionally, linear actuators have been constructed from a seamless tube or barrel, sealed at either end with end-caps manufactured from alloy or iron castings and held in place by longitudinal tie rods or screwed or crimped to the barrel. Although this method of construction will probably continue for the foreseeable future, it is being supplemented by other production techniques, most notably the use of high pressure extrusion, pioneered by SMC, for the manufacture of a one piece cylinder barrel, extruded from an aluminium slug. This produces a simple, low cost cylinder, with a minimum number of components.

Traditionally manufactured cylinder barrels are generally produced from aluminium, stainless steel, brass or bronze and should be coated and finished so that friction and wear on the internal components is reduced to a minimum. The internal surfaces are lubricated for life, removing the need for the separate lubrication units, previously required in pneumatics systems.

Similarly, the piston rod should either be chromium plated or, for more demanding applications, manufactured from stainless steel, to give a tough, hard wearing component.

Accurate positioning of the piston rod during cylinder operation depends on a number of factors, including the type of cylinder seal that is used and the ability of the piston to withstand side loads. This is primarily achieved by the use of specially strengthened components, including hardened internal faces on cylinder barrels, and by incorporating a series of bushes and/or bearings within the body of the cylinder, to prevent the rod being deflected as it extends. Although piston rod deflection will vary, depending on the size and design of each actuator, it should typically be within +0.5° at maximum

extension; actuators that fall outside this tolerance band provide poor positional accuracy and are likely to suffer from increased wear of the piston seals.

Piston acceleration can be controlled by the use of a flow control valve, enabling control of the exhaust air; while deceleration, especially from high speeds, can be achieved by the use of internal or external rubber bumpers or shock absorbers. An internal air cushion can also be incorporated, which provides an adjustable and highly accurate method of bringing the piston to a halt. The cushion is formed by trapping, and then gradually venting, a pocket of exhaust air between the piston and the end of the cylinder.

Special Purpose Actuators

In recent years the range and operating performance of pneumatic actuators has expanded considerably, matching the growth in the market for robotics and automation systems. As a result, it is now possible to find an actuator or a combination of actuators, to meet the needs of almost every application. Listed below are just some of the types commonly available; if you would like to discuss a specific requirement please contact your local SMC regional centre.

Rotary Actuators

There are two principal types of rotary actuator: rack and pinion or vane. In the first, a linear piston movement is translated into a rotary action by means of a rack and pinion arrangement, giving a maximum rotation of 190°, while the second type uses specially shaped vanes, driven by air pressure, to turn an output shaft.

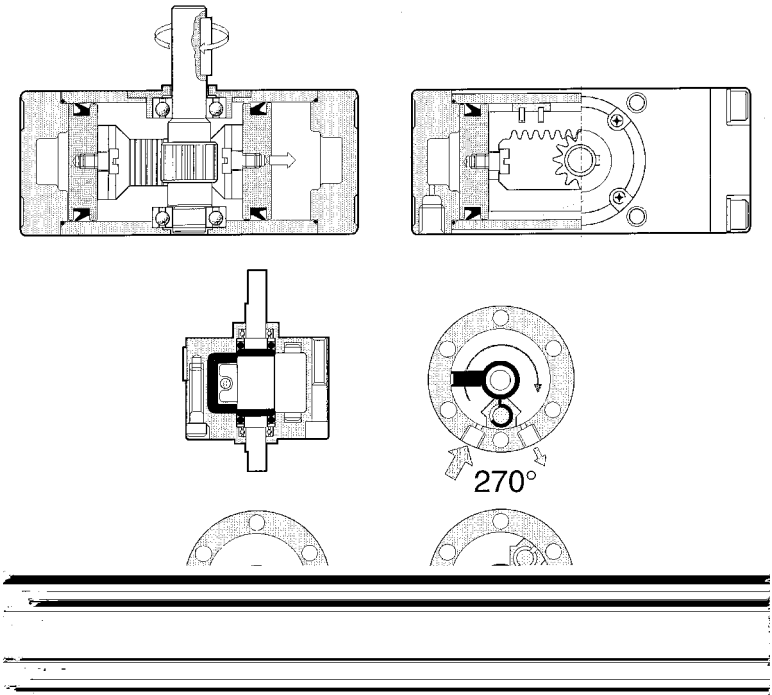

Typical applications for these actuators are pick and place systems, where a high level of positional accuracy is required.

Rodless Cylinders

In a number of applications, especially where space is limited or where extreme piston rod extension is required, a conventional linear actuator is impractical because of the combined length of the piston rod and cylinder body at full extension. Rodless cylinders were developed to overcome this problem and feature a carriage mounted directly above the piston rod, enabling maximum use to be made of full piston travel. A conventional cylinder with a stroke of 500mm, for example, will typically require a dimensional length of 1100mm for installation, while a rodless cylinder with a similar stroke requires only 600mm.

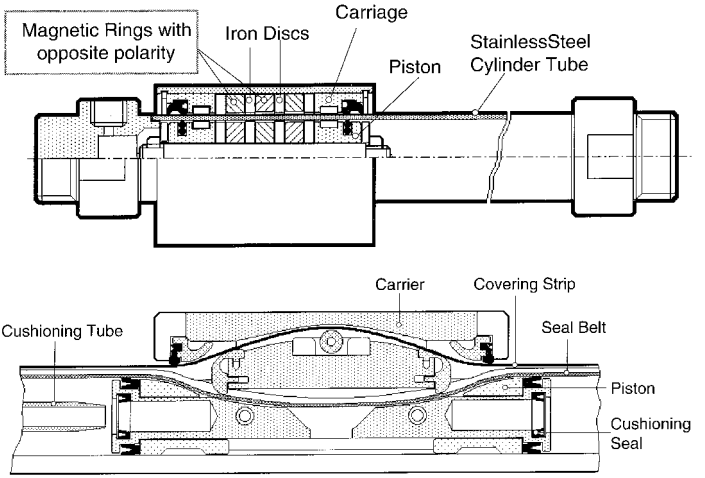

The carriage can be connected to the piston, either magnetically or mechanically. In the first instance a series of powerful neodymium ferrous boron magnets are fitted both to the rod and the carriage; in the second system a mechanical coupling, mounted through the cylinder barrel in a sliding seal is used.

The main advantage of the magnetic rodless cylinder is its ability to provide controlled movement at relatively high speeds. Unlike the mechanical system, there is no opening in the barrel, so air leakage and the risk of dirt entering the cylinder are eliminated. Its one limitation is the restriction of the loads it can carry; heavy duty applications, therefore, require the use of mechanically coupled rodless cylinders.

Slide Units

In essence, slide units are precision linear actuators, but with a twin piston rod arrangement to eliminate piston rotation and increase the output force. Designed for use on automation systems, especially where components need to be moved or positioned, they can be used to replace traditional multi-component actuator/guide rod assemblies.

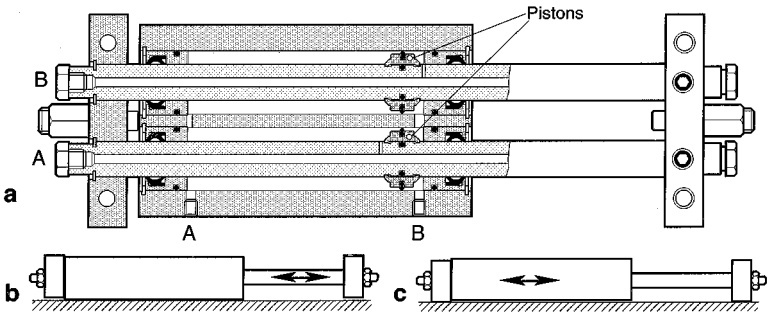

Pin or Needle Cylinders

Pin or needle cylinders are miniaturised devices, capable of providing linear movement in confined spaces in applications such as the electronics industry, where small components need to be moved quickly from process to process, or be clamped, rotated or ejected.

Pin cylinders are compact devices, typically measuring a few centimetres in length, with bore sizes under 15mm.

Combination Cylinders

Designed primarily for use in pick and place production systems, combination cylinders provide multi-positional movement in a single device; for example linear, rotary and gripping actions.

Typically, a combination cylinder incorporates a rotary action, controlled by a rack and pinion, plus a double action linear movement; these can be carried out sequentially or concurrently, to create an oscillating motion. In each case, piston speed and rotation can be determined accurately by adjustable exhaust valve throttles, while positioning can be indicated using externally mounted auto switches, activated by magnets set within the piston and rack and pinion assemblies. In addition, the piston rod can be drilled longitudinally, to enable a vacuum to be applied to end effects connected to the tip.