THIS DRAWING IS UNPUBLISHED. RELEASED FOR PUBLICATION -,- .
© COPYRIGHT - BY TYCO ELECTRONICS CORPORATION. ALL RIGHTS RESERVED.

LOC	DIST
ES	00

REVISIONS

P	LTR	DESCRIPTION	DATE	DWN	APVD
	0	RELEASED PER EC FB00-0249-04	5NOV04	L.Z	I.E

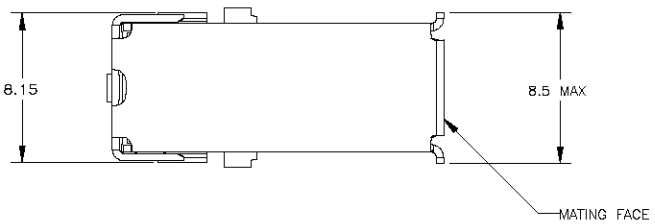

1. CONTACTS: BRASS; SHELL: PHOS BRONZE; INSERT: LCP, BLACK, UL 94V-0 RATED.
2. CONTACTS: (0.076μm MIN GOLD OVER 0.76μm MIN PALLADIUM-NICKEL) OR (0.76μm MIN GOLD) FOR A LENGTH OF 2 MIN ON MATING FACE END, 3.81μm MIN TIN FOR A LENGTH OF 3.75 MIN ON OPPOSITE END, ALL OVER 1.27μm MIN NICKEL; SHELL: 2~5μm MIN TIN.
3. COORDINATE DIMENSION APPLIES FROM CENTER OF ACTUAL FEATURE.
4. CONNECTOR SIDE OF PWB IS SHOWN.

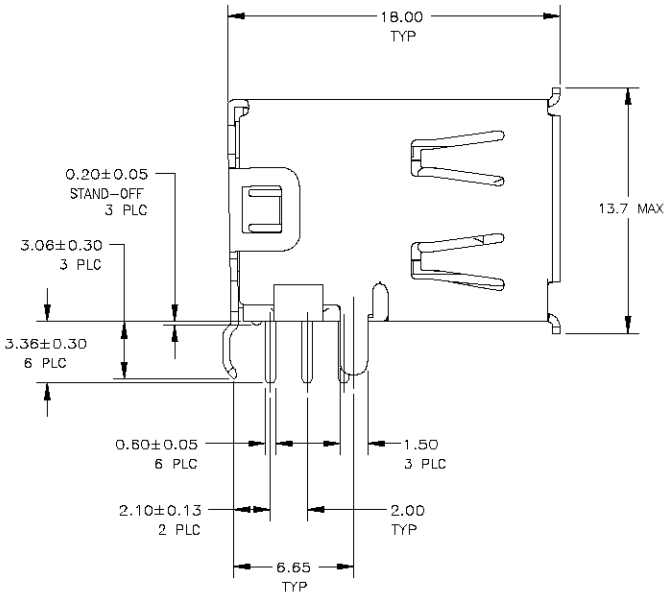

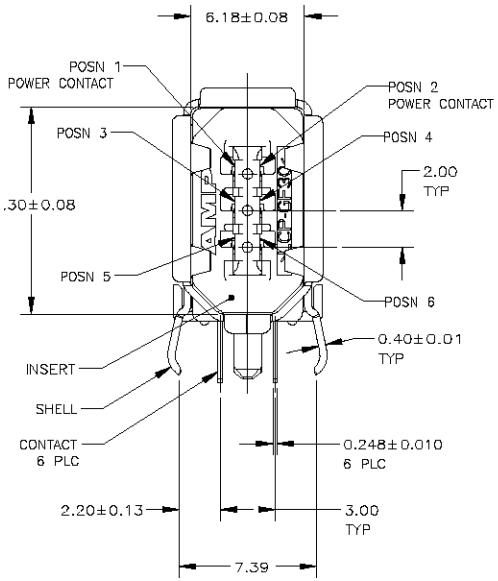

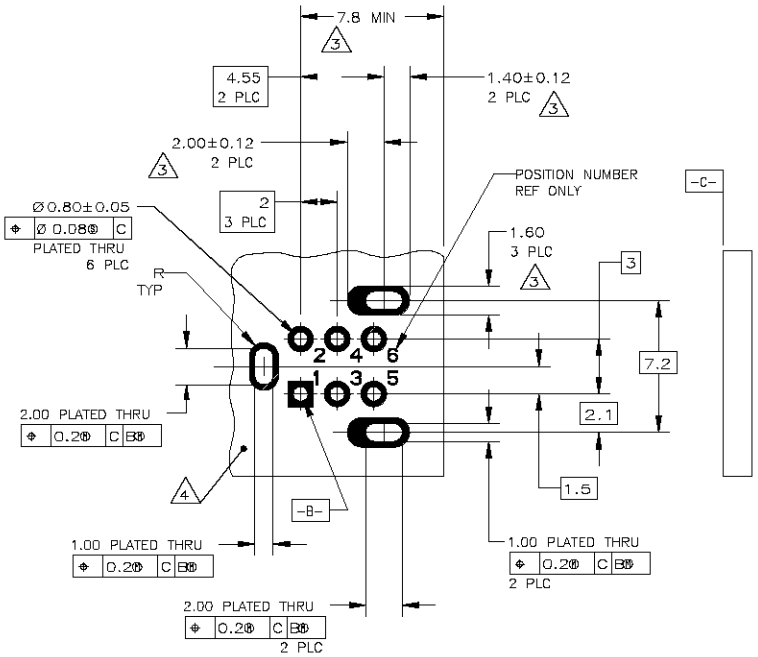

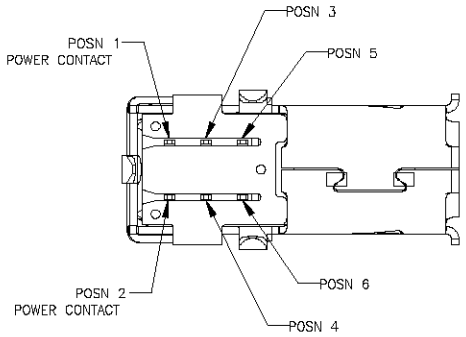

LEAD FREE

IN TRAYS	5787956-1
PACKAGING	PART NO

THIS DRAWING IS A CONTROLLED DOCUMENT.

DIMENSIONS: mm

TOLERANCES UNLESS OTHERWISE SPECIFIED:
0 PLC ± -
1 PLC ± -
2 PLC ± -
3 PLC ± -
4 PLC ± -
ANGLES ± -

MATERIAL - 1

FINISH - 2

DWN LEO ZHOU 05NOV04
CHK STEVEN YAO 05NOV04
APVD I.ENOMOTO 05NOV04
PRODUCT SPEC —
APPLICATION SPEC —
WEIGHT —

tyco Electronics

Tyco Electronics Corporation
SH/CN GuiPingRD 668#

NAME
SOCKET ASSEMBLY, FLANGED,
RIGHT-ANGLE UPRIGHT, IEEE P1394
—

SIZE	CAGE CODE	DRAWING NO	RESTRICTED TO
A2	00779	C-5787956	—

CUSTOMER DRAWING

SCALE 5:1 SHEET 1 OF 1 REV 0

AMP 1471-9 REV 31MAR2000

F:\All Guys\Leo zhou\B057707\787956\C 5787956_0.dwg