HARDWARE: Zinc Die Cast Guide Pins

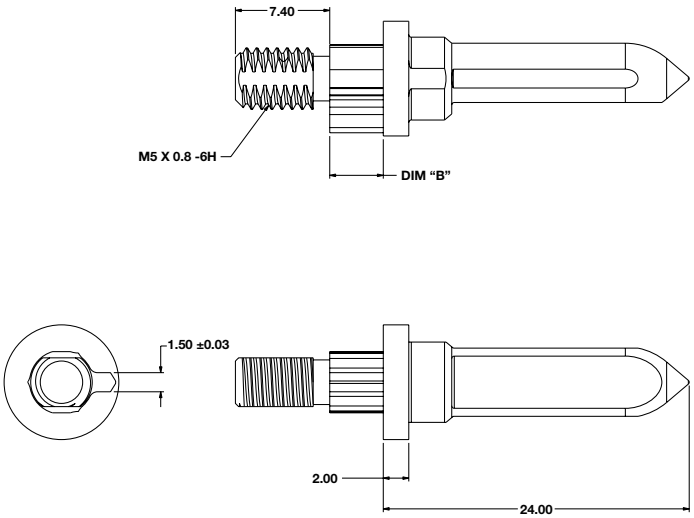

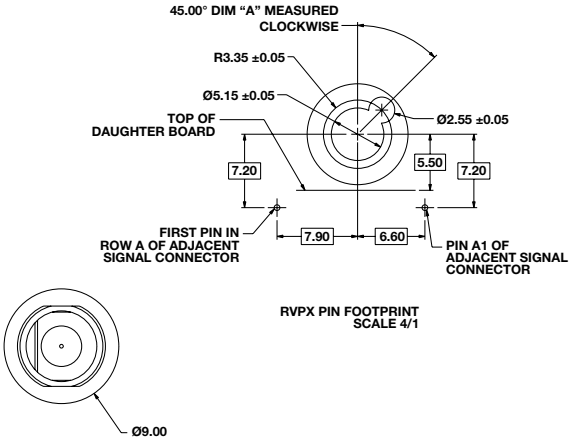

RVPX PIN FOOTPRINT
SCALE 4/1

ZINC DIE CAST GUIDE PINS	
Part Number	DIM. B
RVPX-HPD-2	2.60
RVPX-HPD-3	4.20
RVPX-HPD-4	5.70

Cat Brandas • Office: +1 (607) 563-5129 • Mobile: +1 (607) 643-5071 • Email: cbrandas@amphenol-aao.com
amphenol-aerospace.com • amphenolmao.com