# Product datasheet
## Characteristics

# RXG22B7PV
Interface plug-in relay pre-assembled, 5 A, 2 CO, lockable test button, LED, protection module, 24 V AC



## Main

| | |
|---|---|
| Range of product | Harmony Relay |
| Series name | Interface relay |
| Product or component type | Plug-in relay |
| Device short name | RXG |
| Contacts type and composition | 2 C/O |

## Complementary

| | |
|---|---|
| Status LED | With |
| Contacts material | Silver alloy (AgSnO2In2O3) |
| Maximum contact resistance | 100 mOhm |
| [Ithe] conventional enclosed thermal current | 5 A |
| [Ie] rated operational current | 5 A at 30 V (DC) conforming to UL<br>5 A at 30 V (DC) conforming to IEC<br>5 A at 250 V (AC) conforming to IEC<br>5 A at 250 V (AC) conforming to UL |
| Maximum switching voltage | 250 V |
| Load current | 5 A |
| Maximum switching capacity | 1250 VA AC<br>150 W DC |
| Minimum switching capacity | 50 mW at 10 mA, 5 V DC |
| Operating rate | <= 1800 cycles/hour under load<br><= 18000 cycles/hour no-load |
| Utilisation coefficient | 20 % |
| Mechanical durability | 10000000 cycles |
| Electrical durability | 100000 cycles resistive load |
| [Ui] rated insulation voltage | 250 V conforming to IEC |

Disclaimer: This documentation is not intended as a substitute for and is not to be used for determining suitability or reliability of these products for specific user applications

| | |
|---|---|
| [Uimp] rated impulse withstand voltage | 6 kV 1.2/50 µs between coil and contact<br>4 kV 1.2/50 µs between poles<br>1.2 kV 1.2/50 µs between contacts<br>2.5 kV 1.2/50 µs between terminals and LTB area<br>1.5 kV 1.2/50 µs between terminals and base |
| Dielectric strength | 1000 V AC between contacts with micro disconnection<br>1300 V between terminals and base with basic insulation<br>3000 V between terminals and LTB area with basic insulation<br>3000 V AC between poles with basic insulation<br>5000 V AC between coil and contact with reinforced insulation |
| Coil resistance | 260 Ohm +/- 10 % |
| Insulation resistance | 1000 MOhm at 500 V DC |
| Test levels | Level A group mounting |
| Mounting position | Any position |
| Average coil consumption | 0.70 VA AC 50...60 Hz |
| Drop-out voltage threshold | >= 0.3 Uc AC |
| Coil insulation class | Class F |
| Operate time | 20 ms |
| Release time | 20 ms |
| [Uc] control circuit voltage | 24 V AC |
| Safety reliability data | B10d = 100000 |
| Colour of cover | Transparent |
| Control type | Lockable test button |
| Torque value | 0.8 N.m<br>0.79 N.m |
| Connections - terminals | Connector, 1 x 0.25...1 x 2.5 mm² (AWG 22...AWG 14) flexible with cable end<br>Connector, 2 x 0.25...2 x 1 mm² (AWG 22...AWG 17) flexible with cable end<br>Connector, 1 x 0.5...1 x 2.5 mm² (AWG 20...AWG 14) solid without cable end<br>Connector, 2 x 0.5...2 x 1.5 mm² (AWG 20...AWG 16) solid without cable end |
| Net weight | 0.065 kg |
| Device presentation | Complete product |

## Environment

| | |
|---|---|
| Vibration resistance | 3 gn, amplitude = +/- 1.5 mm (f = 10…150 Hz)in operation<br>5 gn, amplitude = +/- 1.5 mm (f = 10…150 Hz)not in operation |
| IP degree of protection | IP20 |
| Shock resistance | 20 gn in operation<br>100 gn not in operation |
| Protection category | RT I |
| Standards | IEC 61810-1<br>CSA C22.2 No 14<br>UL 508<br>IEC 61984 |
| Product certifications | EAC<br>REACH<br>RoHS<br>CSA<br>UL<br>CE<br>China RoHS |
| Pollution degree | 2 |
| Overvoltage category | III |
| Ambient air temperature for storage | -40…85 °C |
| Ambient air temperature for operation | -40…70 °C |
| Relative humidity | 10…85 % |

## Packing Units

| | |
|---|---|
| Package 1 Weight | 67.000 g |
| Package 1 Height | 79.600 mm |

| | |
|---|---|
| Package 1 width | 15.600 mm |
| Package 1 Length | 72.000 mm |

## Offer Sustainability

| | |
|---|---|
| Sustainable offer status | Green Premium product |
| REACh free of SVHC | Yes |
| EU RoHS Directive | Pro-active compliance (Product out of EU RoHS legal scope)<br>EU RoHS Declaration |
| Toxic heavy metal free | Yes |
| Mercury free | Yes |
| RoHS exemption information | Yes |
| China RoHS Regulation | China RoHS declaration |
| Environmental Disclosure | Product Environmental Profile |
| WEEE | The product must be disposed on European Union markets following specific waste collection and never end up in rubbish bins |

## Contractual warranty

| | |
|---|---|
| Warranty | 18 months |

# RXG22B7PV

## Dimensions

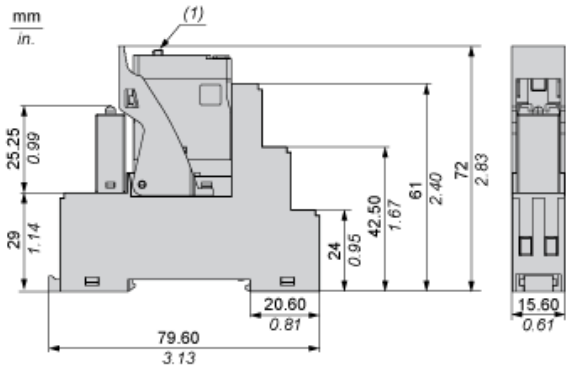


(1) Push button (if any)

# RXG22B7PV

## Wiring Diagram

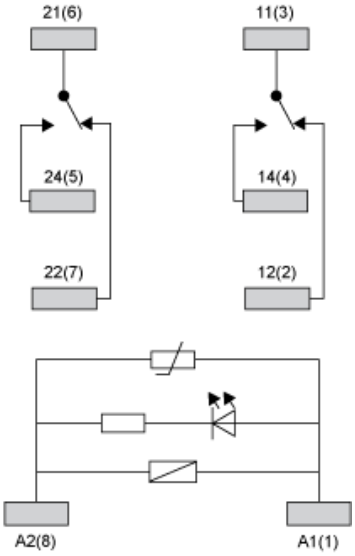

## Performance Curves

### Maximum Switching Capacity

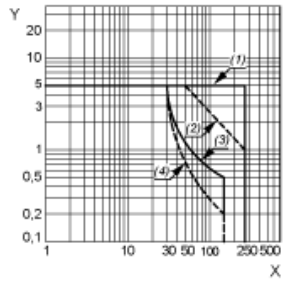


X : Switching voltage (V)
Y : Switching current (A)
(1) AC Resistive Load
(2) AC Inductive Load cos(Ø)=0.4
(3) DC Resistive Load
(4) DC Inductive Load (L/R=7ms)

### Life Expectancy

Resistive Load

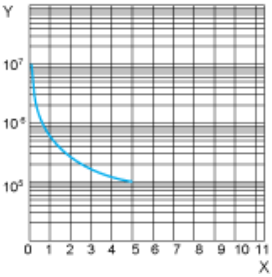


X : Contact Current (A)
Y : Operating Cycle Number

### Life Expectancy

Inductive Load

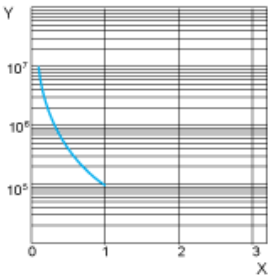


X : Contact Current (A)
Y : Operating Cycle Number

NOTE: These are typical curves, actual durability depends on load, environment, duty cycle, etc.

# RXG22B7PV

## Coil Operating Range

### AC Coil Operating Range VS Ambient Temperature

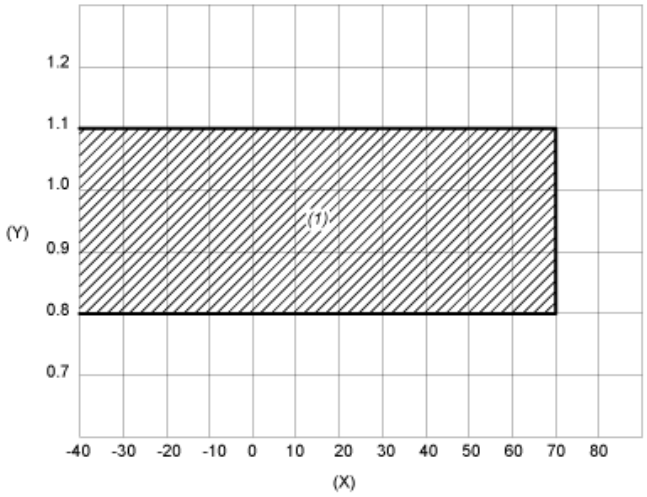


X : Ambient temperature (°C)
Y : Coil voltage (U/Uc)
(1) Permitted operating range area