CPC # SW04827

SUPPLIER # RJS1N1S-19-B-BS-67J

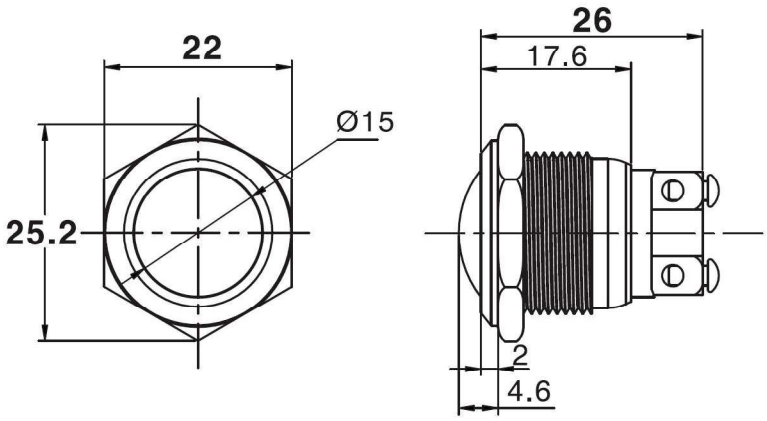

CPC # SW04828

SUPPLIER # RJS1N1S-19-F-BS-67J

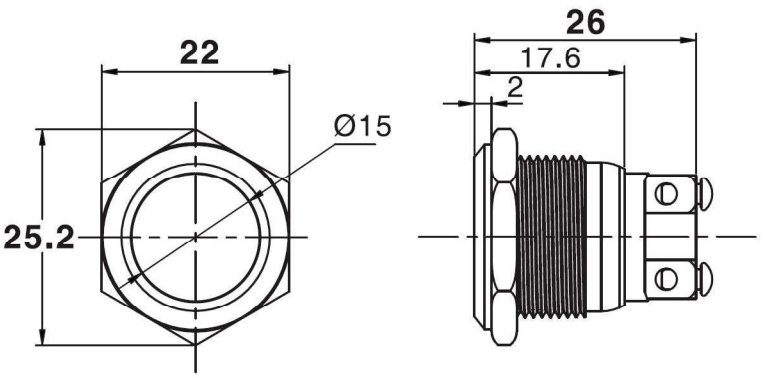

Switch Specifications	
Panel Cut Out Diameter	19mm
Panel Thickness	1-10mm
Switch Function	Momentary
Circuit	1NO
The Front Shape	Flat or Ball
Terminal Type	Screw Terminals
Max. Switch Rating	2A / DC 36V
Operating Distance	2-3mm
Operating Temperature	--
Mechanical Life	1,000,000 Cycles
Electrical Life	100,000 Cycles
IP Rating	IP67