Backshell D-Sub Connector

pro-POWER

RoHS Compliant

Specifications

Accessory Type	: Hood
For Use With	: D Sub Connectors
Connector Shell Size	: 25 Way
Cable Exit Angle	: 180°
Connector Body Material	: Plastic Body

Diagram

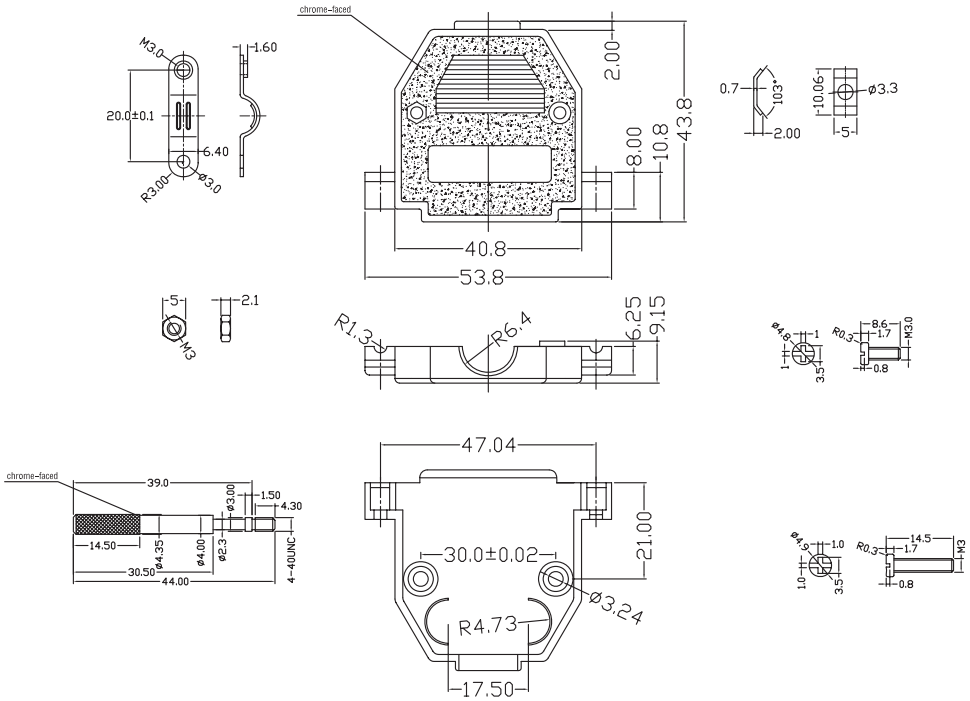

Part Number Table

Description	Part Number
Connector Backshell, Hood, D Sub Connectors, 25 way, 180°	SH158-25CCT

Dimensions : Millimetres

Important Notice : This data sheet and its contents (the "Information") belong to the members of the AVNET group of companies (the "Group") or are licensed to it. No licence is granted for the use of it other than for information purposes in connection with the products to which it relates. No licence of any intellectual property rights is granted. The Information is subject to change without notice and replaces all data sheets previously supplied. The Information supplied is believed to be accurate but the Group assumes no responsibility for its accuracy or completeness, any error in or omission from it or for any use made of it. Users of this data sheet should check for themselves the Information and the suitability of the products for their purpose and not make any assumptions based on information included or omitted. Liability for loss or damage resulting from any reliance on the Information or use of it (including liability resulting from negligence or where the Group was aware of the possibility of such loss or damage arising) is excluded. This will not operate to limit or restrict the Group's liability for death or personal injury resulting from its negligence. pro-POWER is the registered trademark of Premier Farnell Limited 2019.