Fan Kit

multicomp PRO

RoHS Compliant

120mm AC Fan, Fan Filter Assembly, 72” Power Cord

MC36451 - Axial Fan

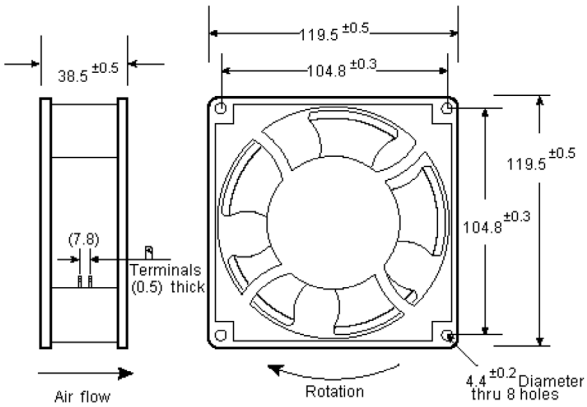

Specifications

Dimension	: 120mm × 120mm × 38mm
Rated Voltage	: 220V AC 50 / 60 Hz
Operating Voltage	: 200 to 240V AC
Air flow	: 80 CFM
Noise level	: 34 dBA
UL : E175395	

MC32661 - Fan Filter Assembly

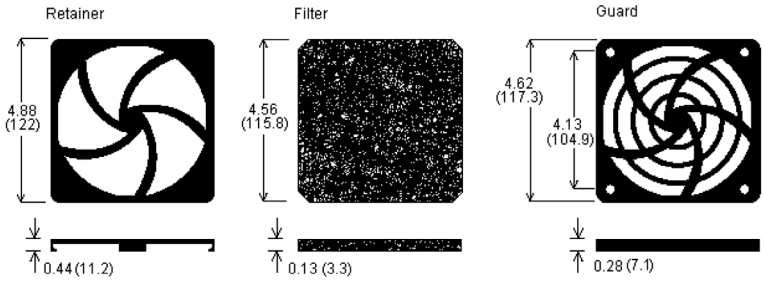

Specifications

Material	: Plastic UL94V-0
Media	: Polyurethane foam UL94HF-1 45PPI

Dimensions : Inches (Millimetres)

MC33049 - 45° Plug, Power Cord

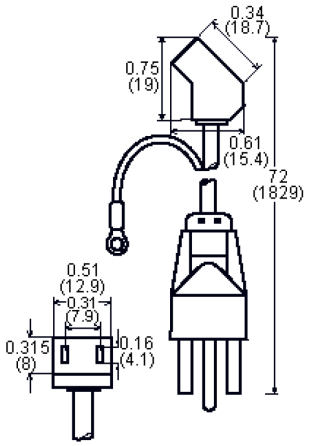

Specifications

Wire	: SPT1 105°C, 300 volts, black
Plug	: NEMA 6-15P, #8 ring terminal
Length	: 72 inches (1829mm)
UL : E348035, E345335	

Part Number Table

Description	Part Number
Fan Kit	MC36434
120mm AC Axial Fan	MC36451
Fan Filter Assembly, PU (Polyurethane) Foam	MC32661
45° Angle Plug, Power Cord, 72″	MC33049

Dimensions : Inches (Millimetres)

Important Notice : This data sheet and its contents (the “Information”) belong to the members of the AVNET group of companies (the “Group”) or are licensed to it. No licence is granted for the use of it other than for information purposes in connection with the products to which it relates. No licence of any intellectual property rights is granted. The Information is subject to change without notice and replaces all data sheets previously supplied. The Information supplied is believed to be accurate but the Group assumes no responsibility for its accuracy or completeness, any error in or omission from it or for any use made of it. Users of this data sheet should check for themselves the Information and the suitability of the products for their purpose and not make any assumptions based on information included or omitted. Liability for loss or damage resulting from any reliance on the Information or use of it (including liability resulting from negligence or where the Group was aware of the possibility of such loss or damage arising) is excluded. This will not operate to limit or restrict the Group’s liability for death or personal injury resulting from its negligence. Multicomp Pro is the registered trademark of Premier Farnell Limited 2019.